perixx

PERIMICE-508/608

User's Guide

VALUE CREATOR

---

perixx

Perixx's warranty obligations are limited to the terms set forth below. Perixx warrants this hardware product against defects in materials and workmanship for a period of one (1) year from the date the original invoice.

If you discover a defect, Perixx will either repair or replace the product free of charge. Please contact Perixx for a Return Merchandise Authorization number (RMA) prior to returning any product. For each product returned for warranty service, please include your name, shipping address (no P.O. Box), telephone number, copy of the bill of sale as proof of purchase and make sure that the package is clearly marked with your RMA number.

THE WARRANTY AND REMEDIES SET FORTH ABOVE ARE EXCLUSIVE AND IN LIEU OF ALL OTHERS, WHETHER WRITTEN, ORAL, EXPRESS OR IMPLIED. PERIXX SPECIFICALLY DISCLAIMS ANY AND ALL IMPLIED WARRANTIES, INCLUDING AND WITHOUT LIMITATION, WARRANTIES OF MERCHANTABILITY AND FITNESS FOR A PARTICULAR PURPOSE. NO PERIXX DEALER, AGENT, OR EMPLOYEE IS AUTHORIZED TO MAKE ANY MODIFICATION, EXTENTION OR ADDITION TO THIS WARRANTY. PERIXX IS NOT RESPONSIBLE FOR SPECIAL, INCIDENTAL OR CONSEQUENTIAL DAMAGES RESULTING FROM ANY BREACH OF WARRANTY, OR UNDER ANY LEGAL THEORY, INCLUDING BUT NOT LIMITED TO LOST PROFITS, DOWNTIME, GOODWILL, DAMAGE TO OR REPLACEMENT OF EQUIPMENT OR PROPERTY AND ANY COST OF RECOVERING, REPROGRAMMING OR REPLRODUCING ANY PROGRAM OR DATA STORED IN OR USED WITH PERIXX PRODUCTS. PERIXX'S MAXIMUM LIABILITY FOR ANY AND ALL DAMAGES ARISING OUT OF USE OF THE PRODUCT SHALL BE LIMITED TO THE AMOUNTS PAID BY PURCHASER FOR SUCH PRODUCT.

---

perixx

Caution

- The manufacturer and re-resellers are not responsible for any malfunctions, damage, or personal injury incurred by:
  - ▸A misuse of the product
  - ▸Any attempt to dismantle, change or modify the product in any manner
- You are cautioned that changes or modifications not expressly approved by the party responsible for the compliance could void your authority to operat the equipment.
- Mandatory repair charges are required for the following conditions, within the guarantee period:
  - ▸Malfunction or damage is due to misuse or improper alteration or repair.
  - ▸Malfunction or damage caused by the falling after the purchase.
  - ▸Malfunction or damage is caused by a fire, salt, gas, earthquake, lighting, wind, water, or other natural calamities, or abnormal voltage.
  - ▸Malfunction or damage is caused by other devices connected to the keyboard.
- All brand names, trademarks and logos are the properties of their respective owners.

Please Note:
Long-term repetitive use of any product could cause injury to user. Perixx recommends users avoid excessive use of this or any keyboard.

Product Illustration

PERIMICE-508: Wired Version

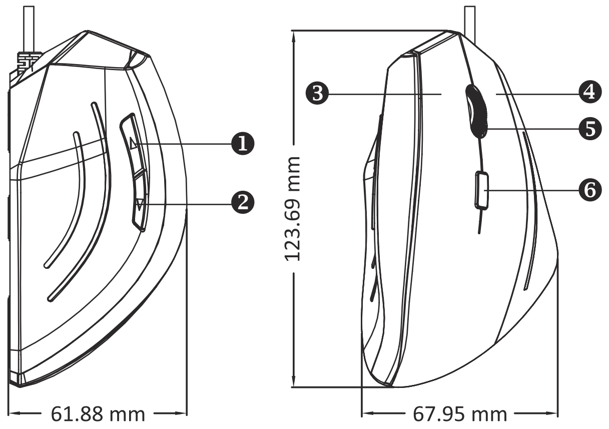

❶ **Forward:**
In a browser window, displays the last page that you visited before you clicked theBack button

❷ **Back:**
In a browser window, displays the last page that you visited.

❸ **Left Click**

❹ **Right Click**

❺ **Wheel:**
In a scrollable window, rotate the wheel towards you to move down, away from --- you to move up.

❻ **DPI Switch:**
adjust DPI Level to 1000or 1600

PERIMICE-608: Wireless Version

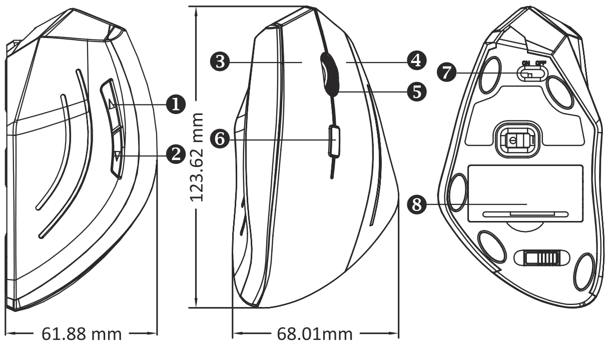

❶ **Forward:**
In a browser window, displays the last page that you visited before you clicked the Back button

❷ **Back:**
In a browser window, displays the last page that you visited.

❸ **Left Click**

❹ **Right Click**

❺ **Wheel:**
In a scrollable window, rotate the wheel towards you to move down, away from--- you to move up.

❻ **DPI Switch:**
adjust DPI Level to be 1000or 1600

❼ **Power On/Off Switch**
(Wireless version)

❽ **Battery Cover:**
2pcs *AAA battery(Wireless version)

Product specification

Model	PERIMICE-508/608
Color	Black or White
Interface	USB2.0/1.1
Size	123.69*67.95*61.88mm (Wired & Wireless Version)
	19.2*14.7*6.2mm (Receiver: Wireless version)
Weight	152g (Wired)
	126 g (Wireless)
Material	PC/ABS(Body)
	Rubber(Wheel)
	Receiver Body(ABS)
OS requirement	Win XP and above
Button	5 Buttons and 1 Scroll Wheel (Power Switch: Switching Power ON/OFF on mouse bottom)

Table of Content

ENGLISH 7
DEUTSCH 7
ESPAÑOL 8
FRANÇAIS 8
ITALIANO 9
日本語 9
简中 10
繁中 10

English(US/UK)

Thank you for purchasing this product from Perixx. This product has been designed to offer quick installation and operation. With Plug & Play feature, this device does not need a specific driver under Windows XP, Vista, 7, 8, 10.

System Requirements
- Operating System: Microsoft Windows ME/2000/XP/Vista/7/8/10
- 1 x Free USB Port

Deutsch (DE)

Vielen Dank das Sie sich für ein Produkt von Perixx entschieden haben. Dieses Produkt ist benutzerfreundlich und lässt sich sehr leicht installieren. Ausgestattet mit der Plug & Play Funktion, braucht dieses Produkt kein Treiber bei Windows XP, Vista, 7, 8,10.

System Voraussetzungen:
- Betriebssysteme: Microsoft Windows ME/2000/XP/Vista/7/8/10
- 1 x freier USB Port

ESPAÑOL (ES)

Gracias por adquirir este producto de Perixx. Este producto ha sido diseñado para permitirle una rápida instalación y funcionamiento. Con función Plug & Play, este dispositivo no precisa de controladores específicos con Windows XP, Vista, 7, 8, 10.

Requisitos del sistema
- Sistema operativo: Microsoft Windows ME/2000/XP/Vista/7/8/10
- 1 puerto USB libre

FRANÇAIS (FR)

Nous vous remercions d'avoir acheté ce produit Perixx. Sa conception facilite l'installation rapide et le fonctionnement aisé. Grâce à sa caractéristique Plug & Play, cet appareil ne nécessite aucun pilote spécifique sous Windows XP, Vista, 7, 8, 10.

Configuration requise
- Systèmes d'exploitation : Microsoft Windows ME/2000/XP/Vista/7/8/10
- 1 x Port USB libre

ITALIANO (IT)

Grazie per avere acquistato questo prodotto Perixx. Il prodotto è stato progettato per consentire rapidità di installazione ed uso. La funzione Plug & Play di questa periferica non necessita di un driver specifico con Windows XP, Vista, 7, 8, 10.

Requisiti di sistema
- Sistema operativo: Microsoft Windows ME/2000/XP/Vista/7/8/10
- 1 porta USB libera

日本語 (JA)

弊社(PERIXX)の製品を購入して頂きましてありがとうございます。本製品は簡易にインストール及び操作できるように設計されています。プラグ & プレイ機能のデバイスは WINDOWS XP, VISTA, 7, 8,10の環境に対応するため、ドライバをインストールすることは必要がありません。

対応OS・機種
-対応OS: Windows ME/2000/XP/Vista/7/8/10
-USBポート搭載PC

简体中文(SC)

感谢您购买Perixx的产品。 本产品的设计让使用者能快速完成安装及操作。支持即插即用的功能， 所以在Windows XP, Vista,7,8,10的操作系统中， 本产品不需任何额外的驱动程式。

系统需求
- 作业系统： 微软 Windows ME/2000/XP/Vista/7/8/10
- 1个USB接口

繁體中文(TC)

感謝您購買Perixx的產品。 本產品的設計讓使用者能快速完成安裝及操作。 支援即插即用的功能， 所以在Windows XP, Vista， 7， 8,10的作業系統中， 本產品不需任何額外的驅動程式。

系統需求
- 作業系統： 微軟 Windows ME/2000/XP/Vista/7/8/10
- 1個USB連接埠

VALUE
CREATOR