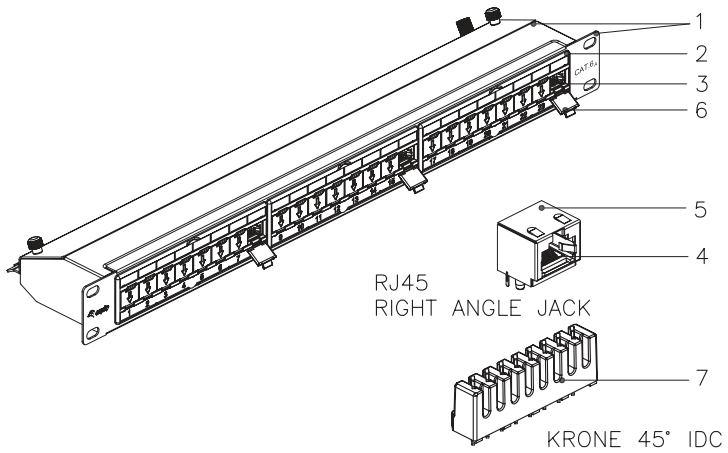

SCALE 1/5

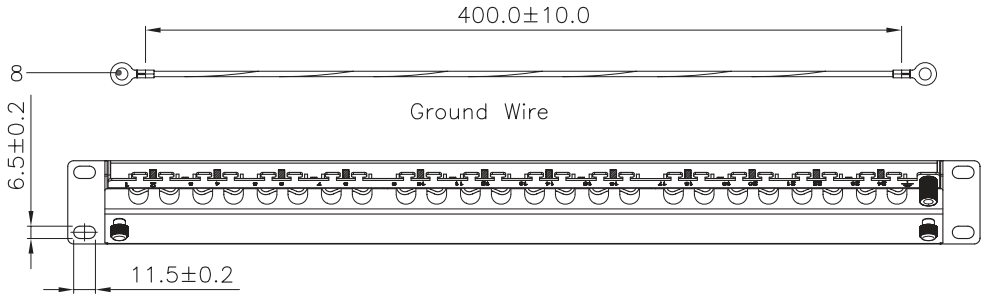

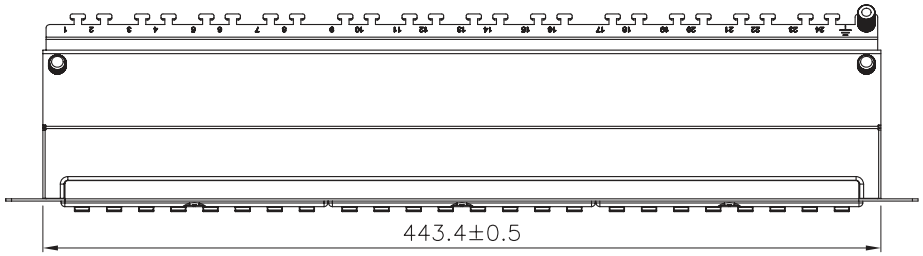

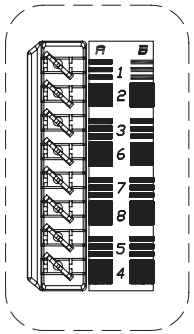

SCALE 1/1

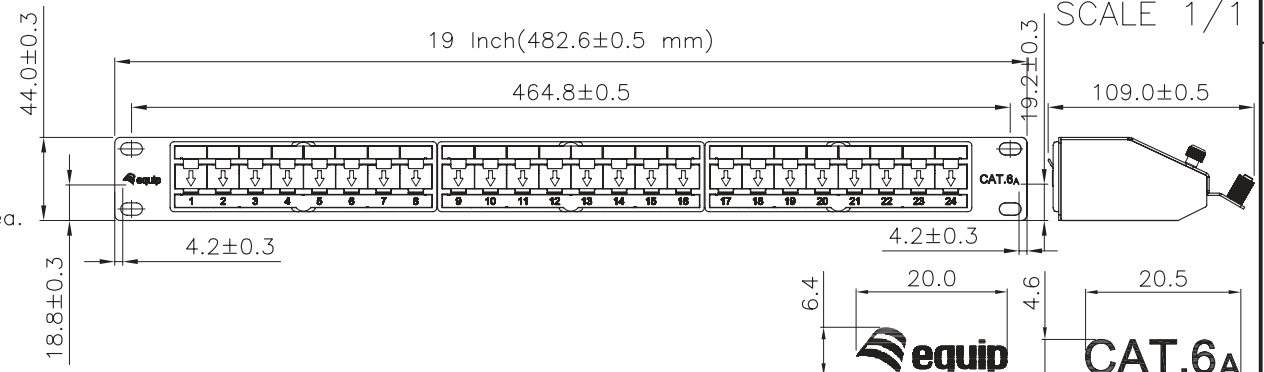

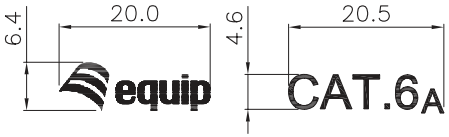

SCALE 1/1

Specification :

Material :
1. Panel : SECC, 1.2 mm thickness with optional color painted.
2. Identification :
   2−1. I.D. Plate : PVC, Transparent color.
   2−2. Paper.
   2−3. I.D. Bracket : ABS, UL 94V−0.
3. RJ45 Jack :
   3−1. Housing : PBT+Glass Fiber, UL 94V−0.
   3−2. Contact Bracket : PBT+Glass Fiber, UL 94V−0.
4. RJ45 Jack Contact :
   4−1. Material : Phosphor Bronze with Nickel plated.
   4−2. Finish : 50 micro−inch Gold plated on Plug contact area.
5. RJ45 Jack Shield : Bronze With Nickel plated.
6. Dust Cover : Polycarbonate, UL 94V−2.
7. IDC :
   7−1. Housing : PC+Glass Fiber, UL 94V−2.
   7−2. Terminal : Phosphor Bronze with Tin plated.
8. Ground Wire : 18 AWG Wire, with Green/Yellow striped color.
9. PCB : FR4, UL 94V−0.

Performance :
a. T568A & T568B wiring sticker on PCB.
b. Insertion force : 30N max. (IEC 60603−7−5)
c. Retention strength : 7.7 kg between Jack and Plug.
d. Operating temperature : −10°C to 60°C. (ISO/IEC 11801, ANSI/TIA/EIA568 B.2)
e. Life(mating cycles) :
   *Jack : 750 cycles min. (ISO/IEC 11801, IEC 60603−7−5)
   *IDC : Suitable for 22−26 AWG stranded and solid wire, Compatible with Krone punch down tool.
f. The CAT.6A channel transmission performance is in compliance with TIA/EIA 568C.2 10G & ISO/IEC 11801 standard.

Patch Panel color
Black(RAL9005), Gray(RAL7035).

GENERAL TOLERANCE OF DIMENSIONS X.XXX ±0.005 X.XX ±0.05 X.X ±0.1	DRAWING	16.DOV.2010	Connie	equip®
	CHECK	16.DOV.2010	Maer	
	APPROVAL	16.DOV.2010	Frank	
		DATE	NAME	ITEM NO.: 336524_336624
	SCALE 1/4(A4)	UNIT mm		DES.: CAT.6A FULL SHIELDED PATCH PANEL
	DRAWING NO.			
	DRAWING CLASSIFICATION	S	SHEET 1 OF 1	A2