LCD KVM SWITCH

Manual

DS-72210 • DS-72211 • DS-72212
DS-72213 • DS-72214 • DS-72216 • DS-72217

User Precautions

The manufacturer has the right to modify and alter the information, documentation and specifications contained in this manual without prior notice. Manufactures makes no warranty, express, implied or statutory, disclaims or specifically disclaims its possibility of sale and applicability for a particular purpose. The same applies to any sold and authorized manufacturer's software described in this manual. If the Software Program is found to be defective after purchase, the purchaser (and any non-manufacturer, its distributor or its purchaser) will be responsible for all necessary service, repair and any incidental or consequential damages resulting from the Software defect. The manufacturer is not responsible for any unauthorized interference with the radio or television caused by this equipment. The user must correct the interference personally. The manufacturer will not be liable for any damage resulting from incorrect selection of the operating voltage before operation.
Please be sure that the voltage has been set correctly before use.

A typical LCD (liquid crystal display) has millions of pixels. A dead pixel is a defective pixel that does not display the correct color. On the screen, it usually looks like a tiny black or white dot, which can also be any other color. In the manufacturing process, even if a pixel on the tiny dust particles, or in the course of a slight impact during transport, may have a dead pixel. In the ISO 13406-2 specification, four categories of acceptable screen dead pixels are defined: the first is the best product, and the fourth is the worst. Almost all manufacturers use the second level as a guarantee of the product, allowing a certain number of dead pixels exist, such as more than the tolerance will change the screen. Since the manufacturer is of the opinion that this screen is permitted by the ISO specification, we are not responsible for the replacement or warranty of the TFT LCD panel.

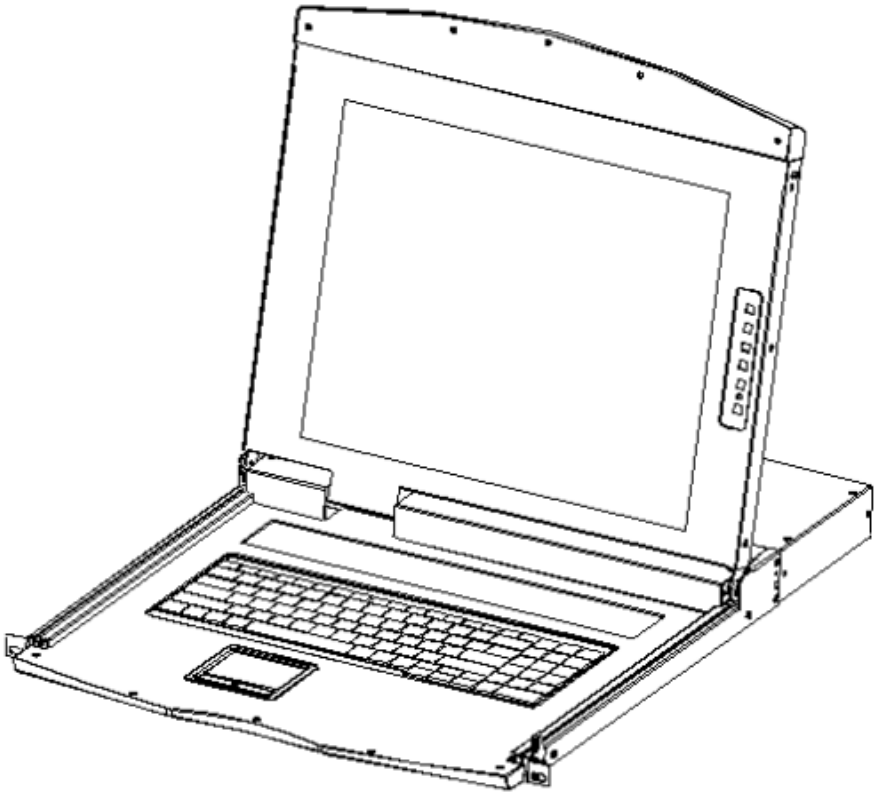

Product Model Description

	Configuration instructions
DS-72210	17 inch 4: 3 VGA LCD Console (LCD screen, keyboard and mouse), No KVM module
DS-72211	19 inch 16: 9 VGA LCD Console (LCD screen, keyboard and mouse), No KVM module
DS-72212	1 Port VGA KVM module cable
DS-72213	8 Port VGA KVM module with USB/PS/2 KVM cables
DS-72214	16 port VGA KVM module with USB/PS/2 KVM cables
DS-72216	8 port Cat5 KVM module with USB KVM dongles
DS-72217	16 port Cat5 KVM module with USB KVM dongles

Package Contents

The LCD Console package includes the following: (DS-72210/DS-72211)

- 1x LCD console
- 1x User manual
- 2x Mounting bracket
- 2x Lock ear
- 2x Install screws
- 1x Power adapter
- 1x power cable

The KVM module package includes the following:

Model Number	**DS-72212**	**DS-72213**	**DS-72214**	**DS-72216**	**DS-72217**
KVM module Type	**1 Port**	**8 Port**	**16 Port**	**8 Port**	**16 Port**
KVM USB/PS/2 Cable 1.8m	No	x 8pcs	x 16pcs	No	No
USB KVM Cat5 Dongle	No	No	No	x 8pcs	x 16pcs
Install screw	No	x 2pcs	x 2pcs	x 2pcs	x 2pcs
Quick Installation Guide	x 1pcs	x 1pcs	x 1pcs	x 1pcs	x 1pcs

Check that all parts are present and that they are not damaged in transit. If you encounter problems, contact your dealer.
To prevent damage to the machine or equipment connected to the machine, please read this manual carefully and follow the instructions to install and operate it.

Contents

User Precautions 2
Product Model Description 3
Package Contents 4
About this manual 7
Description of Terms 8
Chapter 1 9
Introduction 9
Product Introduction 9
Product Features 10
Hardware Requirements 11
KVM module 11
Computer 11
Cables 11
Over IP module (optional) 12
Operation System 12
Hardware Introduction 13
Front View 13
Rear View 14
KVM module 15
Front view of the 4: 3 screen and 16: 9 screen: 16
Overall Dimensions of the LCD KVM 17
Chapter 2 19
Hardware Installation 19
Single Port LCD KVM Cable (DS-72212) 20
KVM Module Installation (DS-72213, DS-72214) 21
CAT5 KVM Module Installation (DS-72216, DS-72217) 22
IP Module Installation (DS-51000-1) 23
Rack Mount INSTALLATION 25
Computer Device Installation 28
Cascade Device Connection 30
Disassembly of the Keyboard Module 32
Chapter3 34
Basic Operation 34
Hot Plug 34
Hot – Plug Computer Connection 34
Hot – Plug Console Port 34
Connection Port Selection 34
Switch the Selection Manually 35
Monitor OSD Menu Screen Selection 35
Hotkey Selection 36
Power Off and Restart 36
Open Way of LCD Screen 37

Chapter4 39
OSD Operation 39
OSD Introduction 39
OSD Log in 39
OSD Hot-Key 39
OSD Main Menu 40
OSD Main Screen Headings 40
OSD Function 41
F1 GOTO: 41
F2 SCAN: 42
F3 LIST: 42
F4 QV: 43
F5 EDIT: 43
F6 SET: 43
OSD ACTIVATING HOTKEY 45
SWITCH HOTKEY 45
SCAN DURATION 46
SET PASSWORD 46
SET SUPER PASSWORD 46
CLEAR THE NAME LIST 47
RESTORE DEFAULT VALUE 47
LOCK CONSOLE 47
Appendix 48
Safety Instruction 48
In General 48
Cabinet Installation 49
Specification 50
LCD Module Specifications 50
Warranty Conditions 52

About this manual

This User's Guide will assist you in the effective use of the product features, including the installation, setup and operation of the equipment. You will find the following in this manual:

Chapter 1 Introduction - This chapter introduces the Rack KVM device system, including its functions, features, and advantages, and describes and introduces the front and rear panel components.

Chapter 2 Hardware Installation–This section describes how to install the product and the necessary steps - including basic stand-alone installation, multi-switch level connection installation, and IP module expansion installation.

Chapter 3 Basic Operation–Explain the basic operating concepts of the KVM switch.

Chapter 4 OSD Operation–Provides a complete KVM switch OSD (onscreen menu) introduction and explains how to use it.

Appendix - Main specifications and other technical information about the associated KVM switch.

Description of Terms

Symbol Indicates the text information that should be entered

[ ] The parentheses indicate the keys that need to be entered. For example, [Enter] means to press the Enter key. For keys that need to be entered at the same time, they are placed in the same bracket, and the keys are joined by a plus sign. E.g: [Ctrl+Alt]

1. Numbers indicate the actual operating sequence numbers.

◆ The diamond symbol indicates that the information is provided for reference, but is not relevant to the procedure.

● The origin symbol indicates the sorting sub-item information, independent of the operation steps.

Indicates the most important information.

Product Information

To find out more about KVM's products and how to use them more efficiently, please visit our website or contact an authorized dealer for more contact information.

Chapter 1

Introduction

Product Introduction

DIGITUS LCD KVM Switch is a computer equipment that allows administrators to control 8/16pcs computers from a set of USB keyboards, mouse, or a set of PS/2 keyboards, mouse. You can also choose a single port LCD KVM switch as the keyboard, mouse, monitor console devices; Front panel also adds one USB expansion port, you can easily add an external USB mouse operation. It support two-level cascade, enable a Single console to manage up to 256 computers.

In addition, according to the needs of users to expand the function, to KVM OVER IP transmission control mode, only need to add the product in the expansion card slot IP KVM module card (DS-51000-1), you can upgrade to remote network management digital KVM management device, user-friendly environment does not change the existing circumstances quickly and quickly upgrade the advanced control mode applications.

There are four convenient ways to switch the computer in the installation: (1) Use the Port Select button on the front panel of the switch; (2) Enter the hotkey combination from the keyboard; (3) From the On-Screen Display (OSD) select. The auto-scan feature provides automatic scanning and monitors the computers in the installation architecture one by one. (4) Through the expansion of the IP module of the network port for remote network control operation.

This product is very fast and easy to install, just simply connect the cable to the appropriate connection Port, no software settings, no cumbersome installation procedures, and there will be no incompatibility issues. As the device can directly access the keyboard input data, it can operate in a variety of operating platforms (compatible PC, Mac, Sun, etc.).

As it allows a single console to manage the many computers, a set of KVM installations,(1) eliminates the cost of individual keyboards, monitors, and mice for each computer; and (2) saves the cost of additional equipment that can be used by the additional devices. This allows for the installation of a set of KVMs that can be managed from a single console space; (3) to save energy costs; (4) to avoid moving back and forth between the various computers inconvenience and waste. (5) The rapid upgrade to IP control mode remote network control mode.

The series of LCD liquid crystal display can be divided into 2 models for you to choose: 17 inch and 19inch.

The modular design and installation of the product series, you can freely replace the actual needs of the KVM components to facilitate the free combination of different applications. According to the module type can be divided into 2 categories: VGA cable type, CAT5 connection type. 1, 8 and 16 port KVM choices are available.

Product Features

- A group of USB console can manage 1, 8 or 16 VGA interface computers
- Supports USB and PS/2 two computer interface
- Support cascade control up to 256 computers
- Support Cabinet depth size from 800~1100mm
- Easy switch operation by push button, keyboard hotkey and on-screen menu (OSD)
- BIOS-level access. Do not worry about the risk of viruses and Trojans invasion
- No installing any software and the driver
- 17 " or 19" LCD display and keyboard, mouse, KVM integrated into one chassis
- Additional front USB Port, convenient for user to extend USB peripheral keyboard and mouse
- Unique single installation design. It’s more convenient to technical installer.
- Control terminal lock function, close the LCD display Push into the track, can automatically limit the lock, pull out the armrest automatically unlock
- LCD power button, can turn off the monitor when not in use, save power, extend the life of the LCD monitor
- LCD can rotate 0-110 degree elevation angle, it is convenient for you to adjust the suitable viewing angle
- Support Remote Control IP module (DS-51000-1), supports multiple browser applications to access Internet Explorer, Chrome, Firefox, Safari, Opera, Mozilla, Netscape, etc.
- Support OSD to set user login mode and increase KVM login security requirements
- Support high video resolution in local and remote IP mode - Support 480i, 480p, 720p, 1080i and 1080p (1920 × 1200)
- Support remote firmware update
- Support DDC communication, to adapt to a variety of graphics devices
- The Auto Scan function monitors all computer operations
- Support cross-platform operation - Windows, Linux, Mac * and Sun *
- Keyboard and mouse simulation technology, fast switching without delay

Hardware Requirements

KVM module

- This LVD Console can work as 1 port LCD console with Single port KVM module cable (DS-72212)
- (Or) It can work as LCD KVM switch after adding a KVM module behind LCD console.
  - 8 port VGA KVM module (DS-72213)
  - 16 port VGA KVM module (DS-72214)
  - 8 port Cat5 KVM module (DS-72216)
  - 16 port Cat5 KVM module (DS-72217)

Computer

The following devices must be installed on each computer:

- A VGA video display card
- USB Type A connection port
  (or) PS/2 keyboard, mouse Port

Cables

There are different connection cable choices according to the user's requirement:

- VGA + USB (Type A) + PS/2 Keyboard (Purple) + PS/2 Mouse (Green)
  1.8m KVM cable (DS-19231)
  3m KVM cable (DS-19232)
  5m KVM cable (DS-19233)

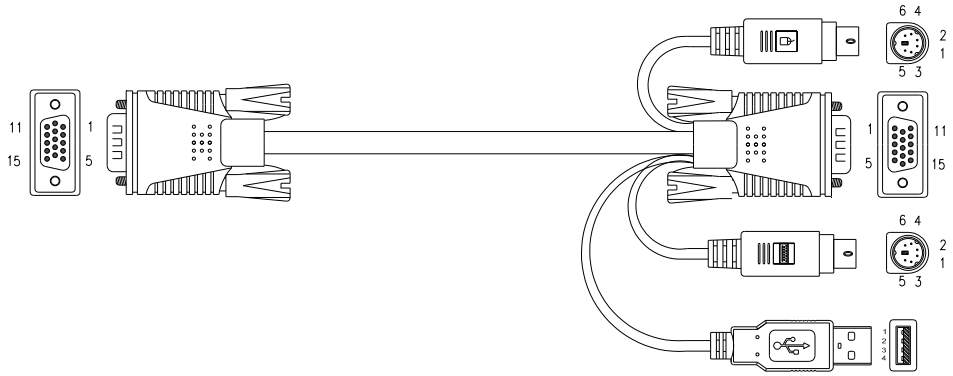

- CAT5 connection Dongle VGA + USB (Type A)
  Default included in DS-72217 and DS-72218 KVM module

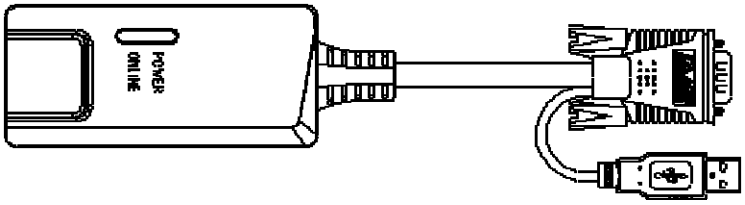

Over IP module (optional)

- Over IP control module “DS-51000-1” is needed to support over IP control
  (Optional installation)

Operation System

Operation System		Version
Windows		Windows 2000/XP/2003/2008/Vista/7/10
Linux	RedHat	9.0 or higher Fedora and above, RHEL AS 4, RHEL 5
	SuSE	10/11.1, OpenSUSE 10.2; SLES 10 SP1
	Debian	3.1/4.0
	Ubuntu	7.04/7.10
UNIX	AIX	4.3 or higher
	FreeBSD	5.5 or higher
	Sun Solaris	8 or higher
Mac		OS 9.0 to 10.6 (Snow Leopard)
Novell	Netware	6.0 or higher
DOS		6.2 or later

Hardware Introduction

Front View

17inch 4: 3 LCD Console: Model DS-72210

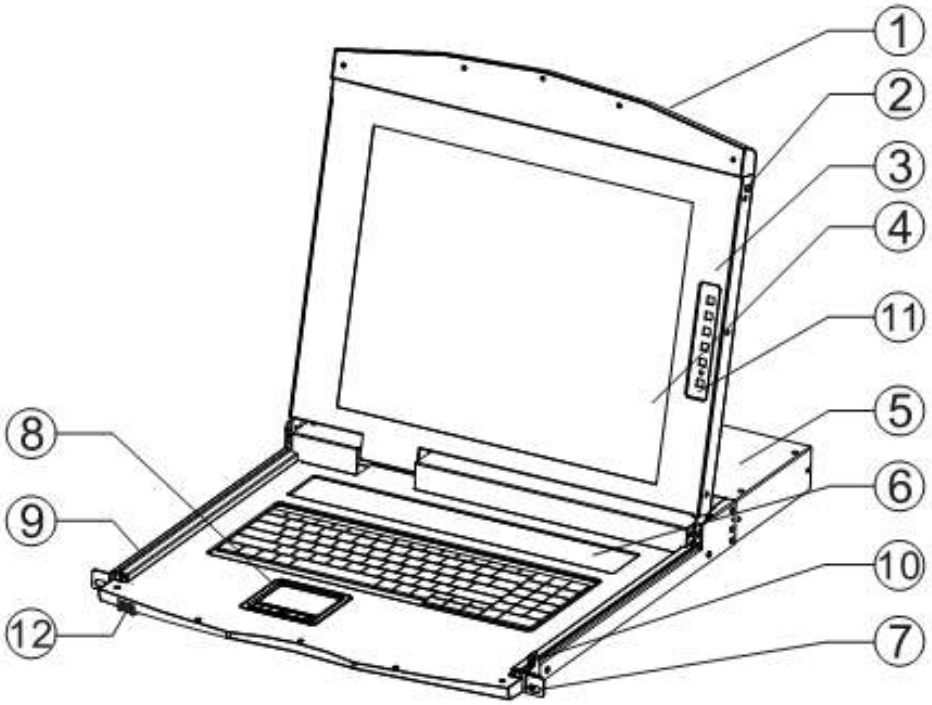

19inch 16: 9 LCD Console: Model DS-72211

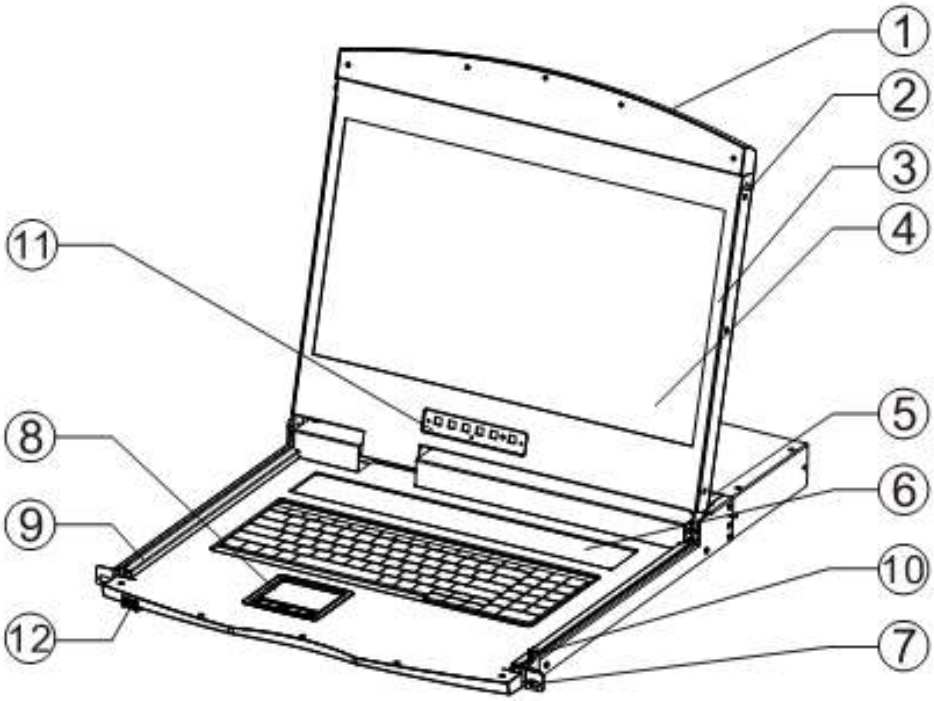

No	Part	Function Description
1	Upper handle	Pull the handle, slide the LCD module out and push it in
2	Lock	Used to lock the LCD module, pull out the module must first unlock, push into the automatic locking
3	LCD screen cover	Can be opened or closed with the handle, opening and closing angle of 0-110 degrees
4	LED screen	17 "or 19" LED LCD screen
5	KVM Module	KVM modules are free to replace and remove
6	KVM Key panel	The KVM Port manual switch function is completed by pressing the key
7	Front mounting brackets	The LCD KVM can be installed on the cabinet posts with screws
8	Touch Mouse Pad	KVM console mouse, can control the computer's computer operation
9	Slide rails	LCD module sliding track, can be telescopic freely
10	Keyhole	Corresponds to the latch of the LCD module
11	LCD Keypad Panel	Used to control the LED screen display adjustment and switch
12	Front USB	Used to access an external USB keyboard or mouse

Rear View

Rear view of the LCD console unit, where should connect to 8/16 KVM Module or a Module cable.

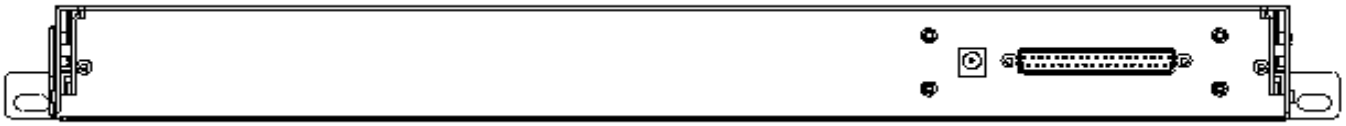

LCD KVM Single port Rear View

User should choose required KVM module from 1/8/16 port and attached to it. Please check “KVM module” in following page.

KVM module

- Single port KVM module cable (DS-72212)
  LCD Connector DB37P
  Computer-side VGA + USB (Type A) + PS/2 keyboard (purple) + PS/2 mouse (green)
  It is needed if no 8/16 KVM module connected to LCD console.

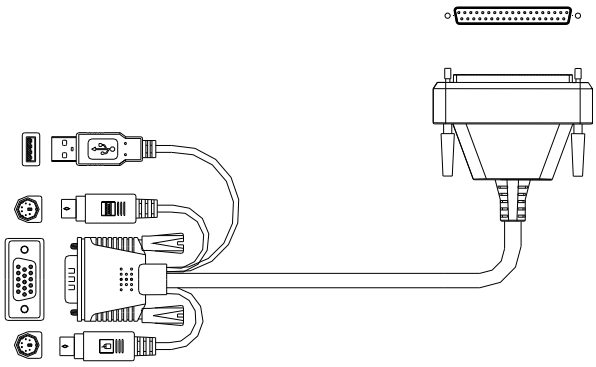

- **8 Port VGA KVM module** (DS-72213)

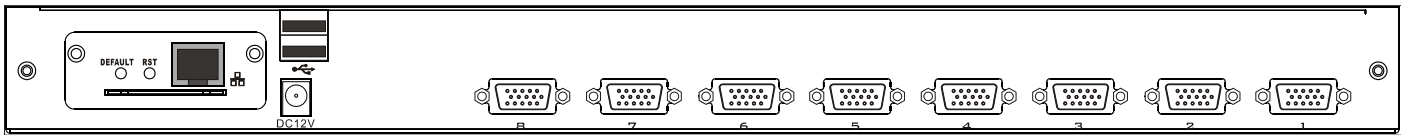

8 port VGA Rear View (with IP module)

- **16 Port VGA KVM module** (DS-72214)

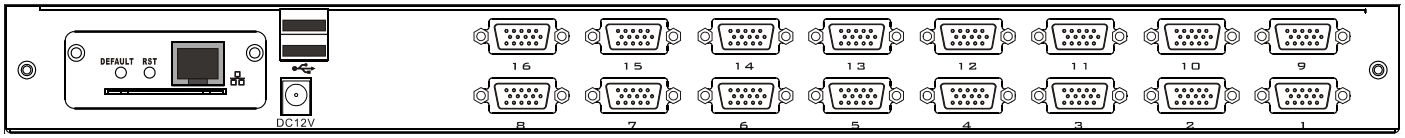

16 port VGA Rear View (with IP module)

- **8 Port Cat5 KVM module** (DS-72216)

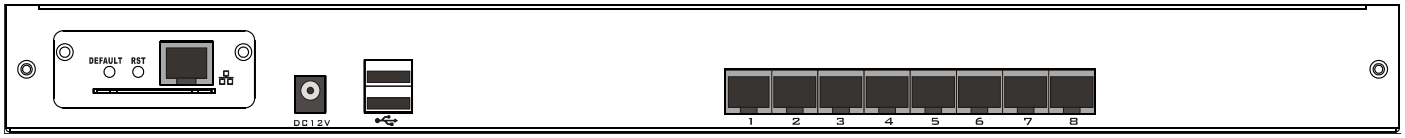

8 port CAT5 Rear View (with IP module)

- **16 Port Cat5 KVM module** (DS-72217)

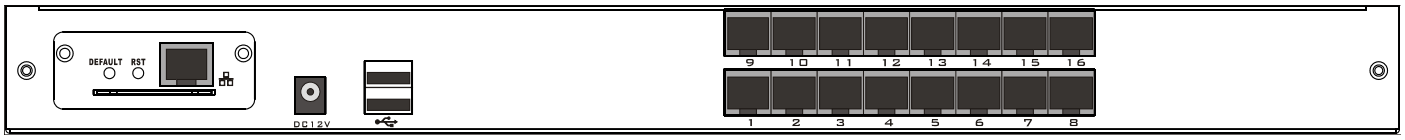

16 port CAT5Rear View (with IP module)

Front view of the 4: 3 screen and 16: 9 screen:

17inch 4: 3 screen

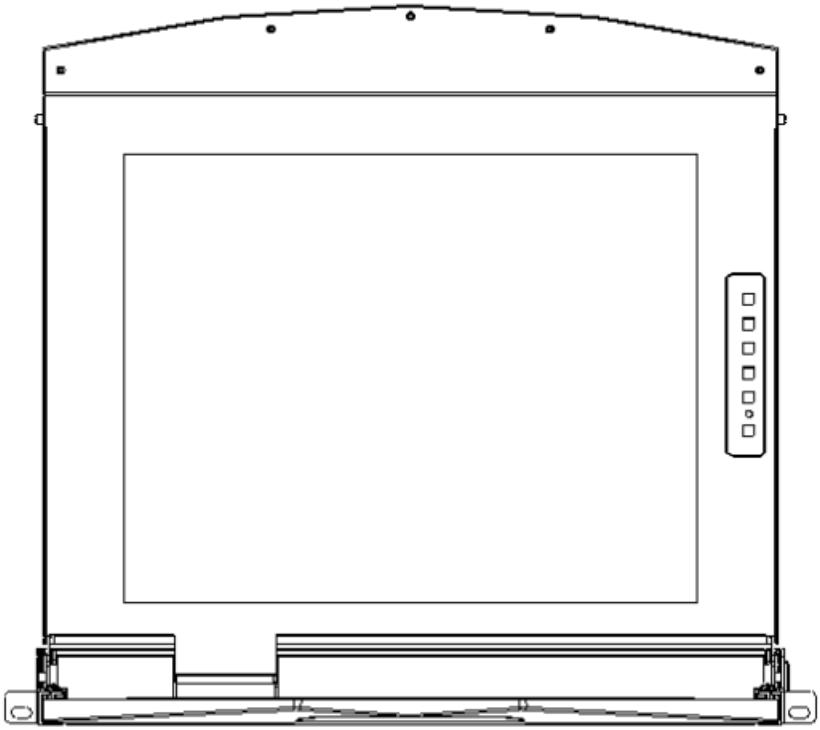

19inch 16: 9 screen

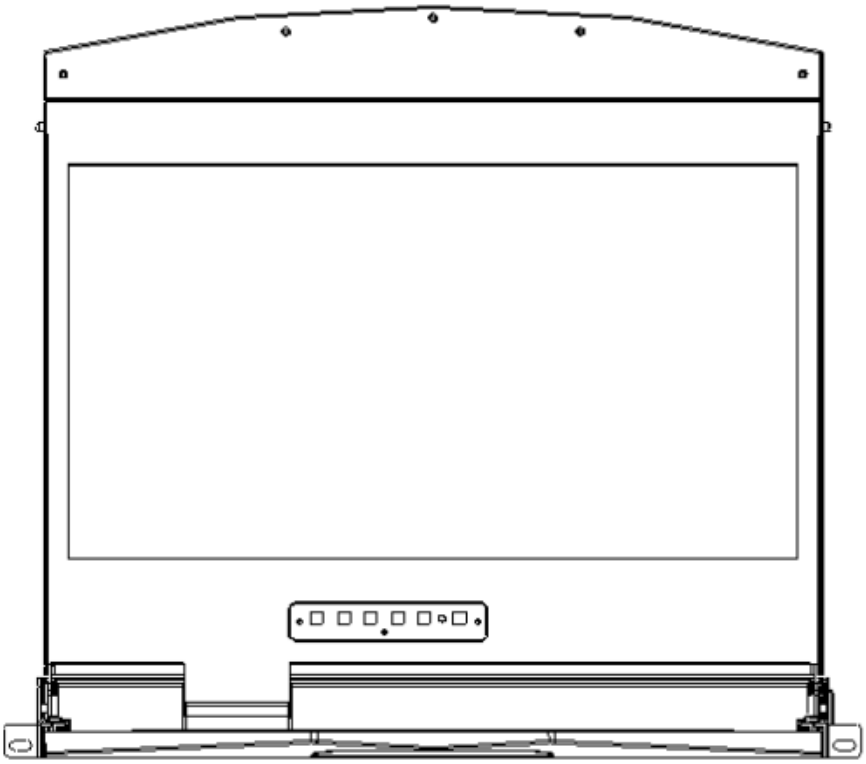

Overall Dimensions of the LCD KVM

LCD Console Dimension: 462.6*445*45mm

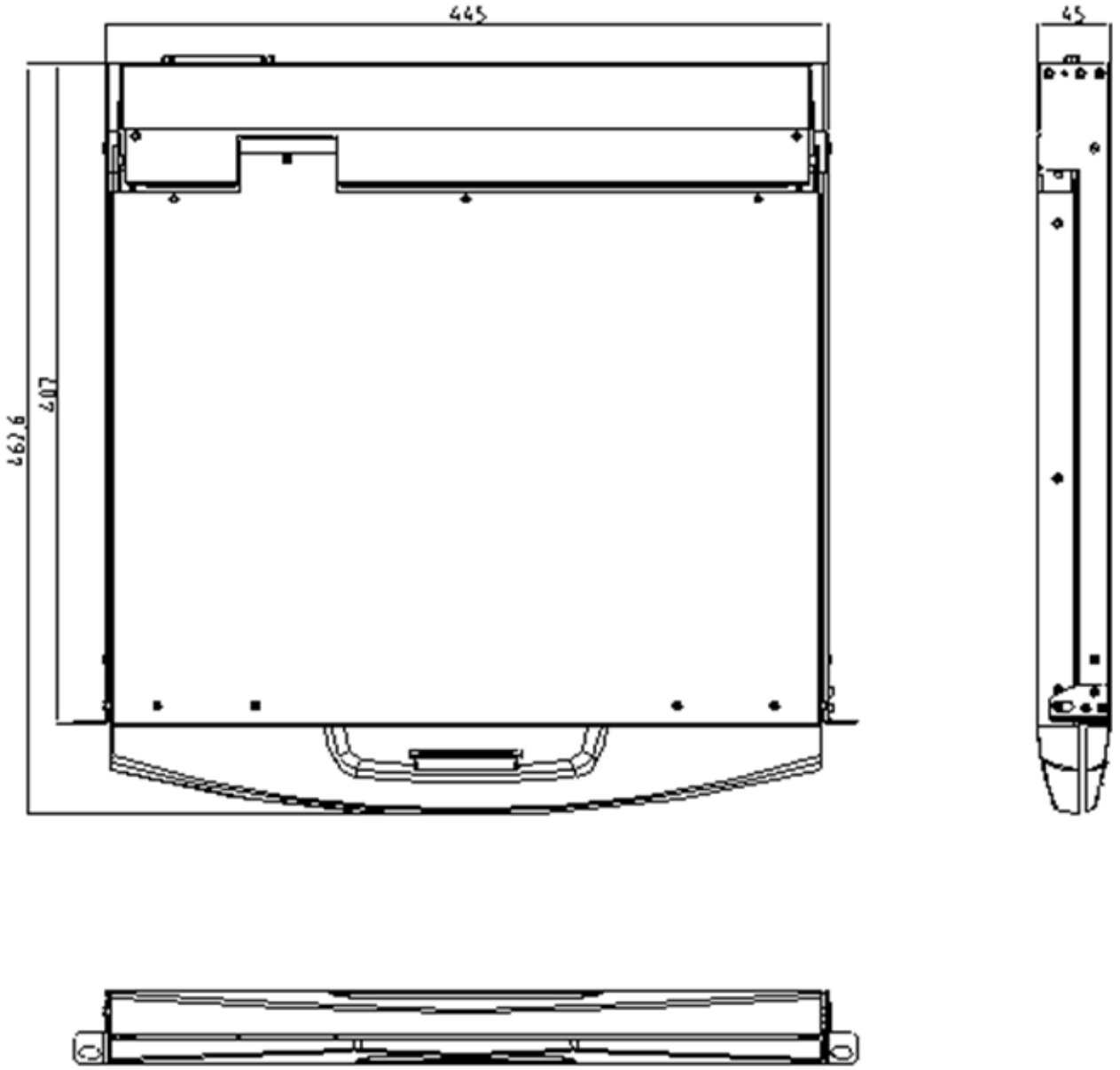

LCD KVM Dimension: LCD Console with KVM 8/16 port KVM module
611x445x45 mm

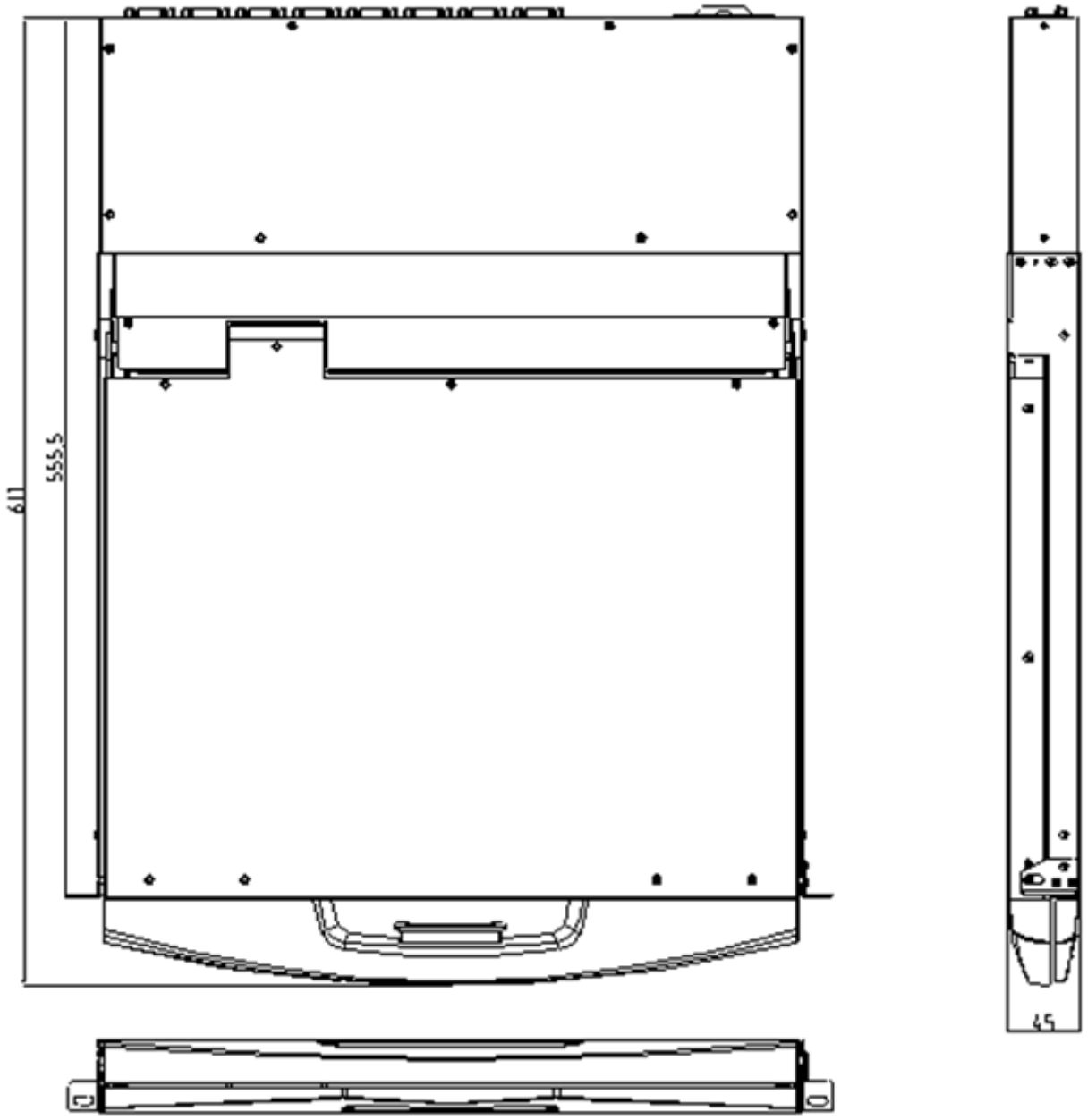

Chapter 2

Hardware Installation

Stacking and Installation Precautions

1. Important safety information regarding the placement of the LCD KVM switch is listed in the appendix, please refer to it before proceeding.
2. Before installation, please make sure that all the devices connected to the power supply are turned off. You must unplug all the power cord of the computer with keyboard power on
3. LCD KVM switch packing stuffed with stuffing in the process of delivery to protect the product. Attach the protective film and filler to the LCD module and remove the filler before mounting.

The LCD KVM switch can be placed in any suitable plane and is sufficient to securely support the weight of the equipment plus additional cables; Please make sure that the plane is clean and free from other debris that can affect the ventilation and normal operation of the switch.

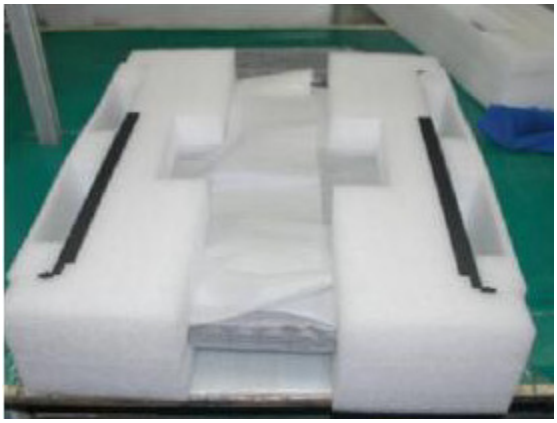

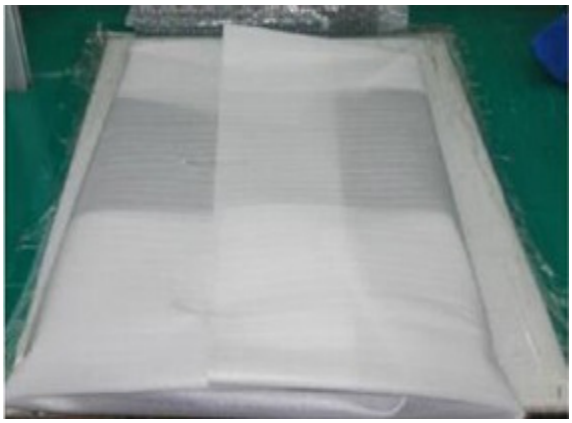

Single Port LCD KVM Cable (DS-72212)

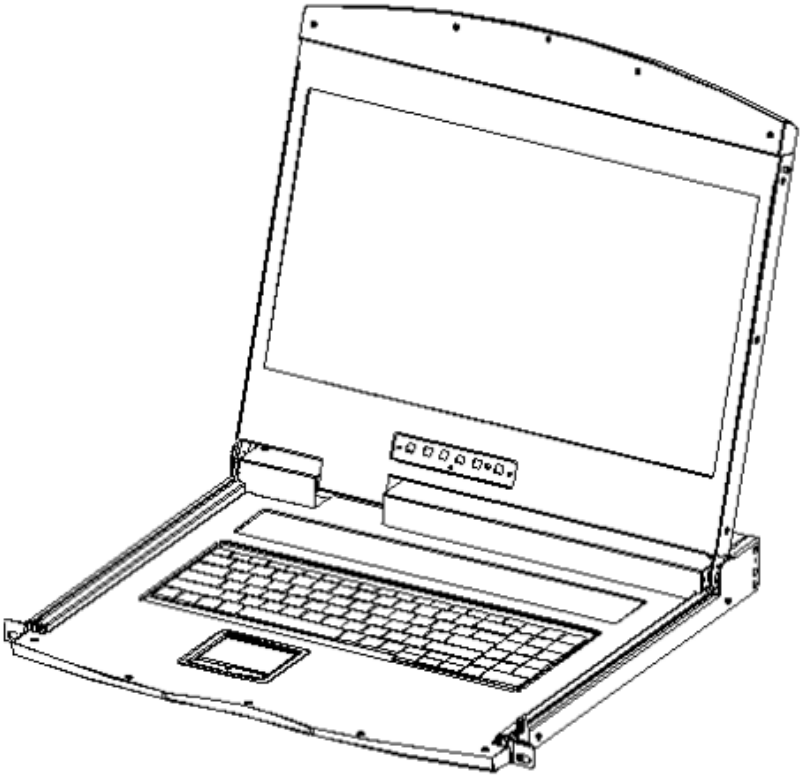

- VGA Single port LCD KVM

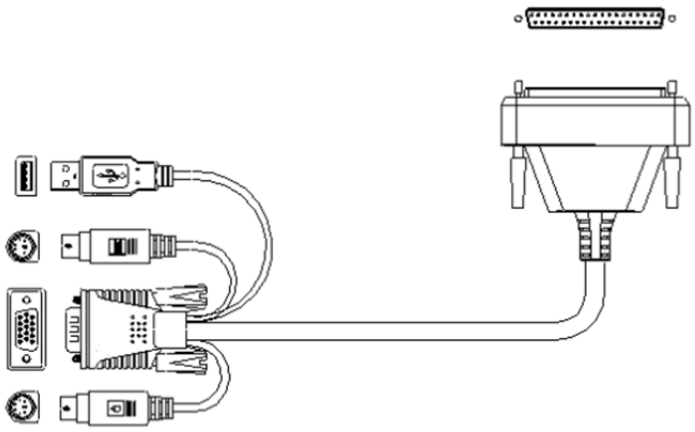

(1 Port KVM module cable: DS-72212)

KVM Module Installation (DS-72213, DS-72214)

This series of LCD screen and keyboard, mouse and the rear part of the KVM part of the components can be demolished separation, this design allows you to change the KVM components, or KVM components damaged KVM components dismantled after the return to the manufacturer for repair and replace.

Please refer to the figure for loading and unloading operations:

1. Now put this series of products on the appropriate operating platform, ready for Screwdriver tools for subsequent use of removable screws.

Remove the KVM assembly and the captive screws on the side brackets as shown to separate the KVM assembly from the front LCD assembly.

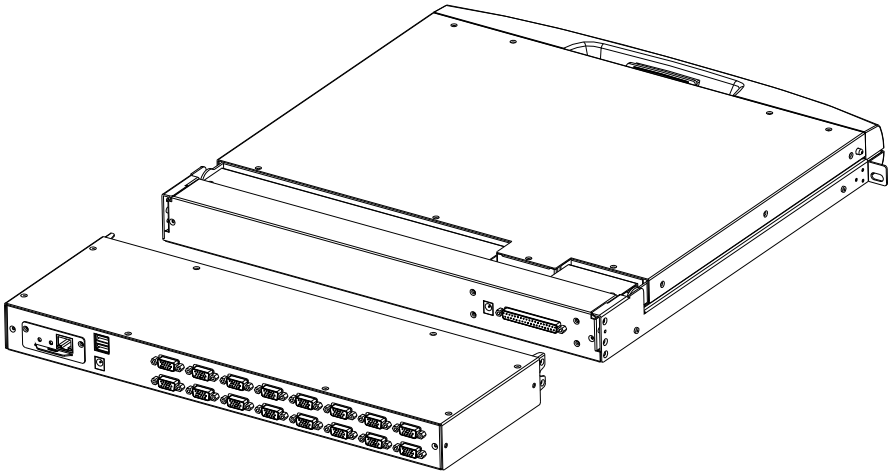

2. Please be careful to connect between the KVM module & LCD console. During the installation or removing, it may damage the connection interface and equipment function failure.

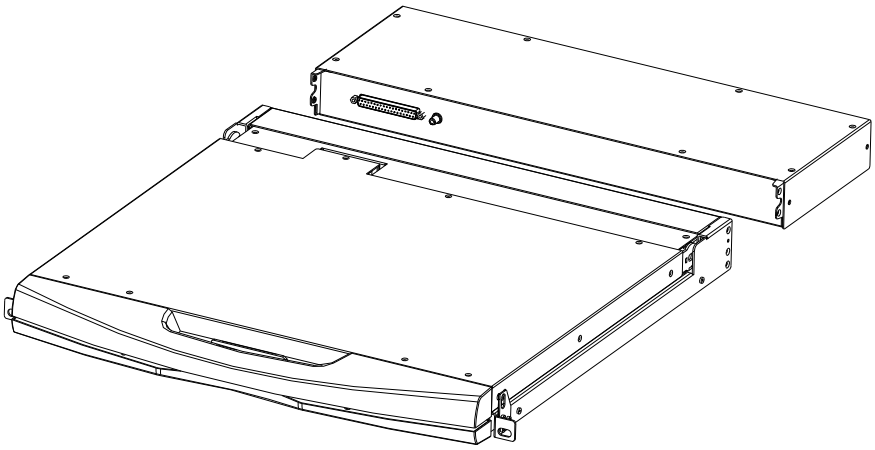

3. Connect Power adapter
4. Turn on computers

CAT5 KVM Module Installation (DS-72216, DS-72217)

Connect DB 37PIN to LCD Console, similar to VGA KVM module
To install a Cat 5 KVM module, refer to the following diagrams and do the following:

1. Plug your USB keyboard and mouse into the USB console port if 2nd console needed.
2. Use a set of CAT5e/6-wire connectors to plug into any available CAT5 Port on the switch. Maximum CAT cable length support 60m.
3. Plug a CAT5e/6-wire connector into the CAT5 connector on the Dongle module of the KVM, and connect the corresponding VGA video connector, USB or PS/2 connector of the Dongle cable to the corresponding port on the PC.
4. Plug the power adapter supplied with this package into the AC power source, and plug the other end of the power adapter into the power jack on the switch.
5. Connect the network cable to the IP port of the IP module. (Optional)
6. Turn on the computer.

Note:

1. Make sure that all plugs are connected to the same group of KVM connection port jacks (all connected to Port1, or all connected to Port2).
2. The IP module is an optional module of the product. If the product you purchased does not include the module, please ignore the related operation in Step 5.
3. Before using the IP module, please make the appropriate configuration and network debugging after the access to the network you want to connect, or may fail to connect because of normal remote control. (Refer to the manual of the IP module product manual for how to use and debug the IP module.)
4. LCD KVM conversion module is divided into two types: PS/2 and USB port, you can connect your computer to choose the appropriate conversion module to use.
5. Make sure you are connecting to a computer and LCD KVM switches have a good grounding protection altogether, or it may produce a video display problems
6. For display problems caused by transmission distance, electromagnetic interference, common ground, etc., it is recommended to use Category 6 shielded network cable to connect and try to improve the display effect

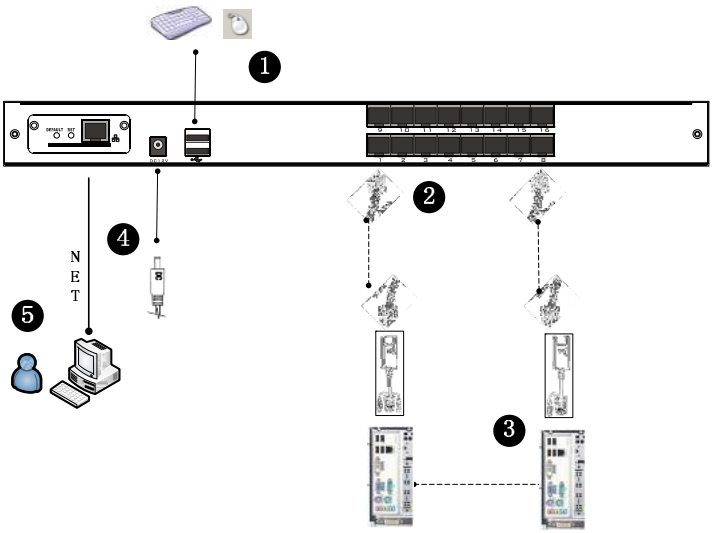

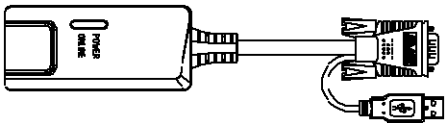

(Dongle module)

*****Maximum cable length 60m**

IP Module Installation (DS-51000-1)

If you already have KVM module attached. You can directly purchase the IP module for equipment upgrades and expansion, the operation method is simple and quick, can quickly enhance the integrated management of KVM Application over IP control.

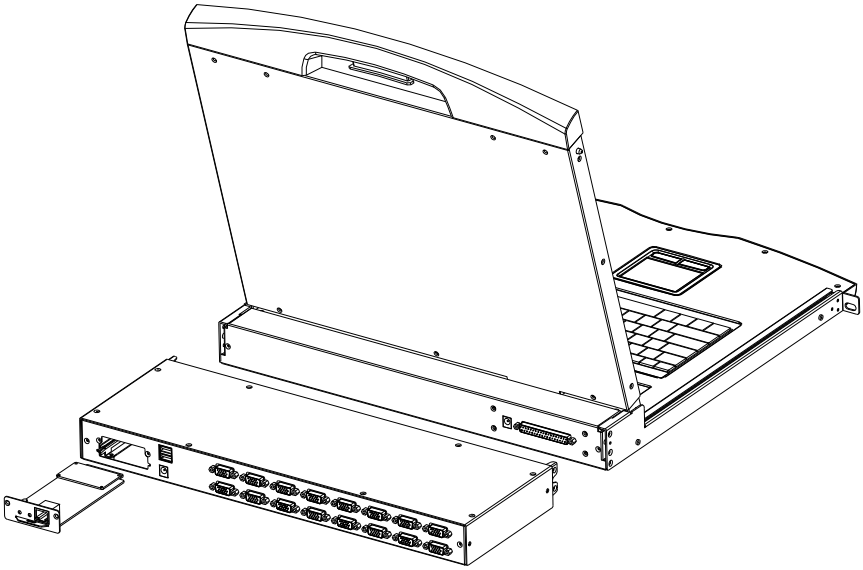

1. Find the rear of the device, expansion slot outside the blank position for installation, you need to prepare a screwdriver for removal and installation tools.

2. Before installation, use a screwdriver to remove the two fixing screws on the blank.

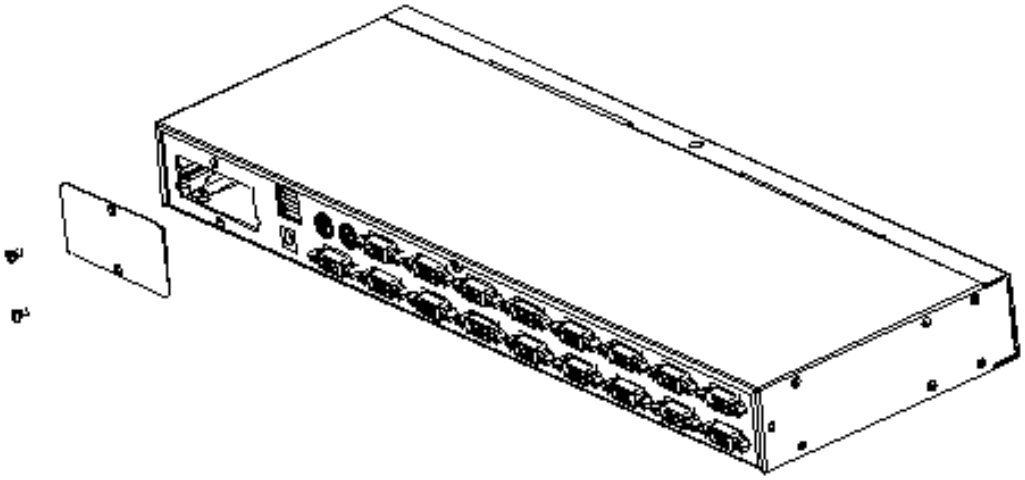

3. Remove the blank after you can see the need to expand the installation of the IP module placement cavity, keep the screw removed down.

4. Remove the extended IP module and push it gently into the recess in the mounting module cavity as shown.

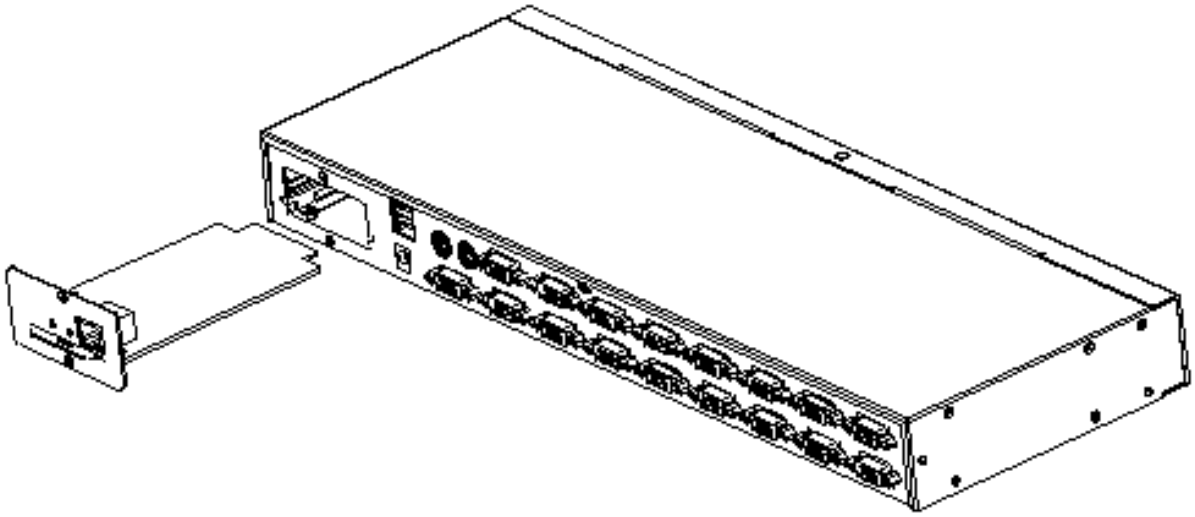

5. After pushing the IP module to the bottom, fix the IP module with the two screws that have been removed before.

6. After installing the IP module, you need to follow the instructions of the IP module to install the software and configure the IP address of the device before you can connect the network cable to the switching device. After the installation is complete, you can access the network to log in. (For details, refer to the IP module's product manual.)

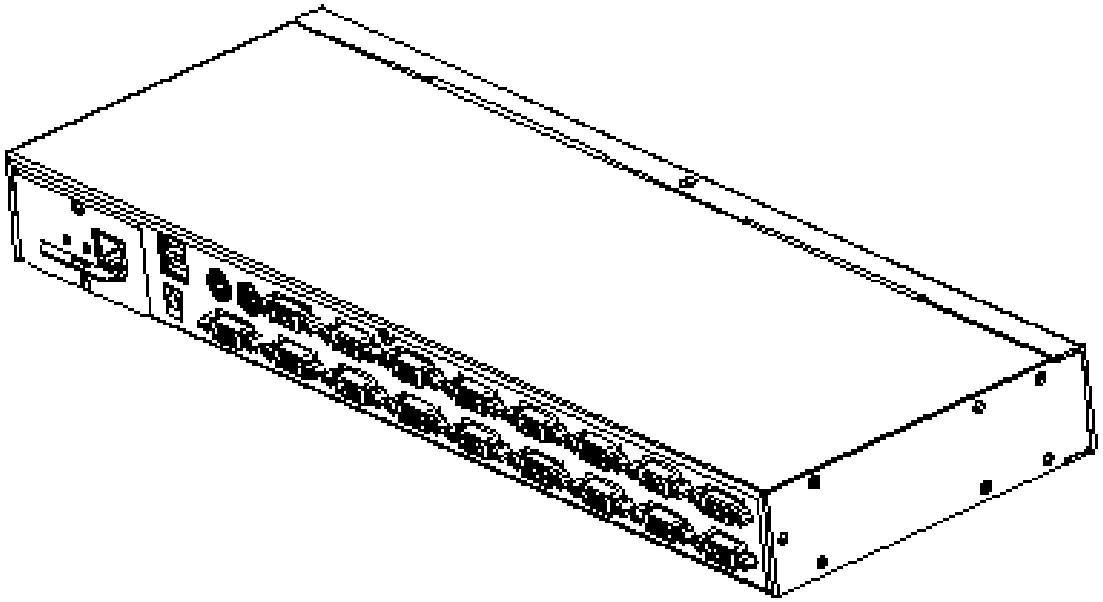

Rack Mount INSTALLATION

Before Use: Make sure all the devices are power off.

Built-in mounting bracket installation:

- The built-in mounting bracket comes with a nut, and the fixing nut is welded inside the bending hole at the top of the bracket. Install the bracket into the cabinet mounting post on the upper cabinet, align the bracket mounting holes with the holes in the cabinet mounting column, and then use the screws to fix.
  Mounting Bracket length is 390+560mm. It can support cabinet depth size from 800~1100mm

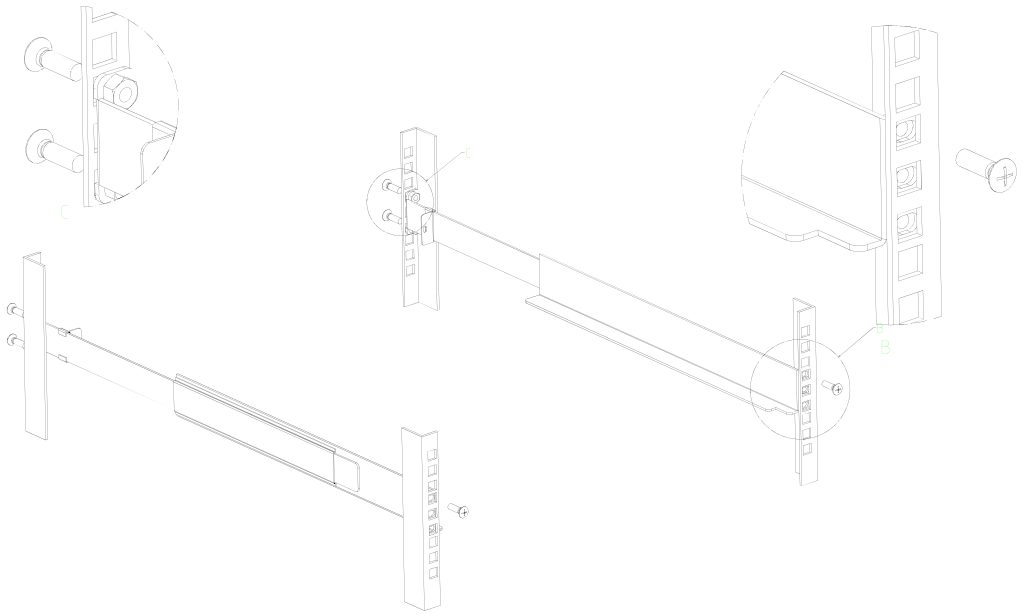

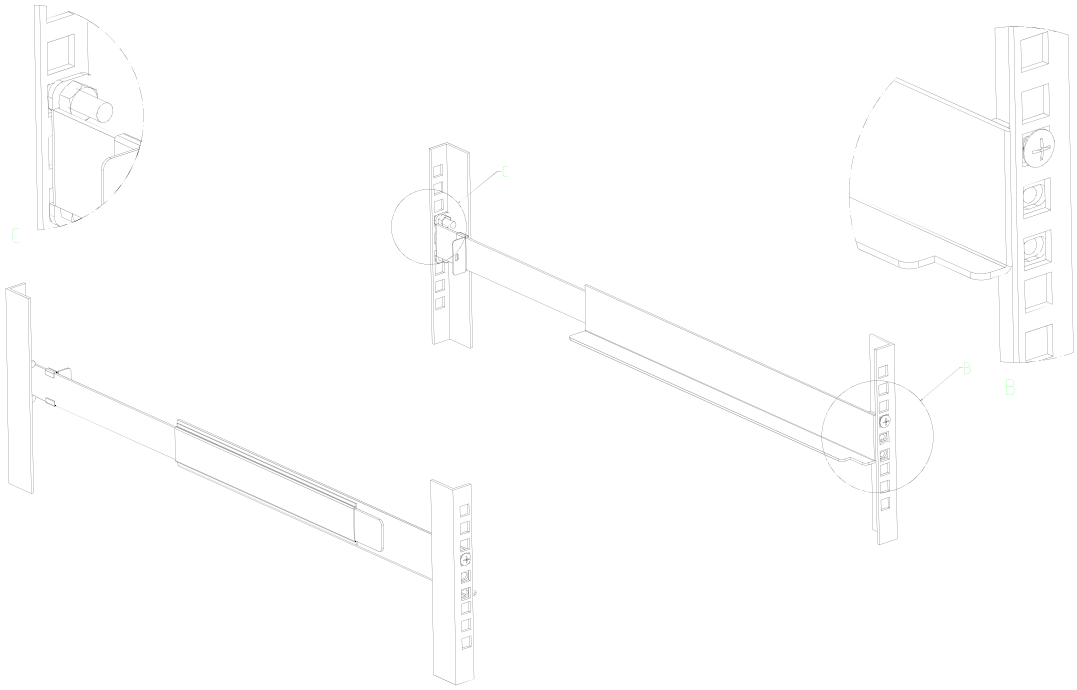

- Place the KVM Switch in the installed bracket and secure the KVM Switch, cabinet and mounting bracket.

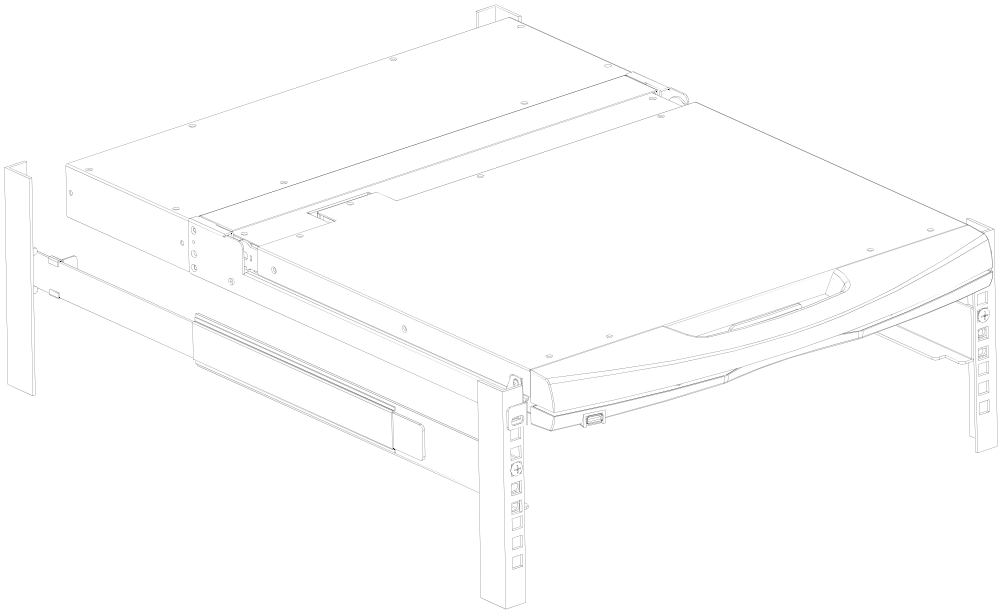

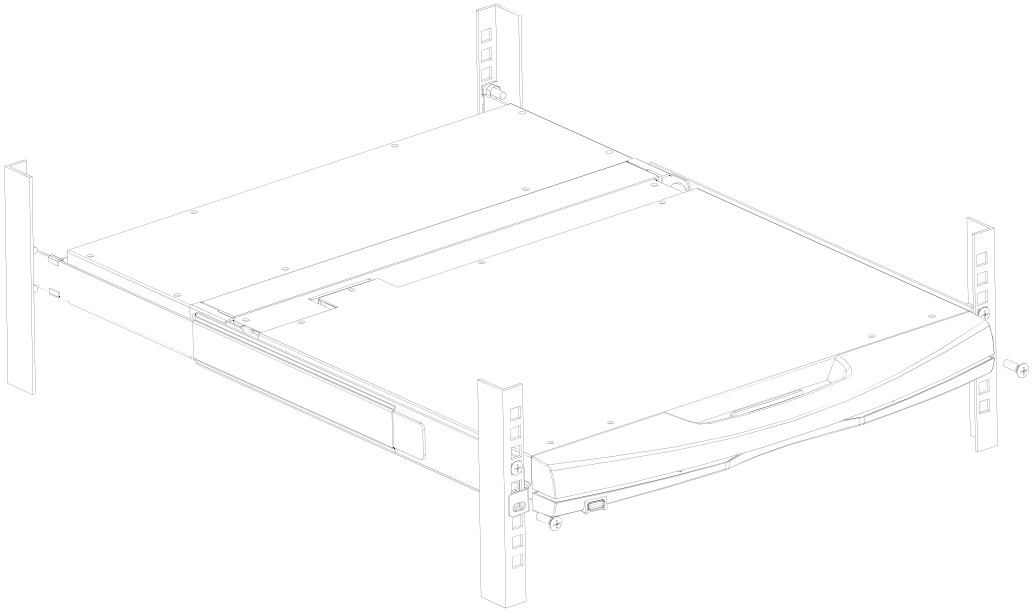

- Mounting and fixing in the bracket tail with Lock Ear and Screws from accessory

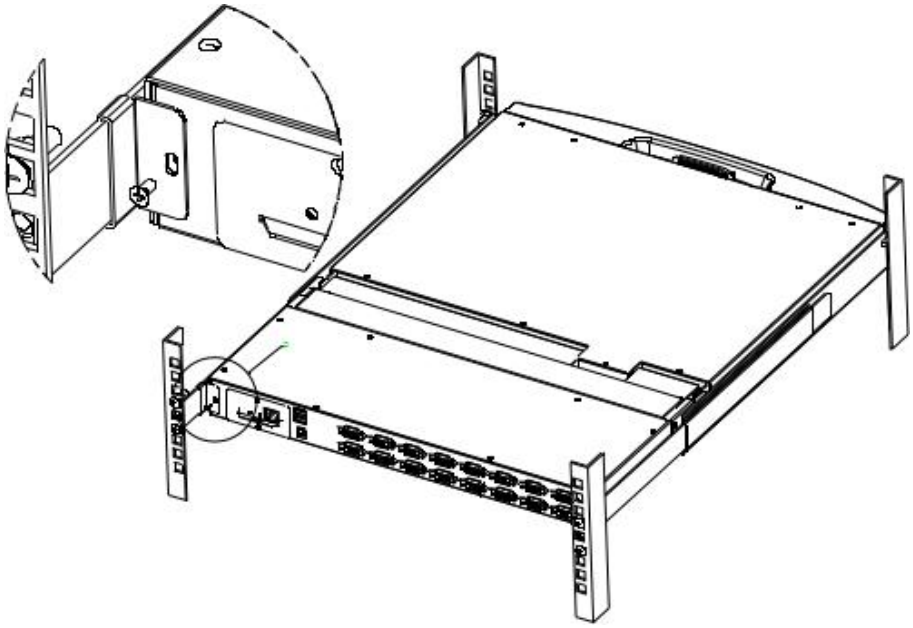

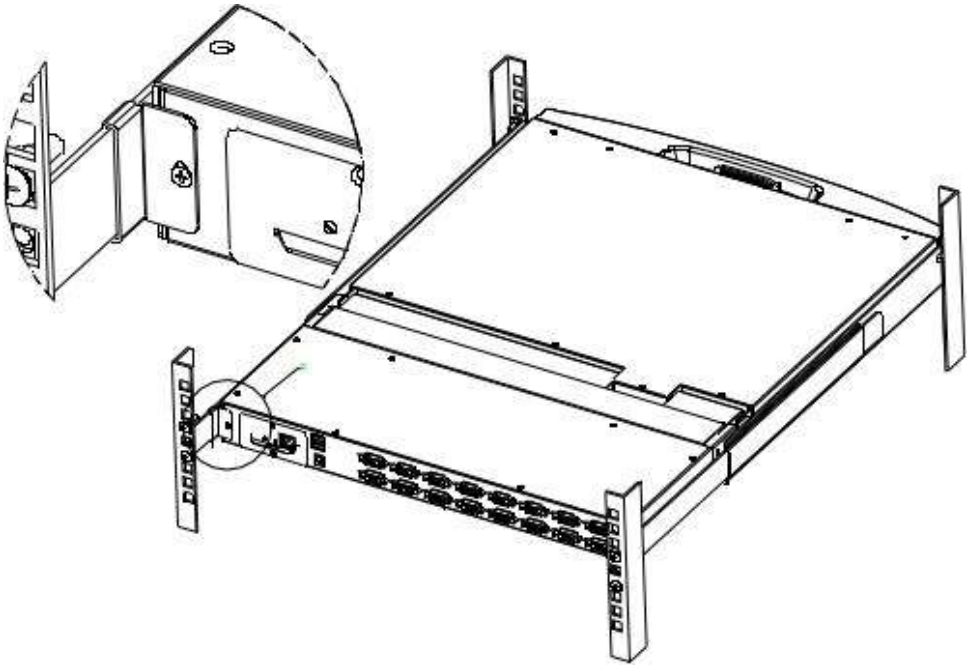

- Screws mounting position instruction

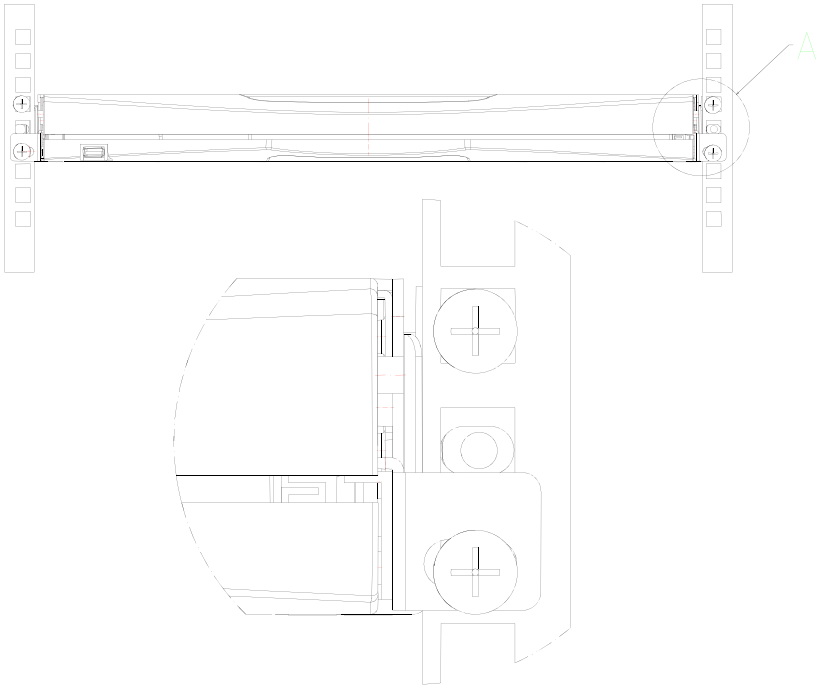

Computer Device Installation

Note: Before the installation, make sure that the equipment is powered off. To prevent damage to the equipment during installation, make sure that all the devices installed are well grounded.

◆ **VGA KVM module installation**

To install a single-level KVM, refer to the following diagrams (numbered in the order of steps on the graph) and do the following:

1. Plug your USB keyboard and mouse into the USB console port if 2nd console needed.
2. Using a set of KVM cables corresponding to the model, plug the VGA connector into the VGA Port of any available VGA port on the switch.
3. Plug the corresponding VGA video connector, USB or PS/2 connector of the KVM cable into the corresponding port on the Computers.
4. Plug the power adapter supplied with this package into the AC power source, and plug the other end of the power adapter into the power jack on the switch.
5. Connect the network cable to the IP port of the IP module if IP module is equipped.
6. Turn on the computer.

Note:

1. Make sure that all plugs are connected to the same group of KVM connection port jacks (all connected to Port1, or all connected to Port2).
2. IP module is an optional module of the product. If the product you purchased does not contain the module, please ignore the related operation in Step 5.
3. Before using the IP module, please make the appropriate configuration and network debugging after the access to the network you want to connect, or may fail to connect because of normal remote control. (Refer to the manual of the IP module product manual for how to use and debug the IP module.)

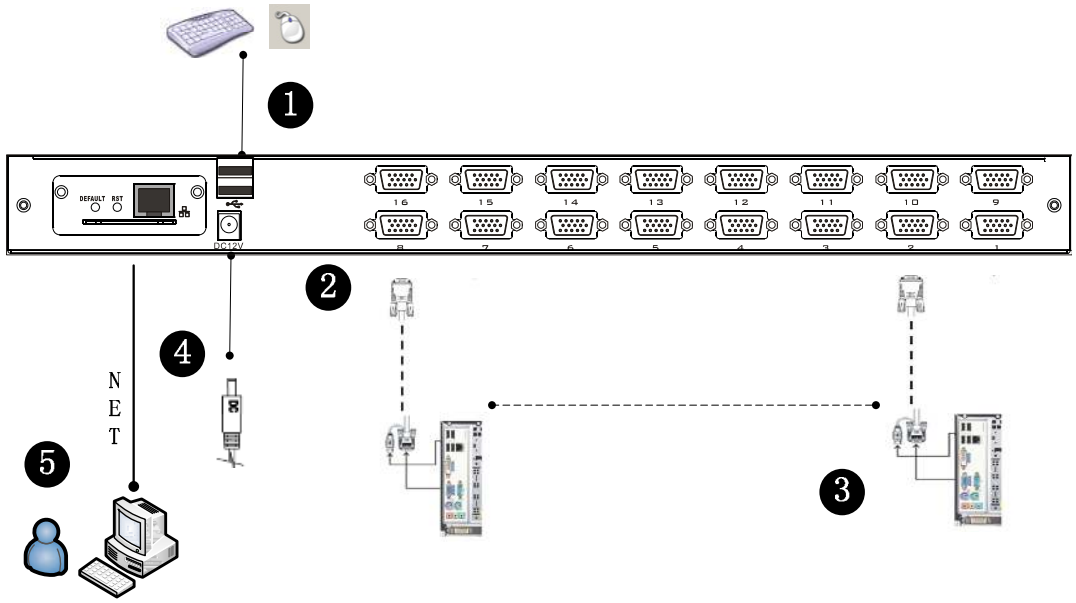

Cascade Device Connection

This product can be cascaded to increase the number of control devices, combined with IP remote control mode can be flexibly used in a variety of user environment requirements. 8 Port KVM switch (DS-23200-2) and 16 Port KVM switch (DS-23300-2) are available for cascade expansion.

In the VGA switch Cascade mode, the keyboard, mouse and computer connections is same with the stand-alone connection, this part will not repeat them, the number part of the description is as follows:

1. A cascaded KVM switch can be connected in two ways by using a USB/PS/2 KVM cable as shown in following connection figure. Connect to the upper-level switcher.

2. The number of computers connected to each level can be freely increased or decreased according to your requirements.

3. Between the level of IP module can be optional remote control, can also be handed over to the KVM switch from the top of the local and remote as a unified control and management operations.

Note: This product cascade mode is divided into two levels, so you need to set the cascade connection mode switch OSD Menu with two levels of hotkey for two different hotkey combinations, or the OSD cannot be started when cascade.(Refer to the OSD chapter for details on the OSD Hot Key settings.)
Example:

LCD KVM default OSD hotkey:	[Ctrl][Ctrl]
Cascaded KVM switch default OSD hotkey:	[Alt][Alt]

Connection diagram please see the following figure (VGA port LCD KVM switch cascade)

KVM Switch Cascade diagram (8-Port DS-23200-2/16-Port DS-23300-2)

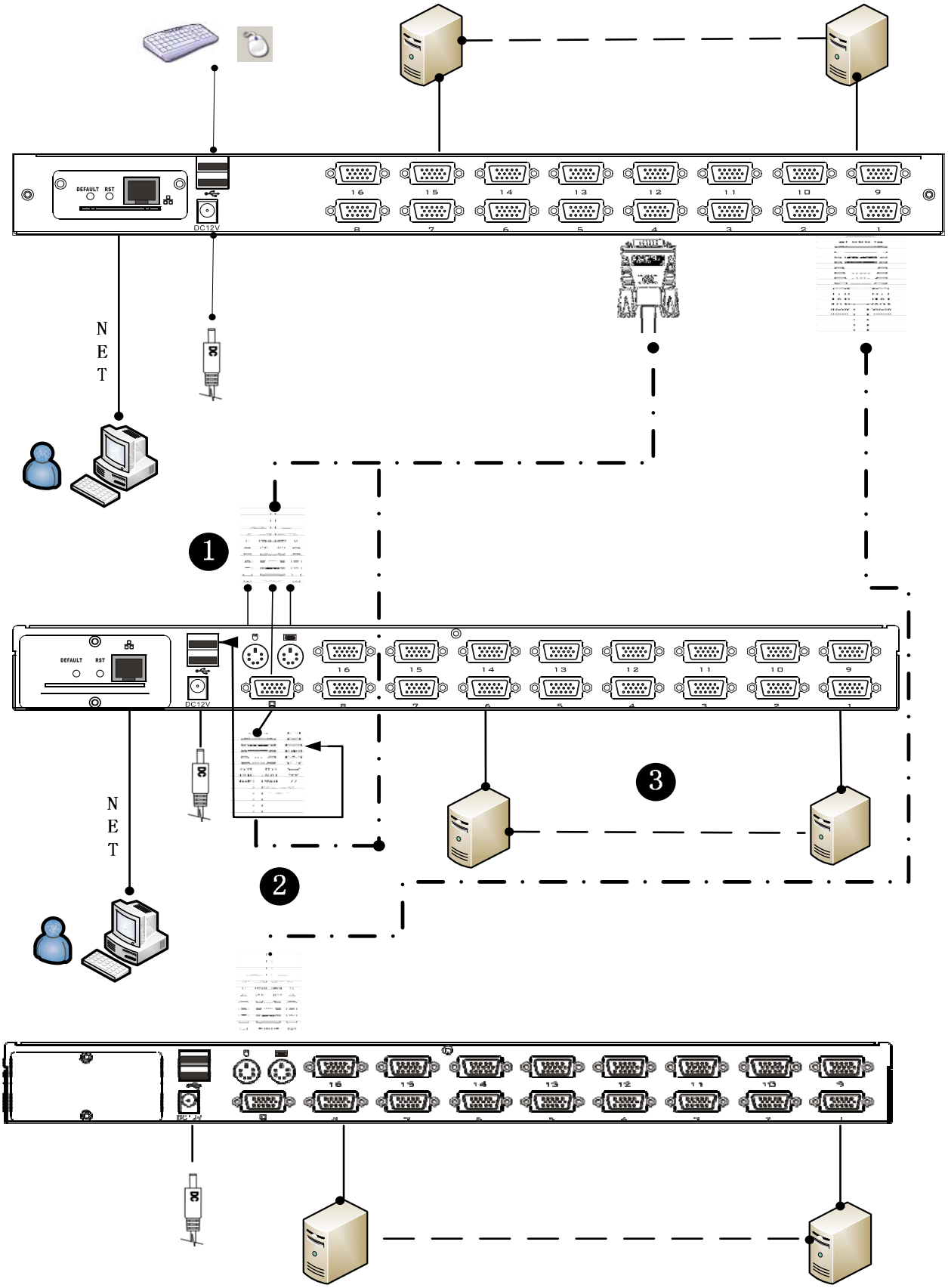

Note: Please connect only one of interface from USB or PS/2 (USB is suggested)

Disassembly of the Keyboard Module

If you need to replace the LCD module part of the keyboard or repair this part, can also be demolished according to the following diagram.

1. The LCD KVM placed in the rack and fixed, the LCD panel turned up, revealing the keyboard, the mouse's operating surface.

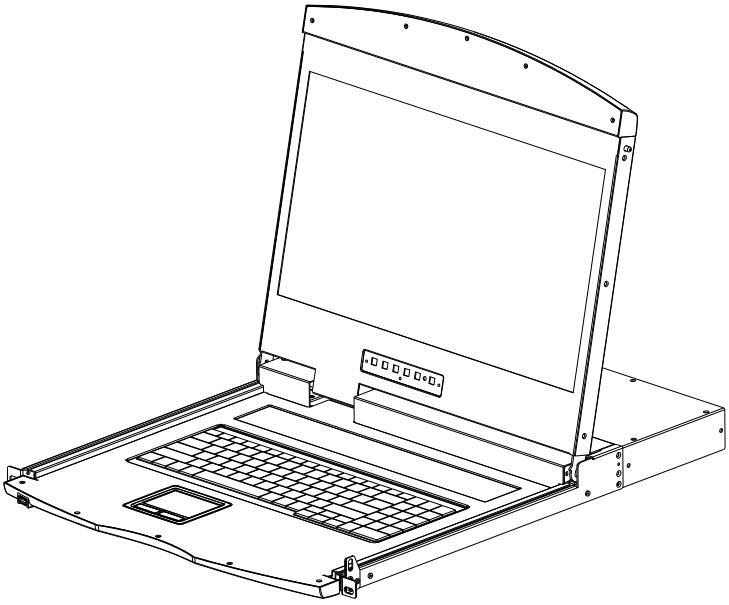

2. The bottom of the keyboard panel has a circular hole, you can use your fingers through the circular hole, the top of the keyboard.

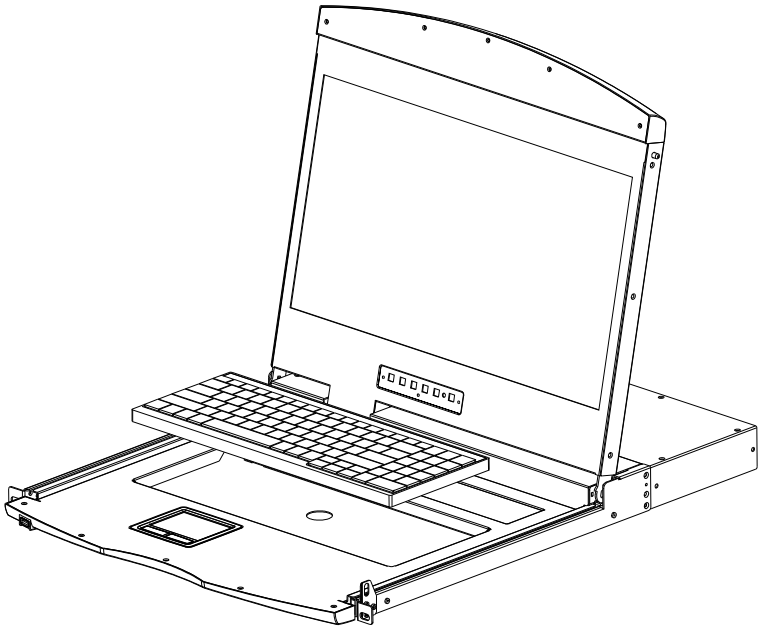

3. Pull the keyboard from the limit slot gently, find the connection side of the USB interface, remove the USB from connection side, the keyboard could be taken out. Thus completing the demolition of the keyboard module.

Note: If you replace the installation, please first plug the keyboard USB interface, then put the keyboard module into the limit slot.

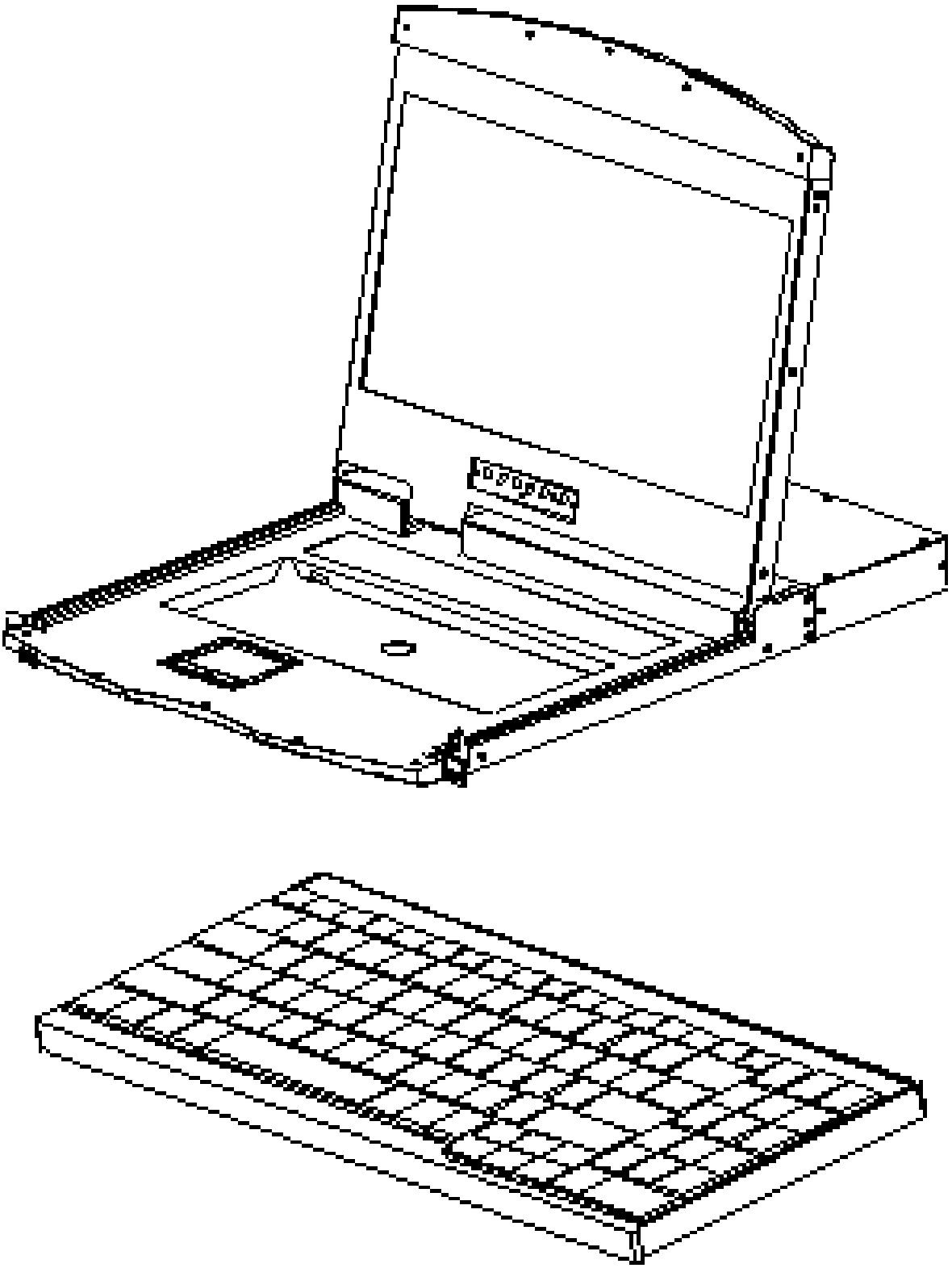

Chapter3

Basic Operation

Hot Plug

The KVM switch supports hot-plug, removing and removing components by unplugging the cables connected to the computer's port without shutting down the switch. To make the hot swap function work properly, follow these steps:

Hot – Plug Computer Connection

In order for OSD Menu to correspond to the KVM connection port changes, you must reset OSD Menu to display the latest connection port information, OSD menu settings. Please refer to the OSD Menu section for more information about functions and usage.

Note: If your computer's operating system does not support hot-plug functionality, this feature may not function properly.

Hot – Plug Console Port

This product also provides keyboard, mouse and display hot-plug function. This product provides keyboard and mouse port for two interface types. Users can select the corresponding device connection type according to their usage and carry out corresponding control operation.

Note: If you access the USB and PS/2 keyboard, mouse device, you do not have to use two types of devices, otherwise, may cause the accused computer equipment mouse and keyboard response exception.

Connection Port Selection

The KVM switch can be used to quickly switch to any computer connected to the KVM in three modes: Manual button selection, OSD Menu screen selection, and hotkey selection.

Switch the Selection Manually

Use the buttons on the front control panel to select a port.

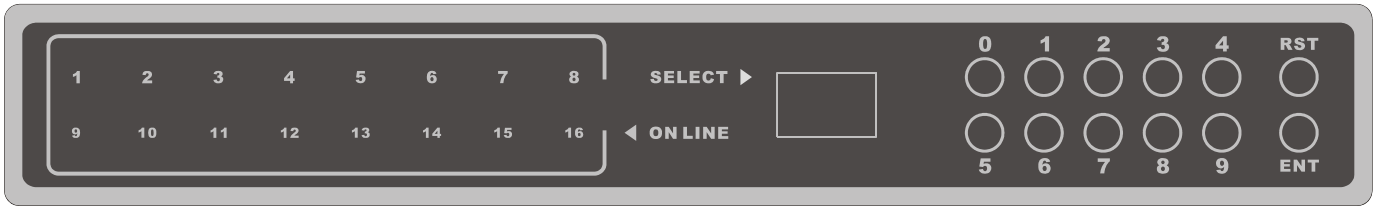

KVM switch button located in the top of the keyboard operating area, divided into three blocks, from left to right in order is the online indicator display area, Port switch to select the display area, Port switch digital button area.

- Online Indicator Display Area
  The LEDs in the display area are lit when the controlled computer connected to KVM Port is connected to the line. The LED indicating the port number is illuminated and you can see the KVM online Port status.
- Port Switch the Display Area
  The digital LED indicator in the display area shows the port serial number of the current working port when the working status is displayed, or the numeric key serial number you input when the key switch port changes.
- Port Switches the Numeric Keypad Area
  This area has the numeric keys of [0] - [9] and [RST] (reset button), [ENT] (confirm button), the number keys are used for Port selection, input the corresponding port number, [ENT] to finish the switch of Port. To reset the KVM switch, you need to click [RST] for 3-5 seconds to complete the KVM switch restart.

Monitor OSD Menu Screen Selection

- LCD OSD Menu Key Operation

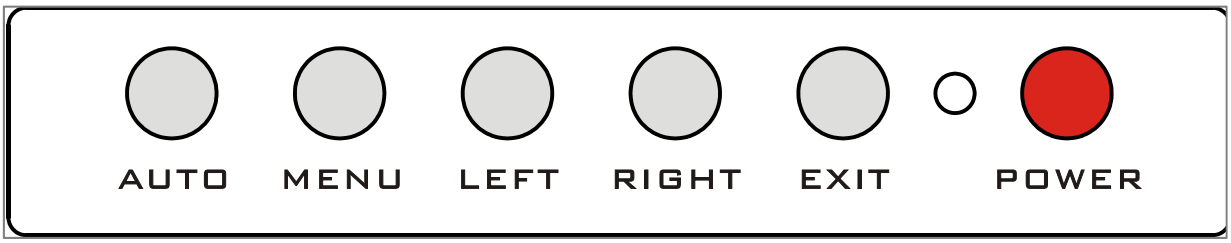

- [AUTO] Press the key to set the display setting for the screen to automatically adjust to the resolution
- [MENU] Press the key to perform the main function OSD Menu of the LCD screen, to select and set various functions of the screen
- [LEFT] Press the key to select the direction of the OSD menu, and move the current selection to the left by one unit
- [RIGHT] Press the key to select the direction of the OSD menu and move the current selection to the right by one unit
- [EXIT] Press to exit the OSD menu

- [POWER] Pressing the button allows you to turn the LCD screen on and off
- LED display for the LCD screen status indicator, you can indicate three working status: red, green, do not show the state. "Red" indicates that the LCD screen has been powered, but no video signal input. "Green" indicates that the LCD normally displays the video signal of the controlled computer. "No display" means the LCD screen has been powered off.

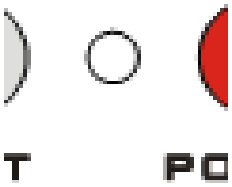

(A LED beside POWER button)

Hotkey Selection

This product offers four hotkey switching methods:
[SCRLL] + [SCRLL] + [NUM]
[CTRL] + [CTRL] + [NUM]
[ALT] + [ALT] + [NUM]
[SHIFT] + [SHIFT] + [NUM]
The default hotkey toggle key combination is [SCRLL] + [SCRLL] + [NUM] where [NUM] is the keyboard number 01-16, the keyboard combination hotkey input complete carriage return completed the command transmission, KVM switch will switch the corresponding number Of the Port computer. If you want to change the key combination of the hotkey, you can set and change it in the corresponding option of OSD Menu.

OSD Selection

For OSD Operation, please go to chapter 4 for more information.

Power Off and Restart

If you need to power off the KVM switch, do the following before turning it back on:
1. Unplug the power supply to the KVM.
2. Turn off all computers connected to the KVM switch.
3. Wait about 10 seconds, then reconnect the KVM switch.
4. Turn on the computer.

Note: If the PS/2 KVM cable is connected to the PC, you must connect the PS/2 cable to the PC before powering on. Otherwise, the keyboard and mouse will not operate normally.

Open Way of LCD Screen

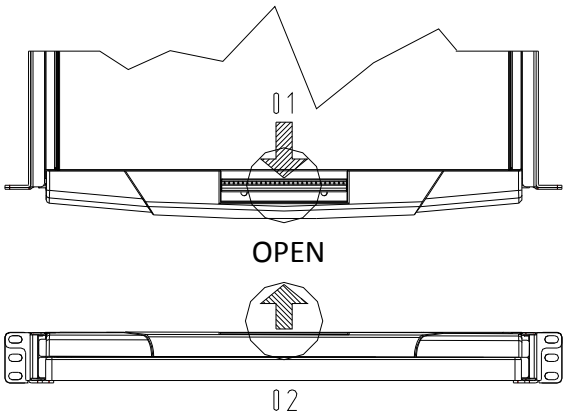

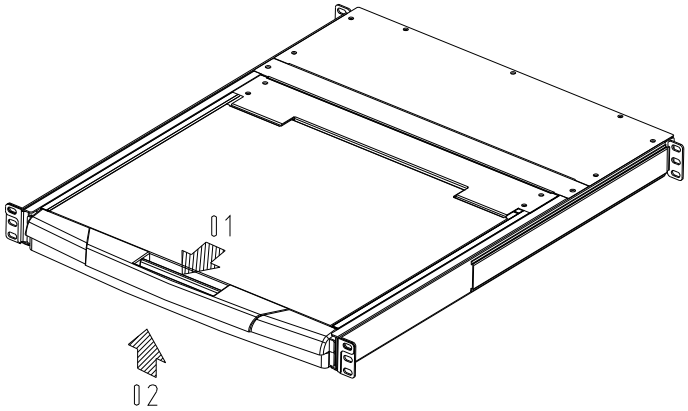

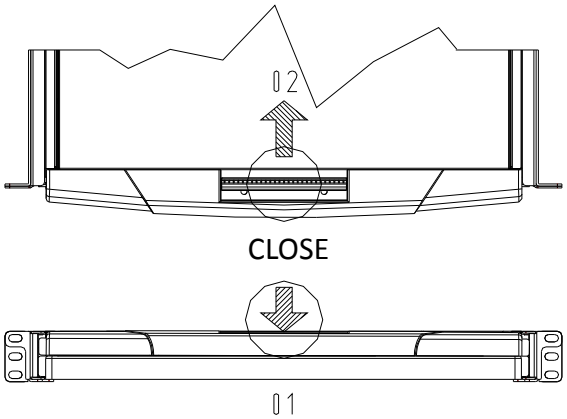

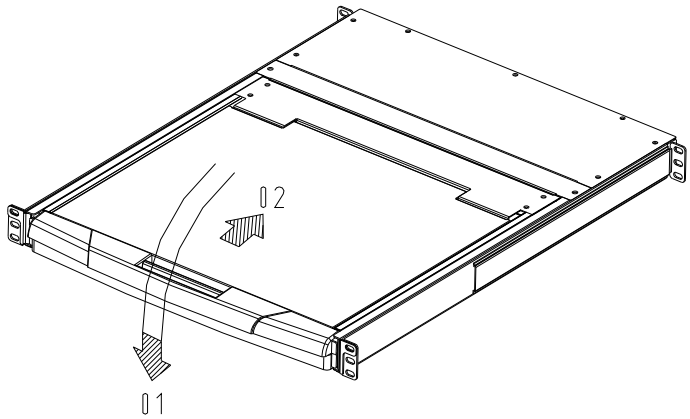

- When using, the LCD assembly can be unlocked from the side track by the handle of the upper part of the LCD unit. After unlocking, the LCD module can be pulled out from the slide rail. (Refer to the diagram above for operation)
- To open the LCD display screen, you can flip the screen upwards to fit the viewing angle only. The maximum angle that the LCD screen can be opened is 105 degrees -120 degrees. You can view the screen at any angle you like.

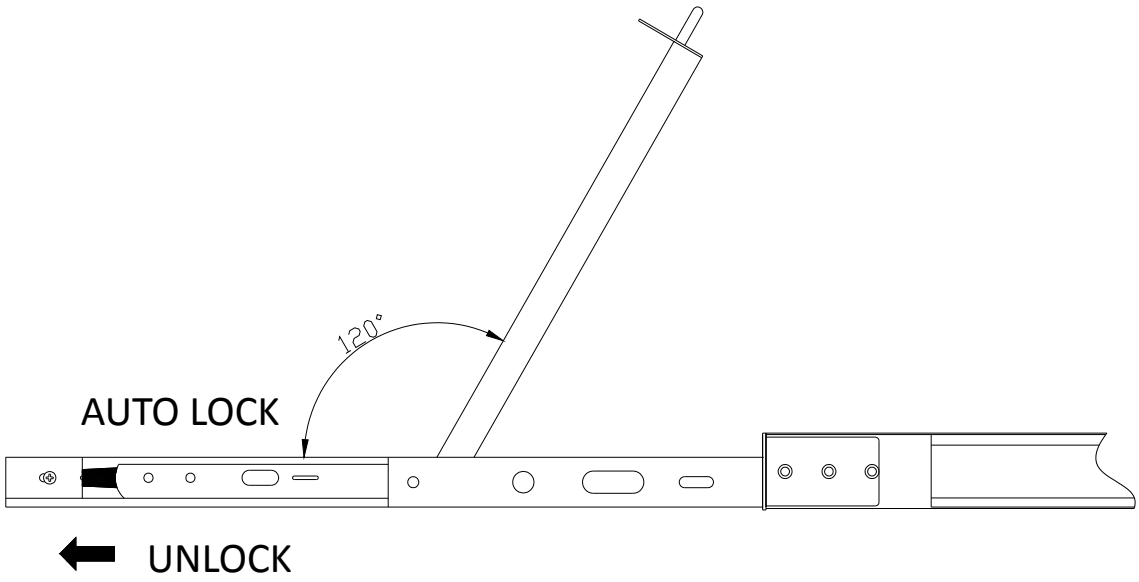

- The screen will automatically pull out the slide after the brake lock device to prevent the random sliding LCD screen components to bring the instability and may cause damage to the user collision. After the brake lock is activated, the LCD screen will limit the operation of pushing the slide rail. If you want to do the push-in operation of the LCD module, the unlocking action must be done first, and the unlocking switch is on both sides of the slide rail. (Please refer to the figure above for the specific operation). After unlocking, the LCD assembly can be pushed into the slide rail.

Note:

1. Push the LCD assembly into the slide, the unlock action and push action should be careful, improper operation may clip your finger.
2. When using the keyboard or mouse, do not use the body to depress the LCD module. Otherwise, it may cause the slide rail to deform or not be able to be pushed into the slide rail

Chapter4

OSD Operation

OSD Introduction

OSD (On Screen Display), provides a menu driven interface to handle the computer switching procedure to provide instant access to any computer on the installation.

OSD Log in

The OSD function provides a two-level (administrator/user) password mechanism. The factory default setting is no need to login password authentication, so you are the first time to open the OSD main menu, no need to enter the login password to enter the OSD main menu screen for the corresponding operation. If you want to add this function, you can enter the OSD menu, in [F6] "SET" option to set the login password is set successfully, the subsequent login requires the correct administrator/user password to enter the OSD menu Interface operation. When you enter the setting options, some functions may need to be edited and modified by the administrator. The default administrator password is admin. You can also modify and change them as needed.

OSD Hot-Key

By default, you can type the [CTRL] key twice to have the OSD menu appear on the screen of the controlled display and see the connection information and status information about the connected computers on the KVM switch.

Note: You can change the keyboard hotkey on the OSD menu according to your needs. This product provides 4 sets of optional OSD menu hotkey combinations. You can select the operation according to your needs. (Please refer to the OSD menu for detailed description.)

OSD Main Menu

Active OSD, following picture will be shown on the screen:

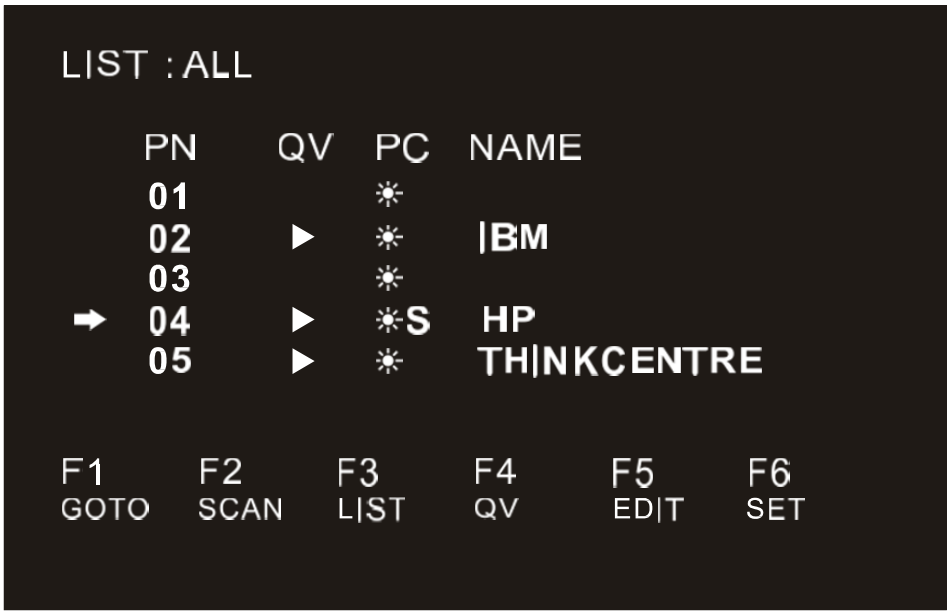

- [F1] --- [F6] at the bottom of the screen is the function setting of OSD menu, and corresponding operation and setting of corresponding function by keyboard.
- After entering the OSD main screen, the port number in the center of the screen is the port number of the selected PC. To move up and down through the list one line at a time, use the [↑] [↓] Arrow Keys, press [Enter] to select the switch port.
- Please press [Esc] to exit the OSD menu interface
- To move up or down a row in the list, use the [↑] [↓] arrow keys. If the number of rows in the list is larger than the number that the screen can display, the screen scrolls.
- When the OSD menu is closed, a small blue window will appear on the screen showing the port number that is currently switched to.

OSD Main Screen Headings

Heading	Explanation
PN	This column lists the port numbers for all the CPU ports on the installation. The simplest method to access a particular computer is to move the highlight bar to it, then press [Enter].
QV	If a port has been selected for Quick View scanning, an arrowhead symbol displays in this column to indicate so.
PC	The computers that are powered on and are on line have an arrowhead symbol in this column to indicate so.
NAME	If a port has been given a name, its name appears in this column.

OSD Function

OSD functions are used to configure and control the OSD. For example, you can: rapidly switch to any port; scan selected ports only; limit the list you wish to view; designate a port as a Quick View Port; create or edit a port name; or make OSD setting adjustments.

To activate the OSD function key:

1. Press any function key [F1] --- [F6] at the bottom of main screen to input the function key.
2. On the sub-menu, move the selection column to the option, and then press the {Enter} key.
3. Press the [Esc] key to return to the previous menu.

F1 GOTO:

Press the [F1] key to start the GOTO function. The GOTO function allows you to switch directly to the connection port by typing the port name or its port number.

1. To use “NAM” method, move highlight bar to “NAME”, press [Enter], input name of a port, then press [Enter] to confirm.

2. To use PN method, move highlight bar to “PN”, press [Enter], input port number, then press [Enter] to switch. If the port number is invalid, it will remind the user to input again.

Note:

1. When keying name, if there is a matching name, the matched name will appear on the screen, just press [Enter] to switch to that port.
2. In the "PN" port input box, only allow the input of numbers, such as the input of other characters are regarded as invalid input, and can hear the equipment issued by the warning tone.

To return to main menu, press [Esc].

F2 SCAN:

The "SCAN" function allows you to perform automatic port scanning of the connected computers. Users can switch ports in order to view the corresponding port computer status.

- The SCAN function can automatically scan from current selected port, the scan interval can be set by users.
- When scanning, a small window on the screen indicates the current port number.
- Press [Space] to stop scanning, and the KVM switches to the port last scanned.

F3 LIST:

The LIST function lets you broaden or narrow the scope of which ports the OSD displays on the main screen.

Many of the OSD functions only operate on the computers that have been selected for listing on the main screen with this function. The choices and their meanings are given in the table below:

Choice	Meaning
ALL	Lists all of the ports on the installation.
QVIEW	Lists only the ports that have been selected as Quick View Ports.
POWERED ON	Lists only the ports that have their attached computers powered on.
POWERED ON + QVIEW	Lists only the ports that have their attached computers powered on and have been selected as Quick View Ports.
QVIEW + NAME	Lists only the ports that have been selected as Quick View Ports and have name.
NAME	Lists only the ports that have names.

Move the highlight bar to the choice you want, then press [enter]. An icon appears before the choice to indicate that it is the currently selected one.
After you make your choice and press [Enter], you return to the OSD main screen with the newly formulated list displayed.

F4 QV:

QV function can select port as Quick View.

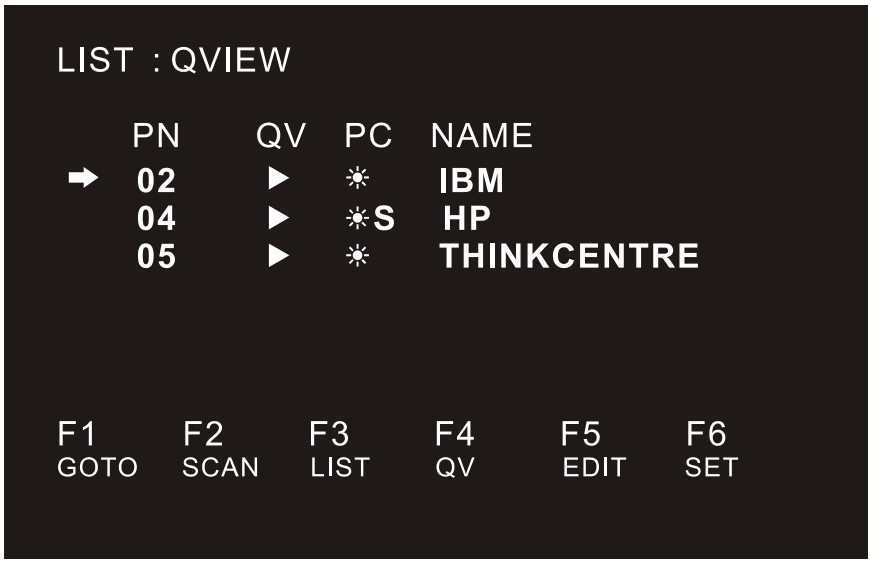

Move the highlight bar to a port; press [F4], an icon of up triangle appears.
Press [F4] again, the icon disappears.

F5 EDIT:

EDIT function creates or edits the name of a port. Press [F5], a pink edit box will appear on the screen. Input name, and then press [Enter], the port is set a name and it will also appear on the screen.

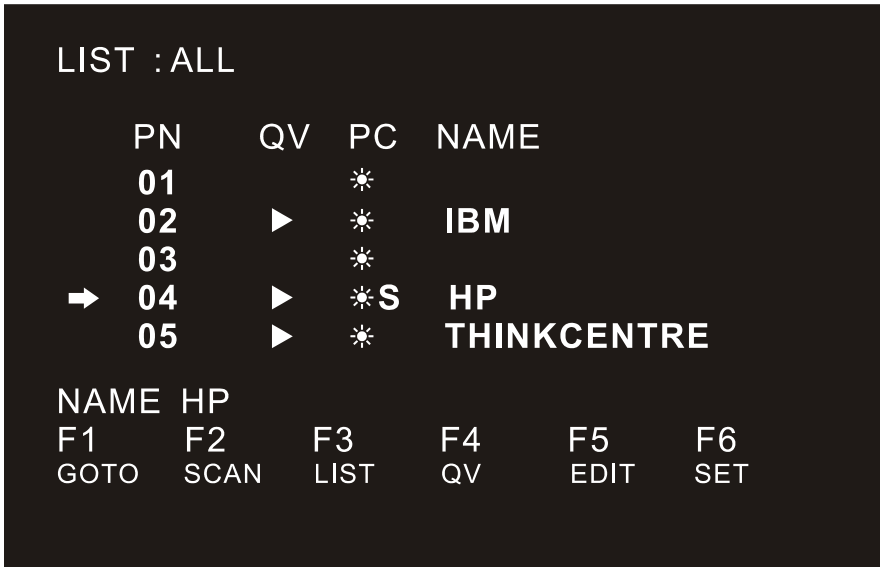

F6 SET:

SET function settings can be set to the administrator and the user to set the OSD menu. The related functions and user rights related settings, such as management settings login password, display mode, switch hotkey adjustment and so on.

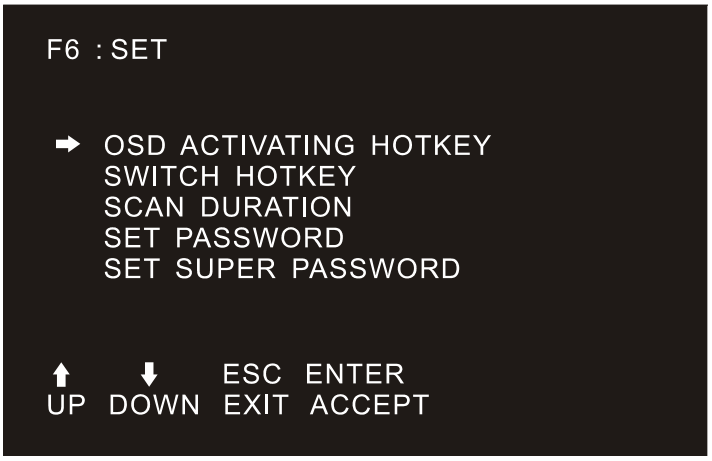

To change your settings:

1. Move the selection column to this option, press [Enter] to enter a setting option.
2. After selecting an item, the sub-menu and the further options provided will appear. To select it, double-click the mouse or move the selection column to the option, and then press the [Enter] key, an icon will appear. Select the option before to indicate that the item has been selected. The settings are described in the following table:

Settings	**Function**
OSD ACTIVATING HOTKEY	OSD Menu Activates hotkey combination selection settings
SWITCH HOTKEY	KVM port switch hot-key combination selection setting
SCAN DURATION	Port scan dwell time setting
SET PASSWORD	User login password settings
SET SUPER PASSWORD	The administrator login password settings
CLEAR THE NAME LIST	Clear the port name setting
RESTORE DEFAULT VALUE	Reset
LOCK CONSOLE	OSD Menu Password Login Function settings

OSD ACTIVATING HOTKEY

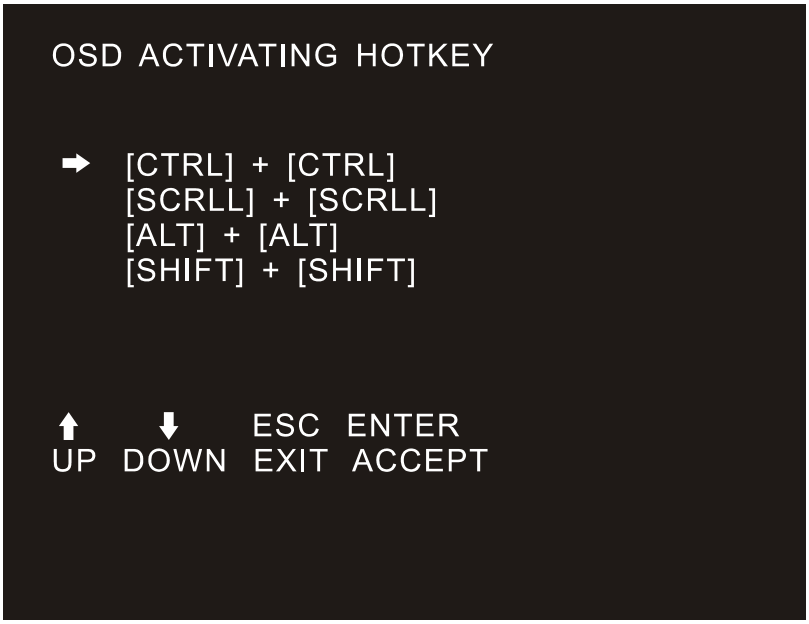

It provides you with four hotkey combinations:
You can use the keyboard [↑] [↓] to move cursor to select, and then press [Enter] key to save. The default is to use [CTRL] [CTRL] as the OSD menu start hotkey.

SWITCH HOTKEY

It provides you with four hotkey combinations:
[SCRLL] [SCRLL] [NUM], [CTRL] [CTRL] [NUM], [ALT] [ALT] [NUM], [SHIFT] [SHIFT] [NUM] You can use the keyboard [↑] [↓] to move cursor to select, and then press [Enter] key to save. The default is to use [SCRLL] [SCRLL] [NUM] as the OSD menu start hotkey.
[NUM] is the numeric keypad of the keyboard. The valid numeric range is [01] - [16].

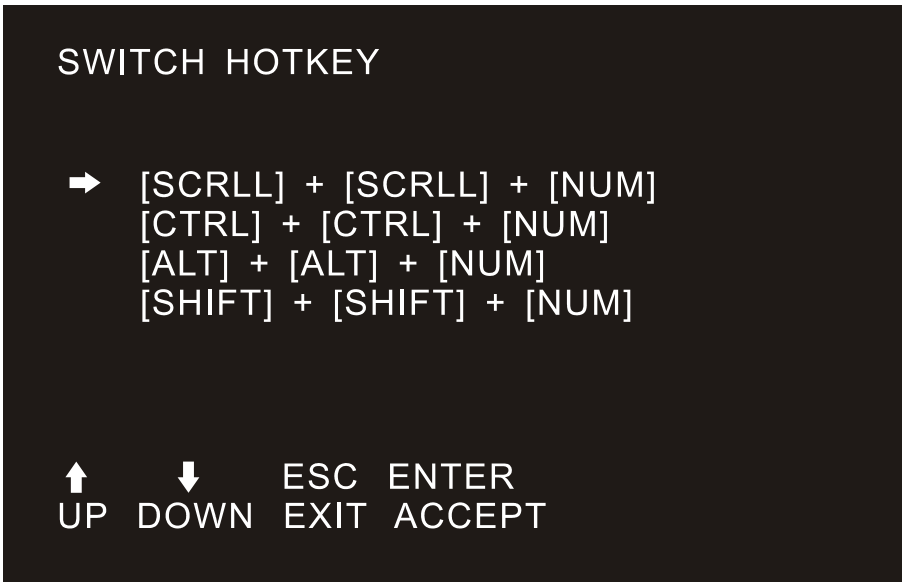

SCAN DURATION

```
SCAN DURATION

     3 SEC
     5 SEC
    10 SEC
    15 SEC
    20 SEC
    30 SEC
➡   40 SEC
⬆    ⬇    ESC  ENTER
UP  DOWN  EXIT  ACCEPT
```

Duration for scanning one port.
Options are 3 seconds, 5 seconds, 10 seconds, 15 seconds, 20 seconds, 30 seconds, 40 seconds, 60 seconds. Move the highlight bar to an option and press [Enter] to select it.

SET PASSWORD

Set new password.
First enter old password, then enter new password and confirm it. The new password is set. If error occurs, the screen will remind users.

SET SUPER PASSWORD

```
F6:SET

    OSD ACTIVATING HOTKEY
    SWITCH HOTKEY
    SCAN DURATION
    SET PASSWORD
➡   SET SUPER PASSWORD

PASSWORD
⬆    ⬇    ESC  ENTER
UP  DOWN  EXIT  ACCEPT
```

When setting the administrator password, you need to enter the correct password. Before new password is updated, input the previous password twice, the new password to take effect

CLEAR THE NAME LIST

This function clears the name of a port in the OSD menu. If you use this function, all the port names will be emptied, so please do it carefully. When doing this, you need to verify the password of the administrator, input [Y] key, then press [Enter] to confirm the operation. To cancel this operation, input [N] key, and then press [Enter] to confirm the cancel operation, or keyboard input [Esc] directly back.

RESTORE DEFAULT VALUE

Restore settings to default value. This setting will make all the OSD menu options to restore the initial settings, so please be careful to do this. When doing this, you need to verify the password of the administrator, input [Y] key, then press [Enter] to confirm the operation. To cancel this operation, input [N] key, and then press [Enter] to confirm the cancel operation, or keyboard input [Esc] directly back.

LOCK CONSOLE

You cannot switch or scan after you lock the console (including switch by push button on the panel or OSD). You need to enter password to set.
Note: After locking the console, you can also unlock the console by this option. It also needs password verification.

(Descriptions of the OSD Menu functions may vary. Refer to the description of each interface KVM switch manual for details.)

Appendix

Safety Instruction

In General

- This product is for indoor use only.
- Please read all the instructions for future reference.
- Follow all the warnings and instructions on the device.
- Do not place this equipment on any unstable surface (such as cart, stand, table, etc.). If this equipment falls, it will cause serious damage.
- Do not use this equipment near water.
- Do not place this equipment near or over the radiator or heating equipment.
- The enclosure is provided with slots for heat dissipation and ventilation. To prevent overheating during operation, do not block or cover the openings.
- Do not place the device on a soft surface (such as a bed, sofa, blanket, etc.). This will block the fan opening and cannot be placed in a sealed environment unless proper ventilation is provided.
- Do not spray any liquid on the device.
- Before cleaning, please unplug the power from the wall socket. Do not use any liquid or foam cleaner. Use a damp cloth to clean it.
- Please use this equipment according to the type of power supply on the label. If you are not sure whether the power supply type is available, please contact your dealer or your local power company.
- This equipment is designed for IT distribution system with 100V ~ 230V phase-to-phase voltage.
- To prevent damage to your device, it is important that all equipment be properly grounded
- Do not place anything on the power cord or cable, and route the power cord and cable routing to avoid tripping over it.
- If the equipment uses an extension cord, make sure that the total capacity of all products using the line does not exceed the current carrying capacity of the line. Ensure that the total current of all products plugged into the wall outlet does not exceed 15A.
- Use a surge suppressor, regulator, or uninterruptible power supply (UPS) to help protect your system from sudden, transient, and reduced power.
- Please fix the system cable and power cord properly, and make sure nothing is pressing on the cable.
- Do not insert objects into the machine through the slots of the housing. There is a risk of exposure to dangerous voltage points or short-circuiting of parts resulting in fire or electric shock.
- Do not attempt to repair the equipment by yourself. Please consult a qualified service person for support.
- If any of the following conditions occur, unplug the unit from the wall outlet and return it to a qualified service representative for repair.
    - The power cord or plug is damaged or worn
    - Liquid is spilled into the unit
    - The device is exposed to rain and water
    - The device has been dropped or the housing has been damaged
    - The function of the device is obviously changed

- The machine can’t be operated normally as instructed by the operating instructions.

◆ Adjustment only for the control functions covered by the operating instructions, and other inappropriate operations may cause damage, requiring more qualified personnel to perform repairs

Cabinet Installation

◆ Before cabinet installation, make sure that the fixing device is securely fastened to the rack and extended to the ground. The weight of the whole rack can be dispersed on the floor. Mount the front and side securing devices in a single rack or the front-end fixtures in combination with multiple racks before starting rack work.

◆ Install from the bottom to up in the cabinet, and install the heaviest things first.

◆ When extending the equipment from the rack, make sure that the rack is stable and stable.

◆ Be careful when releasing the latch by pressing the device rails and sliding the unit into the rack. The track of the slide rail may clip to your finger.

◆ After mounting the device to the rack, carefully spread the rails to the locked position, and then slide the unit into the rack.

◆ Do not overload the AC supply branch circuit that supplies power to the rack. The total load capacity of the rack should not exceed 80% of the branch circuit.

◆ Make sure that all equipment used on the rack - including electrical outlets and other power connectors - is properly grounded.

◆ Make sure you have provided proper airflow for the equipment on the rack.

◆ Make sure that the operating temperature of the rack environment does not exceed the maximum operating temperature set by the manufacturer.

◆ Do not stand on or stand on any other equipment while you are servicing other equipment on the rack. WARNING: Slide/rail (LCD/KVM) mounting equipment cannot be used with support brackets or work areas.

Specification

LCD Module Specifications

Model		DS-72210	DS-72211
LCD Display Assembly	LCD Screen Size Ratio	**17inch4: 3**	**19inch16: 9**
	LCD Screen Type	SXGA TFT-LCD	Wide AHVA TFT-LCD
	Viewing Area	337.920(H) × 270.336(V)	408.96(H) x 230.04(V)
	Resolution	1280x1024@60Hz	1366x768@60Hz
	Support color	16.7M color (RGB 6 bit + Hi_FRC)	16.7Mcolor, True 8 bit
	Contrast	1000: 1 (Typ)	
	Backlight	LED	
	Pixel spacing	0.264x0.297mm 0.294x0.294mm	300*300um
	LEDService life	100,000Hours	
	Nominal Input Voltage	+5.0V	
Keyboard	Keyboard Layout	Ultra-thin US100 key,Stand alone Removable keyboard. (Keyboard language format optional)	
	Compatible	Microsoft Windows XP, WIN7, Server2003, WIN8, WIN10 and above	
	Port	Standard PS/2;USB (Chocolate keyboard)	
	Service life	>1,000,000 times	
Mouse	Mouse Type	Touch Pad Mouse	
	Port	Standard PS/2	
	X/Y resolution	>1000 point/inch, (40x40/mm)	
	Service life	>1,000,000 times	
LED's	Selected	1 x Display	
	Online	16 x Red	
Button	Connection Port Selection	10 x Number Button	
	Enter Selection	1 x ENT Button	
	KVM Reset	1 x RST Button	
Connectors	KVM Module	DB 37PIN	
	Power	1 x DC Jack	

Operating Environment	Operating temperature	-10-50˚C	
	Storage temperature	-20-60˚C	
	Humidity	0-80%RH, No Condensation	
Physical	Housing	Metal, Black	
	Dimension	462.6*445*45mm	
	Weight	6.15	6.07

VGA KVM Module Specification

Type			**1 Port**	**8 Port**	**16 Port**
Model			**DS-72212**	**DS-72213**	**DS-72214**
Computer Connection	Direct Connects		1	8	16
	Maximum Cascade		1	128	256
Computer Port Selection			NA	OSD Menu, Front panel buttons, Hot Key, IP Remote Control (Optional)	
Connectors	Console Connector		DB 37PIN	DB 37PIN DC Jack (Male)	
	PC Connector	KVM Module	1 x VGA DB15, USB/PS/2	8 x VGA DB15, Female Blue	16 x VGA DB15, Female Blue
	KVM Cable		1.2m attached	8x 1.8m	16x 1.8m
	Power		NA	1 x DC Jack (Female)	
	Network Port		NA	1 x RJ45 (Optional)	
Emulation	Keyboard/Mouse		USB, PS/2		
Over IP Expansion			1x IP Link Slot (For DS-51000-1)		
Scan time interval			3, 5, 10, 15, 20, 30, 40, 60s (3s by default)		
Default Hotkey	OSD Hotkey		NA	[Ctrl]+[Ctrl]	
	Switch Hotkey		NA	[Scroll]+[Scroll]+[Num]	
Operating Environment	Operating temperature		-10-50˚C		
	Storage temperature		-20-60˚C		
	Humidity		0-80%RH, No Condensation		
Physical Properties	Housing		Plastic	Metal, Black	
	Dimension		50*77*24.5mm	148.4*445*45mm	
	Weight		0.18kg	3.32kg	4.96kg

CAT5 KVM module Specification

Type			**8 Port**	**16 Port**
Model			**DS-72216**	**DS-72217**
Computer Connection	Direct Connects		8	16
Computer Port Selection			OSD Menu, Front panel buttons, Hot Key, IP Remote Control (Optional)	
Connectors	Console Connection		DB 37PIN DC Jack	
	Computer Connection	Cat5 Dongle	8 x VGA (DB15 Female Blue) + USB (A)	16 x VGA (DB15 Female Blue) + USB (A)
		Switch Module Port	8 x RJ45	16 x RJ45
		Max. Distance	60m	
	Power		1 x DC Jack	
	Network Port		1 x RJ45 (Optional with IP module)	
Emulation	Keyboard/Mouse		USB	
Over IP Expansion			1x IP Link Slot (For DS-51000-1)	
Scan time interval			3, 5, 10, 15, 20, 30, 40, 60s (3s by default)	
Default Hotkey	OSD Hotkey		[Ctrl]+[Ctrl]	
	Switch Hotkey		[Scroll]+[Scroll]+[Num]	
Operating Environment	Operating temperature		-10-50˚C	
	Storage temperature		-20-60˚C	
	Humidity		0-80%RH, No Condensation	
Physical Properties	Housing		Metal, Black	
	Dimension		148.4*445*45mm	
	Weight		2.74kg	3.80kg

Warranty Conditions

The Company shall not be liable for damages up to the amount paid by the Customer for the Products. In addition, the Company does not assume any direct, indirect, special, incidental or consequential damages resulting from the use of this product or the enclosed CD-ROM, documentation, etc…; The Company makes no warranty, express, implied or statutory, regarding the content and use of this document and specifically disclaims any implied warranties of merchantability, fitness for a particular purpose, suitability or fitness for a particular purpose.

This is a Class A product. In home environment, this product may cause radio interference. In this case, the user may be required to take appropriate measures.

Hereby Assmann Electronic GmbH, declares that the Declaration of Conformity is part of the shipping content. If the Declaration of Conformity is missing, you can request it by post under the below mentioned manufacturer address.

www.assmann.com
Assmann Electronic GmbH
Auf dem Schüffel 3
58513 Lüdenscheid
Germany