gorenje

EN GB IE

INSTRUCTIONS FOR USE

OF A BUILT-IN OVEN

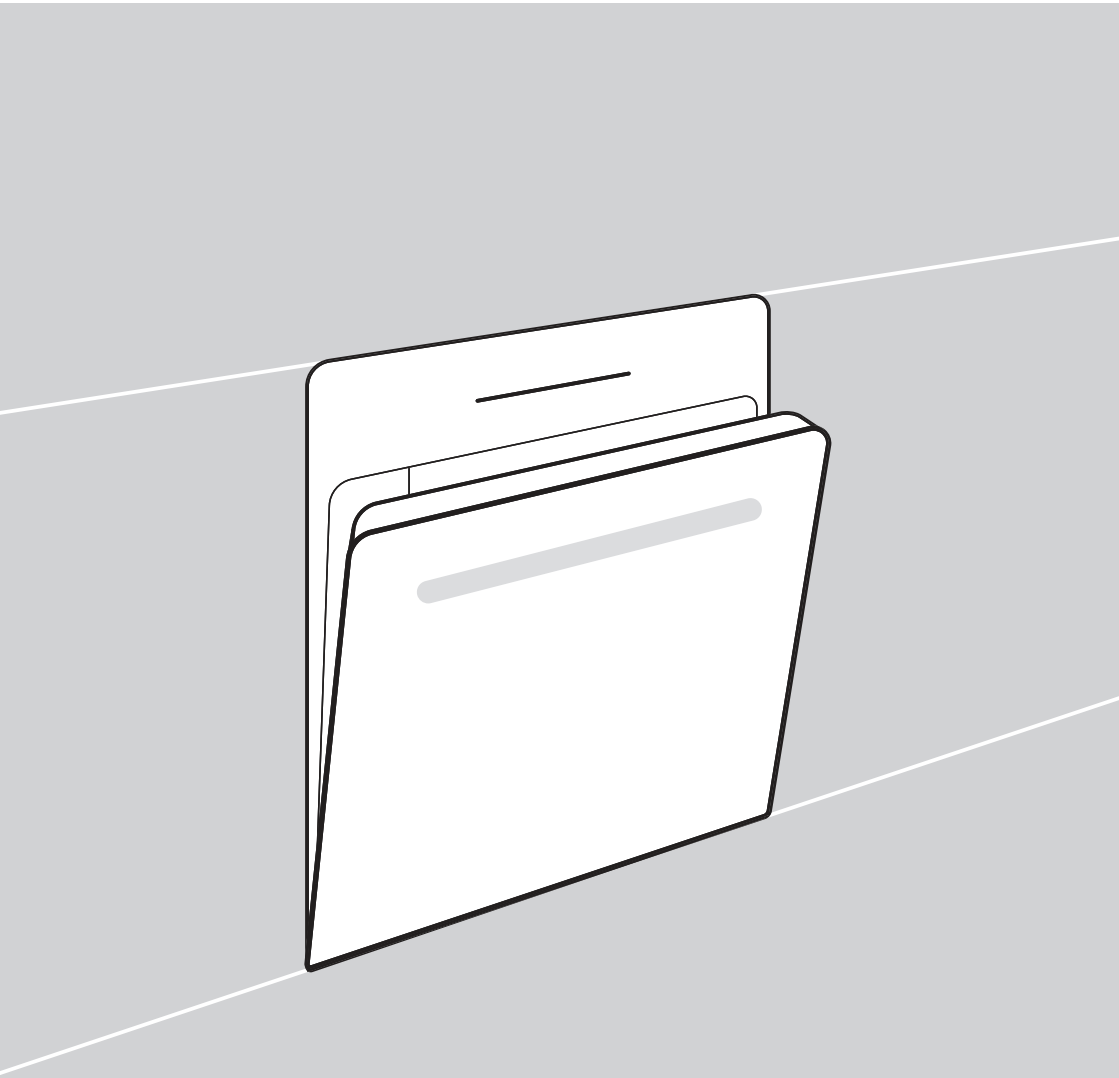

We thank you for your trust and the purchase of our appliance.

This detailed instruction manual is supplied to make the use of this product easier. The instructions should allow you to learn about your new appliance as quickly as possible.

Make sure you have received an undamaged appliance. If you do find transport damage, please contact the seller from which you purchased the appliance, or the regional warehouse from which it was supplied. The telephone number can be found on the invoice or on the delivery note.

Instructions for installation and connection are supplied on a separate sheet.

Carefully read the instructions for use before connecting the appliance. Repair or any warranty claim resulting from incorrect connection or use of the appliance shall not be covered by the warranty.

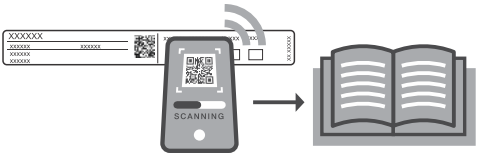

For more detailed instructions and tips, please visit http://www.gorenje.com or scan the QR code on the rating plate.

The following symbols are used throughout the manual and they have the following meanings:

INFORMATION!
Information, advice, tip, or recommendation

WARNING!
Warning – general danger

Contents

Safety precautions **4**

Other important safety warnings **5**

Appliance description **7**
Rating plate – product information 7
Control unit 8

Appliance equipment **9**
Control lights 9
Guides 9
Oven door switch 10
Cooling fan 10
Oven equipment and accessories 10

Before first use **12**

Switching on for the first time **12**

Choosing the settings **13**
PROFESSIONAL MODE (pro bake) 13
AUTOMATIC MODE (auto bake) 21
CHOOSING EXTRA FUNCTIONS (extra bake) 24
Locking keys 24

Starting the cooking process **25**

End of cooking by touching **25**

General settings **27**

General tips and advice for baking **30**

Cooking table **31**

Cooking with a Temperature Probe **35**
Recommended doneness levels for different types of meat 37

Cleaning and maintenance **38**
Using the Aqua Clean program to clean the oven 39
Cleaning the evaporator tray 40
Cleaning the steam system 41
Removing wire and fixed pull-out (extendible) guides 41
Removing and replacing the oven door and glass panes 42
Replacing the bulb 43

Troubleshooting table **44**
Special warnings and fault reporting 44

Disposal **45**

Cooking test **46**

Safety precautions

IMPORTANT SAFETY PRECAUTIONS – CAREFULLY READ THE INSTRUCTIONS AND SAVE THEM FOR FUTURE REFERENCE.

The appliance may only be connected to the power mains by an authorized service technician or expert. Tampering with the appliance or nonprofessional repair thereof may result in risk of severe injury or damage to the product.

Appliance must be connected to fixed wiring which has incorporated means of disconnection. Fixed wiring must be made in accordance with the wiring rules.

The appliance must not be installed behind a decorative door in order to avoid overheating.

If the supply cord is damaged, it must be replaced by the manufacturer, its service agent or similarly qualified persons in order to avoid a hazard (only for appliances supplied with connection cord).

This appliance can be used by children aged 8 years and above, and by persons with reduced physical, sensory or mental capabilities or lack of experience and knowledge, if they have been given supervision or instruction concerning the use of the appliance in a safe way, and if they understand the hazards involved. Children shall not play with the appliance. Cleaning and user maintenance shall not be done by children without supervision.

WARNING: Accessible parts may become hot during use. Young children should be kept away.

WARNING: The appliance and some of its accessible parts may become very hot during use. Care should be taken to avoid touching heating elements. Children less than 8 years of age shall be kept away unless continuously supervised.

The appliance is not intended to be controlled by external timers or separate remote control system.

Only use the temperature probe recommended for use in this oven.

Do not use harsh abrasive cleaners or sharp metal scrapers to clean the oven door glass/ the glass of hinged lids of the hob (as appropriate), since they can scratch the surface, which may result in shattering of the glass.

Do not use steam cleaners or high-pressure cleaners to clean the appliance as this may result in an electric shock.

WARNING: Before replacing the light bulb, make sure the appliance has been disconnected from the mains power, in order to prevent the hazard of an electric shock.

Never pour water directly on the bottom of the oven cavity. Temperature differences could result in damage to the enamel coating.

Other important safety warnings

The appliance is intended for household use. Do not use it for any other purpose, such as room heating, drying of pets or other animals, paper, fabrics, herbs etc. As this may lead to injury or fire hazard.

The appliance may only be connected to the power mains by an authorized service technician or expert. Tampering with the appliance or nonprofessional repair thereof may result in risk of severe injury or damage to the product.

We recommend that (due to appliance weight) at least two persons carry and install the appliance.

Do not lift the appliance by holding it by the door handle.

Oven door hinges may be damaged when under excessive load. Do not stand or sit on the open oven door, and do not lean against it. Also, do not place any heavy objects onto the oven door.

If the power cords of other appliances placed near this appliance get entangled in the oven door, they can be damaged, which in turn can result in a short circuit. Therefore, make sure the power cords of other appliances are always at a safe distance.

Make sure the vents are never covered or obstructed in any other way.

Do not line the oven cavity with aluminium foil, and do not place any baking trays or other cookware on the oven bottom. This would obstruct and reduce air circulation in the oven, slow down the baking process, and destroy the enamel coating.

We recommend you avoid opening the oven door during baking, as this increases power consumption and increases condensate accumulation.

At the end of the baking process, and during baking, be careful when opening the oven door, as there is danger of scalding.

To prevent limescale accumulation, leave the oven door open after baking or using the oven, to allow the oven cavity to cool down to room temperature.

Clean the oven when it has completely cooled down.

Eventual mismatches in colour shades between different appliances or components within a single design line may occur due to various factors, such as different angles under which the appliances are observed, different coloured backgrounds, materials, and room illumination.

Do not use the appliance if it is damaged. Unplug the appliance from the power mains and call an authorized service centre.

The oven can be safely used with or without baking pan guides.

Do not store items in the oven, which could cause danger when the oven is switched on.

The deviation of the daily time display on the screen does not affect the functionality of the appliance and may be due to fluctuations in the frequency of the electrical network.

Before connecting the appliance to the power mains, leave it at room temperature for some time to allow all components to adapt to room temperature. If the oven was stored at a temperature close to freezing point or below it, this could be hazardous to some components, particularly the pump.

Do not operate the appliance in an environment colder than 5 °C. If the appliance is switched on in such conditions, the pump could be damaged.

Do not use distilled water, tap water with high chlorine content, or other similar liquids.

When baking with steam injection, always fully open the oven door when the baking process is completed. If you do not do so, the steam rising from the oven cavity could affect the operation of the control unit.

Only place the evaporating dish in the appliance when baking with a steam injection. When not using the steam injection function, remove it.

Only remove and replace the evaporating tray when the oven has completely cooled down.

WARNING!
Carefully read the instructions for use before connecting the appliance. Repair or any warranty claim resulting from incorrect connection or use of the appliance shall not be covered by the warranty.

Appliance description

INFORMATION!
Appliance functions and equipment depend on the model.

Basic equipment of your appliance includes wire guides, shallow baking tray, and a wire rack.

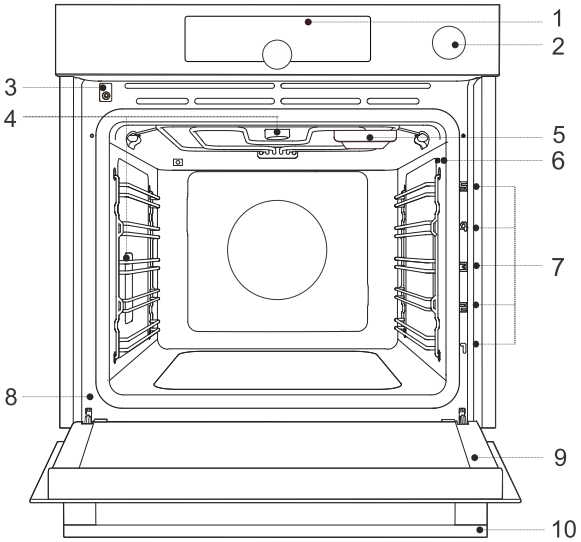

1. Control unit
2. Water tank knob
3. Door switch
4. Lighting
5. Evaporating tray
6. Temperature probe socket
7. Guides – cooking levels
8. Rating plate
9. Oven door
10. Door handle

Rating plate – product information

A rating plate with basic information about the appliance is attached to the edge of the oven.

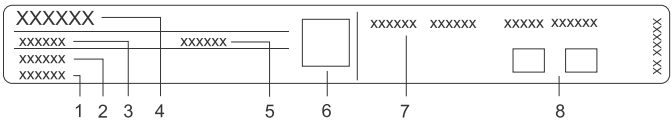

1. Serial number
2. Model
3. Type
4. Brand
5. ID/code
6. QR code (depending on the model)
7. Technical information
8. Compliance labels/symbols

Control unit

(depending on the model)

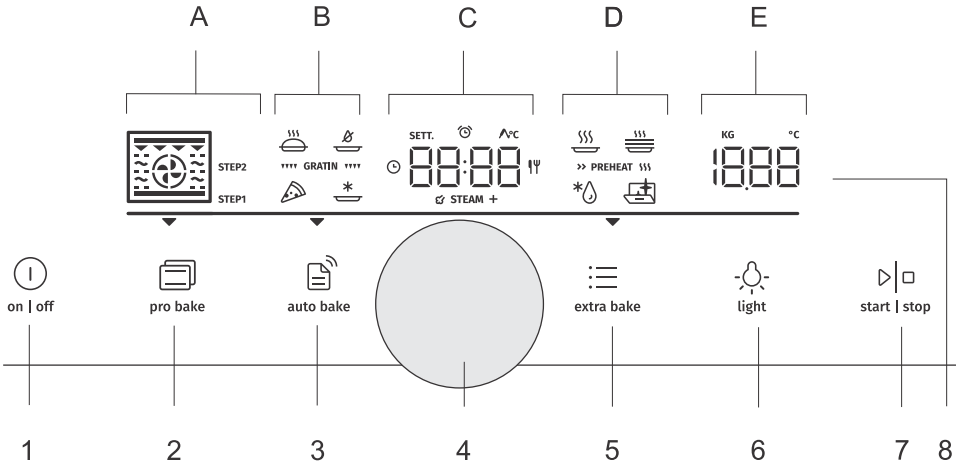

1. on I off key
2. (pro bake) professional mode key
3. (auto bake) automatic mode key
4. Settings selection and confirmation knob
   - rotate the knob to choose a setting
   - press the knob to confirm the setting
5. (extra bake) key for extra functions and general appliance settings
6. (light) key for switching the oven lighting on and off
7. start I stop key for starting or pausing, and confirming settings
8. Display unit:
   A. baking systems, step mode (STEP)
   B. special baking systems, automatic programs, gratins
   C. clock, timer functions, temperature probe, baking time
   D. special programs, preheating
   E. temperature, weight

——— Illuminated part of the line - displays the currently selected field from A to E.

▼ Arrow - displays the selected basic setting (pro bake), (auto bake), (extra bake).

INFORMATION!

For better key response, touch the keys with a large area of your fingertip. Each time you press a key, this will be acknowledged by a short acoustic signal (if the function is available).

Appliance equipment

Control lights

Oven light: oven light is switched on when you open or close the oven door, when you switch on the oven, at the end of the baking process, and when you touch the oven light key on the control unit.

Guides

- The guides allow cooking or baking on 5 rack levels.
- The height levels of guides into which the racks can be inserted shall be counted from bottom up.
- Guide levels 4 and 5 are intended for grilling/broiling.
- When inserting equipment, it should be correctly rotated.

Wire guides

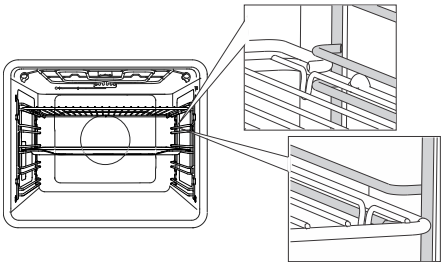

In case of wire guides, always insert the wire rack and the baking tray into the slot between the upper and lower part of each guide level.

Fixed pull-out guides
(depending on the model)

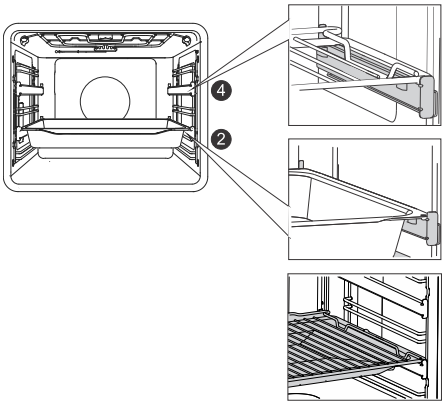

Pull-out guides may be fitted for the 2nd and 4th level.

In case of fixed pull-out guides, place the rack or baking tray onto the guide. You can place the wire rack directly onto a baking tray (shallow or deep all-purpose baking tray) and place both onto the same guide; in this case, the baking tray acts as a drip tray.

Click-on pull-out guides
(depending on the model)

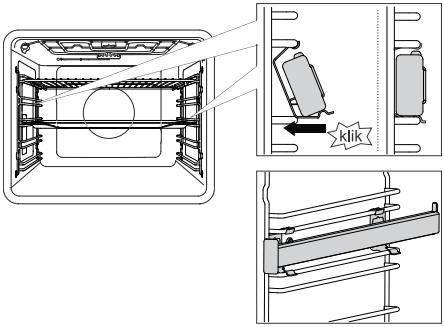

The click-on pull-out guide can be inserted into any space between two wire guides.
Place the guide symmetrically onto the wire guides on the left and the right side of the oven cavity. First, hook the upper clip of the guide under the wire of the wire guide. Then, press the lower clip into the right position until you hear a CLICK.

NOTE: The guides can be attached to any height between two levels of wire guides.

INFORMATION!
The click-on pull-out guides cannot be mounted onto guides with fixed double-level partial extension. They can, however, be mounted on to single-level partially extendible guides, to levels 3–4 and 4–5.

Make sure the pull-out guide is correctly rotated and that it extends outwards, i.e. out from the oven.

Oven door switch
(depending on the model)

If the oven door is opened during oven operation, the switch turns off the heater and fan in the oven cavity. When the door is closed, the switch turns the appliance operation back on.

WARNING!
Using the oven with the door open and the door switch engaged (closed) is not allowed. The oven will signal an error, and it will have to be reset.

Cooling fan
The appliance is fitted with a cooling fan that cools the housing, the door, and the appliance control unit. After the oven is switched off, the cooling fan continues to operate for a short while in order to cool down the oven.

Oven equipment and accessories
(depending on the model)

The **WIRE RACK** is used for grilling/broiling or as support for a pan, baking tray or baking dish with the food you are baking.

INFORMATION!
There is a safety latch on the wire rack. Therefore, the wire rack has to be lifted slightly at the front when pulling it out from the oven.

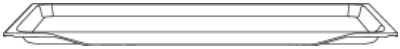

SHALLOW BAKING TRAY is used for flat and small pastry. It can also be used as a drip tray.

WARNING!
The shallow baking tray may deform as it heats up in the oven. Once it cools down, it returns to the initial shape. Such deformation does not affect its function.

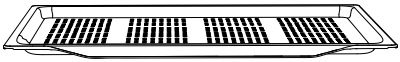

The **SHALLOW PERFORATED BAKING TRAY** is used for cooking with systems that feature steam injection and for air frying. The perforation improves airflow around the food for a crispier crust.
When cooking food with high liquid content (water, fat), place the shallow baking tray or all-purpose deep baking tray one rack lower to serve as drip tray.

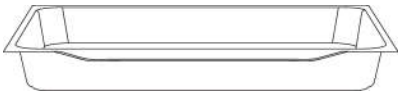

The **ALL-AROUND DEEP BAKING TRAY** is used for roasting vegetables and baking moist pastry. It can also be used as a drip tray.

INFORMATION!
Never insert the all-purpose (or universal) deep baking tray into the first guide during baking.

Temperature **PROBE (BAKESENSOR)**.

WARNING!
The appliance and some of the accessible parts tend to heat up during cooking.

Before first use

- Remove oven accessories and any packaging (cardboard, polystyrene foam) from the oven.
- Wipe the oven accessories and interior with a damp cloth. Do not use abrasive or aggressive cloths or cleaners.
- Heat an empty oven for approximately one hour with the top and bottom heater system at a temperature of 250 °C. The characteristic "new oven scent" will be released; therefore, ventilate the room thoroughly during this process.

Switching on for the first time

After connecting your appliance or after an extended power outage, 12:00 will flash on the display.

First, choose and confirm the following basic settings.

INFORMATION!
Change them by rotating the KNOB. To confirm the desired setting, press the KNOB or touch the **start | stop** key.

1. CLOCK SETTING
Set the clock/time of day. First, set and confirm the minutes; then set and confirm the hours.

INFORMATION!
To set or adjust the clock later on, see chapter Extra functions.

2. ACOUSTIC SIGNAL VOLUME
Medium volume is the default setting. The sign **VoL** and the currently set value for the acoustic signal volume will appear on the display unit. Rotate the KNOB to increase or decrease the key volume.

3. DISPLAY DIMMER
Medium light intensity is the default setting. The sign **brht** and the currently set value for the display light intensity will appear on the display unit. Rotate the KNOB to increase or decrease lighting intensity.

After you confirm the selected settings, the clock will appear on the display unit. The appliance is in standby mode.

Choosing the settings

The interface allows choosing several operating modes:

- Professional mode (pro bake)
- Automatic mode (auto bake)
- Extra functions (extra bake)
- Step program (STEP) in the professional mode (pro bake)
- Automatic programs in automatic mode (auto bake)

INFORMATION!

- Rotate the KNOB to scroll through the settings.
- First, confirm the selected setting by pressing the KNOB; then, change the setting.
- Confirm each setting by pressing the KNOB.
- A line and an arrow indicate the location of the parameter that you are looking to set.
- Touch the **start | stop** key to start the program.
- Operation of the **on | off** key:
  - brief touch: switch the oven on or off, stop the baking process or function.
  – long touch: the oven switches to low power consumption (power saving) mode.
  No key or KNOB are active, except for the **on | off** key. To switch on the oven, long-touch this key.

pro bake

PROFESSIONAL MODE (pro bake)

This function allows setting the baking parameters – baking system, temperature, fast preheating, and baking time – freely, at the user's discretion.

Touch the **pro bake** key and set the following:

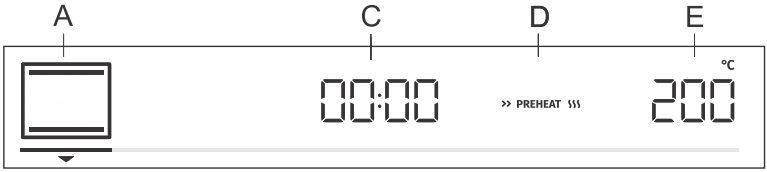

A baking system
C program duration
D preheating
E temperature

Additionally, the following can be set:
- timer functions (see chapter Timer functions)
- step baking mode (STEP) (see chapter Step program)
- gratin (GRATIN) (see chapter Starting the cooking process)

Fast preheat

Use the fast preheating function if you wish to heat the oven to the desired temperature as quickly as possible.
To activate fast preheating, rotate the KNOB to the setting PREHEAT (see image, label D). Confirm the selection. Rotate the KNOB to select the fully lit sign and confirm it. The function is now activated.

When the selected temperature is reached, the preheating process stops and an acoustic signal is emitted. **door** will appear on the display unit. Open the door and insert the food. The program will automatically continue baking with selected settings.

INFORMATION!
When the quick preheating function is activated, delayed start function cannot be used.
For systems with steam injection, preheating cannot be set.

CHOOSING THE COOKING SYSTEM

Symbol	Use
	HOT AIR Hot air allows better flow of hot air around the food. This way, it dries out the surface and creates a thicker crust. Use this system to cook meat, pastry and vegetables, and to dry food on a single rack or multiple racks simultaneously.
	PIZZA SYSTEM This system is optimal for baking homemade pizza and pastry with higher water content. Use it to bake on a single rack, when you want the food to be done faster and to be crunchy.
	INTENSIVE BAKING This cooking method results in a crunchy crust without added fat. This is a healthy version of fast-food frying, resulting in lower calorie content. Suitable for smaller cuts of meat, fish, vegetables, and frozen products ready for frying (French fries, chicken nuggets).
	GRILL WITH HOT AIR Hot air allows better flow of hot air around the food. This will dry out the surface. In combination with the grill heater/broiler, this will also result in a more intensive colour. For faster baking of meat and vegetables.
	TURBO BAKE For dishes where even crispiness from all sides is desirable. The system is also suitable as the first step in the step baking mode, as it allows quick browning of the surface in the first stage and slow baking in the second stage. The meat will be juicy with a nicely browned crust.
	LARGE GRILL Use this system to grill large amounts of flat-shaped food like toast, open sandwiches, grill sausages, steaks, fish, skewers etc., as well as for cooking au gratin and for browning the crust. The heaters mounted on the top of the oven cavity evenly heat the entire surface. Maximum allowed temperature: 240 °C
	TOP AND BOTTOM HEATER Use this system for conventional baking on a single rack, making soufflés, and baking at low temperatures (slow cooking).
	GENTLE BAKING For gentle and controlled slow cooking of delicate food (soft cuts of meat) and baking pastry with a crunchy bottom.
	TOP AND BOTTOM HEATER WITH FAN For even baking of food on a single rack, and for making soufflés.
	LARGE GRILL WITH FAN For roasting poultry and larger cuts of meat under a broiler.

Table continued from last page

Symbol	Use	
	LARGE GRILL AND BOTTOM HEATER For faster baking on a single rack and for crisply browning the top of your pastry.	
	GRILL WITH BOTTOM HEATER AND FAN For optimum baking of yeast-leavened dough, all types of bread, and for preservation.	
STEAM +	**AIR FRY WITH STEAM**	The addition of steam cooks the surface better and creates a crunchy crust. The higher moisture level in the appliance helps the surface of sponges and cakes to dry out less, to become more risen and soft, and to become shinier. The added steam will make the dish less dry. This function operates in a temperature range above 150 °C.
STEAM +	**TOP AND BOTTOM HEATER WITH FAN AND STEAM**	
STEAM +	**LARGE GRILL WITH FAN AND STEAM**	

Touch the **start | stop** key to start the cooking process. Selected settings will appear on display unit.

TIMER FUNCTIONS

Rotate the KNOB to select the timer functions.

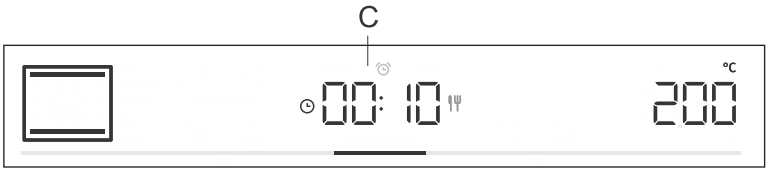

Symbol	Description	Use
	Baking time	In this mode, you can specify the duration of operation for the oven.
	Egg timer	The independent alarm operates independently of the oven operation. After the set time has expired, the appliance does not turn on or off automatically.
	Delayed end	Use this mode when you want the food in the oven to start cooking with a time delay. Enter the duration and desired end time of cooking. The appliance starts automatically and ends its operation at the desired time.

Setting the cooking time

In this mode, you can specify the duration of oven operation (cooking time).

The display shows for the duration of operation. Rotate the KNOB to set the desired operating time. Confirm the setting by pressing the KNOB.

Touch the **start | stop** key to start baking.

Minute minder setting

The minute minder can be used independently of oven operation. The longest possible setting is 24 hours. During the last minute, the minute minder is displayed in seconds.

Rotate the KNOB to select the symbol and confirm your setting. Rotate the KNOB and set the minute minder duration. Confirm the setting by pressing on the KNOB.

Setting delayed end

INFORMATION!
Delayed start is not possible when the preheating function is activated.

Use this function when you wish to start cooking the food in the oven after a certain period of time. Place the food into the oven, then set the system and temperature. Then, set the program duration and the time when you wish your food done.

Example:
Current time: 12:00 (noon)
Cooking time: 2 hours
End of cooking: at 18:00 (6 p.m.)

The cooking duration symbol will appear on the display unit. Choose the setting and confirm it by pressing the KNOB (in our case, 2:00). Press the KNOB again and rotate it to select the symbol . Confirm and set the time when you wish your food to be done (in our case, this is 18:00, or 6 p.m.). Desired cooking end time will appear on the display unit (18:00). Confirm the setting by pressing on the KNOB.

Touch the **start | stop** key to start baking.

While waiting to be activated, the oven switches to a partial stand-by (the display unit goes dark). The oven will switch on with the selected settings automatically (in our case at 16:00, or 4 p.m.). The oven will switch off at the set time (in our case, this is 18:00, or 6 p.m.).

INFORMATION!
Cooking end time and the clock will alternate on the display unit.

After the set time has expired, the oven stops working automatically. The display will show **End**. An acoustic signal will be heard which you may turn off by touching any key. After one minute, the acoustic signal will be switched off automatically.

WARNING!
This function is not suitable for food requiring fast preheating.

Perishable food should not be kept in the oven for a long time. Before using this mode, check whether the clock on the appliance is accurately set.

INFORMATION!
The select timer function can be reset to 00:00 by long-pressing the KNOB.

STEP PROGRAM

This function allows baking in two steps or stages (two consecutive baking steps are combined in a single cooking process).

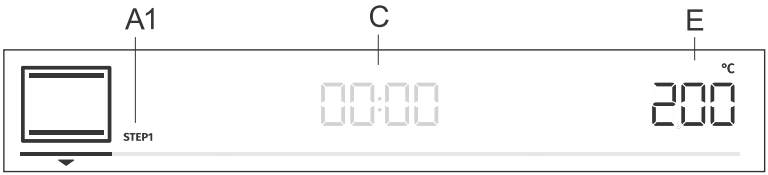

A1 first cooking step STEP1, (STEP2)
C program duration/end of program (see chapter Timer Functions)
E temperature

Step: STEP1
In the **pro bake** mode, set the baking system and temperature. You can also choose the fast preheating function. Then, set the baking duration for STEP1 (see chapter Timer Functions). Confirm the setting by pressing on the KNOB.

INFORMATION!
In STEP1, you can set the delayed start; however, if you do so, you cannot activate fast preheating.

Step: STEP2
Press and hold the **pro bake** key. STEP2 (second cooking step) will appear on the display unit (the first one has already been set). Set the baking system, temperature, and duration. Confirm the setting by pressing on the KNOB.

INFORMATION!
Steam injection systems cannot be set in STEP2.

If you wish, you can also modify STEP1 or STEP2 before starting them.
Touch the **pro bake** key and select STEP1. Now you can change the settings. Then, do the same for STEP2.
To delete the stem mode, press and hold the **pro bake** key.

Touch the **start | stop** key to start baking. The oven first starts to operate with the settings selected for STEP1. When the STEP1 is done, STEP2 is activated.

STEAM INJECTION DURING BAKING

Steam injection results in better browning and a crunchier crust.
Water from the tank drips in a controlled manner into a tray next to upper heaters. This way, just the right amount of steam is generated, resulting in better browning and crunchier crust, while the crumb or core remains springy and fluffy. We recommend using steam injection when baking bread, fresh rolls, sponge rolls, cakes, as well as smaller cuts of poultry and vegetables.

Steam injection during cooking can be used with the following systems: , , . In addition to the system, the display also shows STEAM +

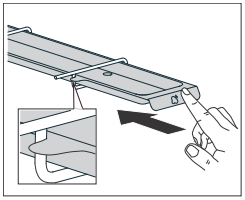

1. Selecting the function
Insert the evaporating dish on the right side, under the top of the oven cavity.
Press the key **pro bake** and set:

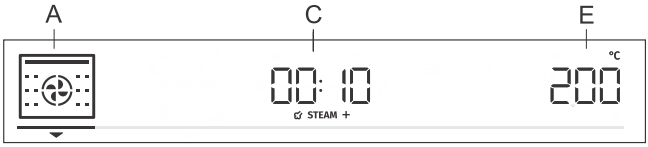

A cooking system
C programme duration
E temperature

INFORMATION!
This function operates in a temperature range between 150-250 °C.

Preheating in systems with steam injection cannot be set. The corresponding steam effect is achieved if the function is switched on while the oven is still cold.

2. Switching on the function and filling the water tank
Start cooking by pressing **start | stop**.
The display will show **Fill**. Fill the water tank (see chapter Filling the water tank below), then press the KNOB to confirm.

INFORMATION!
While this function is active, you may hear the sound of the pump, which is a part of normal appliance operation.

3. Switching off the function, finishing the cooking process and cleaning the water tank

If there is leftover water in the tank after cooking, the display will show **UnFiL** when the oven cools down, meaning that you should empty the water tank.

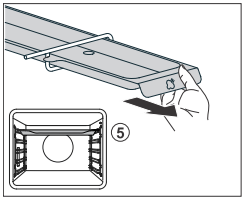

Remove food from the oven.

To drain the water from the tank immediately, remove the evaporating dish and insert an all-purpose deep baking tray on the 5th level. Turn the KNOB and select **YES**. The process of emptying the water from the tank begins. When the process is complete, remove the baking tray with water from the oven and wipe the oven dry.

If you want to empty the water tank later, select **No** (see chapter Selecting general settings).

INFORMATION!
If, when the display shows **UnFiL**, you do not select **YES**, the warning will be displayed again the next time you use the oven.

During oven heating, the evaporating tray may deform, but this does not affect its function.

Filling the water tank

The water tank allows for independent water supply to the steam oven. Water tank capacity is approximately 1.3 dl.

Always fill the tank with clean tap water or bottled water without additives. Water poured into the water tank should be at room temperature, i.e. approximately 20 °C (+/– 10 °C).

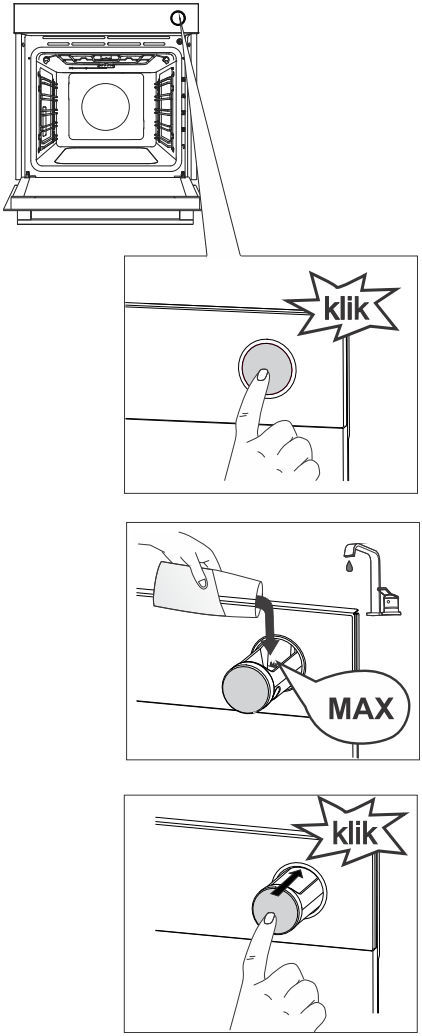

1 Remove the water tank from the housing by pressing the knob. When you press the knob, the tank jumps out.

INFORMATION!
The water tank cannot be removed from the appliance.

2 Pour water up to the **MAX** mark on the water tank (sufficient for the entire cooking process).

3 Press the water tank back into the housing as far as it will go (it will click into place).

WARNING!
If you fail to observe the MAX mark on the water tank and add too much water, the excessive water may flow out through a slot between the water tank lid and the water tank, and drip to the floor.

Do not use distilled water, tap water with high chlorine content, or other similar liquids. Use only fresh tap water, softened water or non-carbonated mineral water.

auto bake AUTOMATIC MODE (auto bake)

In this mode, you may choose between special baking systems or automatic programs (preset programs for particular types of food).

Special baking systems

Touch the **auto bake** key and set the following:

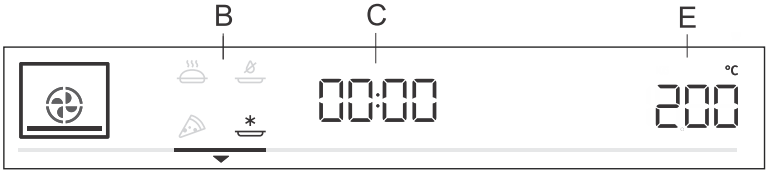

B special baking systems
C program duration (see chapter Timer functions)
E temperature

Rotate the KNOB and choose your settings. Preset values will be displayed: You can change the temperature and program duration.

Symbol	Use
	BAKING FROZEN FOOD [1] This method allows baking frozen food in a shorter period of time without pre-heating. Optimum for pre-baked frozen products (bakery products, croissants, lasagne, French fries, chicken nuggets), meat and vegetables.
	PIZZA SYSTEM [1] This system is optimal for baking homemade pizza and pastry with higher water content. Use it to bake on a single rack, when you want the food to be done faster and to be crunchy.
	SLOW BAKING [2] For gentle, slow and even cooking of meat, fish and pastry on a single rack. This cooking method will leave the meat with a higher water content, making it juicier and more tender, while pastry will be evenly browned/baked. This system is used in the temperature range between 140 °C and 220 °C.
	AIR FRY [1] This cooking method gives the food a crispy crust, without added fat. It is a healthy version of "fast food" with a lower calorie content. Suitable for small cuts of meat, fish, vegetables and pre-cooked frozen products (fries, chicken medallions).

[1] *In these systems, it is possible to use the gratin function (see chapter Starting the cooking process).*

[2] *This function is used for determining the energy efficiency class pursuant to the EN 60350-1 standard.*

Fast preheat

Cooking procedures for some dishes in the auto bake mode also include the fast preheating function. The sign will be fully lit. When the selected temperature is reached, the preheating process stops and an acoustic signal is emitted. **door** will appear on the display unit. Open the door and insert the food. The program will automatically continue baking with selected settings.

INFORMATION!
When the fast preheat function is activated, delayed start function cannot be used.

Automatic programs

In the automatic mode (auto bake), you may choose between numerous automatic programs (the appliance will recommend the optimum cooking method, temperature, and cooking duration depending on the type of food specified).

Press and hold the (auto bake) key to display the automatic programs on the display unit (see table). Where possible, you can also set the weight of the food.
Confirm your setting by pressing the KNOB. Touch the **start | stop** key to start baking. Preset values will appear on the display unit.

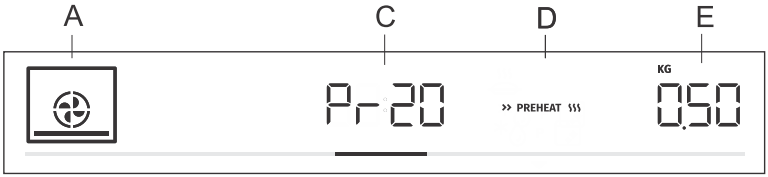

A baking system
C automatic program indication/program duration
D fast preheating
E selected amount

Indication	Program name	Equipment	Level	Preheating	Turning
Pr01	**piped cookies**	shallow baking tray	3	yes	no
Pr02	**cupcakes**	shallow baking tray	3	yes	no
Pr03	**sponge cake**	baking pan/dish on wire rack	2	yes	no
Pr04	**yeast-leavened small pastry**	shallow baking tray	2	yes	no
Pr05	**puff pastry**	shallow baking tray	2	yes	no
Pr06	**apple pie**	baking pan/dish on wire rack	2	no	no
Pr07	**apple strudel**	shallow baking tray	2	no	no
Pr08	**chocolate soufflé**	baking pan/dish on wire rack	3	yes	no
Pr09	**rising and proofing**	shallow baking tray	2	no	no
Pr10	**bread**	shallow baking tray	2	no	no
Pr11	**pork roast**	small baking dish on wire rack	2	no	no
Pr12	**roasted beef**	small baking dish on wire rack	2	no	no
Pr13	**poultry – whole**	wire rack with a drip tray	2	no	after 2/3 of cooking time

Table continued from last page

Indication	Program name	Equipment	Level	Preheating	Turning
Pr14	**poultry – smaller pieces**	wire rack with a drip tray	3	no	after 2/3 of cooking time
Pr15	**meat loaf**	baking pan/dish on wire rack	2	no	no
Pr16	**oven-baked beef steak**	wire rack with a drip tray	4	no	after 2/3 of cooking time
Pr17	**meat – slow cooking**	small baking dish on wire rack	2	no	no
Pr18	**baked/grilled fish**	wire rack with a drip tray	4	no	after 2/3 of cooking time
Pr19	**baked potatoes – wedges**	all-purpose deep baking tray	3	no	no
Pr20	**Vegetable soufflé**	baking pan/dish on wire rack	2	no	no
Pr21	**lasagne**	baking pan/dish on wire rack	2	no	no
Pr22	**homemade pizza**	shallow baking tray	1	yes	no

INFORMATION!
Gratin function can be used with some automatic programs (see chapter Starting the cooking process).

extra bake

CHOOSING EXTRA FUNCTIONS (extra bake)

Touch the **extra bake** key to display extra functions with their respective preset values on the display unit.

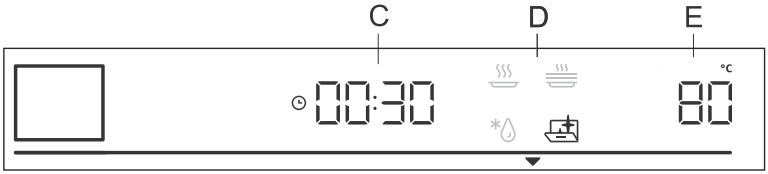

C cooking duration
D program
E preset temperature

Rotate the KNOB and select the program. Preset values will be displayed: Some programs allow setting the temperature and cooking time.

INFORMATION!
Rotate the KNOB to scroll through the programs. Confirm each setting by pressing the KNOB.

Aqua clean
This program allows easy removal of stains from the oven (see chapter Cleaning and Maintenance.)

Defrosting
Use this function to slowly defrost frozen food (cakes, pastry, bread, rolls, and deep-frozen fruit).
Halfway through the defrost time, the pieces should be turned over, stirred and separated if they were frozen together.

Reheating
This is used to keep warm the food that has already been cooked. You may set the temperature and reheating start and end time.

Plate warming
Use this function to reheat your dinnerware (plates, cups) before serving food in it to keep the food warm longer. You may set the temperature and reheating start and end time.

Locking keys

To activate the child lock, press and hold (for 5 seconds) the light key . **Loc** will appear on the display unit. When you long-press the light key again, the child lock is deactivated.

- If the lock is activated with no timer function engaged (only clock is displayed), then the oven will not operate.

- If the child lock is activated after a timer function has been set, then the oven will operate normally; however, it will not be possible to change the settings.
- When the child lock is activated, cooking or baking systems (modes) or additional functions cannot be changed. The cooking/baking/roasting process can only be stopped or switched off.
- Child lock will remain active after the oven is switched off. To select a new system, the child lock must first be deactivated.

Starting the cooking process

Start the cooking process by pressing the **start | stop** key.
Until the set temperature is reached for the first time, the current and the set temperature will alternate on the display unit. The temperature symbol flashes at first. When the desired temperature is reached, it goes off.

INFORMATION!
If no timer function is selected, cooking time will appear on the display unit. A short acoustic signal is emitted when the oven reaches the selected temperature.

▾▾▾ GRATIN ▾▾▾

Extra gratin
You may only activate this function 10 minutes after the start of the cooking process (the symbol ▾▾▾ GRATIN ▾▾▾ will appear on the display unit).
Press the KNOB to open settings. Rotate the KNOB to the sign ▾▾▾ GRATIN ▾▾▾ and confirm your selection. Rotate the KNOB again and select the fully lit sign. Confirm your selection. The function is now activated. Cooking time of 10 minutes (10:00) will appear on the display unit.
To change the duration, press on the KNOB twice and rotate it to adjust the time (max. 30 min). Confirm your selection.
The function is used in the last stage of the cooking process when you add sauce/wet rub or dry rub onto the food, or when you wish to additionally brown the crust. A golden-brown crust will form on the dish during the gratin process, which protects the food from drying out, while also imparting a more pleasant appearance and better flavour.

INFORMATION!
The function can also be switched off while it is in progress. Rotate the KNOB to setting ▾▾▾ GRATIN ▾▾▾ . Choose the dimmed sign and confirm it by pressing on the KNOB.

End of cooking by touching

Touch the **start | stop** key to stop the operation. **End** appears on display unit and an acoustic signal is emitted. After three minutes, the clock will appear on the display unit.

INFORMATION!

After the operation is completed, all timer settings are also stopped and deleted, except for the egg timer. Time of day (clock) will be displayed. The cooling fan will continue to operate for a while.

After the use of the oven, some water may be left in the condensate channel (underneath the door). Wipe the channel with a sponge or a cloth.

General settings

Press and hold the **extra bake** key. **SEtt** will appear on the display unit for a few seconds. Then, the general settings menu will appear.

INFORMATION!
Rotate the KNOB to scroll through the settings. Confirm each setting by pressing the KNOB or the **start | stop** key.

Clock display
Rotate the KNOB to set the clock. **CLoc** will appear on the display unit. After confirming, you can choose between the 12h and 24h clock display. Confirm, then set the clock/time of day. First, set the minutes. Confirm, and then set the hours and confirm again.

Acoustic signal volume
Choose between three acoustic signal volume levels. Rotate the KNOB to choose the **VoL** setting. Confirm the setting and set the volume. There are four available volume levels (zero bars – OFF, one, two or three bars).

Display illumination
Choose between three levels of display light intensity. Rotate the KNOB to select the **brht** setting. Confirm your selection and choose lower or higher intensity. There are three available illumination levels (one, two or three bars).

Display unit – night mode
This function will automatically dim the display (switch from high to low display illumination level) during night time (8:00 p.m. to 6:00 a.m.). Choose the **nGht** setting. Rotate the KNOB to switch On or OFF.

Standby
This function switches the clock display on or off. Select the **hidE** setting. Rotate the KNOB to switch On or OFF.

Automatic fast preheating
This function allows automatic addition of fast preheating to the baking systems that allow it.
Rotate the KNOB to select the **Auto** setting. Choose On or OFF.

Sabbath
The Sabbath function allows keeping the food warm in the oven without having to switch the oven on or off.
Rotate the KNOB to select **SAbb**. Choose On or OFF.
Set the duration (between 24 and 72 hours) and temperature. Confirm each setting by pressing the KNOB.
If you wish the oven light to be on all the time, switch it on by touching the symbol.
Touch the **start | stop** key to start the countdown. **SAbb** will appear on the display unit.
All sounds and operation will be deactivated, except for the **on | off** key.

INFORMATION!
In case of a power outage, the Sabbath mode will be deactivated and the oven will return to the initial state.

Factory settings
This function allows resetting the appliance to factory settings. **FAct** will appear on the display unit. Rotate the KNOB to select rES. Hold the **start I stop** until the end of animation to confirm.

Water hardness
Rotate the KNOB to choose between five water hardness levels. The default setting is level 5.

Whr 1 is the lowest water hardness level.
Whr 5 is the highest water hardness level.

Emptying the water tank
This function allows the water tank to be emptied after cooking has finished in cases where you have used the addition of steam during cooking. The display will show **UnFiL**. Rotate the KNOB to select and confirm No to exit the setting.
To drain the water from the tank, first remove the food from the oven. Remove the evaporating dish and insert an all-purpose deep baking tray on the 5th level. On the display, select and confirm YES. The process of emptying the water tank will begin. When the process is complete, remove the baking tray with water from the oven and wipe the oven dry.

Descaling
You can activate the descaling function yourself or it will be suggested by the oven after a certain number of cycles of using the steam injection function (the display shows **dEcL**).
To turn on the function rotate the KNOB and select YES, and to turn it off select OFF (see chapter Cleaning the steam system).

WARNING!

After a power outage or after the appliance is switched off, additional function settings will remain stored for no more than a few minutes. Then, all settings, except for the acoustic signal volume and display dimmer will be reset to factory defaults.

General tips and advice for baking

- Remove all unnecessary equipment from the oven during baking
- Use equipment made of heat-resistant non-reflective materials (supplied baking trays and dishes, enamel-coated cookware, tempered glass cookware). Bright-coloured materials (stainless steel or aluminium) materials reflect heat. As a result, thermal processing of food in them is less effective.
- Always insert the baking sheets and trays to the end of the guides. When baking on the wire rack, place the baking dishes or trays in the middle of the rack.
- For optimum food preparation, we recommend observing the guidelines specified in the cooking table. Choose the lower specified temperature and the shortest specified cooking time. When this time expires, check the results and then adjust the settings as necessary.
- Unless it is absolutely necessary, do not open the oven door during baking.
- Do not place the baking trays directly onto the oven cavity bottom.
- Do not use the all-purpose deep baking tray on the 1st guide level while the appliance is operating.
- Do not cover the oven cavity bottom or the wire rack with aluminium foil.
- With longer cooking programs, you can switch off the oven approximately 10 minutes before the end of cooking time to make use of the accumulated heat.
- Always place the baking dishes onto the wire rack.
- When baking on several levels at the same time, insert the all-purpose deep baking tray into the lower level.
- When cooking according to recipes from older cookbooks, use the bottom and top heater system (as in conventional ovens) and set the temperature 10 °C lower than specified in the recipe.
- If you are using parchment paper, make sure it is resistant to high-temperatures. Always trim it accordingly. Parchment paper prevents the food from sticking to the baking tray and makes it easier to remove the food from the baking tray.
- When cooking larger cuts of meat or pastry with higher water content, a lot of steam will be generated inside the oven, which in turn may condense on the oven door. This is a normal phenomenon which will not affect the operation of the appliance. After the cooking process, wipe the door and the door glass dry.
- When baking directly on the wire rack, insert the all-purpose deep tray one level lower to serve as a drip tray.

Fast preheating of the oven: Only preheat the oven if required by the recipe of in the tables in these instructions for use. If you are using the fast preheating function, do not insert the food into the oven until the oven is fully heated. Temperature has a substantial effect on the final result. Fast preheating is recommended for delicate cuts of meat (sirloin), and for yeast-leavened and sponge dough that require a shorter baking time. Heating an empty oven consumes a lot of energy. Therefore, if possible, we recommend cooking several dishes in succession, or making several dishes simultaneously.

GentleBake: Allows slow and controlled cooking at a low temperature. The meat juices are distributed evenly, and the meat remains juicy and tender. The GentleBake slow cooking method is suitable for delicate boneless meat cuts. Before slow cooking, sear the meat thoroughly from all sides in a frying pan.

Cooking table

NOTE: Dishes requiring a fully pre-heated oven are indicated with a single asterisk * in the table. Dishes for which a 5-minute pre-heating cycle suffices are indicated with two asterisks ** . In this case, do not use the rapid preheat mode.

Dish			°C	min
PASTRY AND BAKERY PRODUCTS				
pastry/cakes in moulds				
sponge cake	3		200-220	60-70
pie with filling	2		180	60-70
marble cake	2		170-180	50-60
cake with leavened dough, Gugelhupf (Bundt cake, pound cake)	2		170-180	45-55
open pie, tart	3		170-180	35-45
brownies	2		170-180	30-35
pastry on baking trays and dishes				
strudel	2		180-190	60-70
strudel, frozen	2		200-210	34-45
sponge roll	3		170-180*	13-18
buchteln	2		180-190	30-40
biscuits, cookies				
cupcakes	3		160 *	25-35
cupcakes, 2 levels	2, 4		155-165 *	30-40
yeast-leavened small pastry	2		180 *	17-22
yeast-leavened small pastry, 2 levels	2, 4		160 *	18-25
puff pastry	3		200-220	30-45
puff pastry, 2 levels	2, 4		170 *	25-30
cookies/biscuits				
piped cookies	3		150 *	30-40
piped cookies, 2 levels	2, 4		150 *	30-40
piped cookies, 3 levels	1, 3, 5		145 *	40-50
cookies/biscuits	3		160-180	40-50
biscuits, 2 levels	2, 4		150-160 *	20-25

Table continued from last page

Dish			°C	min
meringue	3		80-100 *	120-150
meringue, 2 levels	2, 4		80-100 *	120-150
macarons	3		130-140 *	15-20
macarons, 2 levels	2, 4		130-140 *	15-20
bread				
rising and proofing	2		40-45	30-45
bread on a baking tray	2	STEAM +	190-200	40-55
bread on a baking tray, 2 levels	2, 4		190-200 *	40-55
bread in a tin	3		190-200	30-45
bread in a tin, 2 levels	2, 4		200-210	30-45
flatbread (focaccia)	2		270	15-25
fresh bread rolls (Semmel/morning rolls)	3		180-200	20-30
fresh bread rolls (Semmel/morning rolls), 2 levels	2, 4		200-210 *	15-20
toast	5		240	4-6
open sandwiches	5		240	3-5
pizza and other dishes				
homemade pizza	1		300 *	4-10
homemade pizza, 2 rack levels	2, 4		210-220 *	25-30
frozen pizza	2		200-220	10-20
frozen pizza, 2 levels	2, 4		200-220	10-25
savoury pie, quiche	2		190-200	50-60
burek	2		180-190	40-50
MEAT				
beef and veal				
beef roast (loin, rump), 1.5 kg	2		160-170	130-160
braised beef, 1.5 kg	2		200-210	90-120
sirloin, medium done, 1 kg	2		170-190 *	40-60
beef roast, slow cooked	2		120-140 *	250-300

Table continued from last page

Dish			°C	min
beef steaks, well done, thickness 4 cm	4		220-230	25-30
burgers, thickness 3 cm	4		220-230	25-35
veal roast, 1.5 kg	2		160-170	120-150
pork				
pork roast, rump, 1.5 kg	3		200-220	100-200
pork roast, shoulder, 1.5 kg	3		180-190	90-120
pork loin, 400 g	2		80-100 *	80-100
pork roast, slow cooked	2		100-120 *	200-230
pork ribs, slow cooked	2		120-140 *	210-240
pork chops, thickness 3 cm	4		220-230	20-25
poultry				
poultry, 1.2–2.0 kg	2	STEAM +	200-220	60-80
poultry with stuffing, 1.5 kg	2		170-180	70-90
poultry, breast	2		170-180	45-60
chicken thighs	3	STEAM +	210-220	25-40
chicken wings	4		210-220	25-40
poultry, breast, slow cooked	3		100-120 *	60-90
meat dishes				
meat loaf, 1 kg	2		170-180	60-70
grill sausages, bratwurst	4		230 **	8-15
FISH AND SEAFOOD				
whole fish, 350 g	4	STEAM +	230-240	12-20
fish fillet, thickness 1 cm	4		220-230	8-12
fish steak, thickness 2cm	4		220-230	10-15
scallops	4		230 *	5-10
shrimps	4		230 *	3-10
VEGETABLES				

Table continued from last page

Dish			°C	min
baked potatoes, wedges	3	STEAM +	210-220 *	30-40
baked potatoes, halved	3	STEAM +	200-210 *	40-50
stuffed potato (jacket potato)	3		190-200	30-40
French fries, home-made	4		210-220 *	20-30
mixed vegetables, wedges	3	STEAM +	190-200	30-40
stuffed vegetables	3		190-200	30-40
CONVENTIONAL PRODUCTS – FROZEN				
French fries	3		210-220	20-25
french fries, 2 levels	2, 4		190-210	30-40
chicken medallions	4		210-220 *	12-17
fish fingers	2		210-220	15-20
lasagne, 400 g	2		200-210	30-40
diced vegetables	2		190-200	20-30
croissants	3		170-180	18-23
BAKED PUDDINGS, SOUFFLÉS AND DISHES AU GRATIN				
potato moussaka	2		180-190	35-45
lasagne	2		180-190	35-45
sweet baked pudding	2		160-180	40-60
sweet soufflé	2		160-180 *	35-45
dishes au gratin	3		170-190	30-45
stuffed tortillas, enchiladas	2		180-200	20-35
grilling cheese	4		240 **	6-9
OTHER				
preservation	2		180	30
sterilization	3		125	30
cooking in a bain-marie (double boiler)	2		150-170 *	/
reheating	3		60-95	/
plate warming	2		75	15

Cooking with a Temperature Probe (BAKESENSOR)

(depending on the model)

The food probe allows for accurate monitoring of the core temperature of the food during cooking.

WARNING!
The food probe should not be in direct vicinity of the heating elements.

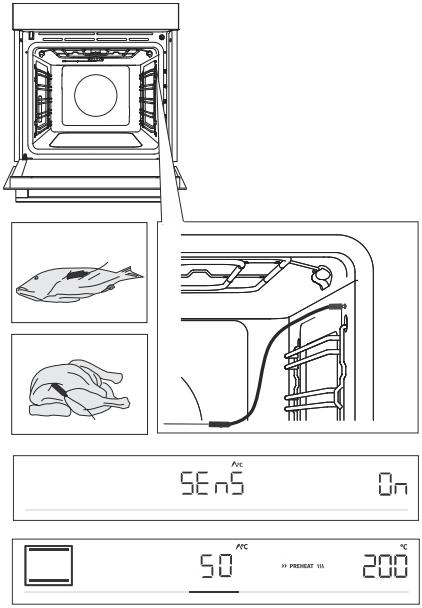

1 Stick the metal end of the probe into the thickest part of the food.

2 Plug the probe plug into the socket located in the upper-right corner at the front of the oven cavity (see figure). **SEnS** will appear on the display unit. To activate the function, rotate the KNOB to position On. Follow the same procedure to deactivate the function. Select OFF on the display unit.

NOTE: To enter the **SEnS** menu, stop the current cooking process and connect the probe to the socket. When you insert the probe into the socket, the previously selected or preset functions on the oven are deleted.

3 Select the desired system and cooking temperature (in the temperature range up to 210 °C) The probe operation symbol and the preset temperature will appear on the display unit, which can be changed by turning the KNOB. Determine the desired final core temperature of your food (between 30 and 99 °C).

NOTE: When using the probe, setting the cooking time is not possible.

4 Confirm the setting by touching the **start | stop** key.

5 When the set core temperature is reached, the oven will stop operating. **End** will appear on the display unit. An acoustic signal will be heard which you may turn off by touching any key. After one minute, the acoustic signal will be switched off automatically.

INFORMATION!
During the cooking process, set and current food core temperature alternate on the display unit. You may change the cooking temperature or the target food core temperature during the cooking process.

Correct use of the probe, by type of food:

- poultry: stick the probe in the thickest part of the breast;
- red meat: stick the probe into a lean part that is not marbled with fat;
- smaller chunks with bone: stick them into an area along the bone;
- fish: stick the probe behind the head, towards the spine.

WARNING!
After use, carefully remove the probe from the food, unplug from the socket in the oven cavity, and clean it.

If SEnS appears on the display unit when the temperature probe is not connected, clean the socket. Try connecting and disconnecting the temperature probe several times in a row.

INFORMATION!
If you do not use the probe, remove it from the oven.

Recommended doneness levels for different types of meat

Type of food	blue (raw)	medium rare	medium	medium well	well done
BEEF					
beef, roast	46-48	48-52	53-58	59-65	68-73
beef, sirloin	45-48	49-53	54-57	58-62	63-66
roast beef/rump steak	45-48	49-53	54-57	58-62	63-66
burgers	49-52	54-57	60-63	66-68	71-74
VEAL					
veal, sirloin	45-48	49-53	54-57	58-62	63-66
veal, rump	45-48	49-53	54-57	58-62	63-66
PORK					
roast, neck	/	/	/	65-70	75-85
pork, loin	/	/	/	60-69	/
meat loaf	/	/	/	/	80-85
LAMB					
lamb	/	60-65	66-71	72-76	77-80
MUTTON					
mutton	/	60-65	66-71	72-76	77-80
GOAT MEAT					
goat	/	60-65	66-71	72-76	77-80
POULTRY					
poultry, whole	/	/	/	/	82-90
poultry, breast	/	/	/	/	62-65
FISH AND SEAFOOD					
trout	/	/	/	62-65	/
tuna	/	/	/	55-60	/
salmon	/	/	/	52-55	/

Cleaning and maintenance

WARNING!
Before cleaning, unplug the appliance from the power mains and wait for the appliance to cool down.

Children should not clean the appliance or perform maintenance tasks without proper supervision.

For easier cleaning, oven cavity and baking tray are coated with special enamel for a smooth and resistant surface.

Regularly clean the appliance and use warm water and hand dishwashing liquid to remove larger impurities and limescale. Use a clean soft cloth or sponge cloth.

Appliance exterior: use hot soapsuds and a soft cloth to remove impurities, then wipe the surfaces dry.

Appliance interior: for stubborn dirt and grime, use conventional oven cleaners. When using such cleaners, thoroughly wipe the appliance with a wet cloth to remove all cleaner residue.

Accessories and guides: clean with hot soapsuds and a damp cloth. For stubborn dirt and grime, we recommend prior soaking and use of a brush.

If the cleaning results are not satisfactory, repeat the cleaning process.

INFORMATION!
Never use aggressive or abrasive cleaners and accessories (abrasive sponges and detergents, stain and rust removers, scrapers for glass ceramic plates).

Oven equipment is dishwasher-safe.

Food residue (fat, sugar, protein) can ignite during the use of the appliance. Therefore, remove larger chunks of dirt from the oven interior and accessories before each use.

Using the Aqua Clean program to clean the oven

This program makes it easier to remove any stains from inside the oven.
The function is the most effective if used regularly, after each use.
Before running the cleaning program, remove all large visible chunks of dirt and food residues from the oven cavity.

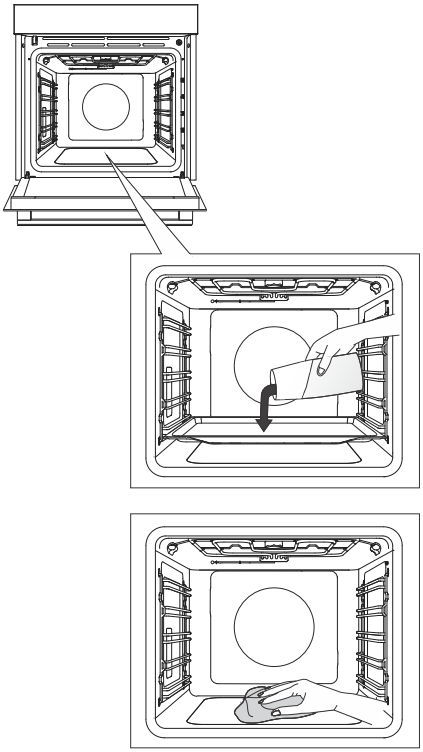

1 Insert the shallow baking tray into the first guide level and pour 0.4 litres of hot water into it.

2 Touch the **extra bake** key to display extra functions on the display unit. Rotate the KNOB to the symbol . Preset values will appear on the display unit.

3 The program will operate for 30 minutes. When the program is complete, **End** will appear on the display unit.

4 When the program is completed, carefully remove the baking tray, using oven mitts (there can still be some water on the baking tray). Wipe down the stains with damp cloth and soapsuds. Thoroughly wipe the appliance with a wet cloth to remove all cleaner residue.

INFORMATION!
If the cleaning process is not successful (in case of particularly stubborn dirt), repeat it.

WARNING!
Use the Aqua Clean system when the oven has fully cooled down.

Cleaning the evaporator tray

WARNING!
After use, the evaporator tray can be hot, and there can still be some water in it. To avoid scalding, wait for the oven to cool down completely.

Remove the tray and manually clean the evaporating tray with a hand washing up liquid or in the dishwasher. If there are limescale deposits in the tray, soak it in limescale remover (use the limescale remover according to the instructions provided by its manufacturer) or in spirit vinegar. After cleaning and before replacing it, thoroughly rinse the tray.

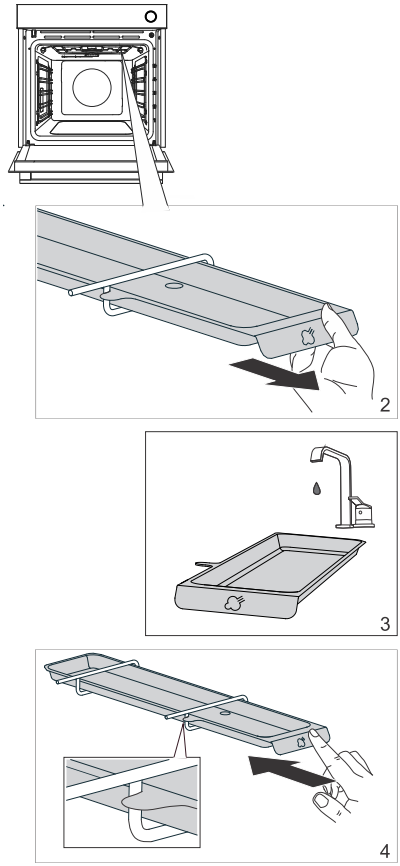

1 The evaporating dish is inserted on the right side, under the top of the oven cavity hanging from the grill heater.

2 Grab the evaporating dish and pull it out of the oven.

3 Clean the evaporator tray with water and detergents.

4 Before cooking with steam injection again, insert the evaporating dish back into the guides and gently push it all the way in.

NOTE: If the tray is not replaced, then water will drip on the food when baking with steam injection.

INFORMATION!
Due to its position close to the heaters, the evaporating tray could discolour. This does not affect its function or usability.

Cleaning the steam system

Cleaning depends on how often you use the steam injection function and on the hardness of the water used.

1. Remove the evaporating dish.
2. Insert the all-purpose deep baking tray into the 5th (top) guide level to allow the water drip into it.
3. In the extra functions menu, select descaling (**dEcL**). Confirm your selection by pressing on the KNOB. Then, rotate it until **Yes** appears on the display unit. Confirm the selection again by long-pressing on the KNOB. The descaling process is started, and it cannot be terminated or cancelled.
4. **Fill** will appear on the display unit. Add limescale remover into the water tank. Confirm the setting by long-pressing on the KNOB.
5. Descaling in progress.
6. When the process is complete, the sign **Fill** will reappear on the display unit. Pour fresh water for rinsing into the water tank. Confirm the setting by long-pressing on the KNOB.
7. After the rinsing process, **End** will appear on the display unit.
8. Remove the baking tray with water from the oven and wipe the oven dry if necessary.

INFORMATION!
If you do not wish to clean the steam system in the moment when proposed by the oven, this can be terminated by selecting OFF. You may cancel the descaling program up to three times. After that, the oven will disable the operation of the steam function.

Removing wire and fixed pull-out (extendible) guides

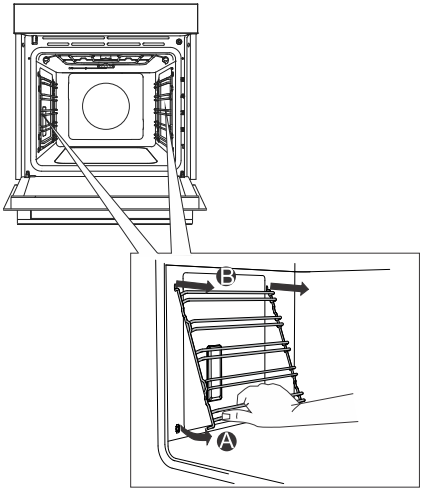

A Hold the guides by the bottom side and pull them towards the center of the oven cavity.

B Remove them from the openings at the top.

INFORMATION!
When removing the guides, take care not to damage the enamel coating.

Removing and replacing the oven door and glass panes

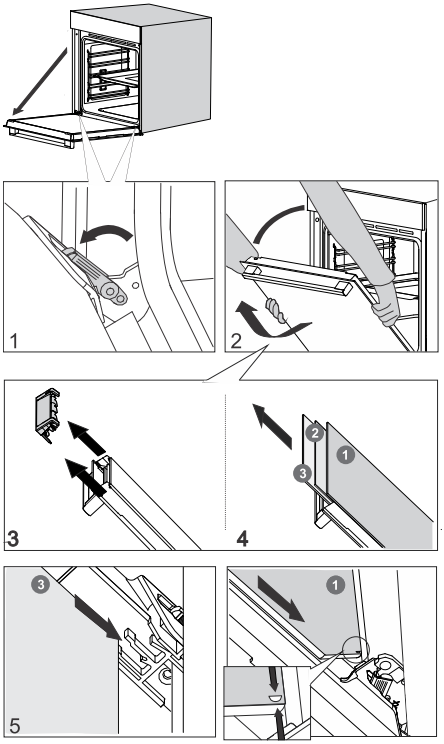

1 First, fully open the door (as far as it will go).

2 Oven door is attached to the hinges with special supports that also include safety levers. Rotate the safety levers towards the door by 90°. Slowly close the door to a 45° angle (relative to the position of the fully closed door); then, lift the door and pull it out.

Oven **door glass pane** can be cleaned from the inside, but it has to be removed from the appliance door first. First, proceed as described under item 2, but do not remove it.

3 Remove the air guide. Hold it on the left- and right-hand side of the door with your hands. Remove it by slightly pulling it towards you.

4 Hold the door glass at the upper edge and remove it. To the same for the second and third glass pane (depending on the model).

5 To replace the glass panes, observe the reverse order.

INFORMATION!
To replace the door, follow the reverse order. If the door does not open or close properly, make sure the notches on the hinges are aligned with the hinge beds.

WARNING!
The oven door hinge can close with considerable force. Therefore, always rotate both safety levers to the support when fitting or removing the appliance door.

Soft door closing and opening
(depending on the model)

Oven door is fitted with a system that dampens the door closing force, starting at the a 75°angle. It allows simple, quiet, and gentle opening and closing of the door. A gentle push (to a 15° angle relative to the closed door position) is enough for the door to close automatically and softly.

WARNING!
If the force applied to close the door is too strong, the effect of the system is reduced and the safety mechanism effect is decreased.

Replacing the bulb

The bulb is a consumable and therefore not covered by warranty. Before replacing the bulb, remove all accessories from the oven.

Halogen lamp: G9, 230 V, 25 W

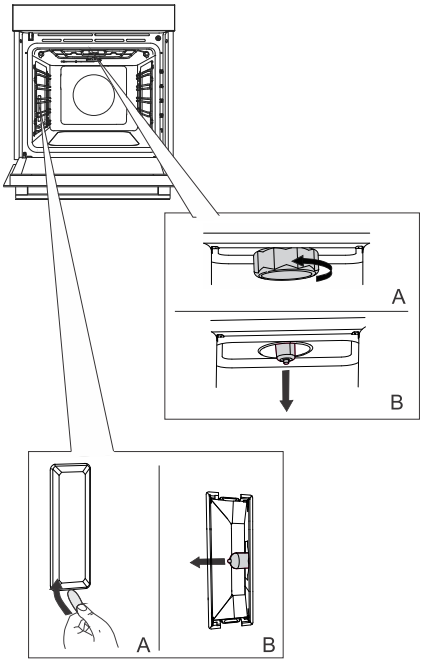

1 Unscrew and remove the cover (in anti-clockwise direction). Remove the halogen bulb.

2 Use a flat plastic tool to remove the cover. Remove the halogen bulb.

INFORMATION!
Take care not to damage the enamel coating.
Use protection to avoid burning yourself.

WARNING!
Only replace the light bulb when the appliance is disconnected from power supply.

Troubleshooting table

Special warnings and fault reporting

During the warranty period, only a service center authorized by the manufacturer may carry out any repairs.

Before making any repairs, make sure the appliance is disconnected from the power mains either by removing the fuse or by disconnecting the power plug from the wall outlet.

Any unauthorized repairs of the appliance may result in electric shock and short circuit hazard; therefore, do not perform them. Leave such work to an expert or a service technician.

In case of minor problems with appliance operation, check this manual to see if you can fix the problem yourself.

If the appliance is not operating properly or at all due to inappropriate operation or handling, a visit from a service technician shall not be free of charge, even during the warranty period.

Save the instructions for future reference and pass them on to any subsequent owners or users of the appliance.

Following is some advice on rectifying some common problems.

Problem/error	Cause
The main fuse in your home trips often.	Call a service technician.
The oven lighting does not work.	The process of changing the light bulb in the oven is described in the chapter Replacing the bulb.
Control unit is not responding, the screen is frozen.	Disconnect the appliance from the power mains for a few minutes (undo the fuse or switch off the main switch); then, reconnect the appliance and switch it on.
Error code ErrX is displayed. **In case of a double-digit error code, ErXX will be displayed.**	There is an error in the electronic module operation. Disconnect the appliance from the power mains for a few minutes. If the error is still indicated, call a service technician.
The display will show SEnS when the temperature probe is not connected.	Clean the socket. Try to connect and disconnect the temperature probe several times in succession.

If the problems persist despite observing the above advice, call an authorized service technician. Repair or any warranty claim resulting from incorrect connection or use of the appliance shall not be covered by the warranty. In this case, the user will cover the cost of repair.

Disposal

Our product packaging is made of environmentally friendly materials that can be recycled, disposed of, or destroyed without any hazard to the environment. To this end, packaging materials are labelled appropriately.

The symbol on the product or its packaging indicates that the product should not be treated as normal household waste. Take the product to an authorized collection centre for waste electric and electronic equipment processing.

Correct **disposal** of the product will help prevent any negative effects on the environment and health of people, which could occur in case of incorrect product removal. For detailed information on removal and processing of the product, please contact the relevant municipal body in charge of waste management, your waste disposal service, or the store where you bought the product.

We reserve the right to any changes and errors in the instructions for use.

Cooking test

EN60350-1: Only use equipment supplied by the manufacturer.
Always insert the baking tray all the way to the end position on the wire guide. Place pastry or cakes baked in moulds as shown in the image.

* Preheat the appliance to desired temperature. Do not use the rapid preheat mode.
** Preheat the appliance for 10 minutes. Do not use the rapid preheat mode.
*** Turn after 2/3 of cooking time.

BAKING						
Dish	Equipment	mould placement		°C	min	
shortbread – single rack	shallow baking tray		3	150	25-40	
shortbread – single rack	shallow baking tray		3	135 **	35-50	
shortbread – two racks/levels	shallow baking tray		2, 4	140 **	25-40	
shortbread – three racks/levels	shallow baking tray		1, 4, 5	135	45-60	
small cakes – single rack	shallow baking tray		3	160-170 **	20-30	
small cakes – single rack	shallow baking tray		3	155 **	20-30	
small cakes – two racks/levels	shallow baking tray		1,5	140 **	30-45	
small cakes – three racks/levels	shallow baking tray		1, 3, 5	140-150	30-50	
sponge cake	round metal mould, diameter 26 cm/wire rack		2	150	45-55	
sponge cake	round metal mould, diameter 26 cm/wire rack		2	160	45-55	
sponge cake – two racks/levels	2 × round metal mould, diameter 26cm/wire rack		2, 4	170 *	45-55	
apple pie	2 × round metal mould, diameter 20cm/wire rack		2	160 **	70-120	
apple pie	2 × round metal mould, diameter 20cm/wire rack		2	160	70-120	
BROILING						
toast	wire rack		5	max	4-7	

Table continued from last page

BAKING						
beef burgers	wire rack + shallow baking sheet as drip tray		5	230	25-40 ***	

gorenje

843575-a14

CE