MX532, MX632, XM3350 MFPs

User's Guide

July 2024 **www.lexmark.com**

Machine type:

7020

Models:

476, 486, 676, 686, 689

Contents

Safety information..... 6

Conventions..... 6
Product statements..... 6

Learn about the printer..... 9

Finding information about the printer..... 9
Finding the printer serial number..... 10
Printer configurations..... 11
Using the control panel..... 12
Understanding the status of the indicator light..... 12
Selecting paper..... 12

Set up, install, and configure..... 19

Selecting a location for the printer..... 19
Attaching cables..... 20
Setting up and using the home screen applications..... 21
Setting up and using the accessibility features..... 27
Setting up the printer to fax..... 30
Configuring the e-mail SMTP settings..... 37
Loading paper and specialty media..... 45
Installing and updating software, drivers, and firmware..... 49
Installing hardware options..... 53
Networking..... 71

Secure the printer..... 75

Locating the security slot..... 75
Erasing printer memory..... 75
Erasing printer storage drive..... 75
Restoring factory default settings..... 76
Statement of Volatility..... 76

Print..... 77

Printing from a computer..... 77
Printing from a mobile device..... 77
Printing from a flash drive..... 79

Supported flash drives and file types.....80
Configuring confidential jobs.....80
Printing confidential and other held jobs.....81
Printing a font sample list.....82
Printing a directory list.....82
Placing separator sheets between copies.....82
Canceling a print job.....82
Adjusting toner darkness.....82

Copy.....83

Using the automatic document feeder and scanner glass.....83
Making copies.....83
Copying photos.....83
Copying on letterhead.....84
Copying on both sides of the paper.....84
Reducing or enlarging copies.....84
Collating copies.....84
Placing separator sheets between copies.....84
Copying multiple pages onto a single sheet.....85
Copying cards.....85
Creating a copy shortcut.....85

E-mail.....86

Using the automatic document feeder and scanner glass.....86
Sending an e-mail.....86
Creating an e-mail shortcut.....86

Fax.....87

Using the automatic document feeder and scanner glass.....87
Sending a fax.....87
Scheduling a fax.....88
Creating a fax destination shortcut.....88
Changing the fax resolution.....88
Adjusting the fax darkness.....88
Printing a fax log.....89
Blocking junk faxes.....89
Holding faxes.....89

Forwarding a fax....89

Scan....91

Using the automatic document feeder and scanner glass....91
Scanning to a computer....91
Scanning to an FTP server....92
Creating an FTP shortcut....92
Scanning to a network folder....93
Creating a network folder shortcut....93
Scanning to a flash drive....94

Use printer menus....95

Menu map....95
Device....96
Print....110
Paper....118
Copy....120
Fax....124
E-mail....139
FTP....146
USB Drive....150
Network/Ports....155
Security....168
Cloud Services....175
Reports....176
Troubleshooting....177
Forms Merge....177
Printing the Menu Settings Page....179

Maintain the printer....180

Checking the status of parts and supplies....180
Configuring supply notifications....180
Setting up e-mail alerts....180
Viewing reports....181
Ordering parts and supplies....181
Replacing parts and supplies....183
Cleaning printer parts....209

Saving energy and paper....217
Moving the printer to another location....217
Shipping the printer....218

Troubleshoot a problem....219

Print quality problems....219
Printer error codes....220
Printing problems....226
The printer is not responding....252
Unable to read flash drive....253
Enabling the USB port....254
Clearing jams....254
Network connection problems....265
Hardware options problems....267
Issues with supplies....268
Paper feed problems....270
E-mailing problems....272
Faxing problems....273
Scanning problems....279
Contacting customer support....286

Recycle and dispose....287

Recycling Lexmark products....287
Recycling Lexmark packaging....287

Notices....288

Index....307

Safety information

Conventions

Note: A *note* identifies information that could help you.

Warning: A *warning* identifies something that could damage the product hardware or software.

WARNING (in full capitals): A *WARNING* indicates a risk of death or serious injury if not avoided.

CAUTION: A *caution* indicates a potentially hazardous situation that could injure you.

Different types of caution statements include:

CAUTION—POTENTIAL INJURY: Indicates a risk of injury.

CAUTION—SHOCK HAZARD: Indicates a risk of electrical shock.

CAUTION—HOT SURFACE: Indicates a risk of burn if touched.

CAUTION—TIPPING HAZARD: Indicates a crush hazard.

CAUTION—PINCH HAZARD: Indicates a risk of being caught between moving parts.

Product statements

CAUTION—POTENTIAL INJURY: To avoid the risk of fire or electrical shock, connect the power cord to an appropriately rated and properly grounded electrical outlet that is near the product and easily accessible.

CAUTION—POTENTIAL INJURY: To avoid the risk of fire or electrical shock, use only the power cord provided with this product or the manufacturer's authorized replacement.

CAUTION—POTENTIAL INJURY: Do not use this product with extension cords, multioutlet power strips, multioutlet extenders, or UPS devices. The power capacity of these types of accessories can be easily overloaded by a laser printer and may result in a risk of fire, property damage, or poor printer performance.

CAUTION—POTENTIAL INJURY: Only a Lexmark Inline Surge Protector that is properly connected between the printer and the power cord provided with the printer may be used with this product. The use of non-Lexmark surge protection devices may result in a risk of fire, property damage, or poor printer performance.

CAUTION—POTENTIAL INJURY: To reduce the risk of fire, use only a 26 AWG or larger telecommunications (RJ-11) cord when connecting this product to the public switched telephone network. For users in Australia, the cord must be approved by the Australian Communications and Media Authority.

CAUTION—SHOCK HAZARD: To avoid the risk of electrical shock, do not place or use this product near water or wet locations.

CAUTION—SHOCK HAZARD: To avoid the risk of electrical shock, do not set up this product or make any electrical or cabling connections, such as the power cord, fax feature, or telephone, during a lightning storm.

CAUTION—POTENTIAL INJURY: Do not cut, twist, bind, crush, or place heavy objects on the power cord. Do not subject the power cord to abrasion or stress. Do not pinch the power cord between objects such as furniture and walls. If any of these things happen, a risk of fire or electrical shock results. Inspect the power cord regularly for signs of such problems. Remove the power cord from the electrical outlet before inspecting it.

CAUTION—SHOCK HAZARD: To avoid the risk of electrical shock, make sure that all external connections (such as Ethernet and telephone system connections) are properly installed in their marked plug-in ports.

CAUTION—SHOCK HAZARD: To avoid the risk of electrical shock, if you are accessing the controller board or installing optional hardware or memory devices sometime after setting up the printer, then turn the printer off, and unplug the power cord from the electrical outlet before continuing. If you have any other devices attached to the printer, then turn them off as well, and unplug any cables going into the printer.

CAUTION—SHOCK HAZARD: To avoid the risk of electrical shock, do not use the fax feature during a lightning storm.

CAUTION—SHOCK HAZARD: To avoid the risk of electrical shock when cleaning the exterior of the printer, unplug the power cord from the electrical outlet and disconnect all cables from the printer before proceeding.

CAUTION—POTENTIAL INJURY: If the printer weight is greater than 20 kg (44 lb), then it may require two or more people to lift it safely.

CAUTION—POTENTIAL INJURY: When moving the printer, follow these guidelines to avoid personal injury or printer damage:

- Make sure that all doors and trays are closed.
- Turn off the printer, and then unplug the power cord from the electrical outlet.
- Disconnect all cords and cables from the printer.
- If the printer has separate floor-standing optional trays or output options attached to it, then disconnect them before moving the printer.
- If the printer has a caster base, then carefully roll it to the new location. Use caution when passing over thresholds and breaks in flooring.
- If the printer does not have a caster base but is configured with optional trays or output options, then remove the output options and lift the printer off the trays. Do not try to lift the printer and any options at the same time.
- Always use the handholds on the printer to lift it.
- Any cart used to move the printer must have a surface able to support the full footprint of the printer.
- Any cart used to move the hardware options must have a surface able to support the dimensions of the options.
- Keep the printer in an upright position.
- Avoid severe jarring movements.
- Make sure that your fingers are not under the printer when you set it down.
- Make sure that there is adequate clearance around the printer.

CAUTION—TIPPING HAZARD: Installing one or more options on your printer or MFP may require a caster base, furniture, or other feature to prevent instability causing possible injury. For more information on supported configurations, see **www.lexmark.com/multifunctionprinters**.

CAUTION—TIPPING HAZARD: To reduce the risk of equipment instability, load each tray separately. Keep all other trays closed until needed.

CAUTION—HOT SURFACE: The inside of the printer might be hot. To reduce the risk of injury from a hot component, allow the surface to cool before touching it.

CAUTION—PINCH HAZARD: To avoid the risk of a pinch injury, use caution in areas marked with this label. Pinch injuries may occur around moving parts, such as gears, doors, trays, and covers.

CAUTION—POTENTIAL INJURY: This product uses a laser. Use of controls or adjustments or performance of procedures other than those specified in the *User's Guide* may result in hazardous radiation exposure.

CAUTION—POTENTIAL INJURY: The lithium battery in this product is not intended to be replaced. There is a danger of explosion if a lithium battery is incorrectly replaced. Do not recharge, disassemble, or incinerate a lithium battery. Discard used lithium batteries according to the manufacturer's instructions and local regulations.

WARNING

- **INGESTION HAZARD**: This product contains a button cell or coin battery.
- **DEATH** or serious injury can occur if ingested.
- A swallowed button cell or coin battery can cause **Internal Chemical Burns** in as little as **2 hours**.
- **KEEP** new and used batteries **OUT OF REACH of CHILDREN**.
- **Seek immediate medical attention** if a battery is suspected to be swallowed or inserted inside any part of the body.

Remove and immediately recycle or dispose of used batteries according to local regulations and keep away from children. Do not dispose of batteries in household trash or incinerate. Even used batteries may cause severe injury or death. Call a local poison control center for treatment information.

Battery type: CR6821

Nominal battery voltage: 3V

Do not force discharge, recharge, disassemble, heat above 60°C (140°F), or incinerate. Doing so may result in injury due to venting, leakage, or explosion resulting in chemical burns.

This product is designed, tested, and approved to meet strict global safety standards with the use of specific manufacturer's components. The safety features of some parts may not always be obvious. The manufacturer is not responsible for the use of other replacement parts.

Refer service or repairs, other than those described in the user documentation, to a service representative.

SAVE THESE INSTRUCTIONS.

Learn about the printer

Finding information about the printer

What are you looking for?	Find it here
Initial setup instructions	See the setup documentation that came with the printer.
• Printer software • Print or fax driver • Printer firmware • Utility	Go to **www.lexmark.com/downloads**, search for your printer model, and then in the Type menu, select the driver, firmware, or utility that you need.
• Selecting and storing paper and specialty media • Loading paper • Configuring printer settings • Viewing and printing documents and photos • Configuring the printer on a network • Caring for and maintaining the printer • Troubleshooting and solving problems	Information Center—Go to **https://infoserve.lexmark.com**. How-to videos—Go to **https://infoserve.lexmark.com/idv/**.
Help information for using the printer software.	Help for Microsoft Windows or Macintosh operating systems—Open a printer software program or application, and then click **Help**. Click ? to view context-sensitive information. **Notes:** • Help is automatically installed with the printer software. • Depending on the operating system, the printer software is either in the printer program folder or on the desktop.
• Documentation • Live chat support • E-mail support • Voice support	Go to **https://support.lexmark.com**. **Note:** Select your country or region, and then select your product to view the appropriate support site. Support contact information for your country or region can be found on the website or on the printed warranty that came with the printer. Have the following information ready when you contact customer support: • Place and date of purchase • Machine type and serial number For more information, see "Finding the printer serial number" on page 10.

What are you looking for?	Find it here
• Safety information • Regulatory information • Warranty information • Environmental information	Warranty information varies by country or region: • **In the U.S.**—See the Statement of Limited Warranty included with the printer, or go to **https://support.lexmark.com**. • **In other countries and regions**—See the printed warranty that came with the printer. *Product Information Guide*—See the documentation that came with the printer or go to **https://support.lexmark.com**.
Information on Lexmark digital passport	Go to **https://csr.lexmark.com/digital-passport.php**.

Finding the printer serial number

1 Open door A.

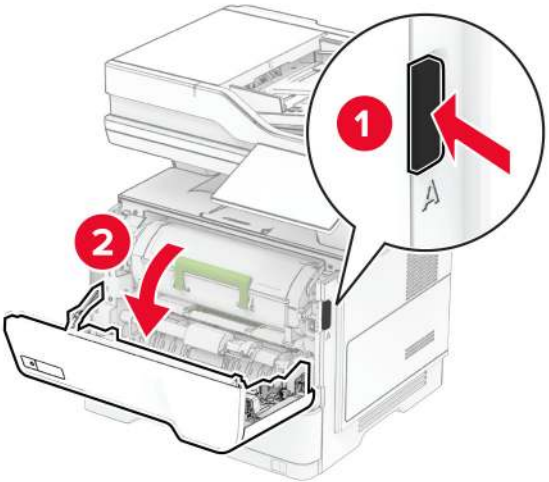

2 Locate the serial number.

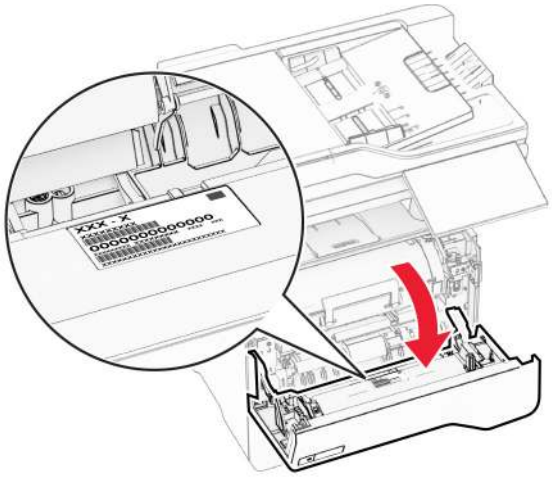

Printer configurations

CAUTION—TIPPING HAZARD: Installing one or more options on your printer or MFP may require a caster base, furniture, or other feature to prevent instability causing possible injury. For more information on supported configurations, see **www.lexmark.com/multifunctionprinters**.

CAUTION—TIPPING HAZARD: To reduce the risk of equipment instability, load each tray separately. Keep all other trays closed until needed.

You can configure your printer by adding up to three optional 250- or 550-sheet trays. For more information, see "Installing optional trays" on page 53.

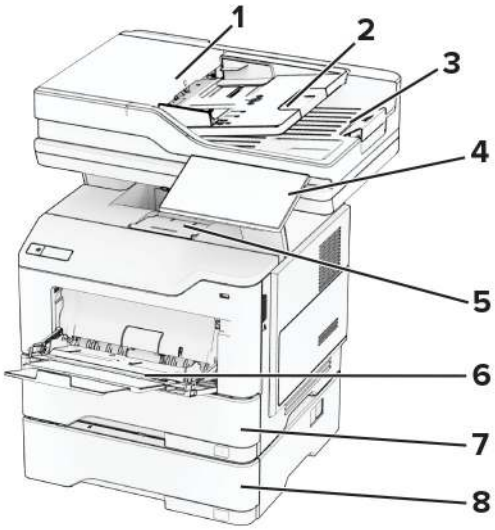

1	Automatic document feeder (ADF)
2	ADF tray
3	ADF bin
4	Control panel
5	Standard bin
6	Multipurpose feeder
7	Standard 550-sheet tray
8	Optional 250- or 550-sheet tray

Using the control panel

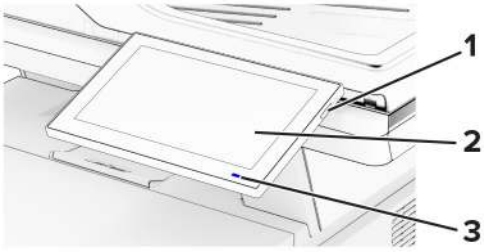

	Control panel part	Function
1	Power button	• Turn on or turn off the printer. **Note:** To turn off the printer, press and hold the power button for five seconds. • Set the printer to Sleep mode. • Wake the printer from Sleep or Hibernate mode.
2	Display	• View the printer messages and supply status. • Set up and operate the printer.
3	Indicator light	Check the status of the printer.

Understanding the status of the indicator light

Indicator light	Printer status
Off	The printer is off.
Solid blue	The printer is ready.
Blinking blue	The printer is printing or processing data.
Blinking red	The printer requires user intervention.
Solid amber	The printer is in Sleep mode.
Blinking amber	The printer is in Deep Sleep or Hibernate mode.

Selecting paper

Paper guidelines

Use the appropriate paper to prevent jams and help ensure trouble-free printing.

- Always use new, undamaged paper.
- Before loading paper, know the recommended printable side of the paper. This information is usually indicated on the paper package.
- Do not use paper that has been cut or trimmed by hand.
- Do not mix paper sizes, types, or weights in the same tray; mixing results in jams.
- Do not use coated papers unless they are specifically designed for electrophotographic printing.

For more information, see the *Paper and Specialty Media Guide*.

Paper characteristics

The following paper characteristics affect print quality and reliability. Consider these factors before printing on them.

Weight

Trays can feed paper of varying weights. Paper lighter than 60 g/m^2 (16 lb) may not be stiff enough to feed properly, and may cause jams. For more information, see the “Supported paper weights” topic.

Curl

Curl is the tendency for paper to curl at its edges. Excessive curl can cause paper feeding problems. Curl can occur after the paper passes through the printer, where it is exposed to high temperatures. Storing paper unwrapped in hot, humid, cold, or dry conditions can contribute to paper curling before printing and can cause feeding problems.

Smoothness

Paper smoothness directly affects print quality. If paper is too rough, toner cannot fuse to it properly. If paper is too smooth, it can cause paper feeding or print quality issues. We recommend the use of paper with 50 Sheffield points.

Moisture content

The amount of moisture in paper affects both print quality and the printer ability to feed the paper correctly. Leave paper in its original wrapper until you use it. Exposure of paper to moisture changes can degrade its performance.

Before printing, store paper in its original wrapper for 24 to 48 hours. The environment in which the paper is stored must be the same as the printer . Extend the time several days if the storage or transportation environment is very different from the printer environment. Thick paper may also require a longer conditioning period.

Grain direction

Grain refers to the alignment of the paper fibers in a sheet of paper. Grain is either *grain long* which runs the length of the paper, or *grain short* which runs the width of the paper. For recommended grain direction, see the “Supported paper weights” topic.

Fiber content

Most high-quality xerographic paper is made from 100 percent chemically treated pulped wood. This content provides the paper with a high degree of stability, resulting in fewer paper feeding problems and better print quality. Paper containing fibers such as cotton can negatively affect paper handling.

Unacceptable paper

The following paper types are not recommended for use with the printer:

- Chemically treated papers that are used to make copies without carbon paper. They are also known as carbonless papers, carbonless copy paper (CCP), or no carbon required (NCR) paper.
- Preprinted papers with chemicals that may contaminate the printer.
- Preprinted papers that can be affected by the temperature in the printer fuser.
- Preprinted papers that require a registration (the precise print location on the page) greater than ±2.3 mm (±0.09 in.). For example, optical character recognition (OCR) forms.

  Sometimes, registration can be adjusted with a software app to print successfully on these forms.
- Coated papers (erasable bond), synthetic papers, or thermal papers.
- Rough-edged, rough or heavily textured surface papers, or curled papers.
- Papers that fail EN12281:2002 (European).
- Paper weighing less than 60 g/m^2 (16 lb).
- Multiple-part forms or documents.

Using recycled paper

Lexmark works to reduce the environmental impact of paper by providing customers choices when it comes to printing. One way we achieve this is by testing products to ensure recycled paper may be used—specifically, papers made with 30%, 50%, and 100% post-consumer recycled content. Our expectation is that recycled papers perform as well as virgin paper in our printers. While no official standard exists for office equipment use of paper, Lexmark uses European Standard EN 12281 as a minimum properties standard. To ensure breadth of testing, test paper includes 100% recycled papers from North America, Europe, and Asia, and tests are conducted at 8–80% relative humidity. Testing includes duplex printing. Office paper using renewable, recycled, or chlorine-free content may all be used.

Storing paper

Use these paper storage guidelines to help avoid jams and uneven print quality:

- Store paper in its original wrapper in the same environment as the printer for 24 to 48 hours before printing.
- Extend the time several days if the storage or transportation environment is very different from the printer environment. Thick paper may also require a longer conditioning period.
- For best results, store paper where the temperature is 21°C (70°F) and the relative humidity is 40 percent.
- Most label manufacturers recommend printing in a temperature range of 18–24°C (65–75°F) with relative humidity between 40 and 60 percent.
- Store paper in cartons, on a pallet or shelf, rather than on the floor.
- Store individual packages on a flat surface.
- Do not store anything on top of individual paper packages.
- Take paper out of the carton or wrapper only when you are ready to load it in the printer. The carton and wrapper help keep the paper clean, dry, and flat.

Selecting preprinted forms and letterhead

- Use grain long paper.
- Use only forms and letterhead printed using an offset lithographic or engraved printing process.
- Avoid paper with rough or heavily textured surfaces.
- Use inks that are not affected by the resin in toner. Inks that are oxidation-set or oil-based generally meet these requirements; latex inks might not.
- Print samples on preprinted forms and letterheads considered for use before buying large quantities. This action determines whether the ink in the preprinted form or letterhead affects print quality.
- When in doubt, contact your paper supplier.
- When printing on letterhead, load the paper in the proper orientation for your printer. For more information, see the *Paper and Specialty Media Guide*.

Supported paper sizes

Paper size	Standard 550-sheet tray	Optional 250- or 550-sheet tray	Multipurpose feeder	Two-sided printing	Scanner glass	Automatic document feeder
A4 210 x 297 mm (8.27 x 11.7 in.)	√	√	√	√	√	√
A5 Portrait (SEF) 148 x 210 mm (5.83 x 8.27 in.)	√	√	√	X	√	√
A5 Landscape (LEF)[1] 210 x 148 mm (8.27 x 5.83 in.)	√	X	√	X	√	√
A6 105 x 148 mm (4.13 x 5.83 in.)	√	X	√	X	√	√
JIS B5 182 x 257 mm (7.17 x 10.1 in.)	√	√	√	X	√	√
Oficio (Mexico) 216 x 340 mm (8.5 x 13.4 in.)	√	√	√	√	√	√
Hagaki 100 x 148 mm (3.93 x 5.83 in.)	X	X	√	X	√	X

[1] The default support is short-edge feed.

[2] When Universal is selected, the page is formatted for 215.90 x 355.60 mm (8.5 x 14 in.) unless specified by the application.

[3] Paper must at least be 210 mm (8.27 in.) wide and 279.4 mm (11 in.) long for two-sided printing.

Paper size	Standard 550-sheet tray	Optional 250- or 550-sheet tray	Multipurpose feeder	Two-sided printing	Scanner glass	Automatic document feeder
Statement 139.7 x 215.9 mm (5.5 x 8.5 in.)	✓	✓	✓	X	✓	✓
Executive 184.2 x 266.7 mm (7.25 x 10.5 in.)	✓	✓	✓	X	✓	✓
Letter 215.9 x 279.4 mm (8.5 x 11 in.)	✓	✓	✓	✓	✓	✓
Legal 215.9 x 355.6 mm (8.5 x 14 in.)	✓	✓	✓	✓	✓	✓
Folio 215.9 x 330.2 mm (8.5 x 13 in.)	✓	✓	✓	✓	✓	✓
Universal[2] 105 x 148 mm to 215.9 x 359.92 mm (4.13 x 5.83 in. to 8.5 x 14.17 in.)	✓	✓	X	✓[3]	X	✓
Universal[2] 76.2 x 127 mm to 215.9 x 359.92 mm (3 x 5.83 in. to 8.5 x 14.17 in.)	X	X	✓	X	X	X
Universal[2] 25.4 x 25.4 mm to 215.9 x 355.6 mm (1 x 1 in. to 8.5 x 14 in.)	X	X	X	X	✓	X
7 3/4 Envelope 98.4 x 190.5 mm (3.875 x 7.5 in.)	X	X	✓	X	✓	X
9 Envelope 98.4 x 225.4 mm (3.875 x 8.9 in.)	X	X	✓	X	✓	X

[1] The default support is short-edge feed.

[2] When Universal is selected, the page is formatted for 215.90 x 355.60 mm (8.5 x 14 in.) unless specified by the application.

[3] Paper must at least be 210 mm (8.27 in.) wide and 279.4 mm (11 in.) long for two-sided printing.

Paper size	Standard 550-sheet tray	Optional 250- or 550-sheet tray	Multipurpose feeder	Two-sided printing	Scanner glass	Automatic document feeder
10 Envelope 104.8 x 241.3 mm (4.12 x 9.5 in.)	X	X	√	X	√	X
DL Envelope 110 x 220 mm (4.33 x 8.66 in.)	X	X	√	X	√	X
C5 Envelope 162 x 229 mm (6.38 x 9.01 in.)	X	X	√	X	√	X
B5 Envelope 176 x 250 mm (6.93 x 9.84 in.)	X	X	√	X	√	X
Other Envelope 76.2 x 127 mm to 215.9 x 359.92 mm (3 x 5.83 in. to 8.5 x 14.17 in.)	X	X	√	X	√	X

[1] The default support is short-edge feed.

[2] When Universal is selected, the page is formatted for 215.90 x 355.60 mm (8.5 x 14 in.) unless specified by the application.

[3] Paper must at least be 210 mm (8.27 in.) wide and 279.4 mm (11 in.) long for two-sided printing.

Supported paper types

Paper type	Standard 550-sheet tray	Optional 250- or 550-sheet tray	Multipurpose feeder	Two-sided printing	Automatic document feeder
Plain paper	√	√	√	√	√
Card stock	X	X	√	X	X
Recycled	√	√	√	√	√
Paper labels*	√	√	√	X	X
Bond	√	√	√	√	√
Letterhead	√	√	√	√	√

* One-sided paper labels are supported for occasional use of less than 20 pages per month. Vinyl, pharmacy, or two-sided labels are not supported.

Paper type	Standard 550-sheet tray	Optional 250- or 550-sheet tray	Multipurpose feeder	Two-sided printing	Automatic document feeder
Preprinted	√	√	√	√	√
Colored Paper	√	√	√	√	√
Light Paper	√	√	√	√	√
Heavy Paper	√	√	√	√	√
Rough/Cotton	√	√	√	√	√
Envelope	X	X	√	X	X
Rough envelope	X	X	√	X	X
* One-sided paper labels are supported for occasional use of less than 20 pages per month. Vinyl, pharmacy, or two-sided labels are not supported.					

Supported paper weights

Supported paper weights

Standard 550-sheet tray	Optional 250- or 550-sheet tray	Multipurpose feeder	Two-sided printing*	Automatic document feeder
60–120 g/m^2 (16–32 lb bond)	60–120 g/m^2 (16–32 lb bond)	60–216 g/m^2 (16–58 lb bond)	60–120 g/m^2 (16–32 lb bond)	52–120 g/m^2 (14–32 lb bond)
* Does not support card stock, labels, or envelopes.				

Set up, install, and configure

Selecting a location for the printer

- Leave enough room to open trays, covers, and doors and to install hardware options.
- Set up the printer near an electrical outlet.

  CAUTION—POTENTIAL INJURY: To avoid the risk of fire or electrical shock, connect the power cord to an appropriately rated and properly grounded electrical outlet that is near the product and easily accessible.

  CAUTION—SHOCK HAZARD: To avoid the risk of electrical shock, do not place or use this product near water or wet locations.
- Make sure that airflow in the room meets the latest revision of the ASHRAE 62 standard or the CEN Technical Committee 156 standard.
- Provide a flat, sturdy, and stable surface.
- Keep the printer:
  - Clean, dry, and free of dust.
  - Away from stray staples and paper clips.
  - Away from the direct airflow of air conditioners, heaters, or ventilators.
  - Free from direct sunlight and humidity extremes.
- Observe the recommended temperatures and avoid fluctuations:

Ambient temperature	10 to 32.2°C (50 to 90°F)
Storage temperature	15.6 to 32.2°C (60 to 90°F)

- Allow the following recommended amount of space around the printer for proper ventilation:

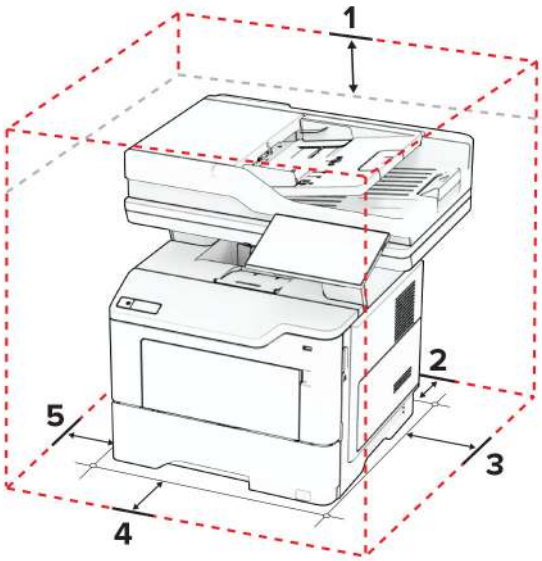

1	Top	305 mm (12 in.)
2	Rear	100 mm (3.94 in.)
3	Right side	76.2 mm (3 in.)

4	Front	305 mm (12 in.) **Note:** The minimum space needed in front of the printer is 76 mm (3 in.).
5	Left side	110 mm (4.33 in.)

Attaching cables

CAUTION—SHOCK HAZARD: To avoid the risk of electrical shock, do not set up this product or make any electrical or cabling connections, such as the power cord, fax feature, or telephone, during a lightning storm.

CAUTION—POTENTIAL INJURY: To avoid the risk of fire or electrical shock, connect the power cord to an appropriately rated and properly grounded electrical outlet that is near the product and easily accessible.

CAUTION—POTENTIAL INJURY: To avoid the risk of fire or electrical shock, use only the power cord provided with this product or the manufacturer's authorized replacement.

CAUTION—POTENTIAL INJURY: To reduce the risk of fire, use only a 26 AWG or larger telecommunications (RJ-11) cord when connecting this product to the public switched telephone network. For users in Australia, the cord must be approved by the Australian Communications and Media Authority.

Warning—Potential Damage: To avoid loss of data or printer malfunction, do not touch the USB cable, any wireless network adapter, or the printer in the areas shown while actively printing.

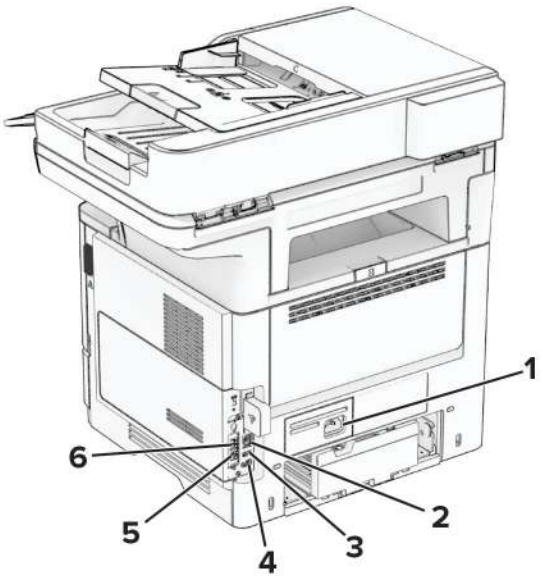

	Printer port	Function
1	Power cord socket	Connect the printer to a properly grounded electrical outlet.
2	Ethernet port	Connect the printer to a network.
3	USB port	Attach a keyboard or any compatible option.
4	USB printer port	Connect the printer to a computer.

	Printer port	Function
5	EXT port	Connect more devices (telephone or answering machine) to the printer and the telephone line. Use this port if you do not have a dedicated fax line for the printer and if this connection method is supported in your country or region.
6	LINE port	Connect the printer to an active telephone line through a standard wall jack (RJ-11), DSL filter, or VoIP adapter, or any other adapter that allows you to access the telephone line to send and receive faxes.

Setting up and using the home screen applications

Using the home screen

Note: Your home screen may vary depending on your home screen customization settings, administrative setup, and active embedded solutions.

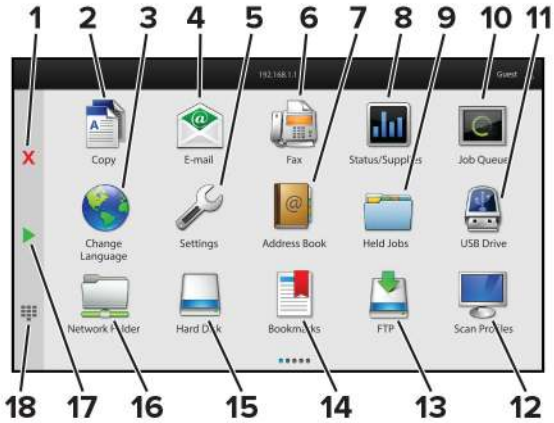

#	Icon	Function
1	Stop or Cancel button	Stop the current job.
2	Copy	Make copies.
3	Change Language	Change the language on the printer display.
4	E-mail	Send e-mails.
5	Settings	Access the printer menus.
6	Fax	Send fax.
7	Address Book	Access, create, and organize contacts.
8	Status/Supplies	• Show a printer warning or error message whenever the printer requires intervention to continue processing. • View more information on the printer warning or message, and on how to clear it. **Note:** You can also access this setting by touching the top section of the home screen.
9	Held Jobs	Show all the current held print jobs

#	Icon	Function
10	Job Queue	Show all the current print jobs. **Note:** You can also access this setting by touching the top section of the home screen.
11	USB Drive	View, select, or print photos and documents from a flash drive.
12	Scan Profiles	Scan and save documents directly to the computer.
13	FTP	Scan and save documents directly to an FTP server.
14	Bookmarks	Organize all bookmarks.
15	Hard Disk	View, select, and manage documents from a hard drive or an intelligent storage drive.
16	Network Folder	Scan to a network folder or network location.
17	Start button	Start a job, depending on which mode is selected.
18	On-screen keypad	Enter numbers or symbols in an input field.

Customizing the home screen

1. Open a web browser, and then type the printer IP address in the address field.

   Notes:

   - View the printer IP address on the printer home screen. The IP address appears as four sets of numbers separated by periods, such as 123.123.123.123.
   - If you are using a proxy server, then temporarily disable it to load the web page correctly.

2. Click **Settings** > **Device** > **Home Screen Customization**.
3. Do one or more of the following:
   - To add an icon to the home screen, click ➕, select the app name, and then click **Add**.
   - To remove a home screen icon, select the app name, and then click **Remove**.
   - To customize an app name, select the app name, click **Edit**, and then assign a name.
   - To restore the name of an app, select the app name, click **Edit**, and then select **Restore app label**.
   - To add a space between apps, click ➕, select **BLANK SPACE**, and then click **Add**.
   - To arrange the apps, drag the app names in the order that you want.
   - To restore the default home screen, click **Restore home screen**.
4. Apply the changes.

Supported applications

Application	Printer models
Scan Center	MX532, MX632, XM3350
Shortcut Center	MX532, MX632, XM3350
Card Copy	MX532, MX632, XM3350
Display Customization	MX532, MX632, XM3350

Application	Printer models
Customer Support	XM3350
Device Quotas	XM3350

Setting up Scan Center

1 From the home screen, touch **Scan Center**.

2 Select and create a destination, and then configure the settings.

Notes:

- When creating a network destination, make sure to validate and adjust the settings until no errors occur.
- Only destinations created from the Embedded Web Server are saved. For more information, see the documentation that came with the solution.

3 Apply the changes.

Creating a shortcut

1 From the home screen, touch **Shortcut Center**.

Note: The icon and name may have been changed. For more information, contact your administrator.

2 Select a printer function, and then touch **Create Shortcut**.

Note: The Secure E-mail function is not supported.

3 Configure the settings, and then touch **Save**.

4 Type a unique shortcut name.

Note: To avoid clipped names on the home screen, type only up to 25 characters.

5 Touch **OK**.

The application automatically generates a unique shortcut number.

Note: To launch the shortcut, touch , touch **#**, and then enter the shortcut number.

Setting up Card Copy

1 Open a web browser, and then type the printer IP address in the address field.

Notes:

- View the printer IP address on the printer home screen. The IP address appears as four sets of numbers separated by periods, such as 123.123.123.123.
- If you are using a proxy server, then temporarily disable it to load the web page correctly.

2 Click **Apps** > **Card Copy** > **Configure**.

Notes:

- Make sure that Display Icon is enabled.

- Make sure that E-mail Settings and Network Share Settings are configured.
- When scanning a card, make sure that the scan resolution does not exceed 200 dpi for color and 400 dpi for black and white.
- When scanning multiple cards, make sure that the scan resolution does not exceed 150 dpi for color and 300 dpi for black and white.

3 Apply the changes.

Note: You need a printer hard disk or an intelligent storage drive to scan multiple cards.

Using Display Customization

Before using the application, make sure to enable and configure the screen saver, slideshow, and wallpaper settings from the Embedded Web Server.

Managing screen saver and slide show images

1 From the Embedded Web Server, click **Apps** > **Display Customization** > **Configure**.

2 In the Screen Saver and Slideshow Images section, add, edit, or delete an image.

Notes:

- You can add up to 10 images.
- When enabled, the status icons appear on the screen saver only when there are errors, warnings, or cloud-based notifications.

3 Apply the changes.

Changing the wallpaper image

1 From the home screen, touch **Change Wallpaper**.

2 Select an image to use.

3 Apply the changes.

Running a slide show from a flash drive

1 Insert a flash drive into the front USB port.

2 From the home screen, touch **Slideshow**.

Note: You can remove the flash drive after the slide show starts, but the images are not stored in the printer. If the slide show stops, then insert the flash drive again to view the images.

Using Customer Support

Notes:

- This application is supported only in some printer models. For more information, see "Supported applications" on page 22.

- For information on how to configure the application settings, see the *Customer Support Administrator's Guide*.

1 From the home screen, touch **Customer Support**.

2 Print or e-mail the information.

Setting up Device Quotas

Notes:

- This application is supported only in some printer models. For more information, see "Supported applications" on page 22.
- For information on how to configure the application settings, see the *Device Quotas Administrator's Guide*.

1 Open a web browser, and then type the printer IP address in the address field.

   Notes:

   - View the printer IP address on the printer home screen. The IP address appears as four sets of numbers separated by periods, such as 123.123.123.123.
   - If you are using a proxy server, then temporarily disable it to load the web page correctly.

2 Click **Apps** > **Device Quotas** > **Configure**.

3 In the User Accounts section, add or edit a user, and then set the user quota.

4 Apply the changes.

Managing bookmarks

Creating bookmarks

Use bookmarks to print frequently accessed documents that are stored in servers or on the web.

1 Open a web browser, and then type the printer IP address in the address field.

   Notes:

   - View the printer IP address on the printer home screen. The IP address appears as four sets of numbers separated by periods, such as 123.123.123.123.
   - If you are using a proxy server, then temporarily disable it to load the web page correctly.

2 Click **Bookmarks** > **Add Bookmark**, and then type a bookmark name.

3 Select an Address protocol type, and then do one of the following:

   - For HTTP and HTTPS, type the URL that you want to bookmark.
   - For HTTPS, make sure to use the host name instead of the IP address. For example, type **`myWebsite.com/sample.pdf`** instead of typing **`123.123.123.123/sample.pdf`**. Make sure that the host name also matches the Common Name (CN) value in the server certificate. For more information on obtaining the CN value in the server certificate, see the help information for your web browser.
   - For FTP, type the FTP address. For example, **`myServer/myDirectory`**. Enter the FTP port. Port 21 is the default port for sending commands.

- For SMB, type the network folder address. For example, **`myServer/myShare/myFile.pdf`**. Type the network domain name.
- If necessary, select the Authentication type for FTP and SMB.

To limit access to the bookmark, enter a PIN.

Note: The application supports the following file types: PDF, JPEG, TIFF, and HTML-based web pages. Other file types such as DOCX and XLXS are supported in some printer models.

4 Click **Save**.

Creating folders

1 Open a web browser, and then type the printer IP address in the address field.

Notes:

- View the printer IP address on the printer home screen. The IP address appears as four sets of numbers separated by periods, such as 123.123.123.123.
- If you are using a proxy server, then temporarily disable it to load the web page correctly.

2 Click **Bookmarks** > **Add Folder**, and then type a folder name.

Note: To limit access to the folder, enter a PIN.

3 Click **Save**.

Note: You can create folders or bookmarks inside a folder. To create a bookmark, see "Creating bookmarks" on page 25.

Managing contacts

1 From the home screen, touch **Address Book.**

2 Do one or more of the following:

- To add a contact, touch ⋮ on top of the screen, and then touch **Create Contact**. If necessary, specify a login method to allow application access.
- To delete a contact, touch ⋮ on top of the screen, touch **Delete Contacts**, and then select the contact.
- To edit contact information, touch the contact name.
- To create a group, touch ⋮ on top of the screen, and then touch **Create Group**. If necessary, specify a login method to allow application access.
- To delete a group, touch ⋮ on top of the screen, touch **Delete Groups**, and then select the group.
- To edit a contact group, touch **GROUPS** > select a group name > ⋮ > select the action you want to make.

3 Apply the changes.

Setting up and using the accessibility features

Activating Voice Guidance

From the home screen

1. In one motion and using one finger, slowly swipe left then up on the display until you hear a voice message.

   Note: For printer models without built-in speakers, use headphones to hear the message.

2. Using two fingers, touch **OK**.

   Note: If the gesture does not work, then apply more pressure.

From the keyboard

1. Press and hold the **5** key until you hear a voice message.

   Note: For printer models without built-in speakers, use headphones to hear the message.

2. Press **Tab** to navigate the focus cursor to the OK button, and then press **Enter**.

Notes:

- When Voice Guidance is activated, always use two fingers to select any item on the display.
- Voice Guidance has limited language support.

Deactivating Voice Guidance

1. In one motion and using one finger, slowly swipe left then up on the display until you hear a voice message.

   Note: For printer models without built-in speakers, use headphones to hear the message.

2. Using two fingers, do either of the following:
   - Touch **Voice Guidance**, then touch **OK**.
   - Touch **Cancel**.

   Note: If the gesture does not work, then apply more pressure.

You can also deactivate Voice Guidance by doing either of the following:

- Using two fingers, double tap the home screen.
- Press the power button to put the printer in Sleep or Hibernate mode.

Navigating the screen using gestures

Notes:

- Most of the gestures are applicable only when Voice Guidance is activated.
- Enable Magnification to use the zoom and pan gestures.
- Use a physical keyboard to type characters and adjust certain settings.

Gesture	Function
Swipe left then up using one finger	Launch Accessibility mode. Use the same gesture to exit Accessibility mode. **Note:** This gesture is also applicable when the printer is in normal mode.
Double-tap using one finger	Select an option or item on the screen.
Double-tap the home icon using two fingers	Deactivate the Accessibility mode.
Triple-tap using one finger	Zoom in or zoom out text and images.
Swipe right or swipe down using one finger	Move to the next item on the screen.
Swipe left or swipe up using one finger	Move to the previous item on the screen.
Swipe up then down using one finger	Move to the first item on the screen.
Pan	Access parts of the zoomed image that are beyond the limit of the screen. **Note:** Use two fingers to drag a zoomed image.
Swipe up then right using one finger	Increase the volume. **Note:** This gesture is also applicable when the printer is in normal mode.
Swipe down then right using one finger	Decrease the volume. **Note:** This gesture is also applicable when the printer is in normal mode.
Swipe up then left using one finger	Exit an application and return to the home screen.
Swipe down then left using one finger	Go back to the previous setting.

Using the on-screen keyboard

When the on-screen keyboard appears, do one or more of the following:

- Touch a key to announce and type the character in the field.
- Drag a finger across different characters to announce and type the character in the field.
- Touch a text box using two fingers to announce the characters in the field.
- Touch **Backspace** to delete characters.

Enabling Magnification mode

1. In one motion and using one finger, slowly swipe left then up on the display until you hear a voice message.

   Note: For printer models without built-in speakers, use headphones to hear the message.

2. Using two fingers, do the following:
   a. Touch **Magnification mode**.
   b. Touch **OK**.

   Note: If the gesture does not work, then apply more pressure.

For more information on navigating a magnified screen, see “Navigating the screen using gestures” on page 27.

Adjusting the Voice Guidance speech rate

1 From the home screen, touch **Settings** > **Device** > **Accessibility** > **Speech Rate**.

2 Select the speech rate.

Adjusting the default headphone volume

1 From the home screen, touch **Settings** > **Device** > **Accessibility**.

2 Adjust the headphone volume.

Note: The volume resets to the default value after the user exits Accessibility mode or when the printer wakes from Sleep or Hibernate mode.

Adjusting the default internal speaker volume

1 From the home screen, touch .

2 Adjust the volume.

Notes:

- If Quiet Mode is enabled, then audible alerts are turned off. This setting also slows the printer performance.
- The volume resets to the default value after the user exits Accessibility mode or when the printer wakes from Sleep or Hibernate mode.

Enabling spoken passwords or personal identification numbers

1 From the home screen, touch **Settings** > **Device** > **Accessibility** > **Speak Passwords/PINs**.

2 Enable the setting.

Setting up the printer to fax

Supported fax

Printer model	Analog fax	etherFAX[1]	Fax server	Fax over IP (FoIP)[2]
MX532adwe	√	√	√	√
MX632adwe	√	√	√	√
XM3350	√	√	√	√

[1] Needs a subscription. For more information, go to **https://www.etherfax.net/lexmark** or contact the place where you purchased the printer.

[2] Needs an installed license bundle. For more information, contact the place where you purchased the printer.

Setting up the fax function using analog fax

Notes:

- Some connection methods are applicable only in some countries or regions.
- If the fax function is enabled and not fully set up, then the indicator light may blink red.
- If you do not have a TCP/IP environment, then use the control panel to set up fax.

Warning—Potential Damage: To avoid loss of data or printer malfunction, do not touch cables or the printer in the area shown while actively sending or receiving a fax.

Using the control panel

1. From the home screen, touch **Settings** > **Fax** > **Fax Setup** > **General Fax Settings**.
2. Configure the settings.

Using the Embedded Web Server

1 Open a web browser, and then type the printer IP address in the address field.

Notes:

- View the printer IP address on the home screen. The IP address appears as four sets of numbers separated by periods, such as 123.123.123.123.
- If you are using a proxy server, then temporarily disable it to load the web page correctly.

2 Click **Settings** > **Fax** > **Fax Setup** > **General Fax Settings**.

3 Configure the settings.

4 Apply the changes.

Setting up the fax function using etherFAX

Notes:

- The printer firmware must be updated to the latest version. For more information, see the "Updating firmware" section.
- An appropriate license bundle must be installed in your printer. For more information, contact etherFAX.
- Make sure that you have registered your printer to the etherFAX portal. For more information, go to **https://www.etherfax.net/lexmark**.
- The printer serial number is required on registration. To locate the serial number, see "Finding the printer serial number" on page 10.

1 Open a web browser, and then type the printer IP address in the address field.

Notes:

- View the printer IP address on the home screen. The IP address appears as four sets of numbers separated by periods, such as 123.123.123.123.
- If you are using a proxy server, then temporarily disable it to load the web page correctly.

2 Click **Settings** > **Fax** > **Fax Setup** > **General Fax Settings**.

Note: Fax Setup appears only if Fax Mode is set to Fax.

3 In the Fax Name field, type a unique name.

4 In the Fax Number field, enter the fax number that etherFAX provided.

5 From the Fax Transport menu, select **etherFAX**.

Notes:

- This menu shows up only when more than one fax transport is available.
- If the printer only has etherFAX installed, then it is automatically configured.

6 Apply the changes.

Setting up the fax function using fax server

Notes:

- This feature lets you send fax messages to a fax service provider that supports e-mail receiving.
- This feature supports outgoing fax messages only. To support fax receive, make sure that you have a device-based fax, such as analog fax, etherFAX, or Fax over IP (FoIP), configured in your printer.

1. Open a web browser, and then type the printer IP address in the address field.

   Notes:

   - View the printer IP address on the home screen. The IP address appears as four sets of numbers separated by periods, such as 123.123.123.123.
   - If you are using a proxy server, then temporarily disable it to load the web page correctly.

2. Click **Settings** > **Fax**.
3. From the Fax Mode menu, select **Fax Server**, and then click **Save**.
4. Click **Fax Server Setup**.
5. In the To Format field, type **`[#]@myfax.com`**, where **`[#]`** is the fax number and **`myfax.com`** is the fax provider domain.

   Notes:

   - If necessary, configure the Reply Address, Subject, or Message fields.
   - To let the printer receive fax messages, enable the device-based fax receive setting. Make sure that you have a device-based fax configured.

6. Click **Save**.
7. Click **Fax Server E-mail Settings**, and then do either of the following:
   - Enable **Use E-mail SMTP Server**.

     Note: If the E-mail SMTP settings are not configured, then see "Configuring the e-mail SMTP settings" on page 37.
   - Configure the SMTP settings. For more information, contact your e-mail service provider.
8. Apply the changes.

Setting up fax using a standard telephone line

Note: These instructions apply only to printers that support analog fax. For more information, see "Supported fax" on page 30.

CAUTION—SHOCK HAZARD: To avoid the risk of electrical shock, do not set up this product or make any electrical or cabling connections, such as the power cord, fax feature, or telephone, during a lightning storm.

CAUTION—SHOCK HAZARD: To avoid the risk of electrical shock, do not use the fax feature during a lightning storm.

CAUTION—POTENTIAL INJURY: To reduce the risk of fire, use only a 26 AWG or larger telecommunications (RJ-11) cord when connecting this product to the public switched telephone network. For users in Australia, the cord must be approved by the Australian Communications and Media Authority.

Setup 1: Printer is connected to a dedicated fax line

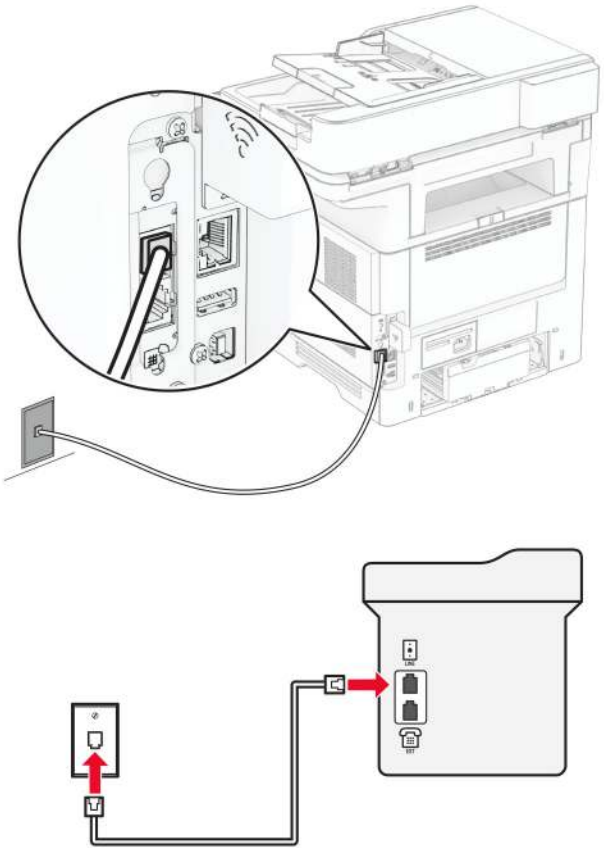

1. Connect one end of the telephone cable to the line port of the printer.
2. Connect the other end of the cable to an active analog wall jack.

Notes:

- You can set the printer to receive faxes automatically (set Auto Answer to **On**) or manually (set Auto Answer to **Off**).
- If you want to receive faxes automatically, then set the printer to pick up on a specified number of rings.

Setup 2: Printer is sharing the line with an answering machine

Note: If you subscribe to a distinctive ring service, then make sure that you set the correct ring pattern for the printer. Otherwise, the printer does not receive faxes even if you have set it to receive faxes automatically.

Connected to different wall jacks

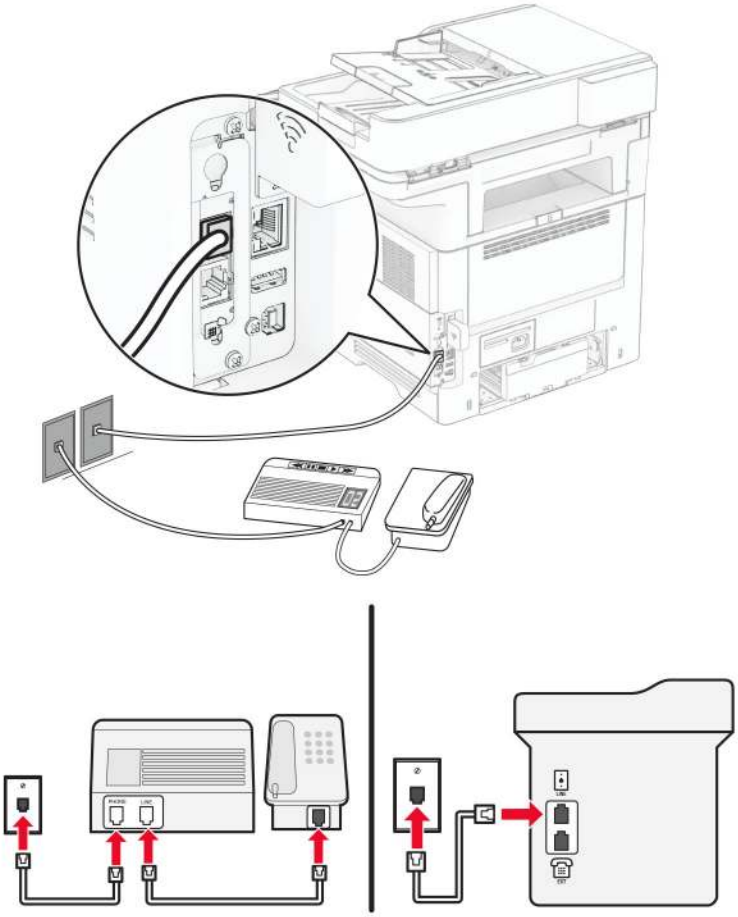

1 Connect one end of the telephone cable to the line port of the printer.

2 Connect the other end of the cable to an active analog wall jack.

Notes:

- If you have only one telephone number on your line, then set the printer to receive faxes automatically.
- Set the printer to pick up calls two rings after the answering machine. For example, if the answering machine picks up calls after four rings, then set the printer Rings to Answer setting to **6**.

Setting up fax in countries or regions with different telephone wall jacks and plugs

Note: These instructions apply only to printers that support analog fax. For more information, see "Supported fax" on page 30.

CAUTION—SHOCK HAZARD: To avoid the risk of electrical shock, do not set up this product or make any electrical or cabling connections, such as the power cord, fax feature, or telephone, during a lightning storm.

CAUTION—SHOCK HAZARD: To avoid the risk of electrical shock, do not use the fax feature during a lightning storm.

CAUTION—POTENTIAL INJURY: To reduce the risk of fire, use only a 26 AWG or larger telecommunications (RJ-11) cord when connecting this product to the public switched telephone network. For users in Australia, the cord must be approved by the Australian Communications and Media Authority.

The standard wall jack adopted by most countries or regions is RJ-11. If the wall jack or equipment in your facility is not compatible with this type of connection, then use a telephone adapter. An adapter for your country or region may not come with your printer, and you may need to purchase it separately.

There may be an adapter plug installed in the telephone port of the printer. Do not remove the adapter plug from the telephone port of the printer if you are connecting to a serial or cascaded telephone system.

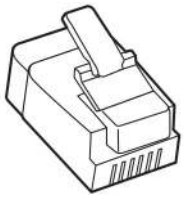

Part name	Part number
Lexmark adapter plug	40X8519

Connecting the printer to a non-RJ-11 wall jack

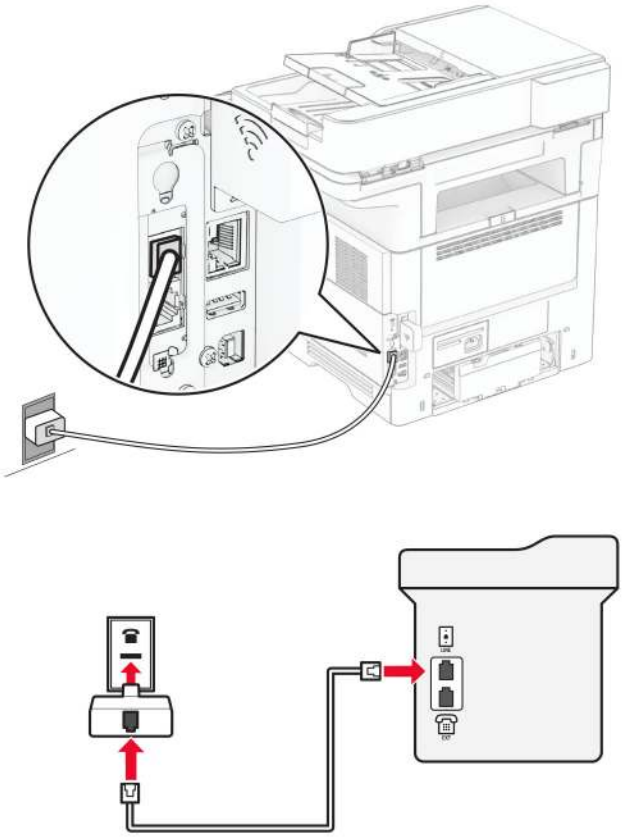

1. Connect one end of the telephone cable to the line port of the printer.
2. Connect the other end of the cable to the RJ-11 adapter, and then connect the adapter to the wall jack.
3. If you want to connect another device with a non-RJ-11 connector to the same wall jack, then connect it directly to the telephone adapter.

Connecting to a distinctive ring service

A distinctive ring service lets you have multiple telephone numbers on one telephone line. Each telephone number is assigned a different ring pattern.

Note: These instructions apply only to printers that support analog fax. For more information, see "Supported fax" on page 30.

1. From the home screen, touch **Settings** > **Fax** > **Fax Setup** > **Fax Receive Settings** > **Admin Controls** > **Answer On**.
2. Select a ring pattern.

Setting the fax date and time

Note: Make sure that fax is configured. For more information, see the **Setting up the printer to fax** section.

1 From the home screen, touch **Settings** > **Device** > **Preferences** > **Date and Time** > **Configure**.

2 Configure the settings.

Configuring daylight saving time

Note: Make sure that fax is configured. For more information, see the **Setting up the printer to fax** section.

1 From the home screen, touch **Settings** > **Device** > **Preferences** > **Date and Time** > **Configure**.

2 In the Time Zone menu, touch **(UTC+user) Custom**.

3 Touch **UTC (GMT) Offset**, and then configure the settings.

Configuring the fax speaker settings

Note: Make sure that fax is configured. For more information, see the **Setting up the printer to fax** section.

1 From the home screen, touch **Settings** > **Fax** > **Fax Setup** > **Speaker Settings**.

2 Do the following:
- Set Speaker Mode to **Always On**.
- Set Speaker Volume to **High**.
- Enable Ringer Volume.

Configuring the e-mail SMTP settings

Configure the Simple Mail Transfer Protocol (SMTP) settings to send a scanned document through e-mail. The settings vary with each e-mail service provider.

Before you begin, make sure that the printer is connected to a network and that the network is connected to the Internet.

Using the Embedded Web Server

1 Open a web browser, and then type the printer IP address in the address field.

Notes:

- View the printer IP address on the printer home screen. The IP address appears as four sets of numbers separated by periods, such as 123.123.123.123.
- If you are using a proxy server, then temporarily disable it to load the web page correctly.

2 Click **Settings** > **E-mail**.

3 From the E-mail Setup section, configure the settings.

Notes:

- For more information, see the list of **e-mail service providers**.

- For e-mail service providers that are not on the list, contact your provider and ask for the settings.

4 Click **Save**.

Using the Settings menu in the printer

1 From the home screen, touch **Settings** > **E-mail** > **E-mail Setup**.

2 Configure the settings.

Notes:

- For more information, see the list of **e-mail service providers**.
- For e-mail service providers that are not on the list, contact your provider and ask for the settings.

E-mail service providers

- **AOL Mail**
- **Comcast Mail**
- **Gmail**
- **iCloud Mail**
- **Mail.com**
- **NetEase Mail (mail.126.com)**
- **NetEase Mail (mail.163.com)**
- **NetEase Mail (mail.yeah.net)**
- **Outlook Live or Microsoft 365**
- **QQ Mail**
- **Sina Mail**
- **Sohu Mail**
- **Yahoo! Mail**
- **Zoho Mail**

Notes:

- If you encounter errors using the settings provided, then contact your e-mail service provider.
- For e-mail service providers that are not on the list, contact your provider.

AOL Mail

Setting	Value
Primary SMTP Gateway	smtp.aol.com
Primary SMTP Gateway Port	587
Use SSL/TLS	Required
Require Trusted Certificate	Disabled
Reply Address	Your e-mail address
SMTP Server Authentication	Login / Plain
Device-Initiated E-mail	Use Device SMTP Credentials

Setting	Value
Device UserID	Your e-mail address
Device Password	App password **Note:** To create an app password, go to the **AOL Account Security** page, log in to your account, and then click **Generate app password**.

Comcast Mail

Setting	Value
Primary SMTP Gateway	smtp.comcast.net
Primary SMTP Gateway Port	587
Use SSL/TLS	Required
Require Trusted Certificate	Disabled
Reply Address	Your e-mail address
SMTP Server Authentication	Login / Plain
Device-Initiated E-mail	Use Device SMTP Credentials
Device UserID	Your e-mail address
Device Password	Account password

Note: Make sure that the Third Party Access Security setting is enabled on your account. For more information, go to the **Comcast Xfinity Connect help page**.

Gmail™

Note: Make sure that two-step verification is enabled on your Google account. To enable two-step verification, go to the **Google Account Security** page, log in to your account, and then from the “Signing in to Google” section, click **2-Step Verification**.

Setting	Value
Primary SMTP Gateway	smtp.gmail.com
Primary SMTP Gateway Port	587
Use SSL/TLS	Required
Require Trusted Certificate	Disabled
Reply Address	Your e-mail address
SMTP Server Authentication	Login / Plain
Device-Initiated E-mail	Use Device SMTP Credentials
Device UserID	Your e-mail address

Setting	Value
Device Password	App password **Notes:** • To create an app password, go to the **Google Account Security** page, log in to your account, and then from the “Signing in to Google” section, click **App passwords**. • “App passwords” shows only if two-step verification is enabled.

iCloud Mail

Note: Make sure that two-step verification is enabled on your account.

Setting	Value
Primary SMTP Gateway	smtp.mail.me.com
Primary SMTP Gateway Port	587
Use SSL/TLS	Required
Require Trusted Certificate	Disabled
Reply Address	Your e-mail address
SMTP Server Authentication	Login / Plain
Device-Initiated E-mail	Use Device SMTP Credentials
Device UserID	Your e-mail address
Device Password	App password **Note:** To create an app password, go to the **iCloud Account Management** page, log in to your account, and then from the Security section, click **Generate Password**.

Mail.com

Setting	Value
Primary SMTP Gateway	smtp.mail.com
Primary SMTP Gateway Port	587
Use SSL/TLS	Required
Require Trusted Certificate	Disabled
Reply Address	Your e-mail address
SMTP Server Authentication	Login / Plain
Device-Initiated E-mail	Use Device SMTP Credentials
Device UserID	Your e-mail address
Device Password	Account password

NetEase Mail (mail.126.com)

Note: Make sure that the SMTP service is enabled on your account. To enable the service, from the NetEase Mail home page, click **Settings** > **POP3/SMTP/IMAP**, and then enable either **IMAP/SMTP service** or **POP3/SMTP service**.

Setting	Value
Primary SMTP Gateway	smtp.126.com
Primary SMTP Gateway Port	465
Use SSL/TLS	Required
Require Trusted Certificate	Disabled
Reply Address	Your e-mail address
SMTP Server Authentication	Login / Plain
Device-Initiated E-mail	Use Device SMTP Credentials
Device UserID	Your e-mail address
Device Password	Authorization password **Note:** The authorization password is provided when IMAP/SMTP service or POP3/SMTP service is enabled.

NetEase Mail (mail.163.com)

Note: Make sure that the SMTP service is enabled on your account. To enable the service, from the NetEase Mail home page, click **Settings** > **POP3/SMTP/IMAP**, and then enable either **IMAP/SMTP service** or **POP3/SMTP service**.

Setting	Value
Primary SMTP Gateway	smtp.163.com
Primary SMTP Gateway Port	465
Use SSL/TLS	Required
Require Trusted Certificate	Disabled
Reply Address	Your e-mail address
SMTP Server Authentication	Login / Plain
Device-Initiated E-mail	Use Device SMTP Credentials
Device UserID	Your e-mail address
Device Password	Authorization password **Note:** The authorization password is provided when IMAP/SMTP service or POP3/SMTP service is enabled.

NetEase Mail (mail.yeah.net)

Note: Make sure that the SMTP service is enabled on your account. To enable the service, from the NetEase Mail home page, click **Settings** > **POP3/SMTP/IMAP**, and then enable either **IMAP/SMTP service** or **POP3/SMTP service**.

Setting	Value
Primary SMTP Gateway	smtp.yeah.net
Primary SMTP Gateway Port	465
Use SSL/TLS	Required
Require Trusted Certificate	Disabled
Reply Address	Your e-mail address
SMTP Server Authentication	Login / Plain
Device-Initiated E-mail	Use Device SMTP Credentials
Device UserID	Your e-mail address
Device Password	Authorization password **Note:** The authorization password is provided when IMAP/SMTP service or POP3/SMTP service is enabled.

Outlook Live or Microsoft 365

These settings apply to outlook.com and hotmail.com e-mail domains, and Microsoft 365 accounts.

Setting	Value
Primary SMTP Gateway	smtp.office365.com
Primary SMTP Gateway Port	587
Use SSL/TLS	Required
Require Trusted Certificate	Disabled
Reply Address	Your e-mail address
SMTP Server Authentication	Login / Plain
Device-Initiated E-mail	Use Device SMTP Credentials
Device UserID	Your e-mail address
Device Password	Account password or app password **Notes:** • For accounts with two-step verification disabled, use your account password. • For outlook.com or hotmail.com accounts with two-step verification enabled, use an app password. To create an app password, go to the **Outlook Live Account Management** page, and then log in to your account.

Note: For additional setup options for business using Microsoft 365, go to the **Microsoft 365 help page**.

QQ Mail

Note: Make sure that the SMTP service is enabled on your account. To enable the service, from the QQ Mail home page, click **Settings** > **Account**. From the POP3/IMAP/SMTP/Exchange/CardDAV/CalDAV Service section, enable either **POP3/SMTP service** or **IMAP/SMTP service**.

Setting	Value
Primary SMTP Gateway	smtp.qq.com
Primary SMTP Gateway Port	587
Use SSL/TLS	Required
Require Trusted Certificate	Disabled
Reply Address	Your e-mail address
SMTP Server Authentication	Login / Plain
Device-Initiated E-mail	Use Device SMTP Credentials
Device UserID	Your e-mail address
Device Password	Authorization code **Note:** To generate an authorization code, from the QQ Mail home page, click **Settings** > **Account**, and then from the POP3/IMAP/SMTP/Exchange/CardDAV/CalDAV Service section, click **Generate authorization code**.

Sina Mail

Note: Make sure that the POP3/SMTP service is enabled on your account. To enable the service, from the Sina Mail home page, click **Settings** > **More settings** > **User-end POP/IMAP/SMTP**, and then enable **POP3/SMTP service**.

Setting	Value
Primary SMTP Gateway	smtp.sina.com
Primary SMTP Gateway Port	587
Use SSL/TLS	Required
Require Trusted Certificate	Disabled
Reply Address	Your e-mail address
SMTP Server Authentication	Login / Plain
Device-Initiated E-mail	Use Device SMTP Credentials
Device UserID	Your e-mail address
Device Password	Authorization code **Note:** To create an authorization code, from the e-mail home page, click **Settings** > **More settings** > **User-end POP/IMAP/SMTP**, and then enable **Authorization code status**.

Sohu Mail

Note: Make sure that the SMTP service is enabled on your account. To enable the service, from the Sohu Mail home page, click **Options** > **Settings** > **POP3/SMTP/IMAP**, and then enable either **IMAP/SMTP service** or **POP3/SMTP service**.

Setting	Value
Primary SMTP Gateway	smtp.sohu.com
Primary SMTP Gateway Port	465
Use SSL/TLS	Required
Require Trusted Certificate	Disabled
Reply Address	Your e-mail address
SMTP Server Authentication	Login / Plain
Device-Initiated E-mail	Use Device SMTP Credentials
Device UserID	Your e-mail address
Device Password	Independent password **Note:** The independent password is provided when IMAP/SMTP service or POP3/SMTP service is enabled.

Yahoo! Mail

Setting	Value
Primary SMTP Gateway	smtp.mail.yahoo.com
Primary SMTP Gateway Port	587
Use SSL/TLS	Required
Require Trusted Certificate	Disabled
Reply Address	Your e-mail address
SMTP Server Authentication	Login / Plain
Device-Initiated E-mail	Use Device SMTP Credentials
Device UserID	Your e-mail address
Device Password	App password **Note:** To create an app password, go to the **Yahoo Account Security** page, log in to your account, and then click **Generate app password**.

Zoho Mail

Setting	Value
Primary SMTP Gateway	smtp.zoho.com
Primary SMTP Gateway Port	587
Use SSL/TLS	Required
Require Trusted Certificate	Disabled

Setting	Value
Reply Address	Your e-mail address
SMTP Server Authentication	Login / Plain
Device-Initiated E-mail	Use Device SMTP Credentials
Device UserID	Your e-mail address
Device Password	Account password or app password **Notes:** • For accounts with two-step verification disabled, use your account password. • For accounts with two-step verification enabled, use an app password. To create an app password, go to the **Zoho Mail Account Security** page, log in to your account, and then from the Application-Specific Passwords section, click **Generate New Password**.

Loading paper and specialty media

Setting the paper size and type

1 From the home screen, touch **Settings** > **Paper** > **Tray Configuration** > **Paper Size/Type** > select a paper source.

2 Set the paper size and type.

Configuring Universal paper settings

1 From the home screen, touch **Settings** > **Paper** > **Media Configuration** > **Universal Setup**.

2 Configure the settings.

Loading trays

CAUTION—TIPPING HAZARD: To reduce the risk of equipment instability, load each tray separately. Keep all other trays closed until needed.

1 Remove the tray.

Note: To avoid paper jams, do not remove the tray while the printer is busy.

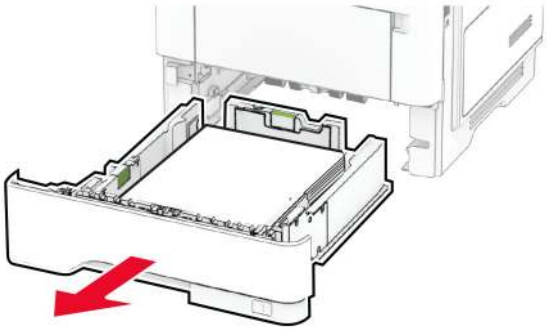

2 Adjust the guides to match the size of the paper that you are loading.

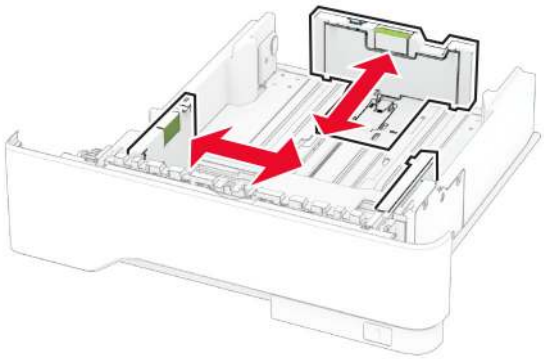

3 Flex, fan, and align the paper edges before loading.

4 Load the paper stack with the printable side facedown, and then make sure that the guides fit snugly against the paper.

Notes:

- Load letterhead facedown with the header toward the front of the tray for one-sided printing.
- Load letterhead faceup with the header toward the back of the tray for two-sided printing.
- Do not slide paper into the tray.
- To avoid paper jams, make sure that the stack height is below the maximum paper fill indicator.

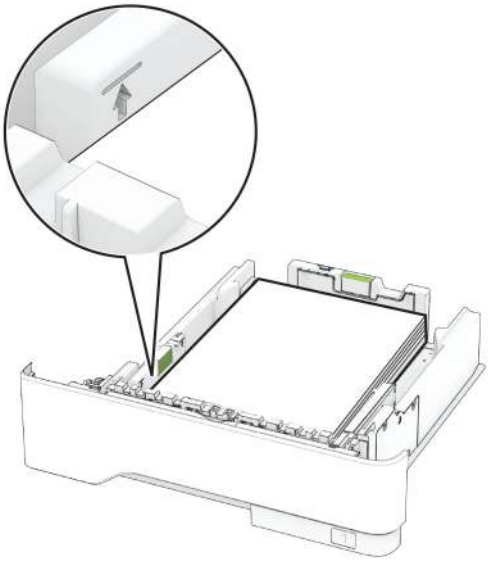

5 Insert the tray.

If necessary, set the paper size and paper type from the control panel to match the paper loaded.

Loading the multipurpose feeder

1 Open the multipurpose feeder.

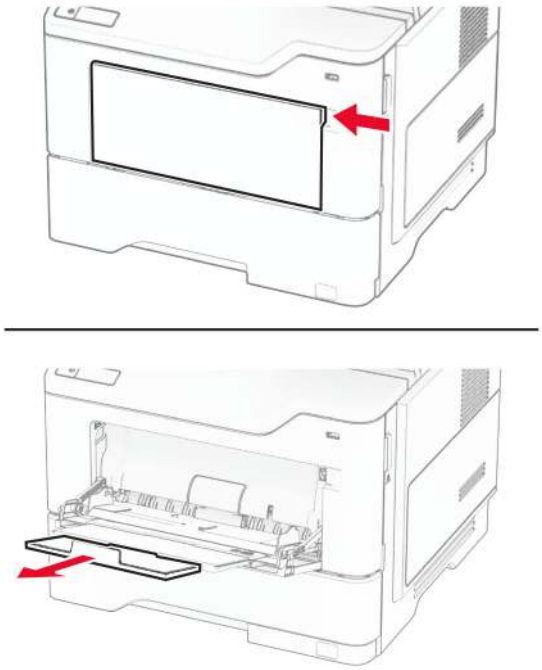

2 Flex, fan, and align the paper edges before loading.

3 Load paper with the printable side faceup.

Notes:

- Load letterhead faceup with the header toward the rear of the printer for one-sided printing.
- Load letterhead facedown with the header toward the front of the printer for two-sided printing.
- Load envelopes with the flap facedown on the left side.

Warning—Potential Damage: Do not use envelopes with stamps, clasps, snaps, windows, coated linings, or self-stick adhesives.

4 Adjust the guide to match the size of the paper that you are loading.

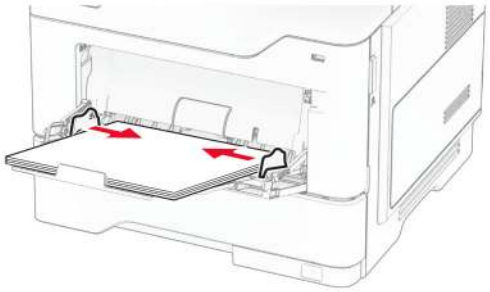

5 From the control panel, set the paper size and paper type to match the paper loaded.

Linking trays

1 From the home screen, touch **Settings** > **Paper** > **Tray Configuration** > select a paper source.

2 Set the same paper size and paper type for the trays that you are linking.

3 From the home screen, touch **Settings** > **Device** > **Maintenance** > **Configuration Menu** > **Tray Configuration** > **Tray Linking**.

4 Touch **Automatic**.

To unlink trays, make sure that no trays have the same paper size and paper type settings.

Warning—Potential Damage: The temperature of the fuser varies according to the specified paper type. To avoid printing issues, match the paper type setting in the printer with the paper loaded in the tray.

Installing and updating software, drivers, and firmware

Installing the printer software

Notes:

- The print driver is included in the software installer package.
- For Macintosh computers with macOS version 10.7 or later, you do not need to install the driver to print on an AirPrint-certified printer. If you want custom printing features, then download the print driver.

1. Obtain a copy of the software installer package.
   - From the software CD that came with your printer.
   - Go to **www.lexmark.com/downloads**.
2. Run the installer, and then follow the instructions on the computer screen.

Installing the fax driver

1. Go to **www.lexmark.com/downloads**, search for your printer model, and then download the appropriate installer package.
2. From your computer, click **Printer Properties**, and then navigate to the **Configuration** tab.
3. Select **Fax**, and then click **Apply**.

Adding printers to a computer

Before you begin, do one of the following:

- Connect the printer and the computer to the same network. For more information on connecting the printer to a network, see "Connecting the printer to a Wi-Fi network" on page 71.
- Connect the computer to the printer. For more information, see "Connecting a computer to the printer" on page 73.
- Connect the printer to the computer using a USB cable. For more information, see "Attaching cables" on page 20.

  Note: The USB cable is sold separately.

For Windows users

1. From a computer, install the print driver.

   Note: For more information, see "Installing the printer software" on page 49.
2. Open the printers folder, and then click **Add a printer or scanner**.
3. Depending on your printer connection, do one of the following:
   - Select a printer from the list, and then click **Add device**.
   - Click **Show Wi-Fi Direct printers**, select a printer, and then click **Add device**.
   - Click **The printer that I want isn't listed**, and then from the Add Printer window, do the following:
     a. Select **Add a printer using a TCP/IP address or hostname**, and then click **Next**.
     b. In the "Hostname or IP address" field, type the printer IP address, and then click **Next**.

Notes:

- View the printer IP address on the printer home screen. The IP address appears as four sets of numbers separated by periods, such as 123.123.123.123.
- If you are using a proxy server, then temporarily disable it to load the web page correctly.

c Select a print driver, and then click **Next**.

d Select **Use the print driver that is currently installed (recommended)**, and then click **Next**.

e Type a printer name, and then click **Next**.

f Select a printer sharing option, and then click **Next**.

g Click **Finish**.

For Macintosh users

1 From a computer, open **Printers & Scanners**.

2 Click +, and then select a printer.

3 From the Use menu, select a print driver.

Notes:

- To use the Macintosh print driver, select either **AirPrint** or **Secure AirPrint**.
- If you want custom printing features, then select the Lexmark print driver. To install the driver, see "Installing the printer software" on page 49.

4 Add the printer.

Exporting or importing a configuration file

You can export the configuration settings of your printer into a text file, and then import the file to apply the settings to other printers.

1 Open a web browser, and then type the printer IP address in the address field.

Notes:

- View the printer IP address on the printer home screen. The IP address appears as four sets of numbers separated by periods, such as 123.123.123.123.
- If you are using a proxy server, then temporarily disable it to load the web page correctly.

2 From the Embedded Web Server, click **Export Configuration** or **Import Configuration**.

3 Follow the instructions on the screen.

4 If the printer supports applications, then do the following:

a Click **Apps** > select the application > **Configure**.

b Click **Export** or **Import**.

Adding available options in the print driver

For Windows users

1 Open the printers folder.

2 Select the printer you want to update, and then do either of the following:
   - For Windows 7 or later, select **Printer properties**.
   - For earlier versions, select **Properties**.

3 Navigate to the Configuration tab, and then select **Update Now - Ask Printer**.

4 Apply the changes.

For Macintosh users

1 From System Preferences in the Apple menu, navigate to your printer, and then select **Options & Supplies**.

2 Navigate to the list of hardware options, and then add any installed options.

3 Apply the changes.

Updating firmware

Updating the firmware using the control panel

Using the notification center

This method is applicable only in some printer models.

1 From the control panel, navigate to the notification center, and then select **Firmware update available**.

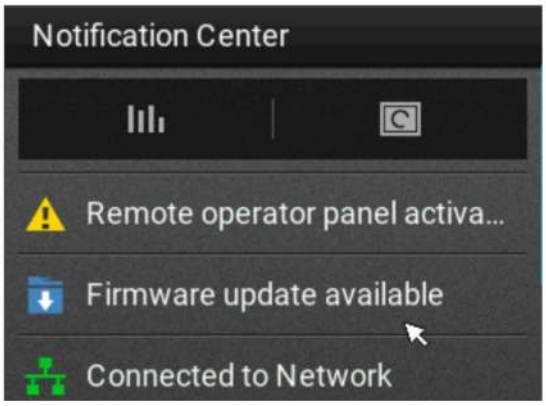

2 Select **Install now**.

The printer reboots automatically after the update.

Using the Settings menu

1 From the control panel, navigate to **Settings** > **Device** > **Update Firmware**.

2 Depending on your printer model, select **Check for updates** or **Check for updates now**.

3 If a new update is available, then select **Install now**.

The printer reboots automatically after the update.

Updating the firmware using the Embedded Web Server

Before you begin, make sure that:

- You have downloaded the latest printer firmware from **https://support.lexmark.com** and saved it to your flash drive or computer.

  Note: To deploy the printer firmware, extract the .fls firmware file from the ZIP package.
- You are not using a special code on your printer to avoid losing this functionality.

Warning—Potential Damage: Make sure that all printers receiving firmware updates are turned on during the entire firmware update process. Turning off a printer during a firmware update can severely damage it.

If the printer is connected to the network when checking for updates, then downloading the firmware is not required.

1 Open a web browser, and then type the printer IP address in the address field.

  Notes:

  - View the printer IP address on the printer home screen. The IP address appears as four sets of numbers separated by periods, such as 123.123.123.123.
  - If you are using a proxy server, then temporarily disable it to load the web page correctly.

2 Click **Device**.

3 Scroll down, and then click **Update Firmware**.

4 Depending on your printer model, click **Check for updates** or **Check for updates now**.

  If a new update is available, then click **I agree, start update**.

The printer reboots automatically after the update.

Installing hardware options

Available internal options

- Intelligent storage drive
  - Fonts
    - Simplified Chinese
    - Traditional Chinese
    - Japanese
    - Korean
    - Arabic
  - Mass storage
- Hard disk
- Licensed features
  - IPDS
  - Bar Code
- Internal solutions port
  - RS-232C Serial Interface Card
  - Parallel 1284-B Interface Card
  - MarkNet™ N8230 Fiber Ethernet

Note: An intelligent storage drive or a hard disk is required to activate Forms Merge and some IPDS features.

Installing optional trays

CAUTION—SHOCK HAZARD: To avoid the risk of electrical shock, if you are accessing the controller board or installing optional hardware or memory devices sometime after setting up the printer, then turn the printer off, and unplug the power cord from the electrical outlet before continuing. If you have any other devices attached to the printer, then turn them off as well, and unplug any cables going into the printer.

1. Turn off the printer.
2. Unplug the power cord from the electrical outlet, and then from the printer.
3. Unpack the optional tray, and then remove all packing material.
4. Align the printer with the optional tray, and then lower the printer into place.

   CAUTION—POTENTIAL INJURY: If the printer weight is greater than 20 kg (44 lb), then it may require two or more people to lift it safely.

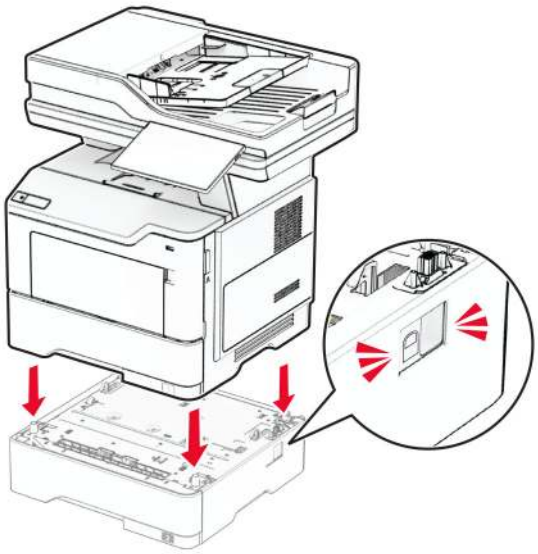

5 Connect the power cord to the printer, and then to the electrical outlet.

CAUTION—POTENTIAL INJURY: To avoid the risk of fire or electrical shock, connect the power cord to an appropriately rated and properly grounded electrical outlet that is near the product and easily accessible.

6 Turn on the printer.

Add the tray in the print driver to make it available for print jobs. For more information, see "Adding available options in the print driver" on page 51.

Installing the intelligent storage drive

CAUTION—SHOCK HAZARD: To avoid the risk of electrical shock, if you are accessing the controller board or installing optional hardware or memory devices sometime after setting up the printer, then turn the printer off, and unplug the power cord from the electrical outlet before continuing. If you have any other devices attached to the printer, then turn them off as well, and unplug any cables going into the printer.

1 Turn off the printer.

2 Unplug the power cord from the electrical outlet, and then from the printer.

3 Using a flat-head screwdriver, open the controller board access cover.

Warning—Potential Damage: Controller board electronic components are easily damaged by static electricity. Touch a metal surface on the printer before touching any controller board components or connectors.

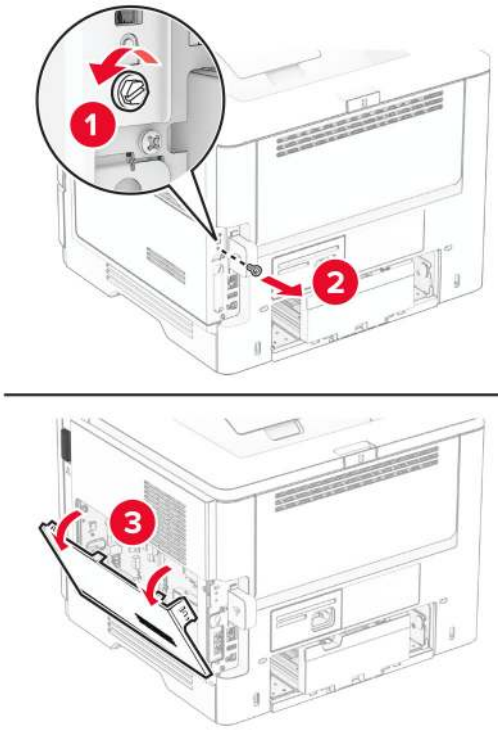

4 Remove the fax card.

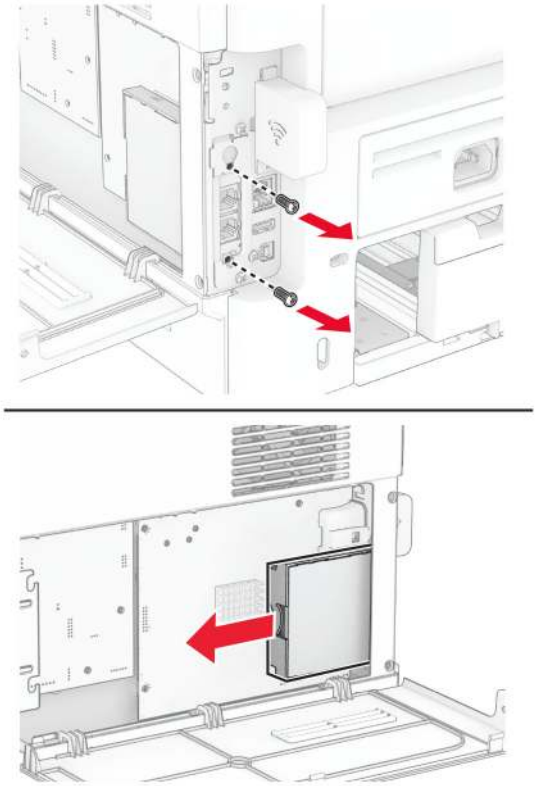

5 Unpack the intelligent storage drive.

Warning—Potential Damage: Avoid touching the connection points along the edge of the storage drive.

6 Locate the ISD connector.

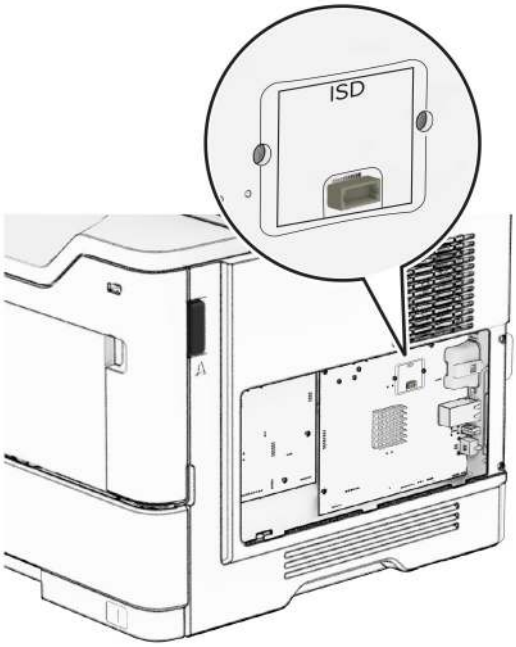

7 Insert the ISD to its connector.

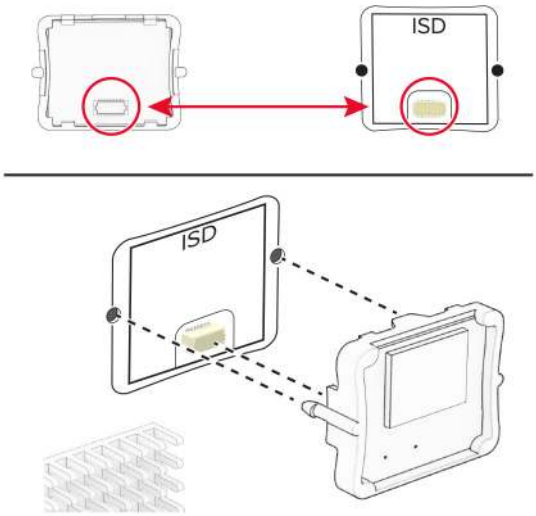

8 Install the fax card, and then install the screws.

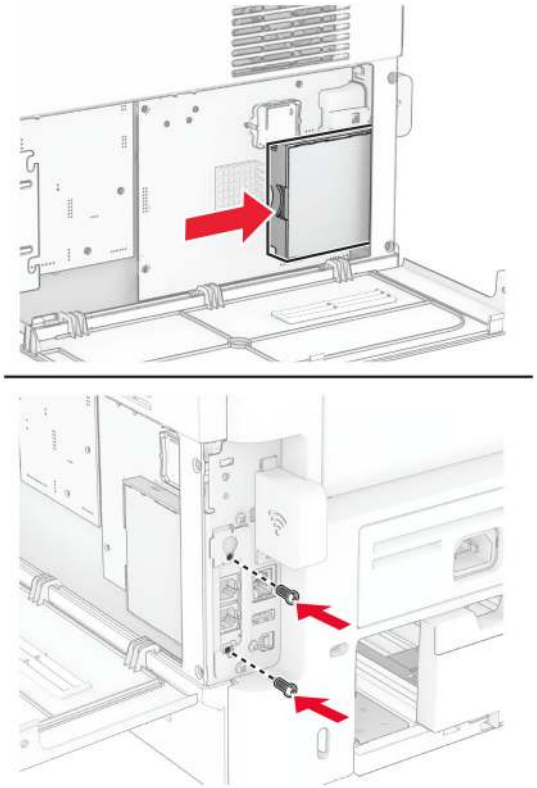

9 Close the controller board access cover, and then install the screw.

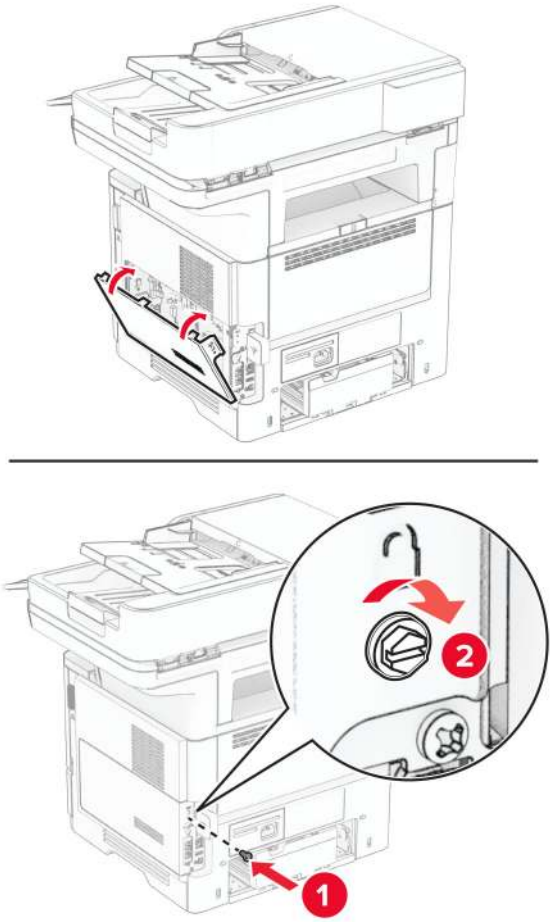

10 Connect the power cord to the printer, and then to the electrical outlet.

CAUTION—POTENTIAL INJURY: To avoid the risk of fire or electrical shock, connect the power cord to an appropriately rated and properly grounded electrical outlet that is near the product and easily accessible.

11 Turn on the printer.

Installing a printer hard disk

Note: These instructions apply only to printers that support printer hard disk.

CAUTION—SHOCK HAZARD: To avoid the risk of electrical shock, if you are accessing the controller board or installing optional hardware or memory devices sometime after setting up the printer, then turn the printer off, and unplug the power cord from the electrical outlet before continuing. If you have any other devices attached to the printer, then turn them off as well, and unplug any cables going into the printer.

1 Turn off the printer.

2 Unplug the power cord from the electrical outlet, and then from the printer.

3 Using a flat-head screwdriver, open the controller board access cover.

Warning—Potential Damage: Controller board electronic components are easily damaged by static electricity. Touch a metal surface on the printer before touching any controller board components or connectors.

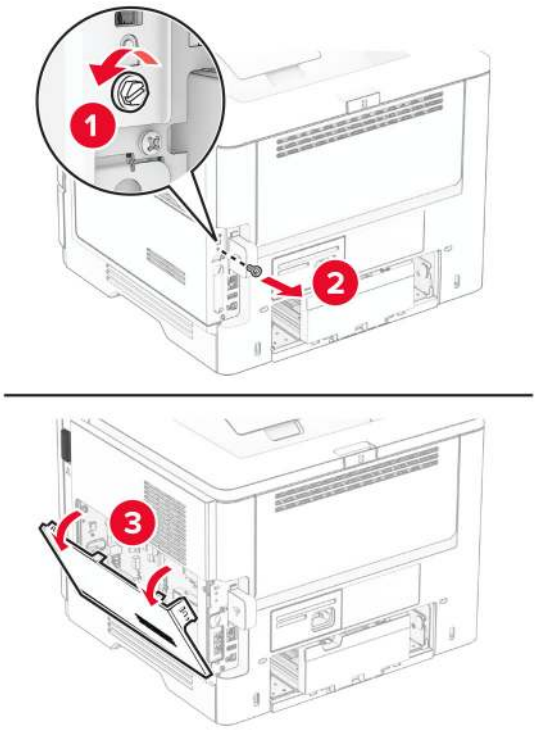

4 Unpack the hard disk.

5 Attach the hard disk to the controller board, and then install the screws.

Warning—Potential Damage: Do not touch or press the center of the hard disk.

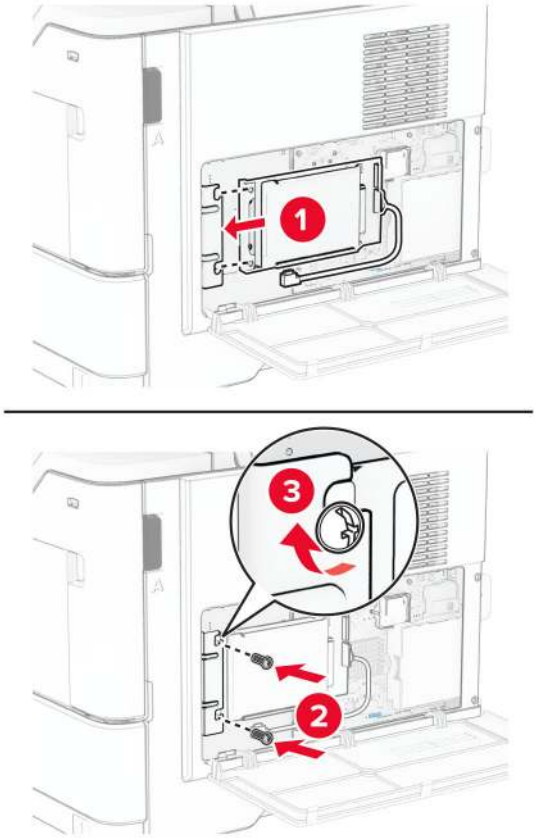

6 Attach the hard disk interface cable to the controller board.

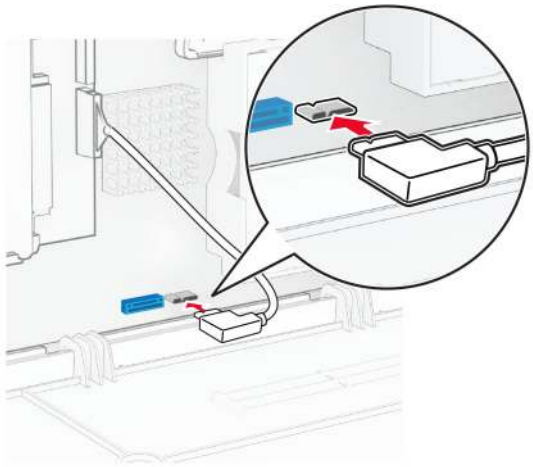

7 Close the controller board access cover, and then install the screw.

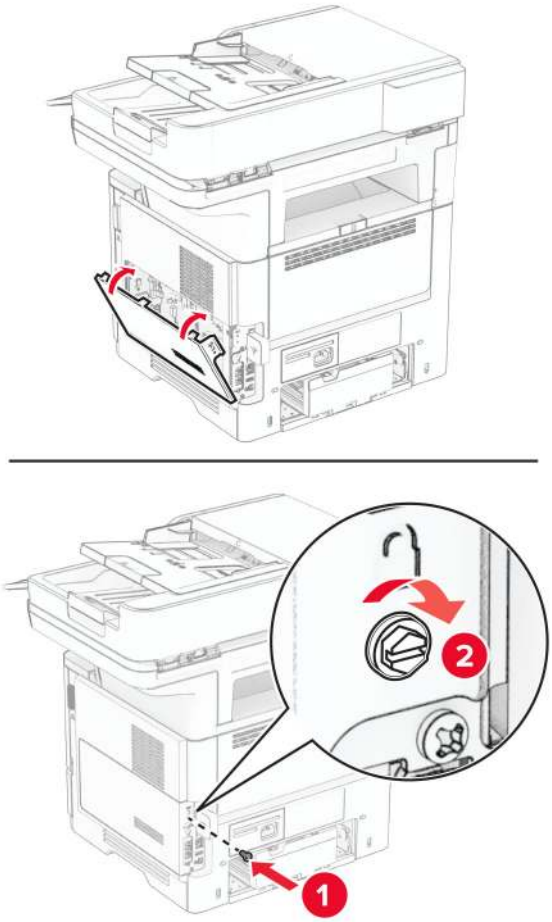

8 Connect the power cord to the printer, and then to the electrical outlet.

CAUTION—POTENTIAL INJURY: To avoid the risk of fire or electrical shock, connect the power cord to an appropriately rated and properly grounded electrical outlet that is near the product and easily accessible.

9 Turn on the printer.

Installing an internal solutions port

CAUTION—SHOCK HAZARD: To avoid the risk of electrical shock, if you are accessing the controller board or installing optional hardware or memory devices sometime after setting up the printer, then turn the printer off, and unplug the power cord from the electrical outlet before continuing. If you have any other devices attached to the printer, then turn them off as well, and unplug any cables going into the printer.

1 Turn off the printer.

2 Unplug the power cord from the electrical outlet, and then from the printer.

3 Unpack the internal solutions port (ISP) kit.

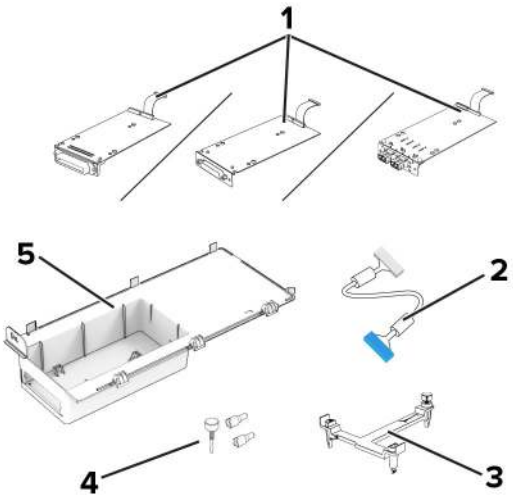

1	ISP • RS-232C Serial Interface Card • Parallel 1284-B Interface Card • MarkNet N8230 Fiber Ethernet
2	ISP extended cable
3	Mounting bracket
4	Thumbscrews
5	Housing

4 Remove the preinstalled interface cable from the ISP.

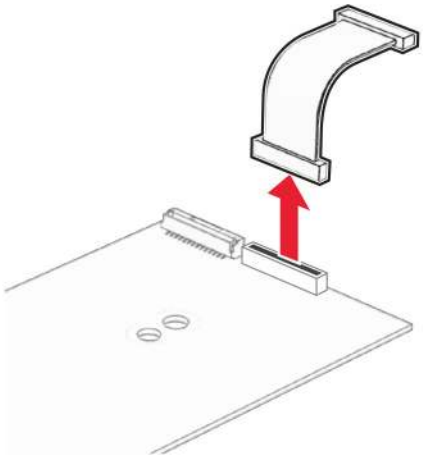

5 Install the ISP into its housing.

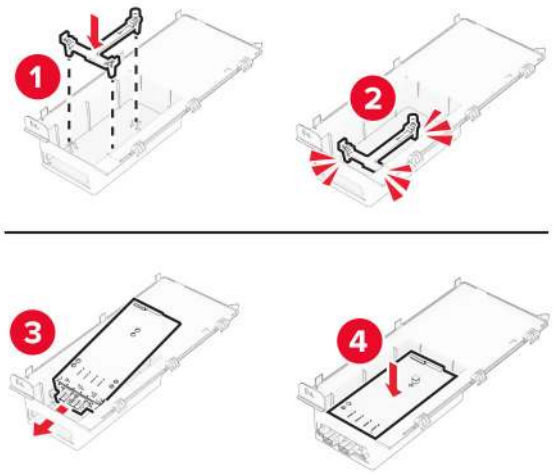

6 Secure the ISP in place, and then attach the ISP extended cable.

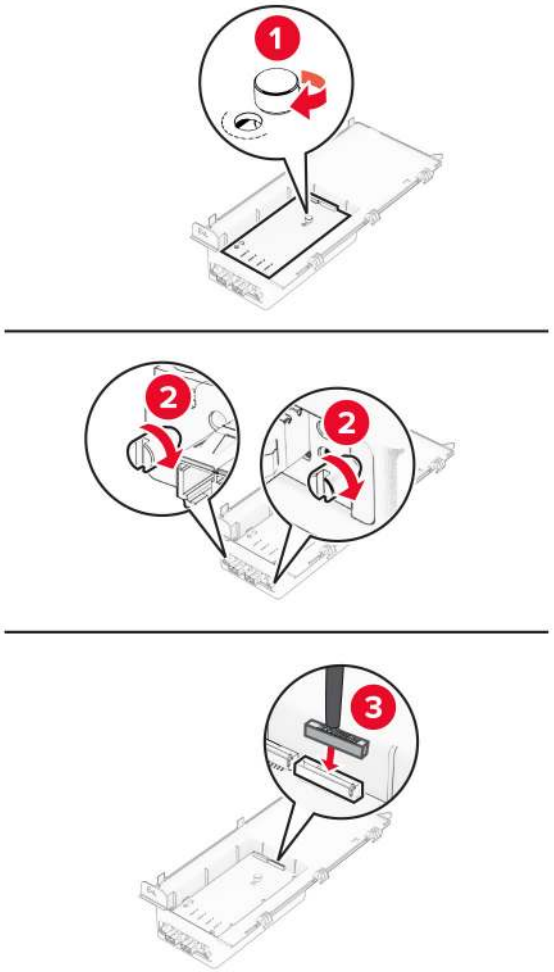

7 Using a flat-head screwdriver, remove the controller board access cover.

Warning—Potential Damage: Controller board electronic components are easily damaged by static electricity. Touch a metal surface on the printer before touching any controller board electronic components or connectors.

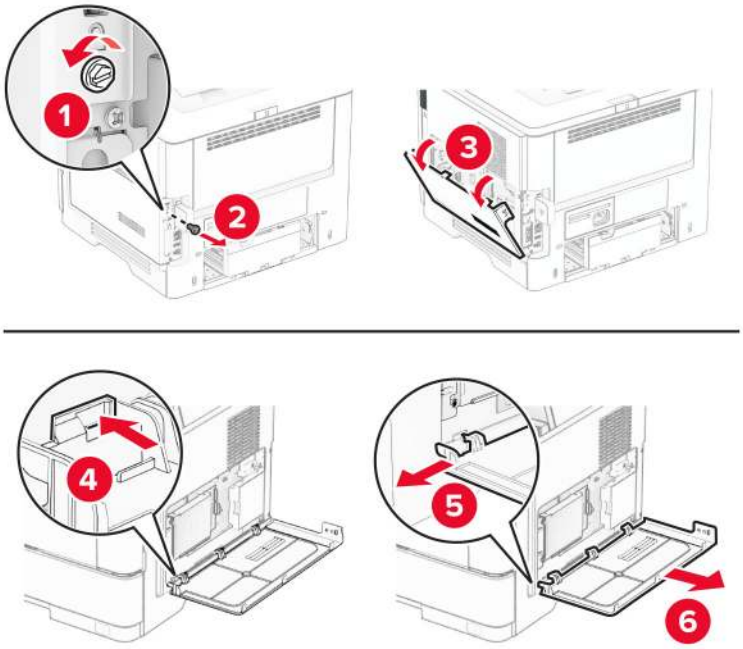

8 Attach the ISP kit to the printer.

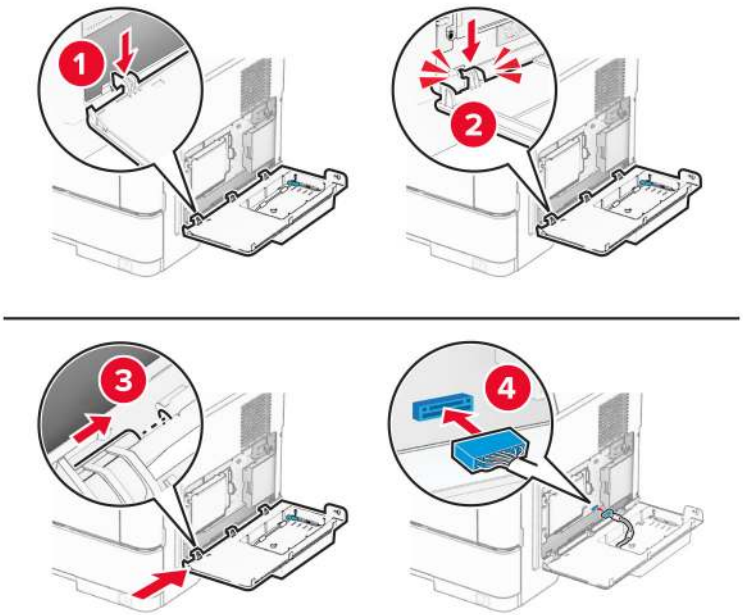

9 Close the ISP kit, and then install the screw.

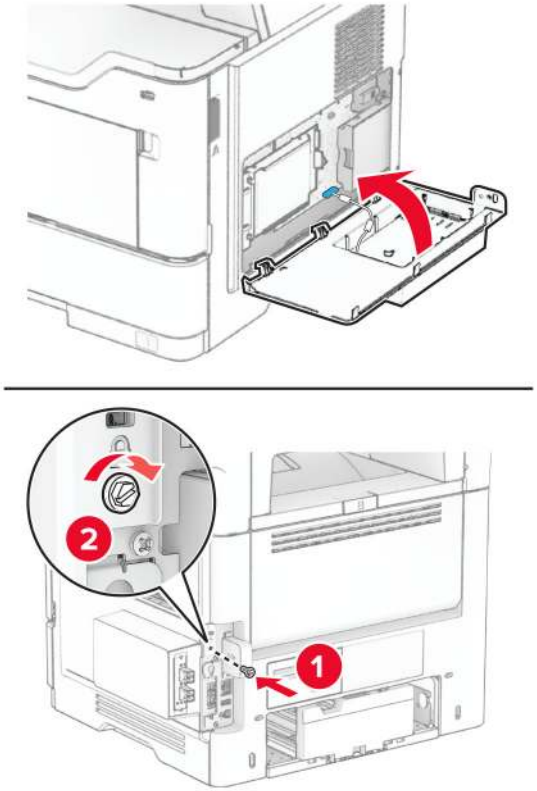

10 Connect the power cord to the printer, and then to the electrical outlet.

CAUTION—POTENTIAL INJURY: To avoid the risk of fire or electrical shock, connect the power cord to an appropriately rated and properly grounded electrical outlet that is near the product and easily accessible.

11 Turn on the printer.

Installing the convenience stapler

1 Turn off the printer.

2 Unplug the power cord from the electrical outlet, and then from the printer.

3 Unpack the convenience stapler.

4 Remove the column covers.

Note: Do not throw away the column covers.

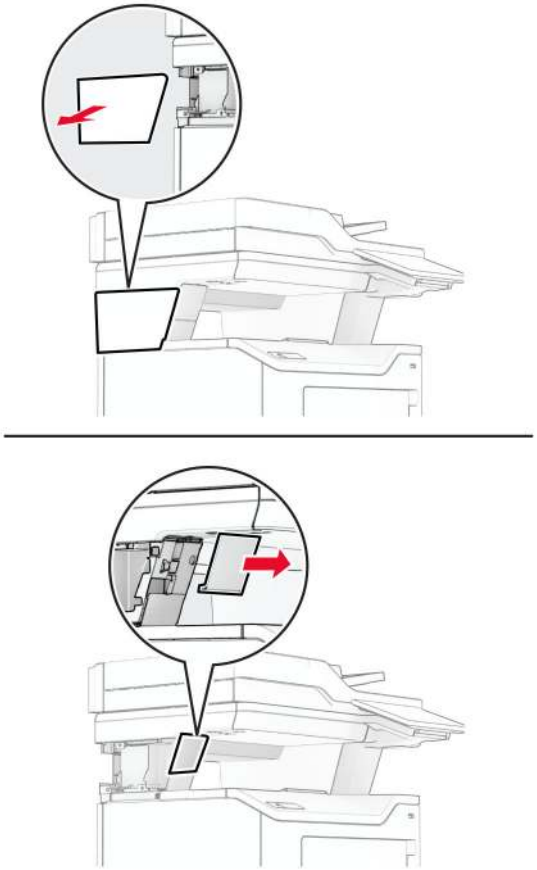

5 Insert the power supply through the printer, and then connect it to the convenience stapler.

Note: To avoid damaging the convenience stapler, use only the power supply that came with it.

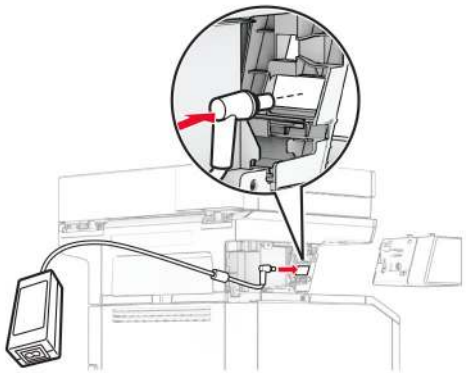

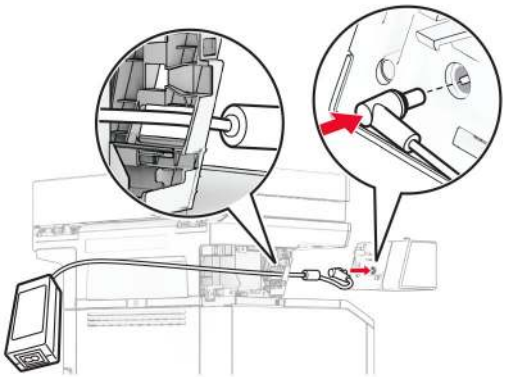

6 Install the convenience stapler.

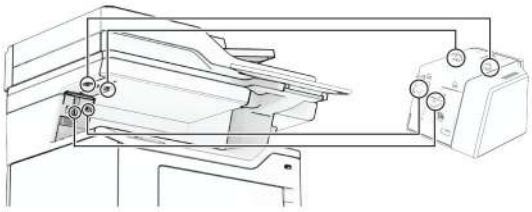

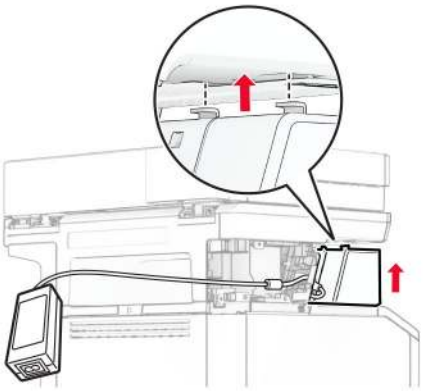

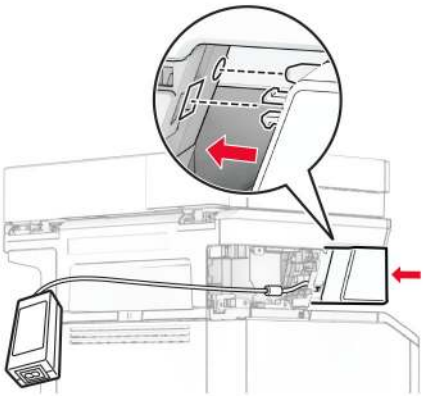

7 Position the power supply properly.

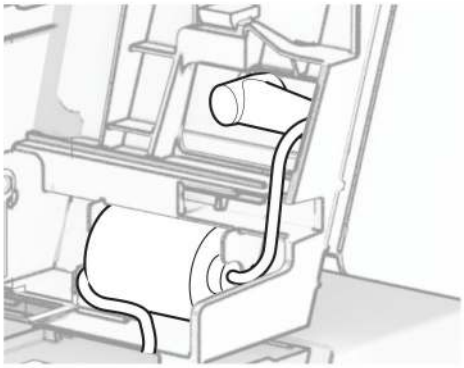

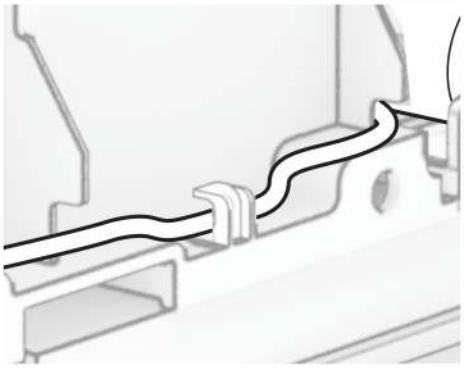

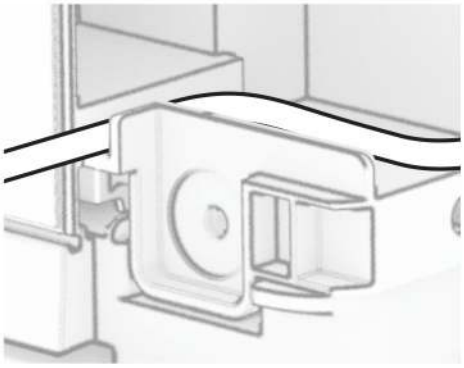

8 Attach the column cover.

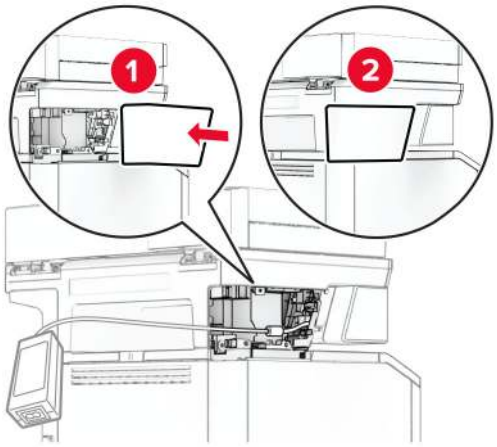

Note: Secure the power supply properly.

9 Connect one end of the stapler power cord to the power supply, and then the other end to the electrical outlet.

10 Connect one end of the printer power cord to the printer, and then the other end to the electrical outlet.

CAUTION—POTENTIAL INJURY: To avoid the risk of fire or electrical shock, connect the power cord to an appropriately rated and properly grounded electrical outlet that is near the product and easily accessible.

11 Turn on the printer.

Networking

Wireless support

Printer model	Machine type	Model number	Wireless
MX532adwe	7020	476	X
		486	✓
MX635adwe		676	X
		686	✓
XM3350		689	✓

Connecting the printer to a Wi-Fi network

Make sure that Active Adapter is set to Auto. From the home screen, touch **Settings** > **Network/Ports** > **Network Overview** > **Active Adapter**.

Using the control panel

1. From the home screen, touch **Settings** > **Network/Ports** > **Wireless** > **Setup On Printer Panel** > **Choose Network**.
2. Select a Wi-Fi network, and then type the network password.

   Note: For Wi-Fi-network-ready printer models, a prompt for Wi-Fi network setup appears during initial setup.

Using Lexmark Mobile Assistant

1. Depending on your mobile device, download the Lexmark Mobile Assistant application from either the Google Play™ store or App Store online store.
2. From the printer home screen, touch **Settings** > **Network/Ports** > **Wireless** > **Setup Using Mobile App** > **Printer ID**.
3. From your mobile device, launch the application, and then accept the Terms of Use.

   Note: If necessary, grant permissions.
4. Tap **Connect to Printer** > **Go to Wi-Fi Settings**.
5. Connect your mobile device to the printer wireless network.
6. Return to the application, and then tap **Setup Wi-Fi Connection**
7. Select a Wi-Fi network, and then type the network password.
8. Tap **Done**.

Connecting the printer to a wireless network using Wi-Fi Protected Setup (WPS)

Before you begin, make sure that:

- The access point (wireless router) is WPS-certified or WPS-compatible. For more information, see the documentation that came with your access point.
- A wireless network adapter is installed in your printer. For more information, see the instructions that came with the adapter.
- Active Adapter is set to Auto. From the home screen, touch **Settings** > **Network/Ports** > **Network Overview** > **Active Adapter**.

Using the Push Button method

1. From the home screen, touch **Settings** > **Network/Ports** > **Wireless** > **Wi-Fi Protected Setup** > **Start Push Button Method**.
2. Follow the instructions on the display.

Using the personal identification number (PIN) method

1. From the home screen, touch **Settings** > **Network/Ports** > **Wireless** > **Wi-Fi Protected Setup** > **Start PIN Method**.
2. Copy the eight-digit WPS PIN.
3. Open a web browser, and then type the IP address of your access point in the address field.

   Notes:

   - To know the IP address, see the documentation that came with your access point.
   - If you are using a proxy server, then temporarily disable it to load the web page correctly.
4. Access the WPS settings. For more information, see the documentation that came with your access point.
5. Enter the eight-digit PIN, and then save the changes.

Configuring Wi-Fi Direct

Wi-Fi Direct® is a Wi-Fi-based peer-to-peer technology that allows wireless devices to connect directly to a Wi-Fi Direct-enabled printer without using an access point (wireless router).

Make sure that Active Adapter is set to Auto. From the home screen, touch **Settings** > **Network/Ports** > **Network Overview** > **Active Adapter**.

1. From the home screen, touch **Settings** > **Network/Ports** > **Wi-Fi Direct**.
2. Configure the settings.
   - **Enable Wi-Fi Direct**—Enables the printer to broadcast its own Wi-Fi Direct network.
   - **Wi-Fi Direct Name**—Assigns a name for the Wi-Fi Direct network.
   - **Wi-Fi Direct Password**—Assigns the password for negotiating the wireless security when using the peer-to-peer connection.

- **Show Password on Setup Page**—Shows the password on the Network Setup Page.
- **Auto-Accept Push Button Requests**—Lets the printer accept connection requests automatically.

  Note: Accepting push-button requests automatically is not secured.

Notes:

- By default, the Wi-Fi Direct network password is not visible on the printer display. To show the password, enable the password peek icon. From the home screen, touch **Settings** > **Security** > **Miscellaneous** > **Enable Password/PIN Reveal**.
- You can see the password of the Wi-Fi Direct network without showing it on the printer display. From the home screen, touch **Settings** > **Reports** > **Network** > **Network Setup Page**.

Connecting a mobile device to the printer

Before connecting your mobile device, make sure that Wi-Fi Direct has been configured. For more information, see "Configuring Wi-Fi Direct" on page 72.

Connecting using Wi-Fi Direct

Note: These instructions apply only to Android mobile devices.

1. From the mobile device, go to the settings menu.
2. Enable **Wi-Fi**, and then tap **Wi-Fi Direct**.
3. Select the printer Wi-Fi Direct name.
4. Confirm the connection on the printer control panel.

Connecting using Wi-Fi

1. From the mobile device, go to the settings menu.
2. Tap **Wi-Fi**, and then select the printer Wi-Fi Direct name.

   Note: The string DIRECT-xy (where x and y are two random characters) is added before the Wi-Fi Direct name.
3. Enter the Wi-Fi Direct password.

Connecting a computer to the printer

Before connecting your computer, make sure that Wi-Fi Direct has been configured. For more information, see "Configuring Wi-Fi Direct" on page 72.

For Windows users

1. Open the printers folder, and then click **Add a printer or scanner**.
2. Click **Show Wi-Fi Direct printers**, and then select the printer Wi-Fi Direct name.
3. From the printer display, take note of the eight-digit PIN of the printer.
4. Enter the PIN on the computer.

   Note: If the print driver is not already installed, then Windows downloads the appropriate driver.

For Macintosh users

1. Click the wireless icon, and then select the printer Wi-Fi Direct name.

   Note: The string DIRECT-xy (where x and y are two random characters) is added before the Wi-Fi Direct name.

2. Type the Wi-Fi Direct password.

Note: Switch your computer back to its previous network after disconnecting from the Wi-Fi Direct network.

Deactivating the Wi-Fi network

1. From the home screen, touch **Settings** > **Network/Ports** > **Network Overview** > **Active Adapter** > **Standard Network**.
2. Follow the instructions on the display.

Checking the printer connectivity

1. From the home screen, touch **Settings** > **Reports** > **Network** > **Network Setup Page**.
2. Check the first section of the network setup page, and confirm that the status is connected.

   If the status is not connected, then the LAN drop may be inactive, or the network cable may be malfunctioning. Contact your administrator for assistance.

Secure the printer

Locating the security slot

The printer is equipped with a security lock feature. Attach a security lock compatible with most laptop computers in the location shown to secure the printer in place.

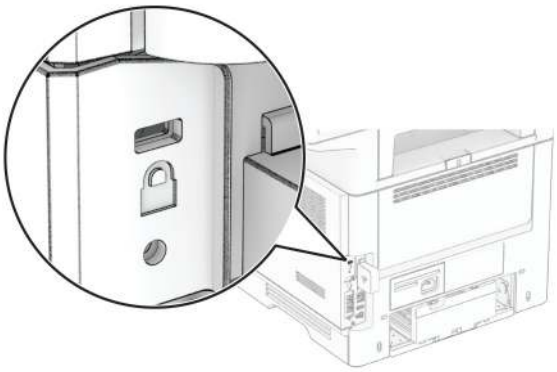

Erasing printer memory

To erase volatile memory or buffered data in your printer, turn off the printer.

To erase nonvolatile memory, device and network settings, security settings, and embedded solutions, do the following:

1. From the home screen, touch **Settings** > **Device** > **Maintenance** > **Out of Service Erase**.
2. Touch the **Sanitize all information on nonvolatile memory** check box, and then touch **ERASE**.
3. Touch **Start initial setup wizard** or **Leave printer offline**, and then touch **Next**.
4. Start the operation.

Note: This process also destroys the encryption key that is used to protect user data. Destroying the encryption key makes the data irrecoverable.

Erasing printer storage drive

1. From the home screen, touch **Settings** > **Device** > **Maintenance** > **Out of Service Erase**.
2. Depending on the storage drive that is installed on your printer, do either of the following:
   - For hard disk, touch the **Sanitize all information on hard disk** check box, touch **ERASE**, and then select a method to erase data.

     Note: The process to sanitize the hard disk can take from several minutes to more than an hour, making the printer unavailable for other tasks.
   - For intelligent storage drive (ISD), touch **Erase Intelligent Storage Drive**, and then touch **ERASE** to erase all user data.
3. Start the operation.

Restoring factory default settings

1 From the home screen, touch **Settings** > **Device** > **Restore Factory Defaults**.

2 Touch **Restore Settings** > select the settings that you want to restore > **RESTORE**.

3 Start the operation.

Statement of Volatility

Type of memory	Description
Volatile memory	The printer uses standard random access memory (RAM) to buffer temporarily user data during simple print and copy jobs.
Nonvolatile memory	The printer may use two forms of non-volatile memory: EEPROM and NAND (flash memory). Both types store the operating system, printer settings, and network information. They also store scanner and bookmark settings and embedded solutions.
Hard disk storage drive	Some printers may have a hard disk drive installed. The printer hard disk is designed for printer-specific functionality. The hard disk lets the printer retain buffered user data from complex print jobs, form data, and font data.
Intelligent storage drive (ISD)	Some printers may have an ISD installed. ISD uses non-volatile flash memory to store user data from complex print jobs, form data, and font data.

Erase the content of any installed printer memory in the following circumstances:

- The printer is decommissioned.
- The printer hard disk or ISD is replaced.
- The printer is moved to a different department or location.
- The printer is serviced by someone from outside your organization.
- The printer is removed from your premises for service.
- The printer is sold to another organization.

Note: To dispose a storage drive, follow the policies and procedures of your organization.

Print

Printing from a computer

Note: For labels, card stock, and envelopes, set the paper size and type in the printer before printing the document.

1. From the document that you are trying to print, open the Print dialog.
2. If necessary, adjust the settings.
3. Print the document.

Printing from a mobile device

Printing from a mobile device using Lexmark Mobile Print

Printing from a mobile device using Lexmark Mobile Print

Lexmark™ Mobile Print allows you to send documents and images directly to a supported Lexmark printer.

1. Open the document, and then send or share the document to Lexmark Mobile Print.

   Note: Some third-party applications may not support the send or share feature. For more information, see the documentation that came with the application.
2. Select a printer.
3. Print the document.

Printing from a mobile device using Lexmark Print

Lexmark Print is a mobile printing solution for mobile devices running on Android™ version 6.0 or later. It lets you send documents and images to network-connected printers and print management servers.

Notes:

- Make sure that you download the Lexmark Print application from the Google Play store and enable it in the mobile device.
- Make sure that the printer and the mobile device are connected to the same network.

1. From your mobile device, select a document from the file manager.
2. Send or share the document to Lexmark Print.

   Note: Some third-party applications may not support the send or share feature. For more information, see the documentation that came with the application.
3. Select a printer, and then adjust the settings, if necessary.
4. Print the document.

Printing from a mobile device using Mopria Print Service

Mopria® Print Service is a mobile printing solution for mobile devices running on Android version 5.0 or later. It allows you to print directly to any Mopria-certified printer.

Note: Make sure that you download the Mopria Print Service application from the Google Play store and enable it in the mobile device.

1. From your Android mobile device, launch a compatible application or select a document from your file manager.
2. Tap ⋮ > **Print**.
3. Select a printer, and then adjust the settings, if necessary.
4. Tap 🖶.

Printing from a mobile device using AirPrint

The AirPrint software feature is a mobile printing solution that allows you to print directly from Apple devices to an AirPrint-certified printer.

Notes:

- Make sure that the Apple device and the printer are connected to the same network. If the network has multiple wireless hubs, then make sure that both devices are connected to the same subnet.
- This application is supported only in some Apple devices.

1. From your mobile device, select a document from your file manager or launch a compatible application.
2. Tap ⬆ > **Print**.
3. Select a printer, and then adjust the settings, if necessary.
4. Print the document.

Printing from a mobile device using Wi-Fi Direct®

Wi-Fi Direct® is a printing service that lets you print to any Wi-Fi Direct-ready printer.

Note: Make sure that the mobile device is connected to the printer wireless network. For more information, see "Connecting a mobile device to the printer" on page 73.

1. From your mobile device, launch a compatible application or select a document from your file manager.
2. Depending on your mobile device, do one of the following:
   - Tap ⋮ > **Print**.
   - Tap ⬆ > **Print**.
   - Tap ··· > **Print**.
3. Select a printer, and then adjust the settings, if necessary.
4. Print the document.

Printing from a flash drive

1 Insert the flash drive.

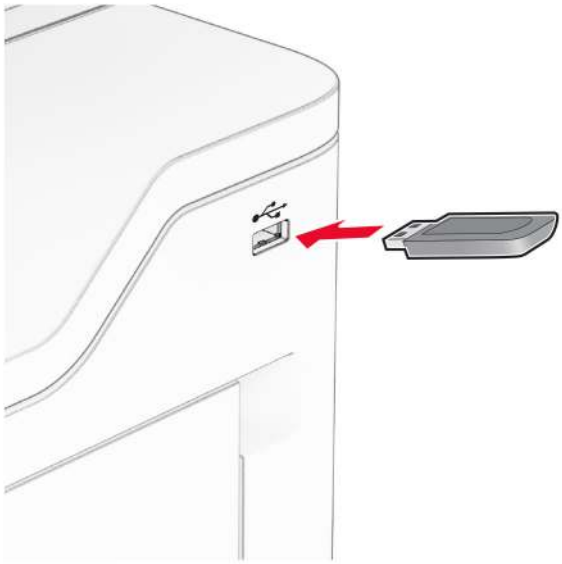

Notes:

- If you insert the flash drive when an error message appears, then the printer ignores the flash drive.
- If you insert the flash drive while the printer is processing other print jobs, then **Busy** appears on the display.

2 From the display, touch the document that you want to print.

If necessary, configure the print settings.

3 Print the document.

To print another document, touch **USB Drive**.

Warning—Potential Damage: To avoid loss of data or printer malfunction, do not touch the flash drive or the printer in the area shown while actively printing, reading, or writing from the memory device.

Supported flash drives and file types

Flash drives

- Flash drives that support USB 2.0 or lower.
- Flash drives that support a New Technology File System (NFTS) or the File Allocation Table (FAT32) file system.

File types

Documents	Images
• PDF (version 1.7 or earlier) • Microsoft file formats (DOC, DOCX, XLS, XLSX, PPT, PPTX)	• JPEG or JPG • TIFF or TIF • GIF • BMP • PNG • PCX • DCX

Configuring confidential jobs

1 From the home screen, touch **Settings** > **Security** > **Confidential Print Setup**.

2 Configure the settings.

Setting	Description
Max Invalid PIN	Set the limit for entering an invalid PIN. **Note:** When the limit is reached, the print jobs for that user name are deleted.
Confidential Job Expiration	Set an individual expiration time for each held job before it is automatically deleted from the printer memory, hard disk, or intelligent storage drive. **Note:** A held job is either Confidential, Repeat, Reserve, or Verify.
Repeat Job Expiration	Set the expiration time for print jobs that you want to repeat.
Verify Job Expiration	Set the expiration time for printing a copy of a job for you to check its quality before printing the remaining copies.
Reserve Job Expiration	Set the expiration time for jobs that you want to store in the printer for printing later.
Require All Jobs to be Held	Set the printer to hold all print jobs.
Keep duplicate documents	Set the printer to keep all documents with the same file name.

Printing confidential and other held jobs

For Windows users

1. With a document open, click **File** > **Print**.
2. Select a printer, and then click **Properties**, **Preferences**, **Options**, or **Setup**.
3. Click **Print and Hold**.
4. Select **Use Print and Hold**, and then assign a user name.
5. Select the print job type (Confidential, Repeat, Reserve, or Verify).

   If you select **Confidential**, then secure the print job with a personal identification number (PIN).
6. Click **OK** or **Print**.
7. From the printer home screen, release the print job.
   - For confidential print jobs, touch **Held jobs** > select your user name > **Confidential** > enter the PIN > select the print job > configure the settings > **Print**.
   - For other print jobs, touch **Held jobs** > select your user name > select the print job > configure the settings > **Print**.

For Macintosh users

Using AirPrint

1. With a document open, choose **File** > **Print**.
2. Select a printer, and then from the drop-down menu following the Orientation menu, choose **PIN Printing**.
3. Enable **Print with PIN**, and then enter a four-digit PIN.

4 Click **Print**.

5 From the printer home screen, release the print job. Touch **Held jobs** > select your computer name > **Confidential** > enter the PIN > select the print job > **Print**.

Using the print driver

1 With a document open, choose **File** > **Print**.

2 Select a printer, and then from the drop-down menu following the Orientation menu, choose **Print and Hold**.

3 Choose **Confidential Print**, and then enter a four-digit PIN.

4 Click **Print**.

5 From the printer home screen, release the print job. Touch **Held jobs** > select your computer name > **Confidential** > select the print job > enter the PIN > **Print**.

Printing a font sample list

1 From the home screen, touch **Settings** > **Reports** > **Print** > **Print Fonts**.

2 Touch **PCL Fonts** or **PS Fonts**.

Printing a directory list

From the home screen, touch **Settings** > **Reports** > **Print** > **Print Directory**.

Placing separator sheets between copies

1 From the home screen, touch **Settings** > **Print** > **Layout** > **Separator Sheets** > **Between Copies**.

2 Print the document.

Canceling a print job

1 From the home screen, touch .

2 Select the job to cancel.

Note: You can also cancel a job by touching **Job Queue**.

Adjusting toner darkness

1 From the home screen, touch **Settings** > **Print** > **Quality** > **Toner Darkness**.

2 Adjust the setting.

Copy

Using the automatic document feeder and scanner glass

Automatic document feeder (ADF)	Scanner glass
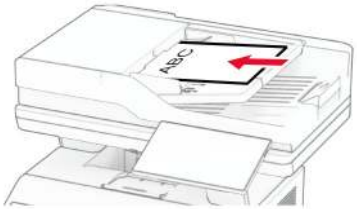 • Use the ADF for multiple-page or two-sided documents. • Load an original document faceup. For multiple-page documents, make sure to align the leading edge before loading. • Make sure to adjust the ADF guides to match the width of the paper that you are loading.	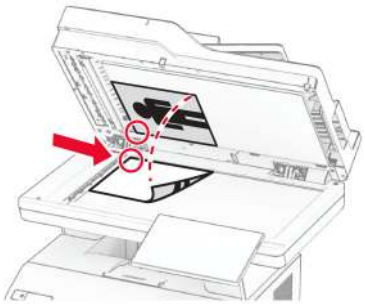 • Use the scanner glass for single-page documents, book pages, small items (such as postcards or photos), transparencies, photo paper, or thin media (such as magazine clippings). • Place the document facedown in the corner with the arrow.

Making copies

1 Load an original document into the ADF tray or on the scanner glass.

Note: To avoid a cropped image, make sure that the original document and output have the same paper size.

2 From the home screen, touch **Copy**, and then specify the number of copies.

If necessary, adjust the copy settings.

3 Copy the document.

Note: To make a quick copy, from the home screen, touch ▶.

Copying photos

1 Place a photo on the scanner glass.

2 From the home screen, touch **Copy** > **Settings** > **Content** > **Content Type** > **Photo**.

3 Touch **Content Source**, and then select the setting that best matches the original photo.

4 Copy the photo.

Copying on letterhead

1 Load an original document into the ADF tray or on the scanner glass.

2 From the home screen, touch **Copy** > **Copy From** > select the size of the original document.

3 Touch **Copy To**, and then select the paper source that contains the letterhead.

If you loaded the letterhead into the multipurpose feeder, then touch **Copy To** > **Multipurpose Feeder** > select a paper size > **Letterhead**.

4 Copy the document.

Copying on both sides of the paper

1 Load an original document into the ADF tray or on the scanner glass.

2 From the home screen, touch **Copy** > **Settings** > **Sides**.

3 Touch **1 sided to 2 sided** or **2 sided to 2 sided**.

4 Copy the document.

Reducing or enlarging copies

1 Load an original document into the ADF tray or on the scanner glass.

2 From the home screen, touch **Copy** > **Settings** > **Scale** > select a scale value.

Note: Changing the size of the original document or output after setting Scale restores the scale value to Auto.

3 Copy the document.

Collating copies

1 Load an original document into the ADF tray or on the scanner glass.

2 From the home screen, touch **Copy** > **Collate** > **On [1,2,1,2,1,2]**.

3 Copy the document.

Placing separator sheets between copies

1 Load an original document into the ADF tray or on the scanner glass.

2 From the control panel, navigate to:

Copy > **Settings** > **Separator Sheets** > adjust the settings

3 Copy the document.

Copying multiple pages onto a single sheet

1. Load an original document into the ADF tray or on the scanner glass.
2. From the home screen, touch **Copy** > **Settings** > **Pages per Side**.
3. Enable the setting, and then select the number per side and page orientation.
4. Copy the document.

Copying cards

1. Load a card on the scanner glass.
2. From the home screen, touch **Card Copy**.

   Note: If necessary, adjust the scan settings.
3. Touch **Scan**.

Note: If you want multiple copies of the card, then touch **Print a Copy**.

Creating a copy shortcut

1. From the home screen, touch **Copy**.
2. Configure the settings, and then touch ★.
3. Create a shortcut.

E-mail

Using the automatic document feeder and scanner glass

Automatic document feeder (ADF)	Scanner glass
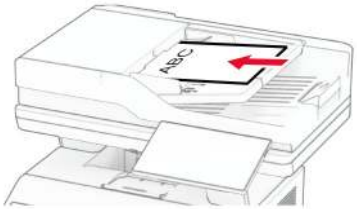 • Use the ADF for multiple-page or two-sided documents. • Load an original document faceup. For multiple-page documents, make sure to align the leading edge before loading. • Make sure to adjust the ADF guides to match the width of the paper that you are loading.	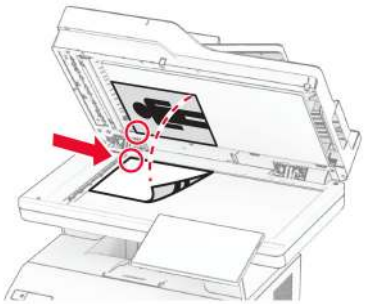 • Use the scanner glass for single-page documents, book pages, small items (such as postcards or photos), transparencies, photo paper, or thin media (such as magazine clippings). • Place the document facedown in the corner with the arrow.

Sending an e-mail

Before you begin, make sure that the SMTP settings are configured. For more information, see "Configuring the e-mail SMTP settings" on page 37.

1. Load an original document into the ADF tray or on the scanner glass.
2. From the home screen, touch **E-mail**, and then enter the needed information.
3. If necessary, configure the scan settings.
4. Send the e-mail.

Creating an e-mail shortcut

1. From the home screen, touch **E-mail**.
2. Configure the settings, and then touch ★.
3. Create a shortcut.

Fax

Using the automatic document feeder and scanner glass

Automatic document feeder (ADF)	Scanner glass
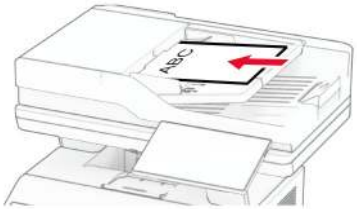 • Use the ADF for multiple-page or two-sided documents. • Load an original document faceup. For multiple-page documents, make sure to align the leading edge before loading. • Make sure to adjust the ADF guides to match the width of the paper that you are loading.	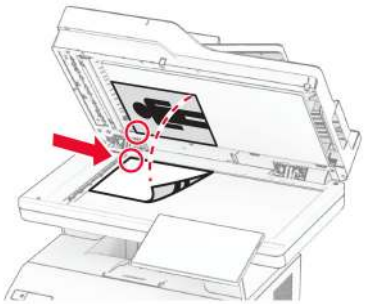 • Use the scanner glass for single-page documents, book pages, small items (such as postcards or photos), transparencies, photo paper, or thin media (such as magazine clippings). • Place the document facedown in the corner with the arrow.

Sending a fax

Note: Make sure that fax is configured. For more information, see the **Setting up the printer to fax** section.

Using the control panel

1. Load an original document into the ADF tray or on the scanner glass.
2. From the home screen, touch **Fax**, and then enter the needed information.

   If necessary, adjust the settings.
3. Send the fax.

Using the computer

Before you begin, make sure that the fax driver is installed. For more information, see "Installing the fax driver" on page 49.

For Windows users

1. From the document that you are trying to fax, open the Print dialog.
2. Select the printer, and then click **Properties**, **Preferences**, **Options**, or **Setup**.
3. Click **Fax** > **Enable fax** > **Always display settings prior to faxing**, and then enter the recipient number.

   If necessary, configure other fax settings.
4. Send the fax.

For Macintosh users

1. With a document open, choose **File** > **Print**.
2. Select the printer that has **- Fax** added after its name.
3. In the To field, enter the recipient number.
   If necessary, configure other fax settings.
4. Send the fax.

Scheduling a fax

Note: Make sure that fax is configured. For more information, see the **Setting up the printer to fax** section.

1. Load an original document into the ADF tray or on the scanner glass.
2. From the home screen, touch **Fax** > **To** > enter the fax number > **Done**.
3. Touch **Send Time**, configure the date and time, and then touch **Done**.
4. Send the fax.

Creating a fax destination shortcut

Note: Make sure that fax is configured. For more information, see the **Setting up the printer to fax** section.

1. From the home screen, touch **Fax** > **To**.
2. Enter the recipient number, and then touch **Done**.
3. Configure the settings, and then touch ★.
4. Create a shortcut.

Changing the fax resolution

Note: Make sure that fax is configured. For more information, see the **Setting up the printer to fax** section.

1. Load an original document into the ADF tray or on the scanner glass.
2. From the home screen, touch **Fax**, and then enter the needed information.
3. Touch **Settings** > **Resolution** > select a setting.
4. Send the fax.

Adjusting the fax darkness

Note: Make sure that fax is configured. For more information, see the **Setting up the printer to fax** section.

1. Load an original document into the ADF tray or on the scanner glass.
2. From the home screen, touch **Fax**, and then enter the needed information.

3 Touch **Settings** > **Darkness** > adjust the setting.

4 Send the fax.

Printing a fax log

Note: Make sure that analog fax or etherFAX is configured. For more information, see the **Setting up the printer to fax** section.

1 From the home screen, touch **Settings** > **Reports** > **Fax**.

2 Touch **Fax Job Log** or **Fax Call Log**.

Blocking junk faxes

Note: Make sure that analog fax or etherFAX is configured. For more information, see the **Setting up the printer to fax** section.

1 From the home screen, touch **Settings** > **Fax** > **Fax Setup** > **Fax Receive Settings** > **Admin Controls**.

2 Set Block No Name Fax to **On**.

Holding faxes

Note: Make sure that analog fax or etherFAX is configured. For more information, see the **Setting up the printer to fax** section.

1 From the home screen, touch **Settings** > **Fax** > **Fax Setup** > **Fax Receive Settings** > **Holding Faxes**.

2 Select a mode.

Forwarding a fax

Note: Make sure that analog fax or etherFAX is configured. For more information, see the **Setting up the printer to fax** section.

1 Create a destination shortcut.

   a Open a web browser, and then type the printer IP address in the address field.

   Notes:

   - View the printer IP address on the home screen. The IP address appears as four sets of numbers separated by periods, such as 123.123.123.123.
   - If you are using a proxy server, then temporarily disable it to load the web page correctly.

   b Click **Shortcuts** > **Add Shortcut**.

   c Select a shortcut type, and then configure the settings.

   Note: Take note of the shortcut number.

   d Apply the changes.

2 Click **Settings** > **Fax** > **Fax Setup** > **Fax Receive Settings** > **Admin Controls**.

3 In the Fax Forwarding menu, select **Forward** or **Print and Forward**.

4 In the Forward to menu, select the destination type and then type the shortcut number.

5 Apply the changes.

Scan

Using the automatic document feeder and scanner glass

Automatic document feeder (ADF)	Scanner glass
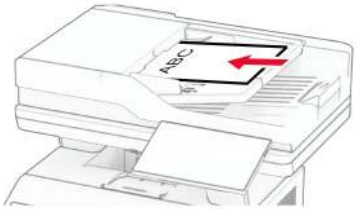 • Use the ADF for multiple-page or two-sided documents. • Load an original document faceup. For multiple-page documents, make sure to align the leading edge before loading. • Make sure to adjust the ADF guides to match the width of the paper that you are loading.	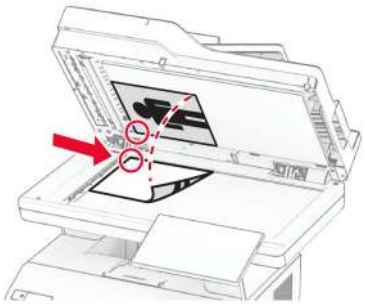 • Use the scanner glass for single-page documents, book pages, small items (such as postcards or photos), transparencies, photo paper, or thin media (such as magazine clippings). • Place the document facedown in the corner with the arrow.

Scanning to a computer

Before you begin, make sure that the computer and the printer are connected to the same network.

For Windows users

Using Lexmark ScanBack Utility

1. From the computer, run Lexmark ScanBack Utility, and then click **Next**.

   Note: To download the utility, go to **www.lexmark.com/downloads**.

2. Click **Setup**, and then add the printer IP address.

   Note: View the printer IP address on the printer home screen. The IP address appears as four sets of numbers separated by periods, such as 123.123.123.123.

3. Click **Close** > **Next**.
4. Select the size of the original document, and then click **Next**.
5. Select a file format and scan resolution, and then click **Next**.
6. Type a unique scan profile name, and then click **Next**.
7. Browse to the location that you want to save the scanned document, create a file name, and then click **Next**.

   Note: To reuse the scan profile, enable **Create Shortcut**, and then create a unique shortcut name.

8. Click **Finish**.

9 Load an original document into the automatic document feeder or on the scanner glass.

10 From the printer home screen, touch **Scan Profiles** > **Scan to Computer**, and then select a scan profile.

Using Windows Fax and Scan

Note: Make sure that the printer is added to the computer. For more information, see "Adding printers to a computer" on page 49.

1 Load an original document into the automatic document feeder or on the scanner glass.

2 From the computer, open **Windows Fax and Scan**.

3 Click **New Scan**, and then select a scanner source.

4 If necessary, change the scan settings.

5 Scan the document.

6 Click **Save as**, type a file name, and then click **Save**.

For Macintosh users

Note: Make sure that the printer is added to the computer. For more information, see "Adding printers to a computer" on page 49.

1 Load an original document into the automatic document feeder or on the scanner glass.

2 From the computer, do either of the following:
- Open **Image Capture**.
- Open **Printers & Scanners**, and then select a printer. Click **Scan** > **Open Scanner**.

3 From the Scanner window, do one or more of the following:
- Select the location that you want to save the scanned document.
- Select the size of the original document.
- To scan from the ADF, select **Document Feeder** from the Scan Menu or enable **Use Document Feeder**.
- If necessary, configure the scan settings.

4 Click **Scan**.

Scanning to an FTP server

1 Load the original document into the ADF tray or on the scanner glass.

2 From the home screen, touch **FTP**, and then enter the needed information.

3 If necessary, configure other FTP settings.

4 Send the FTP job.

Creating an FTP shortcut

1 From the home screen, touch **FTP**.

2 Enter the FTP server address, and then touch ★.

3 Create a shortcut.

Scanning to a network folder

1 Load the document into the ADF tray or on the scanner glass.

2 From the home screen, touch **Scan Center**.

Note: The icon and name may have been changed. For more information, contact your administrator.

3 Do either of the following:

- Select a destination.

  Note: For SFTP, set the port number to **22**.

- Use a shortcut by touching ★, and then selecting the shortcut from the list.

4 Scan the document.

Creating a network folder shortcut

1 Open a web browser, and then type the printer IP address in the address field.

Notes:

- View the printer IP address on the printer home screen. The IP address appears as four sets of numbers separated by periods, such as 123.123.123.123.
- If you are using a proxy server, then temporarily disable it to load the web page correctly.

2 Click **Shortcuts** > **Add Shortcut**.

3 From the Shortcut Type menu, select **Network Folder**, and then configure the settings.

4 Apply the changes.

Scanning to a flash drive

1 Load an original document into the ADF tray or on the scanner glass.

2 Insert the flash drive.

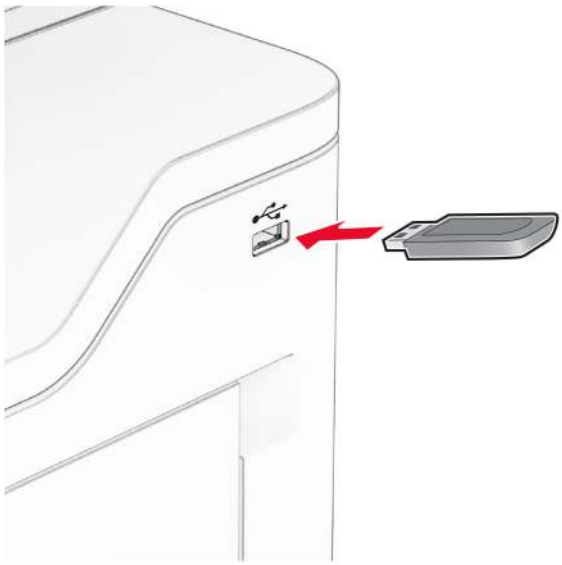

3 Touch **Scan to USB** and adjust the settings if necessary.

Notes:

- To save the scanned document to a folder, touch **Scan to**, select a folder, and then touch **Scan Here**.
- If the USB Drive screen does not appear, then touch **USB Drive** on the control panel.

4 Scan the document.

Warning—Potential Damage: To avoid loss of data or printer malfunction, do not touch the flash drive or the printer in the area shown while actively printing, reading, or writing from the memory device.

Use printer menus

Menu map

Device	• Preferences • Eco-Mode • Remote Operator Panel • Notifications • Power Management • Anonymous Data Collection	• Accessibility • Restore Factory Defaults • Maintenance • Home Screen Customization[1] • Update Firmware • About this Printer
Print	• Layout • Setup • Quality • Job Accounting	• PDF • PostScript • PCL • Image
Paper	• Tray Configuration	• Media Configuration
Copy	Copy Defaults	
Fax	Fax Defaults	
E-mail	• E-mail Setup • E-mail Defaults	• Web Link Setup
FTP	FTP Defaults	
USB Drive	• Flash Drive Scan	• Flash Drive Print
Network/Ports	• Network Overview • Wireless • Wi-Fi Direct • AirPrint • Mobile Services Management • Ethernet • TCP/IP • SNMP	• IPSec • 802.1x • LPD Configuration • HTTP/FTP Settings • ThinPrint • USB • Restrict external network access
Security	• Login Methods • Schedule USB Devices • Security Audit Log • Login Restrictions • Confidential Print Setup	• Disk Encryption • Erase Temporary Data Files • Solutions LDAP Settings • Miscellaneous
Cloud Services	Cloud Services Enrollment	

[1] Appears only in the Embedded Web Server.

[2] Appears only when a hard disk or an intelligent storage drive is installed.

Reports	• **Menu Settings Page** • **Device** • **Print**	• **Shortcuts** • **Fax** • **Network**
Troubleshooting	Print Quality Test Pages	Cleaning the Scanner
Forms Merge[2]	**Forms Merge**	
[1] Appears only in the Embedded Web Server. [2] Appears only when a hard disk or an intelligent storage drive is installed.		

Device

Preferences

Menu item	Description
Display Language [List of languages]	Set the language of the text that appears on the display.
Country/Region [List of countries or regions]	Identify the country or region where the printer is configured to operate.
Run initial setup Off* On	Run the setup wizard.
Keyboard Keyboard Type [List of languages]	Select a language as a keyboard type. **Note:** All the Keyboard Type values may not appear or may require special hardware to appear.
Displayed information Display Text 1 (IP Address*) Display Text 2 (Date/Time*) Custom Text 1 Custom Text 2	Specify the information to appear on the home screen.
Note: An asterisk (*) next to a value indicates the factory default setting.	

Menu item	Description
Date and Time Configure Current Date and Time Manually Set Date and Time Date Format (MM-DD-YYYY*) Time Format (12 hour A.M./P.M.*) Time Zone UTC (GMT) Offset DST Start DST End DST Offset Network Time Protocol Enable NTP (On*) NTP Server Enable Authentication (None*) Key ID Password	Configure the printer date and time and network time protocol. **Notes:** • MM-DD-YYYY is the U.S. factory default setting. DD-MM-YYYY is the international factory default setting. • UTC (GMT) Offset, DST Start, DST End, and DST Offset appear only when Time Zone is set to (UTC+user) Custom. • Key ID and Password appear only when Enable Authentication is set to MD5 key.
Paper Sizes U.S.* Metric	Specify the unit of measurement for paper sizes. **Note:** The country or region selected in the initial setup wizard determines the initial paper size setting.
Screen Brightness 20–100% (100*)	Adjust the brightness of the display.
Flash Drive Access Disabled Enabled*	Enable access to the flash drive.
Allow Background Removal Off On*	Specify whether background removal is allowed.
Allow Custom Job scans Off On*	Specify whether the Custom Job Scanning setting appears for copy, scan, and fax. **Note:** This menu item appears only when a hard disk or an intelligent storage drive is installed.
One Page Flatbed Scanning Off* On	Set the printer to scan any type of job involving the scanner glass as a single page. **Note:** The printer returns to the home screen after performing a single flatbed scan instead of displaying prompts.
Note: An asterisk (*) next to a value indicates the factory default setting.	

Menu item	Description
Device Sounds Mute All Sounds (Off*) Button Feedback (On*) Volume (5*) ADF Loaded Beep (On*) Alarm Control (Single*) Cartridge Alarm (Off*) Speaker Mode (Always Off*) Ringer Volume (Off*)	Configure the sound settings of the printer.
Screen Timeout 5–300 seconds (60*)	Set the idle time in seconds before the display shows the home screen, or before the printer logs out a user account automatically.
Note: An asterisk (*) next to a value indicates the factory default setting.	

Eco-Mode

Menu item	Description
Print Sides 1-Sided* 2-Sided	Specify whether to print on one side or two sides of the paper.
Print Pages per Side Off* 2 pages per side 3 pages per side 4 pages per side 6 pages per side 9 pages per side 12 pages per side 16 pages per side	Print multiple page images on one side of a sheet of paper.
Print Toner Darkness 1–10 (8*)	Determine the lightness or darkness of text images.
Copy Sides 1 sided to 1 sided* 1 sided to 2 sided 2 sided to 1 sided 2 sided to 2 sided	Specify the scanning behavior based on the original document.
Note: An asterisk (*) next to a value indicates the factory default setting.	

Menu item	Description
Copy Pages per Side Off* 2 Portrait pages 4 Portrait pages 2 Landscape pages 4 Landscape pages	Specify the scanning behavior based on the original document.
Copy Darkness 1–9 (5*)	Determine the darkness of the scanned text images.
Note: An asterisk (*) next to a value indicates the factory default setting.	

Remote Operator Panel

Menu item	Description
External VNC Connection Don't Allow* Allow	Connect an external Virtual Network Computing (VNC) client to the remote control panel.
Authentication Type None* Standard Authentication	Set the authentication type when accessing the VNC client server.
VNC Password	Specify the password to connect to the VNC client server. **Note:** This menu item appears only if Authentication Type is set to Standard Authentication.
Note: An asterisk (*) next to a value indicates the factory default setting.	

Notifications

Menu item	Description
ADF Loaded Beep Off On*	Enable a sound when loading paper into the ADF.
Alarm Control Off Single* Continuous	Set the number of times that the alarm sounds when the printer requires user intervention.
Supplies Show Supply Estimates Show estimates* Do not show estimates	Show the estimated status of the supplies.
Note: An asterisk (*) next to a value indicates the factory default setting.	

Menu item	Description
Supplies Cartridge Alarm Off* Single Continuous	Set the number of times that the alarm sounds when the toner cartridge is low.
Supplies Custom Supply Notifications	Configure notification settings when the printer requires user intervention. **Note:** This menu item appears only in the Embedded Web Server.
E-mail Alerts Setup Primary SMTP Gateway Primary SMTP Gateway Port (25*) Secondary SMTP Gateway Secondary SMTP Gateway Port (25*) SMTP Timeout (30 seconds*) Reply Address Always use SMTP default Reply Address (Off*) Use SSL/TLS (Disabled*) Require Trusted Certificate (On*) SMTP Server Authentication (No authentication required*) Device-Initiated E-mail (None*) User-Initiated E-mail (None*) Use Active Directory Device Credentials (Off*) Device Userid Device Password Kerberos 5 REALM NTLM Domain Disable “SMTP server not set up” error (Off*)	Configure the printer to send e-mail alerts to a list of contacts when the printer requires user intervention.
E-mail Alerts Setup Setup E-mail Lists and Alerts E-mail List 1 E-mail List 2 Subject Text E-mail Events	Specify the e-mail addresses and enable the e-mail alert events. **Note:** This menu item appears only in the Embedded Web Server.
Error Prevention Jam Assist Off On*	Set the printer to flush automatically blank pages or pages with partial prints after a jammed page is cleared.
Note: An asterisk (*) next to a value indicates the factory default setting.	

Menu item	Description
Error Prevention Auto Continue Enabled 5–255 (5*)	Let the printer to continue processing or printing a job automatically after clearing certain attendance conditions.
Error Prevention Auto Reboot Auto Reboot Reboot when idle Reboot always* Reboot never	Set the printer to restart when an error occurs.
Error Prevention Auto Reboot Max Auto Reboots 1–20 (2*)	Set the number of automatic reboots that the printer can perform.
Error Prevention Auto Reboot Auto Reboot Window 1–525600 (720*)	Set the number of seconds before the printer performs an automatic reboot.
Error Prevention Auto Reboot Auto Reboot Counter	Show a read-only information of the reboot counter.
Error Prevention Auto Reboot Reset Auto Reboot Counter Cancel Continue	Reset the values of the Auto Reboot Counter.
Error Prevention Display Short Paper Error On Auto-clear*	Set the printer to show a message when a short paper error occurs. **Note:** Short paper refers to the size of the paper loaded.
Error Prevention Page Protect Off* On	Set the printer to process the entire page into the memory before printing it.
Jam Content Recovery Jam Recovery Off On Auto*	Set the printer to reprint jammed pages.
Note: An asterisk (*) next to a value indicates the factory default setting.	

Menu item	Description
Jam Content Recovery Scanner Jam Recovery Job level Page level*	Specify how to restart a scan job after resolving a paper jam.
Note: An asterisk (*) next to a value indicates the factory default setting.	

Power Management

Menu item	Description
Sleep Mode Profile Print from Sleep Mode Stay awake after printing Enter Sleep Mode after printing*	Set the printer to stay awake or enter Sleep mode after printing.
Sleep Mode Profile Touch to Wake from Deep Sleep Off On*	Wake the printer from Deep Sleep mode by touching the printer display.
Timeouts Sleep Mode 1–114 minutes (15*)	Set the idle time before the printer begins operating in Sleep mode.
Timeouts Hibernate Timeout Disabled 1 hour 2 hours 3 hours 6 hours 1 day 2 days 3 days* 1 week 2 weeks 1 month	Set the time before the printer turns off.
Timeouts Hibernate Timeout on Connection Hibernate Do Not Hibernate*	Set Hibernate Timeout to turn off the printer while an active Ethernet connection exists.
Schedule Power Modes Schedules Add New Schedule	Schedule the printer when to enter Sleep or Hibernate mode.
Note: An asterisk (*) next to a value indicates the factory default setting.	

Anonymous Data Collection

Menu item	Description
Anonymous Data Collection Device Usage and Performance Information None*	Send printer usage and performance information to Lexmark. **Note:** Anonymous Data Send Time appears only when you set Anonymous Data Collection to Device Usage and Performance Information.
Anonymous Data Send Time Start Time Stop Time	
Note: An asterisk (*) next to a value indicates the factory default setting.	

Accessibility

Menu item	Description
Duplicate Key Strike Interval 0–5 (0*)	Set the interval in seconds during which the printer ignores duplicate key presses on an attached keyboard.
Key Repeat Initial Delay 0.25–5 (1*)	Set the initial length of delay in seconds before a repeating key starts repeating.
Key Repeat Rate 0.5–30 (30*)	Set the number of presses per second for a repeating key.
Prolong Screen Timeout Off* On	Let the user remain in the same location and reset the Screen Timeout timer when it expires instead of returning to the home screen.
Headphone Volume 1–10 (5*)	Adjust the headphone volume.
Enable Voice Guidance When Headphone Is Attached Off* On	Enable Voice Guidance when a headphone is attached to the printer.
Speak Passwords/PINs Off* On	Set the printer to read out loud passwords or personal identification numbers.
Note: An asterisk (*) next to a value indicates the factory default setting.	

Menu item	Description
Speech Rate Very Slow Slow Normal* Fast Faster Very Fast Rapid Very Rapid Fastest	Set the Voice Guidance speech rate.
Note: An asterisk (*) next to a value indicates the factory default setting.	

Restore Factory Defaults

Menu item	Description
Restore Settings Restore all settings Restore printer settings Restore network settings Restore fax settings Restore app settings	Restore the printer factory default settings.

Maintenance

Configuration Menu

Configuration Menu

Menu item	Description
USB Configuration USB PnP 1* 2	Change the USB driver mode of the printer to improve its compatibility with a personal computer.
USB Configuration USB Scan to Local On* Off	Set whether the USB device driver enumerates as a USB Simple device (single interface) or as a USB Composite device (multiple interfaces).
USB Configuration USB Speed Full Auto*	Set the USB port to run at full speed and disable its high-speed capabilities.
Note: An asterisk (*) next to a value indicates the factory default setting.	

Menu item	Description
Tray Configuration Tray Linking Automatic* Off	Set the printer to link the trays that have the same paper type and paper size settings.
Tray Configuration Show Tray Insert Message Off Only for unknown sizes* Always	Display a message that lets the user change the paper size and paper type settings after inserting the tray.
Tray Configuration A5 Loading Short Edge* Long Edge	Determine the default loading orientation for the A5 size paper in all paper sources.
Tray Configuration Paper Prompts Auto* Multipurpose Feeder Manual Paper	Set the paper source that the user fills when a prompt to load paper appears. **Note:** For Multipurpose Feeder to appear, in the Paper menu, set Configure MP to Cassette.
Tray Configuration Envelope Prompts Auto* Multipurpose Feeder Manual Envelope	Set the paper source that the user fills when a prompt to load envelope appears. **Note:** For Multipurpose Feeder to appear, in the Paper menu, set Configure MP to Cassette.
Tray Configuration Action for Prompts Prompt user* Continue Use current	Set the printer to resolve paper- or envelope-related change prompts.
Tray Configuration Multiple Universal Sizes Off* On	Set the tray to support multiple universal paper sizes.
Reports Menu Settings Page Event Log Event Log Summary	Print reports about printer menu settings, status, and event logs.
Supply Usage And Counters Clear Supply Usage History	Reset the supply usage history, such as number of pages and days remaining, to the factory shipped level.
Supply Usage And Counters Reset Maintenance Counter	Reset the counter after installing a new maintenance kit.
Note: An asterisk (*) next to a value indicates the factory default setting.	

Menu item	Description
Printer Emulations PPDS Emulation Off* On	Set the printer to recognize and use the PPDS data stream.
Printer Emulations PS Emulation Off On*	Set the printer to recognize and use the PS data stream.
Printer Emulations Use Native ISD Fonts Off* On	Let the printer use the native or free fonts in the intelligent storage drive (ISD) for printing.
Printer Emulations Enable Formsmerge Off On*	Activate Forms Merge to store the forms into the hard disk or ISD. **Notes:** • The Forms Merge license must be installed. • This menu item appears only when a hard disk or an ISD is installed.
Printer Emulations Enable Prescribe Off* On	Activate Prescribe. **Note:** The Prescribe license must be installed.
Printer Emulations Emulator Security Page Timeout 0–60 (60*)	Set the page time-out during emulation.
Printer Emulations Emulator Security Reset Emulator After Job Off* On	Reset the emulator after a print job.
Printer Emulations Emulator Security Disable Printer Message Access Off On*	Disable access to printer message during emulation.
Fax Configuration Fax Low Power Support Disable Sleep Permit Sleep Auto*	Set fax to enter Sleep mode whenever the printer determines that it must.
Note: An asterisk (*) next to a value indicates the factory default setting.	

Menu item	Description
Fax Configuration Fax Storage Location NAND Disk*	Set the storage location for all faxes. **Note:** This menu item appears only when an ISD is installed.
Print Configuration Font Sharpening 0–150 (24*)	Set a text point-size value below which the high-frequency screens are used when printing font data. For example, if the value is 24, then all fonts sized 24 points or less use the high-frequency screens.
Print Configuration Print Density Disabled 1–5 (3*)	Adjust the toner density when printing documents.
Print Configuration Copy Density Disabled 1–5 (3*)	Adjust the toner density when copying documents.
Device Operations Quiet Mode Off* On	Set the printer to operate in Quiet Mode. **Note:** Enabling this setting slows down the overall performance of the printer.
Device Operations Safe Mode Off* On	Set the printer to operate in a special mode, in which it attempts to continue offering as much functionality as possible, despite known issues. For example, when set to On, and the duplex motor is nonfunctional, the printer performs one-sided printing of the documents even if the job is two-sided printing.
Device Operations Minimum Copy Memory 20 MB* 30 MB 50 MB 80 MB 100 MB	Set the minimum memory allocation for storing copy jobs.
Device Operations Clear Custom Status	Erase user-defined strings for the Default or Alternate custom messages.
Device Operations Clear all remotely-installed messages	Erase messages that were remotely installed.
Device Operations Automatically Display Error Screens Off On*	Show existing error messages on the display after the printer remains inactive on the home screen for a length of time.
Note: An asterisk (*) next to a value indicates the factory default setting.	

Menu item	Description
Device Operations Honor orientation on fast path copy Off* On	Enable the printer to use the orientation setting under the Copy menu when sending quick copy jobs.
App Configuration LES Applications Off On*	Enable Lexmark Embedded Solutions (LES) applications.
Scanner Configuration Scanner Manual Registration Print Quick Test	Print a Quick Test target page. **Note:** Make sure that the margin spacing on the target page is uniform all the way around the target. If it is not, then the printer margins must be reset.
Scanner Configuration Scanner Manual Registration Front ADF Registration Rear ADF Registration Flatbed Registration	Manually register the flatbed and ADF after replacing the ADF, scanner glass, or controller board.
Scanner Configuration Reset Maintenance Counter	Reset the counter after replacing the ADF maintenance kit.
Scanner Configuration Edge Erase Flatbed Edge Erase (3*) ADF Edge Erase (3*)	Set the size, in millimeters, of the no-print area around an ADF or flatbed scan job.
Scanner Configuration Disable Scanner No* Yes ADF Only	Disable the scanner when it is not working properly.
Scanner Configuration Tiff Byte Order CPU Endianness* Little Endian Big Endian	Set the byte order of a TIFF-formatted scan output.
Scanner Configuration Exact Tiff Rows Per Strip On* Off	Set the RowsPerStrip tag value of a TIFF-formatted scan output.
Note: An asterisk (*) next to a value indicates the factory default setting.	

Out of Service Erase

Menu item	Description
Out of Service Erase Memory Last Sanitized Hard Disk Last Sanitized ISD last erased	Show a read-only information on when the printer memory or storage drive was last erased. **Note:** Hard Disk Last Sanitized and ISD last erased appear only when a storage drive is installed.
Out of Service Erase Sanitize all information on nonvolatile memory Erase all printer and network settings Erase all apps and app settings Erase all shortcuts and shortcut settings Sanitize all information on hard disk Erase downloads (Erase all macros, fonts, PFOs, etc.) Erase buffered jobs Erase Held jobs Erase Intelligent Storage Drive	Clear all information on nonvolatile memory and on the storage drive. **Note:** Sanitize all information on hard disk and Erase Intelligent Storage Drive appear only when a storage drive is installed.

Home Screen Customization

Note: This menu appears only in the Embedded Web Server.

Menu	Description
Copy E-mail Fax Held Faxes Release Held Faxes Status/Supplies Job Queue Settings Change Language Address Book Bookmarks Held Jobs USB Drive FTP Scan Profiles Lock Device Scan Center Card Copy Shortcut Center	Specify which icons to show on the home screen.

Update firmware

Menu item	Description
Current Version	Show the current firmware version installed on the printer.
Check for updates now	Check for firmware updates.
Auto check for updates	Set the printer to check for firmware updates automatically.

About this Printer

Menu item	Description
Asset Tag	Specify the identity of the printer. The maximum length is 32 characters.
Printer's Location	Specify the printer location. The maximum length is 63 characters.
Contact	Specify the contact information for the printer. The maximum length is 63 characters.
Firmware Version	Show the firmware version installed on the printer.
Engine	Show the engine number of the printer.
Serial Number	Show the serial number of the printer.
Export Configuration File to USB	Export the configuration file to a flash drive.
Export Compressed Logs to USB	Export the compressed log files to a flash drive.
Send Logs	Send printer log information to Lexmark.

Print

Layout

Menu item	Description
Sides 1-Sided* 2-Sided	Specify whether to print on one side or both sides of the paper.
Flip Style Long Edge* Short Edge	Determine which side of the paper is bound when performing two-sided printing.
Blank Pages Print Do Not Print*	Print blank pages that are included in a print job.
Note: An asterisk (*) next to a value indicates the factory default setting.	

Menu item	Description
Collate Off (1,1,1,2,2,2) On (1,2,1,2,1,2)*	Keep the pages of a print job stacked in sequence, particularly when printing multiple copies of the job.
Separator Sheets None* Between Copies Between Jobs Between Pages	Insert blank separator sheets when printing.
Separator Sheet Source Tray [x] (1*) Multipurpose Feeder	Specify the paper source for the separator sheet.
Pages per Side Off* 2 pages per side 3 pages per side 4 pages per side 6 pages per side 9 pages per side 12 pages per side 16 pages per side	Print multiple page images on one side of a sheet of paper.
Pages per Side Ordering Horizontal* Reverse Horizontal Vertical Reverse Vertical	Specify the positioning of multiple page images when using the Pages per Side menu.
Pages per Side Orientation Auto* Landscape Portrait	Specify the orientation of multiple page images when using the Pages per Side menu.
Pages per Side Border None* Solid	Print a border around each page image when using the Pages per Side menu.
Copies 1–9999 (1*)	Specify the number of copies for each print job.
Print Area Normal* Whole Page	Set the printable area on a sheet of paper.
Note: An asterisk (*) next to a value indicates the factory default setting.	

Setup

Menu item	Description
Printer Language PCL Emulation* PS Emulation	Set the printer language. **Note:** Setting a printer language default does not prevent a software program from sending print jobs that use another printer language.
Job Waiting Off* On	Preserve print jobs requiring supplies so that jobs not requiring the missing supplies can print. **Note:** This menu item appears only when a hard disk or an intelligent storage drive (ISD) is installed.
Job Hold Timeout 0–255 (30*)	Set the time in seconds that the printer waits for user intervention before it holds jobs that require unavailable resources. **Note:** This menu item appears only when a hard disk or an ISD is installed.
Download Target RAM* Disk	Specify where to save all permanent resources that have been downloaded to the printer. **Note:** This menu item appears only when a hard disk or an ISD is installed.
Resource Save Off* On	Determine what the printer does with downloaded resources when it receives a job that requires more than the available memory. **Notes:** • When set to Off, the printer retains downloaded resources only until memory is needed. Resources associated with the inactive printer language are deleted. • When set to On, the printer preserves all the permanent downloaded resources across all language switches. When necessary, the printer shows memory full messages instead of deleting permanent resources.
Print All Order Alphabetical* Newest First Oldest First	Specify the order when you choose to print all held and confidential jobs.
Note: An asterisk (*) next to a value indicates the factory default setting.	

Quality

Menu item	Description
Print Resolution 600 dpi 1200 Image Q* 2400 Image Q 1200 dpi 300 dpi	Set the resolution for the printed output.
Note: An asterisk (*) next to a value indicates the factory default setting.	

Menu item	Description
Pixel Boost Off* Fonts* Horizontally Vertically Both directions	Enable more pixels to print in clusters for clarity, to enhance images horizontally or vertically or to enhance fonts.
Toner Darkness 1 to 10 (8*)	Determine the lightness or darkness of text images.
Halftone Normal* Detail	Enhance the printed output to have smoother lines with sharper edges.
Brightness -6 to 6 (0*)	Adjust the printed output either by lightening or darkening it.
Contrast 0 to 5 (0*)	Adjust the contrast of printed objects.
Gray Correction Off Auto*	Enable the gray correction algorithm of the printer on printed images in mid-gray level.
Note: An asterisk (*) next to a value indicates the factory default setting.	

Job Accounting

Menu item	Description
Job Accounting Off* On	Set the printer to create a log of the print jobs that it receives.
Accounting Log Frequency Daily Weekly Monthly*	Specify how often the printer creates a log file.
Log Action at End of Frequency None* E-mail Current Log E-mail & Delete Current Log Post Current Log Post & Delete Current Log	Specify how the printer responds when the frequency threshold expires. **Note:** The value defined in Accounting Log Frequency determines when this action is triggered.
Log Near Full Level Off On* (5)	Specify the maximum size of the log file before the printer executes Log Action at Near Full. **Note:** This menu item appears only when a hard disk or an ISD is installed.
Note: An asterisk (*) next to a value indicates the factory default setting.	

Menu item	Description
Log Action at Near Full None* E-mail Current Log E-mail & Delete Current Log E-mail & Delete Oldest Log Post Current Log Post & Delete Current Log Post & Delete Oldest Log Delete Current Log Delete Oldest Log Delete All But Current Delete All Logs	Specify how the printer responds when the hard disk or ISD is nearly full. **Note:** The value defined in Log Near Full Level determines when this action is triggered.
Log Action at Full None* E-mail & Delete Current Log E-mail & Delete Oldest Log Post & Delete Current Log Post & Delete Oldest Log Delete Current Log Delete Oldest Log Delete All But Current Delete All Logs	Specify how the printer responds when hard disk or ISD usage reaches the maximum limit (100MB).
URL to Post Log	Specify where the printer posts job accounting logs.
E-mail Address to Send Logs	Specify the email address to which the printer sends job accounting logs.
Log File Prefix	Specify the prefix for the log files. **Note:** The current host name defined in the TCP/IP menu is used as the default log file prefix.
Note: An asterisk (*) next to a value indicates the factory default setting.	

PDF

Menu item	Description
Scale To Fit Off* On	Scale the page content to fit the selected paper size.
Annotations Print Do Not Print*	Specify whether to print annotations in the PDF.
Print PDF Error Off On*	Enable the printing of PDF error.
Note: An asterisk (*) next to a value indicates the factory default setting.	

PostScript

Menu item	Description
Print PS Error Off* On	Print a page that describes the PostScript® error. **Note:** When an error occurs, processing of the job stops, the printer prints an error message, and the rest of the print job is flushed.
Minimum Line Width 1–30 (2*)	Set the minimum stroke width. **Note:** Jobs printed in 1200 dpi use the value directly.
Lock PS Startup Mode Off On*	Disable the SysStart file. **Note:** Enabling the SysStart file exposes your printer or network to a security risk.
Font Priority Resident* Flash/Disk	Establish the font search order. **Notes:** • Resident sets the printer to search its memory for the requested font before searching the hard disk or intelligent storage drive (ISD). • Flash/Disk sets the printer to search the hard disk or ISD for the requested font before searching the printer memory. • This menu item appears only when a hard disk or an ISD is installed.
Wait Timeout Off On* (40 seconds)	Enable the printer to wait for more data before canceling a print job.
Note: An asterisk (*) next to a value indicates the factory default setting.	

PCL

Menu item	Description
Font Source Resident* Disk Download Flash Font Card All	Select the source which contains the default font selection. **Notes:** • Disk and Flash appear only when a hard disk or an intelligent storage drive (ISD) that contains fonts is installed. • Download appears only if downloaded fonts exist in the printer memory. • Font Card appears only when an ISD is installed.
Font Name [List of available fonts] (Courier*)	Select a font from the specified font source.
Symbol Set [List of available symbol set] (10U PC-8*)	Specify the symbol set for each font name. **Note:** A symbol set is a set of alphabetic and numeric characters, punctuation, and special symbols. Symbol sets support the different languages or specific programs such as math symbols for scientific text.
Note: An asterisk (*) next to a value indicates the factory default setting.	

Menu item	Description
Pitch 0.08–100.00 (10.00*)	Specify the pitch for fixed or monospaced fonts. **Note:** Pitch refers to the number of fixed-space characters in a horizontal inch of type.
Orientation Portrait* Landscape Reverse Portrait Reverse Landscape	Specify the orientation of text and graphics on the page.
Lines per Page 1–255	Specify the number of lines of text for each page printed through the PCL® data stream. **Notes:** • This menu item activates vertical escapement that causes the selected number of requested lines to print between the default margins of the page. • 60 is the U.S. factory default setting. 64 is the international factory default setting.
PCL5 Minimum Line Width 1–30 (2*)	Set the initial minimum stroke width.
PCLXL Minimum Line Width 1–30 (2*)	
A4 Width 198 mm* 203 mm	Set the width of the logical page on A4-size paper. **Note:** Logical page is the space on the physical page where data is printed.
Auto CR after LF On Off*	Set the printer to perform a carriage return after a line feed control command. **Note:** Carriage return is a mechanism that commands the printer to move the position of the cursor to the first position on the same line.
Auto LF after CR On Off*	Set the printer to perform a line feed after a carriage return control command.
Tray Renumber Assign MP Feeder Assign Tray [x] Assign Manual Paper Assign Manual Envelope	Configure the printer to work with a different print driver or custom application that uses a different set of source assignments to request a given paper source. Choose from the following options: Off*—The printer uses the factory default paper source assignments. None—The paper source ignores the Select Paper Feed command. 0–199—Select a numeric value to assign a custom value to a paper source.
Tray Renumber View Factory Defaults	Show the factory default value assigned for each paper source.
Note: An asterisk (*) next to a value indicates the factory default setting.	

Menu item	Description
Tray Renumber Restore Defaults	Restore the tray renumber values to their factory defaults.
Print Timeout Off On* (90 seconds)	Set the printer to end a print job after it has been idle for the specified amount of time. **Note:** Print Timeout Time appears only when Print Timeout is enabled.
Note: An asterisk (*) next to a value indicates the factory default setting.	

Image

Menu item	Description
Auto Fit On Off*	Select the best available paper size and orientation setting for an image. **Note:** When set to On, this menu item overrides the scaling and orientation settings for the image.
Invert Off* On	Invert bitonal monochrome images. **Note:** This menu item does not apply to GIF or JPEG image formats.
Scaling Anchor Top Left Best Fit* Anchor Center Fit Height/Width Fit Height Fit Width	Adjust the image to fit the printable area. **Note:** When Auto Fit is set to On, Scaling is automatically set to Best Fit.
Orientation Portrait* Landscape Reverse Portrait Reverse Landscape	Specify the orientation of text and graphics on the page.
Note: An asterisk (*) next to a value indicates the factory default setting.	

Paper

Tray Configuration

Menu item	Description
Default Source Tray [x] (1*) Multipurpose Feeder Manual Paper Manual Envelope	Set the paper source for all print jobs.
Paper Size/Type Tray [x] Multipurpose Feeder Manual Paper Manual Envelope	Specify the paper size or paper type loaded in each paper source.
Substitute Size Off Letter/A4 All Listed*	Set the printer to substitute a specified paper size if the requested size is not loaded in any paper source. **Notes:** • Off prompts the user to load the required paper size. • All Listed allows all available substitutions.
Configure MP Cassette* Manual First	Determine the behavior of the multipurpose feeder. **Notes:** • Cassette configures the multipurpose feeder as the automatic paper source. • Manual sets the multipurpose feeder only for manual-feed print jobs. • First configures the multipurpose feeder as the primary paper source.
Note: An asterisk (*) next to a value indicates the factory default setting.	

Media Configuration

Universal Setup

Menu item	Description
Units of Measure Inches Millimeters	Specify the unit of measurement for the universal paper. **Note:** Inches is the U.S. factory default setting. Millimeters is the international factory default setting.
Portrait Width 3.5–19 inches (8.5*) 88.9–482.6 mm (216*)	Set the portrait width of the universal paper.
Note: An asterisk (*) next to a value indicates the factory default setting.	

Menu item	Description
Portrait Height 3.5–19 inches (14*) 88.9–482.6 mm (356*)	Set the portrait height of the universal paper.
Feed Direction Short Edge* Long Edge	Set the printer to pick paper from the short edge or long edge direction. **Note:** Long Edge appears only when the longest edge is shorter than the maximum width supported.
Multiple Universal Sizes Tray [x] Multipurpose Feeder	Assign a unique dimension for multiple universal sizes that are loaded in each paper source. **Note:** This setting appears only when enabled in the Device menu. From the home screen, touch **Settings** > **Device** > **Maintenance** > **Configuration Menu** > **Tray Configuration** > **Multiple Universal Sizes**.
Note: An asterisk (*) next to a value indicates the factory default setting.	

Custom Scan Sizes

Menu item	Description
Custom Scan Size [x] Scan Size Name Width 1–8.5 inches (8.5*) 25.4–215.9 mm (215.9*) Height 1–25 inches (11*) 25.4–635 mm (279.4*) Orientation Portrait* Landscape 2 scans per side Off* On	Assign a scan size name and configure the scan settings.

Media Types

Menu item	Description
Plain Paper Card Stock Recycled Labels Bond Envelope Rough Envelope Letterhead Preprinted Colored Paper Light Paper Heavy Paper Rough/Cotton Custom Type [X]	Specify the texture, weight, and orientation of the paper.

Copy

Copy Defaults

Menu item	Description
Content Type Text Text/Photo* Photo Graphics	Improve the output result based on the content of the original document.
Content Source Black and White Laser* Color Laser Inkjet Photo/Film Magazine Newspaper Press Other	Improve the output result based on the source of the original document.
Sides 1 sided to 1 sided* 1 sided to 2 sided 2 sided to 1 sided 2 sided to 2 sided	Specify the scanning behavior based on the original document.
Note: An asterisk (*) next to a value indicates the factory default setting.	

Menu item	Description
Separator Sheets None* Between Copies Between Jobs Between Pages	Specify whether to insert blank separator sheets when printing.
Separator Sheet Source Tray [x] (1*) Multipurpose Feeder	Specify the paper source for the separator sheet.
Color Off On* Auto	Set the printer to generate color output from a scan job.
Pages per Side Off* 2 Portrait pages 4 Portrait pages 2 Landscape pages 4 Landscape pages	Specify the number of page images to print on one side of a sheet of paper.
Print Page Borders Off* On	Place a border around each image when printing multiple pages on a single page.
Collate Off [1,1,1,2,2,2] On [1,2,1,2,1,2]*	Print multiple copies in sequence.
"Copy from" Size [List of paper sizes]	Set the paper size of the original document. **Note:** Letter is the U.S. factory default setting. A4 is the international factory default setting.
"Copy to" Source Tray [x] (1*) Multipurpose Feeder Auto Size Match	Specify the paper source for the copy job.
Temperature -4 to 4 (0*)	Specify whether to generate a cooler or warmer output.
Darkness 1 to 9 (5*)	Adjust the darkness of the scanned image.
Number of Copies 1–9999 (1*)	Specify the number of copies.
Note: An asterisk (*) next to a value indicates the factory default setting.	

Menu item	Description
Header/Footer Left Header Middle Header Right Header Left Footer Middle Footer Right Footer	Specify the header or footer information on the scanned image.
Overlay Confidential Copy Draft Urgent Custom Off*	Specify the overlay text to print on each copy.
Custom overlay	Type the text for the Custom choice in the Overlay menu.
Note: An asterisk (*) next to a value indicates the factory default setting.	

Advanced Imaging

Menu item	Description
Color Balance Cyan - Red (0*) Magenta - Green (0*) Yellow - Blue (0*)	Adjust the color intensity for cyan, magenta, and yellow.
Color Dropout Color Dropout (None*) Default Red Threshold (128*) Default Green Threshold (128*) Default Blue Threshold(128*)	Specify which color to drop during scanning, and adjust the dropout setting for that color.
Auto Color Detect Color Sensitivity (5*) Area Sensitivity (5*)	Configure the auto color detection setting.
Contrast Best for content* 0–5	Specify the contrast for the scanned image.
Background Removal Background Detection (Content-based*) Level (0*)	Remove the background color or image noise from the original document. **Notes:** • Content-based removes the background color from the original document . • Fixed removes image noise from a photo.
Note: An asterisk (*) next to a value indicates the factory default setting.	

Menu item	Description
Auto Center Off* On	Align the content at the center of the page.
Mirror Image Off* On	Create a mirror image of the original document.
Negative Image Off* On	Create a negative image of the original document.
Shadow Detail -4 to 4 (0*)	Adjust the shadow detail in the original document.
Scan Edge to Edge Off* On	Scan the original document from edge to edge.
Sharpness 1–5 (3*)	Adjust the sharpness of the scanned image.
Note: An asterisk (*) next to a value indicates the factory default setting.	

Admin Controls

Menu item	Description
Allow Color Copies Off On*	Print copies in color.
Allow Priority Copies Off On*	Interrupt a print job to make copies.
Custom Job Scanning Off* On	Set the printer to scan the first set of original documents using the specified settings, and then scan the next set with the same or different settings. **Note:** This menu item appears only when a hard disk or an intelligent storage drive (ISD) is installed.
Allow Save as Shortcut Off On*	Save copy settings as a shortcut.
Adjust ADF Skew Off On*	Set the printer to adjust the skewed images from documents that are scanned from the ADF.
Sample copy Off* On	Print a sample copy to check the quality before printing the remaining copies. **Note:** This menu item appears only when a hard disk or an ISD is installed.
Note: An asterisk (*) next to a value indicates the factory default setting.	

Fax

Fax Defaults

Fax Mode

Menu item	Description
Fax Mode Fax* Fax Server Disabled	Select a fax mode.

Fax Setup

General Fax Settings

Menu item	Description
Fax Name	Specify your fax ID.
Fax Number	Specify your fax number.
Fax ID Fax Name Fax Number*	Set the fax ID to use during fax negotiation.
Enable Manual Fax Off* On	Turn on the manual fax function in the printer. **Notes:** • This menu item requires a line splitter and a telephone handset. • Use a regular telephone line to answer an incoming fax job and to dial a fax number. • To go directly to the manual fax function, touch **#** and **0** on the keypad.
Memory Use All receive Mostly receive Equal* Mostly send All send	Set the amount of internal printer memory allocated for faxing. **Note:** This menu item prevents memory buffer conditions and failed faxes.
Cancel Faxes Allow* Don't Allow	Cancel outgoing or incoming faxes.
Note: An asterisk (*) next to a value indicates the factory default setting.	

Menu item	Description
Fax Number Masking Off* From Left From Right	Specify the format for masking an outgoing fax number.
Digits to Mask 0–58 (0*)	Specify the number of digits to mask in an outgoing fax number.
Enable Line Connected Detection Off On*	Determine whether a telephone line is connected to the printer. **Note:** Events are detected immediately.
Enable Line In Wrong Jack Detection Off On*	Determine whether a telephone line is connected to the correct port on the printer. **Note:** Events are detected immediately.
Enable Extension in Use Support Off On*	Determine whether a telephone line is used by another device, such as another phone on the same line. **Note:** Events are detected immediately.
Optimize Fax Compatibility	Configure the printer fax functionality for optimal compatibility with other fax machines.
Fax Transport T.38 Analog G.711 etherFAX	Set the fax transport method. **Note:** This menu item appears only if an etherFAX or Fax over IP (FoIP) license bundle is installed in the printer.
Note: An asterisk (*) next to a value indicates the factory default setting.	

HTTPS Fax Settings

Note: This menu appears only if Fax Transport is set to etherFAX.

Menu item	Description
HTTPS service URL	Specify the etherFAX service URL.
HTTPS Proxy	Specify a proxy server URL.
HTTPS Proxy User	Specify the username and password for the proxy server.
HTTPS Proxy Password	
Fax Send Encryption Disabled Enabled* Required	Enable encryption for outgoing fax messages.
Note: An asterisk (*) next to a value indicates the factory default setting.	

Menu item	Description
Fax Receive Encryption Disabled Enabled* Required	Enable encryption for incoming fax messages.
HTTPS Fax Status	Show the etherFAX communication status.
Note: An asterisk (*) next to a value indicates the factory default setting.	

Fax Send Settings

Menu item	Description
Resolution Standard* Fine Super Fine Ultra Fine	Set the resolution of the scanned image. **Note:** A higher resolution increases fax transmission time and requires more memory.
Original Size [List of paper sizes] (Mixed Sizes*)	Specify the size of the original document.
Orientation Portrait* Landscape	Specify the orientation of the original document.
Sides Off* Short Edge Long Edge	Specify the orientation of the original document when scanning on both sides of the document.
Content Type Text* Text/Photo Photo Graphics	Improve the output result based on the content of the original document.
Content Source Black and White Laser* Color Laser Inkjet Photo/Film Magazine Newspaper Press Other	Improve the output result based on the source of the original document.
Darkness 1–9 (5*)	Adjust the darkness of the scanned image.
Note: An asterisk (*) next to a value indicates the factory default setting.	

Menu item	Description
Behind a PABX On Off*	Set the printer to dial a fax number without waiting to recognize the dial tone. **Note:** Private Automated Branch Exchange (PABX) is a telephone network that allows a single access number to offer multiple lines to outside callers.
Dial Mode Tone* Pulse	Specify the dial mode for incoming or outgoing faxes.
Note: An asterisk (*) next to a value indicates the factory default setting.	

Advanced Imaging

Menu item	Description
Color Balance Cyan - Red (0*) Magenta - Green (0*) Yellow - Blue (0*)	Adjust the color intensity during scanning.
Color Dropout Color Dropout (None*) Default Red Threshold (128*) Default Green Threshold (128*) Default Blue Threshold (128*)	Specify which color to drop during scanning, and adjust the dropout setting for that color.
Contrast Best for Content* 0 1 2 3 4 5	Set the contrast of the output.
Background Removal Level -4 to 4 (0*)	Adjust the amount of background visible on a scanned image.
Mirror Image Off* On	Create a mirror image of the original document.
Negative Image Off* On	Create a negative image of the original document.
Shadow Detail -4 to 4 (0*)	Adjust the amount of shadow detail visible on a scanned image.
Note: An asterisk (*) next to a value indicates the factory default setting.	

Menu item	Description
Scan Edge to Edge On Off*	Allow edge-to-edge scanning of the original document.
Sharpness 1–5 (3*)	Adjust the sharpness of the scanned image.
Temperature -4 to 4 (0*)	Specify whether to generate a cooler or warmer output.
Note: An asterisk (*) next to a value indicates the factory default setting.	

Admin Controls

Menu item	Description
Automatic Redial 0–9 (5*)	Specify the number of attempts that the printer redials before it cancels sending the fax to a specified destination.
Redial Frequency 1–200 minutes (3*)	Increase the time between redial attempts to increase the chance of sending fax successfully.
Enable ECM On* Off	Activate Error Correction Mode (ECM) for fax jobs. **Note:** ECM detects and corrects errors in the fax transmission process caused by telephone line noise and poor signal strength.
Enable Fax Scans On* Off	Create faxes using the printer scanner.
Driver to Fax On* Off	Allow the print driver to send fax.
Allow Save as Shortcut On* Off	Save fax numbers as shortcuts on the printer.
Max Speed 33600* 14400 9600 4800 2400	Set the maximum speed for sending fax.
Custom Job Scanning Off* On	Turn on scanning of custom jobs by default. **Note:** This menu item appears only when a hard disk or an intelligent storage drive (ISD) is installed.
Note: An asterisk (*) next to a value indicates the factory default setting.	

Menu item	Description
Scan Preview Off* On	Show a preview of the scan on the display. **Note:** This menu item appears only when a hard disk or an ISD is installed.
Adjust ADF Skew Off On*	Correct slight skew in the scanned image.
Enable Color Fax Scans Off by Default* On by Default Never Use Always Use	Enable color scans for fax.
Auto Convert Color Faxes to Mono Faxes On* Off	Convert all outgoing color faxes to black and white.
Confirm Fax Number Off* On	Ask the user to confirm the fax number.
Dial Prefix	Set a dialing prefix.
Dialing Prefix Rules	Establish a dialing prefix rule.
Note: An asterisk (*) next to a value indicates the factory default setting.	

Fax Receive Settings

Menu item	Description
Fax Job Waiting None* Toner Toner and Supplies	Remove fax jobs that request specific unavailable resources from the print queue. **Note:** This menu item appears only when a hard disk is installed.
Rings to Answer 1–25 (3*)	Set the number of rings required before the printer answers the incoming calls.
Auto Reduction On* Off	Scale incoming fax to fit on the page.
Paper Source Tray [X] Multipurpose Feeder Auto*	Set the paper source for printing incoming fax.
Sides On Off*	Print on both sides of the paper.
Note: An asterisk (*) next to a value indicates the factory default setting.	

Menu item	Description
Separator Sheets None* Before Job After Job	Specify whether to insert blank separator sheets when printing.
Separator Sheet Source Tray [X] (1*) Multipurpose Feeder	Specify the paper source for the separator sheet.
Output Bin Standard Bin	Specify the output bin for received faxes.
Fax Footer On Off*	Print the transmission information at the bottom of each page from a received fax.
Fax Footer Time Stamp Receive* Print	Print the time stamp at the bottom of each page from a received fax.
Holding Faxes Held Fax Mode Off* Always On Manual Scheduled	Hold received faxes from printing until they are released.
Holding Faxes Fax Holding Schedule	Assign a schedule for holding faxes. **Note:** This menu item appears only if Held Fax Mode is set to Scheduled.
Note: An asterisk (*) next to a value indicates the factory default setting.	

Admin Controls

Menu item	Description
Enable Fax Receive On* Off	Set the printer to receive fax.
Enable Color Fax Receive On* Off	Set the printer to receive fax in color.
Enable Caller ID On Off*	Show the caller ID information of the incoming call on the printer display.
Block No Name Fax On Off*	Block incoming faxes without fax IDs.
Note: An asterisk (*) next to a value indicates the factory default setting.	

Menu item	Description
Banned Fax List Add Banned Fax	Specify the phone numbers that you want to block.
Answer On All Rings* Single Ring Only Double Ring Only Triple Ring Only Single or Double Rings Only Single or Triple Rings Only Double or Triple Rings Only	Set a distinctive ring pattern for incoming fax.
Auto Answer On* Off	Set the printer to receive fax automatically.
Manual Answer Code 0–9 (9*)	Manually enter a code on the telephone number pad to begin receiving fax. **Notes:** • This menu item appears only when the printer shares a line with a telephone. • This menu item appears only when you set the printer to receive fax manually.
Fax Forwarding Print* Print and Forward Forward	Specify whether to forward received fax.
Forward To Destination 1 Destination 2	Specify where to forward received fax. **Note:** This menu item appears only when Fax Forwarding is set to Print and Forward or Forward.
Confirmation E-mail	Specify the email address to receive faxes through FTP or network folder. **Note:** This menu item appears only when Fax Forwarding is set to Print and Forward or Forward.
Max Speed 33600* 14400 9600 4800 2400	Set the maximum speed for transmitting fax.
Note: An asterisk (*) next to a value indicates the factory default setting.	

Fax Cover Page

Menu item	Description
Fax Cover Page Off by Default* On by Default Never Use Always Use	Configure the settings for the fax cover page.
Include To field Off* On	
Include From field Off* On	
From	
Include Message Field Off* On	
Message:	
Include Logo Off* On	
Include Footer [x] Off* On	
Footer [x]	
Note: An asterisk (*) next to a value indicates the factory default setting.	

Fax Log Settings

Menu item	Description
Transmission Log Frequency Always* Never Only for Error	Specify how often the printer creates a transmission log.
Transmission Log Action Print Off On* E-mail Off* On	Print or email a log for successful fax transmission or transmission error.
Note: An asterisk (*) next to a value indicates the factory default setting.	

Menu item	Description
Receive Error Log Print Never* Print on Error	Print a log for fax-receive failures.
Auto Print Logs On* Off	Print all fax activity.
Log Paper Source Tray [x] (1*) Multipurpose Feeder	Specify the paper source for printing logs.
Logs Display Remote Fax Name* Dialed Number	Identify the sender by remote fax name or fax number.
Enable Job Log On* Off	View a summary of all fax jobs.
Enable Call Log On* Off	View a summary of the fax call history.
Log Output Bin Standard Bin* Bin [x]	Specify the output bin for printed logs.
Note: An asterisk (*) next to a value indicates the factory default setting.	

Speaker Settings

Menu item	Description
Speaker Mode Always Off* Always On On until Connected	Set the fax speaker mode.
Speaker Volume Low* High	Adjust the fax speaker volume.
Ringer Volume Off* On	Enable the ringer volume.
Note: An asterisk (*) next to a value indicates the factory default setting.	

VoIP Settings

Menu item	Description
VoIP Protocol SIP* H.323	Set the Voice over Internet Protocol (VoIP) protocol.
STUN Server	Specify the STUN server to traverse a firewall.
Force Fax Mode Off On*	Switch VoIP gateway from analog to T.38 at the beginning of a fax call.
Force Fax Mode Delay 0–15 (7*)	Set the time delay in seconds when sending another invite of Force Fax Mode.
Note: An asterisk (*) next to a value indicates the factory default setting.	

SIP Settings

Menu item	Description
Proxy	Specify the IP address of the system that converts the phone number to an IP address where the fax is sent.
Registrar	Specify a name or IP address of the system that handles the registration of Session Initiation Protocol (SIP) clients.
User	Specify the name of the user for SIP.
Password	Specify the password that is used in registering with the SIP Registrar.
Auth ID	The username that is used when registering. **Note:** If the Auth ID setting is not set, the setting uses the username of the User field instead.
Transport For Registration UDP* TCP	Set the SIP transport type for registration.
Transport For Incoming Calls UDP* TCP UDP And TCP	Set the SIP transport type for incoming calls.
Transport For Outgoing Calls UDP* TCP	Set the SIP transport type for outgoing calls.
Outbound Proxy	Specify an outbound proxy to forward all SIP communication.
Contact	Specify a contact name for SIP.
Note: An asterisk (*) next to a value indicates the factory default setting.	

Menu item	Description
Realm	Specify a realm name for SIP. **Note:** If the Realm setting is not set, the setting uses the name of the Contact instead.
SIP Registration Status	Show the status of the SIP Registration.
Note: An asterisk (*) next to a value indicates the factory default setting.	

H.323 Settings

Menu item	Description
Gateway	Specify the H.323 gateway IP address.
Gatekeeper	Specify the H.323 gatekeeper.
User	Specify the username used with the H.323 gateway.
Password	Specify the password for the H.323 gateway.
Enable Fast Start Off* On	Enable Fast Start.
Disable H.245 Tunneling Off* On	Disable H.323 Tunneling.
Disable Gatekeeper Discovery Off On*	Disable H.323 Gatekeeper Discovery.
Note: An asterisk (*) next to a value indicates the factory default setting.	

T.38 Settings

Menu item	Description
Indicator Redundancy 0–5 (3*)	Set the number of times that a fax indicator is repeated in the T.38 communication.
Low Speed Redundancy 0–5 (3*)	Set the number of times that low speed data is repeated in the T.38 communication.
High Speed Redundancy 0–5 (1*)	Set the number of times that high-speed data is repeated in the T.38 communication.
Note: An asterisk (*) next to a value indicates the factory default setting.	

Fax Server Setup

General Fax Settings

Menu item	Description
To Format	Specify a fax recipient. **Note:** If you want to use the fax number, then type the number sign (#) before a number.
Reply Address	Specify a reply address for sending fax.
Subject	Specify the fax subject and message.
Message	
Enable analog receive Off* On	Set the printer to receive analog faxes.
Note: An asterisk (*) next to a value indicates the factory default setting.	

Fax Server E-mail Settings

Menu item	Description
Use E-mail SMTP Server On Off*	Use the Simple Mail Transfer Protocol (SMTP) settings for email in receiving and sending faxes. **Note:** When set to On, all other settings of the Fax Server E-mail Settings menu are not shown.
Primary SMTP Gateway	Type the IP address or host name of the primary SMTP server.
Primary SMTP Gateway Port 1–65535 (25*)	Enter the port number of the primary SMTP server.
Secondary SMTP Gateway	Type the server IP address or host name of your secondary or backup SMTP server.
Secondary SMTP Gateway Port 1–65535 (25*)	Enter the server port number of your secondary or backup SMTP server.
SMTP Timeout 5–30 (30*)	Set the time before the printer times out if the SMTP server does not respond.
Reply Address	Specify a reply address for sending fax.
Use SSL/TLS Disabled* Negotiate Required	Specify whether to send fax using an encrypted link.
Require Trusted Certificate Off On*	Specify a trusted certificate when accessing the SMTP server.
Note: An asterisk (*) next to a value indicates the factory default setting.	

Menu item	Description
SMTP Server Authentication No authentication required* Login / Plain NTLM CRAM-MD5 Digest-MD5 Kerberos 5	Set the authentication type for the SMTP server.
Device-Initiated E-mail None* Use Device SMTP Credentials	Specify whether credentials are required for device-initiated email.
User-Initiated E-mail None* Use Device SMTP Credentials Use Session User ID and Password Use Session E-mail address and Password Prompt user	Specify whether credentials are required for user-initiated email.
Use Active Directory Device Credentials Off* On	Enable user credentials and group destinations to connect to the SMTP server.
Device Userid	Specify the user ID and password to connect to the SMTP server.
Device Password	
Kerberos 5 REALM	Specify the realm for the Kerberos 5 authentication protocol.
NTLM Domain	Specify the domain name for the NTLM security protocol.
Disable "SMTP server not set up" error Off* On	Hide the “SMTP server not set up” error message.
Note: An asterisk (*) next to a value indicates the factory default setting.	

Fax Server Scan Settings

Menu item	Description
Image Format TIFF (.tif) PDF (.pdf)* XPS (.xps) TXT (.txt) RTF (.rtf) DOCX (.docx) XLSX (.xlsx) CSV (.csv)	Specify the file format for the scanned image. **Note:** TXT (.txt), RTF (.rtf), DOCX (.docx), XLSX (.xlsx), and CSV (.csv) appear only if you have purchased and installed an OCR solution.
Content Type Text* Text/Photo Photo Graphics	Improve the output result based on the content of the original document.
Content Source Black and White Laser* Color Laser Inkjet Photo/Film Magazine Newspaper Press Other	Improve the output result based on the source of the original document.
Fax Resolution Standard* Fine Super Fine Ultra Fine	Set the fax resolution.
Sides Off* Short Edge Long Edge	Specify the orientation of the original document when scanning on both sides of the document.
Darkness 1–9 (5*)	Set the darkness of the output.
Orientation Portrait* Landscape	Specify the orientation of text and graphics on the page.
Note: An asterisk (*) next to a value indicates the factory default setting.	

Menu item	Description
Original Size [List of paper sizes]	Set the paper size of the original document. **Notes:** • Mixed Sizes is the U.S. factory default setting. A4 is the international factory default setting. • This setting may vary depending on your printer model.
Use Multi-Page TIFF Off On*	Choose between single- and multiple-page TIFF files.
Note: An asterisk (*) next to a value indicates the factory default setting.	

E-mail

E-mail Setup

Menu item	Description
Primary SMTP Gateway	Type the IP address or host name of the primary SMTP server for sending e-mail.
Primary SMTP Gateway Port 1–65535 (25*)	Enter the port number of the primary SMTP server.
Secondary SMTP Gateway	Type the server IP address or host name of your secondary or backup SMTP server.
Secondary SMTP Gateway Port 1–65535 (25*)	Enter the server port number of your secondary or backup SMTP server.
SMTP Timeout 5–30 seconds (30*)	Set the time before the printer times out if the SMTP server does not respond.
Reply Address	Specify a reply address in the e-mail.
Always use SMTP default Reply Address On Off*	Always use the default reply address in the SMTP server.
Use SSL/TLS Disabled* Negotiate Required	Specify whether to send e-mail using an encrypted link.
Require Trusted Certificate Off On*	Require a trusted certificate when accessing the SMTP server.
Note: An asterisk (*) next to a value indicates the factory default setting.	

Menu item	Description
SMTP Server Authentication No authentication required* Login / Plain NTLM CRAM-MD5 Digest-MD5 Kerberos 5	Set the authentication type for the SMTP server.
Device-Initiated E-mail None* Use Device SMTP Credentials	Specify whether credentials are required for device-initiated e-mail.
User-Initiated E-mail None* Use Device SMTP Credentials Use Session User ID and Password Use Session E-mail address and Password Prompt user	Specify whether credentials are required for user-initiated e-mail.
Use Active Directory Device Credentials Off* On	Specify whether credentials are required for user-initiated e-mail.
Device Userid	Specify the user ID and password to connect to the SMTP server.
Device Password	
Kerberos 5 REALM	Specify the realm for the Kerberos 5 authentication protocol.
NTLM Domain	Specify the domain name for the NTLM security protocol.
Disable "SMTP server not set up" error Off* On	Hide the "SMTP server not set up" error message.
Note: An asterisk (*) next to a value indicates the factory default setting.	

E-mail Defaults

Menu item	Description
Subject:	Specify the e-mail subject and message.
Message:	
File Name	Specify the filename for the scanned document.
Note: An asterisk (*) next to a value indicates the factory default setting.	

Menu item	Description
Format JPEG (.jpg) PDF (.pdf)* TIFF (.tif) XPS (.xps) TXT (.txt) RTF (.rtf) DOCX (.docx) XLSX (.xlsx) CSV (.csv)	Specify the file format of the scanned document. **Note:** TXT (.txt), RTF (.rtf), DOCX (.docx), XLSX (.xlsx), and CSV (.csv) appear only if you have purchased and installed an OCR solution.
Global OCR Settings Recognized Languages Auto Rotate (Off*) Despeckle (Off*) Auto Contrast Enhance (Off*)	Configure the settings for optical character recognition (OCR). **Note:** This menu item appears only if you have purchased and installed an OCR solution.
PDF Settings PDF Version (1.5*) Archival Version (A-1a*) Highly Compressed (Off*) Secure (Off*) Searchable (Off*) Archival (PDF/A) (Off*)	Configure the PDF settings of the scanned document. **Notes:** • Archival Version and Archival (PDF/A) are supported only when PDF Version is set to 1.4. • Highly Compressed appears only when a hard disk or an intelligent storage drive (ISD) is installed. • Searchable appears only if you have purchased and installed an OCR solution.
Content Type Text Text/Photo* Photo Graphics	Improve the output result based on the content type of the original document.
Content Source Black and White Laser* Color Laser Inkjet Photo/Film Magazine Newspaper Press Other	Improve the output result based on the content source of the original document.
Color Black and White Gray Color* Auto	Set the printer to capture file content in color or in mono.
Note: An asterisk (*) next to a value indicates the factory default setting.	

Menu item	Description
Resolution 75 dpi 150 dpi* 200 dpi 300 dpi 400 dpi 600 dpi	Set the resolution of the scanned image.
Darkness 1–9 (5*)	Adjust the darkness of the scanned image.
Orientation Portrait* Landscape	Specify the orientation of the original document.
Original Size Mixed Sizes*	Set the paper size of the original document.
Sides Off* Short Edge Long Edge	Specify the orientation of the original document when scanning on both sides of the document.
Note: An asterisk (*) next to a value indicates the factory default setting.	

Advanced Imaging

Menu item	Description
Color Balance Cyan - Red (0*) Magenta - Green (0*) Yellow - Blue (0*)	Adjust the color intensity for cyan, magenta, and yellow.
Color Dropout Color Dropout (None*) Default Red Threshold (128*) Default Green Threshold (128*) Default Blue Threshold (128*)	Specify which color to drop during scanning, and adjust the dropout setting for that color.
Auto Color Detect Color Sensitivity (5*) Area Sensitivity (5*) E-mail Bit Depth (1 bit*) Minimum Scan Resolution (300 dpi*)	Configure the auto color detection setting.
JPEG Quality Best for content* 5–95	Set the JPEG quality of the scanned image.
Note: An asterisk (*) next to a value indicates the factory default setting.	

Menu item	Description
Contrast Best for content* 0–5	Specify the contrast for the scanned image.
Background Removal Background Detection (Content-based*) Level (0*)	Remove the background color or image noise from the original document. **Notes:** • Content-based removes the background color from the original document. • Fixed removes image noise from a photo.
Mirror Image Off* On	Create a mirror image of the original document.
Negative Image Off* On	Create a negative image of the original document.
Shadow Detail -4 to 4 (0*)	Adjust the shadow detail in the scanned image.
Scan Edge to Edge Off* On	Scan the original document from edge to edge.
Sharpness 1–5 (3*)	Adjust the sharpness in the scanned image.
Temperature -4 to 4 (0*)	Generate a bluer or redder output of the original document.
Blank Pages Blank Page Removal (Do Not Remove*) Blank Page Sensitivity (5*)	Set the sensitivity of scans in relation to blank pages in the original document.
Note: An asterisk (*) next to a value indicates the factory default setting.	

Admin Controls

Menu item	Description
Max E-mail Size 0–65535 (0*)	Set the allowable file size for each e-mail.
Size Error Message	Specify an error message that the printer sends when an e-mail exceeds its allowable file size. **Note:** You can type up to 1024 characters.
Limit Destinations	Limit sending of e-mail only to the specified list of domain name. **Note:** Use a comma to separate each domain.
Note: An asterisk (*) next to a value indicates the factory default setting.	

Menu item	Description
Send Me a Copy Never appears* On by Default Off by Default Always On	Send a copy of the e-mail to yourself.
Allow self e-mails only Off* On	Set the printer to send e-mails to yourself only.
Use cc:/bcc: Off* On	Enable carbon copy and blind carbon copy in e-mail.
Use Multi-Page TIFF Off On*	Enable scanning of multiple TIFF images in one TIFF file.
TIFF Compression JPEG LZW*	Specify the compression type for TIFF files.
Text Default 5–95 (75*)	Set the text quality in the content being scanned.
Text/Photo Default 5–95 (75*)	Set the text and photo quality in the content being scanned.
Photo Default 5–95 (50*)	Set the photo quality of the content being scanned.
Adjust ADF Skew Off On*	Set the printer to adjust the skewed images from documents that are scanned from the ADF.
Transmission Log Print log* Do Not Print Log Print Only For Error	Print a transmission log for e-mail scans.
Log Paper Source Tray [x] (1*) Multipurpose Feeder	Specify the paper source for printing e-mail logs.
Custom Job Scanning Off* On	Set the printer to scan the first set of original documents using the specified settings, and then scan the next set with the same or different settings. **Note:** This menu item appears only when a hard disk or an ISD is installed.
Note: An asterisk (*) next to a value indicates the factory default setting.	

Menu item	Description
Scan Preview Off* On	Show a scan preview of the original document. **Note:** This menu item appears only when a hard disk or an ISD is installed.
Allow Save as Shortcut Off On*	Save an e-mail address as a shortcut.
E-mail Images Sent As Attachment* Web Link	Specify how to send the images that are included in the e-mail.
Reset E-mail Information After Sending Off On*	Reset the To, Subject, Message, and Filename fields to their default values after sending an e-mail.
Note: An asterisk (*) next to a value indicates the factory default setting.	

Web Link Setup

Menu item	Description
Server	Specify the credentials of the server that is hosting the images that are included in the e-mail.
Login	
Password	
Path	
File Name	
Web Link	

FTP

FTP Defaults

Menu item	Description
Format JPEG (.jpg) PDF (.pdf)* TIFF (.tif) XPS (.xps) TXT (.txt) RTF (.rtf) DOCX (.docx) XLSX (.xlsx) CSV (.csv)	Specify the file format for the scanned image. **Note:** TXT (.txt), RTF (.rtf), DOCX (.docx), XLSX (.xlsx), and CSV (.csv) appear only if you have purchased and installed an OCR solution.
Global OCR Settings Recognized Languages Auto Rotate (Off*) Despeckle (Off*) Auto Contrast Enhance (Off*)	Configure the settings for optical character recognition (OCR). **Note:** This menu item appears only if you have purchased and installed an OCR solution.
PDF Settings PDF Version (1.5*) Archival Version (A-1a*) Highly Compressed (Off*) Secure (Off*) Searchable (Off*) Archival (PDF/A) (Off*)	Configure the PDF settings for the scanned image. **Notes:** • Archival Version and Archival (PDF/A) are supported only when PDF Version is set to 1.4. • Highly Compressed appears only when a hard disk or an intelligent storage drive (ISD) is installed. • Searchable appears only if you have purchased and installed an OCR solution.
Content Type Text Text/Photo* Graphics Photo	Improve the output result based on the content type of the original document.
Content Source Black and White Laser* Color Laser Inkjet Photo/Film Magazine Newspaper Press Other	Improve the output result based on the content source of the original document.
Note: An asterisk (*) next to a value indicates the factory default setting.	

Menu item	Description
Color Black and White Gray Color* Auto	Set the printer to capture file content in color or in mono.
Resolution 75 dpi 150 dpi* 200 dpi 300 dpi 400 dpi 600 dpi	Set the resolution of the scanned image.
Darkness 1–9 (5*)	Adjust the darkness of the scanned image.
Orientation Portrait* Landscape	Specify the orientation of the original document.
Original Size Mixed Sizes*	Set the paper size of the original document.
Sides Off* Long Edge Short Edge	Specify the orientation when scanning on both sides of the document.
File Name	Specify the file name of the scanned image.
Note: An asterisk (*) next to a value indicates the factory default setting.	

Advanced Imaging

Menu item	Description
Color Balance Cyan - Red (0*) Magenta - Green (0*) Yellow - Blue (0*)	Adjust the color intensity for cyan, magenta, and yellow.
Color Dropout Color Dropout (None*) Default Red Threshold (128*) Default Green Threshold (128*) Default Blue Threshold (128*)	Specify which color to drop during scanning, and adjust the dropout setting for that color.
Note: An asterisk (*) next to a value indicates the factory default setting.	

Menu item	Description
Auto Color Detect Color Sensitivity (5*) Area Sensitivity (5*) FTP Bit Depth (1 bit*) Minimum Scan Resolution (300 dpi*)	Configure the auto color detection setting.
JPEG Quality Best for content* 5–95	Set the JPEG quality of the scanned image.
Contrast Best for content* 0 1 2 3 4 5	Specify the contrast for the scanned image.
Background Removal Background Detection (Content-based*) Level (0*)	Remove the background color or image noise from the original document. **Notes:** • Content-based removes the background color from the original document. • Fixed removes image noise from a photo.
Mirror Image Off* On	Create a mirror image of the original document.
Negative Image Off* On	Create a negative image of the original document.
Shadow Detail -4 to 4 (0*)	Adjust the shadow detail in the scanned image.
Scan Edge to Edge Off* On	Allow edge-to-edge scanning of the original document.
Sharpness 1–5 (3*)	Adjust the sharpness in the scanned image.
Temperature -4 to 4 (0*)	Generate a bluer or redder output of the original document.
Blank Pages Blank Page Removal (Do Not Remove*) Blank Page Sensitivity (5*)	Set the sensitivity of scans in relation to blank pages in the original document.
Note: An asterisk (*) next to a value indicates the factory default setting.	

Admin Controls

Menu item	Description
Text Default 5–95 (75*)	Set the quality of text on the scanned image.
Text/Photo Default 5–95 (75*)	Set the quality of text and photo on the scanned image.
Photo Default 5–95 (50*)	Set the quality of photo on the scanned image.
Use Multi-Page TIFF On* Off	Enable scanning of multiple TIFF images in one TIFF file.
TIFF Compression LZW* JPEG	Specify the compression type for TIFF files.
Transmission Log Print Log* Do Not Print Log Print Only For Error	Print a transmission log for FTP scans.
Log Paper Source Tray [x] (1*) Multipurpose Feeder	Specify the paper source for printing FTP logs.
Custom Job Scanning Off* On	Set the printer to scan the first set of original documents using the specified settings, and then scan the next set with the same or different settings. **Note:** This menu item appears only when a hard disk or an ISD is installed.
Scan Preview Off* On	Show a preview of the original document. **Note:** This menu item appears only when a hard disk or an ISD is installed.
Allow Save as Shortcut Off On*	Save an FTP address as a shortcut.
Adjust ADF Skew Off* On	Set the printer to adjust the skewed images from documents that are scanned from the ADF.
Use Passive FTP Off* On	Let the FTP server specify the data port that the printer connects to.
Note: An asterisk (*) next to a value indicates the factory default setting.	

USB Drive

Flash Drive Scan

Menu item	Description
Format JPEG (.jpg) PDF (.pdf)* TIFF (.tif) XPS (.xps) TXT (.txt) RTF (.rtf) DOCX (.docx) XLSX (.xlsx) CSV (.csv)	Specify the file format for the scanned image. **Note:** TXT (.txt), RTF (.rtf), DOCX (.docx), XLSX (.xlsx), and CSV (.csv) appear only if you have purchased and installed an OCR solution.
Global OCR Settings Recognized Languages Auto Rotate (Off*) Despeckle (Off*) Auto Contrast Enhance (Off*)	Configure the settings for optical character recognition (OCR). **Note:** This menu item appears only if you have purchased and installed an OCR solution.
PDF Settings PDF Version (1.5*) Archival Version (A-1a*) Highly Compressed (Off*) Secure (Off*) Searchable (Off*) Archival (PDF/A) (Off*)	Configure the PDF settings of the scanned image. **Notes:** • Archival Version and Archival (PDF/A) are supported only when PDF Version is set to 1.4. • Highly Compressed appears only when a hard disk or an intelligent storage drive (ISD) is installed. • Searchable appears only if you have purchased and installed an OCR solution.
Content Type Text Text/Photo* Graphics Photo	Improve the output result based on the content type of the original document.
Content Source Black and White Laser* Color Laser Inkjet Photo/Film Magazine Newspaper Press Other	Improve the output result based on the content source of the original document.
Note: An asterisk (*) next to a value indicates the factory default setting.	

Menu item	Description
Color Black and White Gray Color* Auto	Set the printer to capture file content in color or in mono.
Resolution 75 dpi 150 dpi* 200 dpi 300 dpi 400 dpi 600 dpi	Set the resolution of the scanned image.
Darkness 1–9 (5*)	Adjust the darkness of the scanned image.
Orientation Portrait* Landscape	Specify the orientation of the original document.
Original Size Mixed Sizes*	Set the paper size of the original document.
Sides Off* Long edge Short edge	Specify the orientation of the original document when scanning on both sides of the document.
File Name	Specify the file name of the scanned image.
Note: An asterisk (*) next to a value indicates the factory default setting.	

Advanced Imaging

Menu item	Description
Color Balance Cyan - Red (0*) Magenta - Green (0*) Yellow - Blue (0*)	Adjust the color intensity for cyan, magenta, and yellow.
Color Dropout Color Dropout (None*) Default Red Threshold (128*) Default Green Threshold (128*) Default Blue Threshold (128*)	Specify which color to drop during scanning, and adjust the dropout setting for that color.
Note: An asterisk (*) next to a value indicates the factory default setting.	

Menu item	Description
Auto Color Detect Color Sensitivity (5*) Area Sensitivity (5*) Scan Bit Depth (1 bit*) Minimum Scan Resolution (300 dpi*)	Configure the auto color detection setting.
JPEG Quality Best for content* 5–95	Set the JPEG quality of the scanned image.
Contrast Best for content* 0–5	Specify the contrast for the scanned image.
Background Removal Background Detection (Content-based*) Level (0*)	Remove the background color or image noise from the original document. **Notes:** • Content-based removes the background color from the original document. • Fixed removes image noise from a photo.
Mirror Image Off* On	Create a mirror image of the original document.
Negative Image Off* On	Create a negative image of the original document.
Shadow Detail -4 to 4 (0*)	Adjust the shadow detail in the scanned image.
Scan Edge to Edge Off* On	Scan the original document from edge to edge.
Sharpness 1–5 (3*)	Adjust the sharpness in the scanned image.
Temperature -4 to 4 (0*)	Generate a bluer or redder output of the original document.
Blank Pages Blank Page Removal (Do Not Remove*) Blank Page Sensitivity (5*)	Set the sensitivity of scans in relation to blank pages in the original document.
Note: An asterisk (*) next to a value indicates the factory default setting.	

Admin Controls

Menu item	Description
Text Default 5–95 (75*)	Set the quality of text on the scanned image.
Text/Photo Default 5–95 (75*)	Set the quality of text and photo on the scanned image.
Photo Default 5–95 (50*)	Set the quality of a photo on the scanned image.
Use Multi-Page TIFF Off On*	Enable scanning of multiple TIFF images in one TIFF file.
TIFF Compression LZW* JPEG	Specify the compression type for TIFF files.
Custom Job Scanning Off* On	Set the printer to scan the first set of original documents using the specified settings, and then scan the next set with the same or different settings. **Note:** This menu item appears only when a hard disk or an ISD is installed.
Scan Preview Off* On	Show a scan preview of the original document. **Note:** This menu item appears only when a hard disk or an ISD is installed.
Adjust ADF Skew Off* On	Set the printer to adjust the skewed images from documents that are scanned from the ADF.
Note: An asterisk (*) next to a value indicates the factory default setting.	

Flash Drive Print

Menu item	Description
Number of Copies 1–9999 (1*)	Set the number of copies.
Paper Source Tray [x] (1*) Multipurpose Feeder Manual Paper Manual Envelope	Set the paper source for the print job.
Collate Off [1,1,1,2,2,2] On [1,2,1,2,1,2]*	Keep the pages of a print job stacked in sequence, particularly when printing multiple copies of the job.
Note: An asterisk (*) next to a value indicates the factory default setting.	

Menu item	Description
Sides 1-Sided* 2-Sided	Specify whether to print on one side or both sides of the paper.
Flip Style Long Edge* Short Edge	Determine which side of the paper is bound when performing two-sided printing.
Pages per Side Off* 2 pages per side 3 pages per side 4 pages per side 6 pages per side 9 pages per side 12 pages per side 16 pages per side	Print multiple page images on one side of a sheet of paper.
Pages per Side Ordering Horizontal* Reverse Horizontal Reverse Vertical Vertical	Specify the positioning of multiple page images when using Pages per Side menu.
Pages per Side Orientation Auto* Landscape Portrait	Specify the orientation of multiple page images when using Pages per Side menu.
Pages per Side Border None* Solid	Print a border around each page image when using Pages per Side menu.
Separator Sheets Off* Between Copies Between Jobs Between Pages	Insert blank separator sheets when printing.
Separator Sheet Source Tray [x] (1*) Multipurpose Feeder	Specify the paper source for the separator sheet.
Blank Pages Do Not Print* Print	Print blank pages in a print job.
Note: An asterisk (*) next to a value indicates the factory default setting.	

Network/Ports

Network Overview

Menu item	Description
Active Adapter Auto* Standard Network Wireless	Specify the type of the network connection. **Note:** Wireless is available only in printers connected to a wireless network.
Network Status	Show the connectivity status of the printer network.
Display Network Status on Printer Off On*	Show the network status on the display.
Speed, Duplex	Show the speed of the currently active network card.
IPv4	Show the IPv4 address.
All IPv6 Addresses	Show all IPv6 addresses.
Reset Print Server	Reset all active network connections to the printer. **Note:** This setting removes all network configuration settings.
Network Job Timeout Off On* (90 seconds)	Set the time before the printer cancels a network print job.
Banner Page Off* On	Print a banner page.
Scan to PC Port Range	Specify a valid port range for printers that are behind a port blocking firewall.
Enable Network Connections Off On*	Enable the printer to connect to a network.
Enable LLDP Off* On	Enable Link Layer Discovery Protocol (LLDP) in the printer.
Note: An asterisk (*) next to a value indicates the factory default setting.	

Wireless

Note: This menu is available only in printers connected to a Wi-Fi network or printers that have a wireless network adapter.

Menu item	Description
Setup Using Mobile App	Configure the Wi-Fi connection using Lexmark Mobile Assistant.

Menu item	Description
Setup On Printer Panel Choose Network Add Wi-Fi Network Network Name Network Mode Infrastructure Wireless Security Mode Disabled* WPA2/WPA - Personal WPA2 - Personal WPA2/WPA3 - Personal WPA3 - Personal 802.1x - RADIUS	Configure the Wi-Fi connection using the control panel. **Note:** This menu item appears as *Wireless Connection Setup* in the Embedded Web Server.
Wi-Fi Protected Setup Start Push Button Method Start PIN Method	Establish a Wi-Fi network and enable network security. **Notes:** • Start Push Button Method connects the printer to a Wi-Fi network when buttons on both the printer and the access point (wireless router) are pressed within a given time. • Start PIN Method connects the printer to a Wi-Fi network when a PIN on the printer is entered into the wireless settings of the access point.
Compatibility 802.11b/g/n (2.4GHz)* 802.11a/b/g/n/ac (2.4GHz/5GHz) 802.11a/n/ac (5GHz)	Specify the standard for the Wi-Fi network. **Note:** 802.11a/b/g/n/ac (2.4GHz/5GHz) and 802.11a/n/ac (5GHz) only appear when a Wi-Fi option is installed.
Wireless Security Mode Disabled* WPA2/WPA-Personal WPA2-Personal WPA2/WPA3 - Personal WPA3 - Personal 802.1x - RADIUS	Set the security mode for connecting the printer to Wi-Fi devices.
WPA2/WPA Personal AES*	Enable Wi-Fi security through Wi-Fi Protected Access (WPA). **Note:** This menu item appears only when the Wireless Security Mode is set to WPA2/WPA-Personal.
Set PSK	Set the password for secure Wi-Fi connection.
WPA2-Personal AES*	Enable Wi-Fi security through WPA2. **Note:** This menu item appears only when the Wireless Security Mode is set to WPA2-Personal.
802.1x Encryption Mode WPA+ WPA2* WPA2 + PMF*	Enable Wi-Fi security through 802.1x standard. **Note:** This menu item appears only when the Wireless Security Mode is set to 802.1x - RADIUS.

Menu item	Description
IPv4 Enable DHCP On* Off Set Static IP Address IP Address Netmask Gateway	Enable and configure IPv4 settings in the printer.
IPv6 Enable IPv6 On* Off Enable DHCPv6 On Off* Stateless Address Autoconfiguration On* Off DNS Server Address Manually Assigned IPv6 Address Manually Assigned IPv6 Router Address Prefix All IPv6 Addresses All IPv6 Router Addresses	Enable and configure IPv6 settings in the printer.
Network Address UAA LAA	View the network addresses.
PCL SmartSwitch On* Off	Set the printer to switch automatically to PCL emulation when a print job requires it, regardless of the default printer language. **Note:** If PCL SmartSwitch is off, then the printer does not examine incoming data and uses the default printer language specified in the Setup menu.
PS SmartSwitch On* Off	Set the printer to switch automatically to PS emulation when a print job requires it, regardless of the default printer language. **Note:** If PS SmartSwitch is off, then the printer does not examine incoming data and uses the default printer language specified in the Setup menu.
Job Buffering On Off*	Temporarily store print jobs in the hard disk or intelligent storage drive (ISD) before printing. **Note:** This menu item appears only when a hard disk or an ISD is installed.

Menu item	Description
Mac Binary PS Auto* On Off	Set the printer to process Macintosh binary PostScript print jobs. **Notes:** • On processes raw binary PostScript print jobs. • Off filters print jobs using the standard protocol.

Wi-Fi Direct

Note: This menu is available only in printers connected to a Wi-Fi network or printers that have a wireless network adapter.

Menu item	Description
Enable Wi-Fi Direct On Off*	Set the printer to connect directly to Wi-Fi devices.
Wi-Fi Direct Name	Specify the name of the Wi-Fi Direct network.
Wi-Fi Direct Password	Set the password to authenticate and validate users on a Wi-Fi connection.
Show Password on Setup Page Off On*	Show the Wi-Fi Direct Password on the Network Setup Page.
Preferred Channel Number 1–11 Auto*	Set the preferred channel of the Wi-Fi network.
Group Owner IP Address	Specify the IP address of the group owner.
Auto-Accept Push Button Requests Off* On	Accept requests to connect to the network automatically. **Note:** Accepting clients automatically is not secured.
Note: An asterisk (*) next to a value indicates the factory default setting.	

AirPrint

Note: This menu appears only in the Embedded Web Server.

Menu item	Description
All AirPrint Functions	Show the AirPrint status of the printer.
Enable AirPrint On* Off	Enable the AirPrint feature. **Note:** This menu item appears only if Internet Printing Protocol (IPP) or mDNS is disabled.
Note: An asterisk (*) next to a value indicates the factory default setting.	

Menu item	Description
Enable iBeacon On Off*	Enable the iBeacon feature.
Bonjour Name	Identify printer designation and location.
Organization Name	
Organizational Unit	
Printer Location	
Printer's Latitude	
Printer's Longitude	
Printer's Altitude	
More Options	
Note: An asterisk (*) next to a value indicates the factory default setting.	

Mobile Services Management

Menu item	Description
Enable IPP Print On* Off	Allow printing from mobile devices using Internet Printing Protocol (IPP).
Enable IPP Fax On* Off	Allow sending faxes using Internet Printing Protocol (IPP).
Enable IPP Over USB On* Off	Allow print or scan jobs using USB connection.
Enable Scan On* Off	Allow scanning using eSCL protocol.
Enable Mopria Discovery On* Off	Allow the printer to be detected by Mopria-enabled devices.
Note: An asterisk (*) next to a value indicates the factory default setting.	

Ethernet

Menu item	Description
Network Speed	Show the speed of the active network adapter.
Note: An asterisk (*) next to a value indicates the factory default setting.	

Menu item	Description
IPv4 Enable DHCP (On*) Set Static IP Address	Configure the IPv4 settings.
IPv6 Enable IPv6 (On*) Enable DHCPv6 (Off*) Stateless Address Autoconfiguration (On*) DNS Server Address Manually Assigned IPv6 Address Manually Assigned IPv6 Router Address Prefix (64*) All IPv6 Addresses All IPv6 Router Addresses	Configure the IPv6 settings.
Network Address UAA LAA	Specify the network address.
PCL SmartSwitch Off On*	Set the printer to switch automatically to PCL emulation when a print job requires it, regardless of the default printer language. **Note:** When this setting is disabled, the printer does not examine incoming data and uses the default printer language specified in the Setup menu.
PS SmartSwitch Off On*	Set the printer to switch automatically to PostScript emulation when a print job requires it, regardless of the default printer language. **Note:** When this setting is disabled, the printer does not examine incoming data and uses the default printer language specified in the Setup menu.
Job Buffering Off* On	Temporarily store print jobs in the hard disk or intelligent storage drive (ISD) before printing. **Note:** This menu item appears only when a hard disk or an ISD is installed.
Mac Binary PS Auto* On Off	Set the printer to process Macintosh binary PostScript print jobs. **Notes:** • Auto processes print jobs from computers using either Windows or Macintosh operating systems. • Off filters PostScript print jobs using the standard protocol.
Energy Efficient Ethernet On Off Auto*	Reduce power consumption when the printer does not receive data from the Ethernet network.
Note: An asterisk (*) next to a value indicates the factory default setting.	

TCP/IP

Note: This menu appears only in network printers or printers attached to print servers.

Menu item	Description
Set Hostname	Set the current TCP/IP host name.
Domain Name	Set the domain name.
Allow DHCP/BOOTP to update NTP server On* Off	Allow the DHCP and BOOTP clients to update the NTP settings of the printer.
Zero Configuration Name	Specify a service name for the zero configuration network.
Enable Auto IP Off On*	Assign an IP address automatically.
DNS Server Address	Specify the current Domain Name System (DNS) server address.
Backup DNS Server Address	Specify the backup DNS server addresses.
Backup DNS Server Address 2	
Backup DNS Server Address 3	
Domain Search Order	Specify a list of domain names to locate the printer and its resources that reside in different domains on the network.
Enable DDNS Off* On	Update the Dynamic DNS settings.
DDNS TTL	Specify the current DDNS settings.
Default TTL	
DDNS Refresh Time	
Enable mDNS Off On*	Update the multicast DNS settings.
WINS Server Address	Specify a server address for Windows Internet Name Service (WINS).
Enable BOOTP Off* On	Allow the BOOTP to assign a printer IP address.
Restricted Server List	Specify the IP addresses that are allowed to communicate with the printer over TCP/IP. **Notes:** • Use a comma to separate each IP address. • You can add up to 50 IP addresses.
Note: An asterisk (*) next to a value indicates the factory default setting.	

Menu item	Description
Restricted Server List Options Block All Ports* Block Printing Only Block Printing and HTTP Only	Specify the access option for IP addresses that are not in the list.
MTU 256–1500 Ethernet (1500*)	Specify a maximum transmission unit (MTU) parameter for the TCP connections.
Raw Print Port 1–65535 (9100*)	Specify a raw port number for printers connected on a network.
Outbound Traffic Maximum Speed Off* On	Set the maximum transfer rate of the printer. **Note:** When enabled, the option for this setting is 100–1000000 Kilobits/second.
TLS Support Enable TLSv1.0 (Off) Enable TLSv1.1 (Off*) Enable TLSv1.2 (On*)	Enable the Transport Layer Security protocol.
SSL Cipher List	Specify the cipher algorithms to use for the SSL or the TLS connections.
TLSv1.3 SSL Cipher List	
Note: An asterisk (*) next to a value indicates the factory default setting.	

SNMP

Note: This menu appears only in network printers or printers that are attached to print servers.

Menu item	Description
SNMP Versions 1 and 2c Enabled Off On* Allow SNMP Set Off On* Enable PPM MIB Off On* SNMP Community	Configure Simple Network Management Protocol (SNMP) versions 1 and 2c to install print drivers and applications.
Note: An asterisk (*) next to a value indicates the factory default setting.	

Menu item	Description
SNMP Version 3 Enabled Off On* Context Name Set Read/Write Credentials User Name Authentication Password Privacy Password Set Read-only Credentials User Name Authentication Password Privacy Password Authentication Hash MD5 SHA1* Minimum Authentication Level No Authentication, No Privacy Authentication, No Privacy Authentication, Privacy* Privacy Algorithm DES AES-128*	Configure SNMP version 3 to install and update the printer security.
Note: An asterisk (*) next to a value indicates the factory default setting.	

IPSec

Note: This menu appears only in network printers or printers that are attached to print servers.

Menu item	Description
Enable IPSec Off* On	Enable Internet Protocol Security (IPSec).
Base Configuration Default* Compatibility Secure	Set the IPSec base configuration. **Note:** This menu item appears only when Enable IPSec is set to On.
DH (Diffie-Hellman) Group Proposal modp2048 (14)* modp3072 (15) modp4096 (16) modp6144 (17)	Set the IPSec base configuration. **Note:** This menu item appears only when Base Configuration is set to Compatibility.
Note: An asterisk (*) next to a value indicates the factory default setting.	

Menu item	Description
Proposed Encryption Method 3DES AES*	Set the encryption method. **Note:** This menu item appears only when Base Configuration is set to Compatibility.
Proposed Authentication Method SHA1 SHA256* SHA512	Set the authentication method. **Note:** This menu item appears only when Base Configuration is set to Compatibility.
IKE SA Lifetime (Hours) 1 2 4 8 24*	Specify the IKE SA expiry period. **Note:** This menu item appears only when Base Configuration is set to Secure.
IPSec SA Lifetime (Hours) 1 2 4 8* 24	Specify the IPSec SA expiry period. **Note:** This menu item appears only when Base Configuration is set to Secure.
IPSec Device Certificate	Specify an IPSec certificate. **Note:** This menu item appears only when Enable IPSec is set to On.
Pre-Shared Key Authenticated Connections Host [x]	Configure the authenticated connections of the printer. **Note:** These menu items appear only when Enable IPSec is set to On.
Certificate Authenticated Connections Host [x] Address[/subnet]	
Note: An asterisk (*) next to a value indicates the factory default setting.	

802.1x

Note: This menu appears only in network printers or printers that are attached to print servers.

Menu item	Description
Active Off* On	Let the printer join networks that require authentication before allowing access.
Note: An asterisk (*) next to a value indicates the factory default setting.	

Menu item	Description
802.1x Authentication Device Login Name Device Login Password Validate Serve Certificate (On*) Enable Event Logging (Off*) 802.1x Device Certificate	Configure the settings for authenticating the 802.1x connection.
Authentication Mechanisms EAP - MD5 (On*) EAP - MSCHAPv2 (On*) LEAP (On*) PEAP (On*) EAP - TLS (On*) EAP - TTLS (On*) TTLS Authentication Method (MSCHAPv2*)	Configure the allowed authentication mechanisms for the 802.1x connection.
Note: An asterisk (*) next to a value indicates the factory default setting.	

LPD Configuration

Note: This menu appears only in network printers or printers that are attached to print servers.

Menu item	Description
LPD Timeout 0–65535 seconds (90*)	Set the time-out value to stop the Line Printer Daemon (LPD) server from waiting indefinitely for hung or invalid print jobs.
LPD Banner Page Off* On	Print a banner page for all LPD print jobs. **Note:** A banner page is the first page of a print job used as a separator of print jobs and to identify the originator of the print job request.
LPD Trailer Page Off* On	Print a trailer page for all LPD print jobs. **Note:** A trailer page is the last page of a print job.
LPD Carriage Return Conversion Off* On	Enable carriage return conversion. **Note:** Carriage return is a mechanism that commands the printer to move the position of the cursor to the first position on the same line.
Note: An asterisk (*) next to a value indicates the factory default setting.	

HTTP/FTP Settings

Menu item	Description
Proxy HTPP Proxy IP Address HTTP Default IP Port FTP Proxy IP Address FTP Default IP Port Authentication User Name Password Local Domains	Configure the HTTP and FTP server settings.
Other Settings Enable HTTP Server (On*)	Access the Embedded Web Server to monitor and manage the printer.
Other Settings Enable HTPPS (On*)	Enable Hypertext Transfer Protocol Secure (HTTPS) to encrypt data transferring to and from the print server.
Other Settings Force HTTPS Connections (Off*)	Force the printer to use HTTPS connections.
Other Settings Enable FTP/TFTP (On*)	Send files using FTP/TFTP.
Other Settings HTTPS Device Certificate (default*)	View the HTTP device certificate used on the printer.
Other Settings Timeout for HTTP/FTP Requests (30*)	Specify the amount of time before the server connection stops.
Other Settings Retries for HTTP/FTP Requests (3*)	Set the number of retries to connect to the HTTP/FTP server.
Note: An asterisk (*) next to a value indicates the factory default setting.	

ThinPrint

Menu item	Description
Enable ThinPrint Off* On	Print using ThinPrint.
Port Number 4000–4999 (4000*)	Set the port number for the ThinPrint server.
Bandwidth (bits/sec) 100–1000000 (0*)	Set the speed to transmit data in a ThinPrint environment.
Packet Size (kbytes) 0–64000 (0*)	Set the packet size for data transmission.
Note: An asterisk (*) next to a value indicates the factory default setting.	

USB

Menu item	Description
PCL SmartSwitch Off On*	Set the printer to switch to PCL emulation when a print job received through a USB port requires it, regardless of the default printer language. **Note:** When this setting is disabled, the printer does not examine incoming data and uses the default printer language specified in the Setup menu.
PS SmartSwitch Off On*	Set the printer to switch to PostScript emulation when a print job received through a USB port requires it, regardless of the default printer language. **Note:** When this setting is disabled, the printer does not examine incoming data and uses the default printer language specified in the Setup menu.
Job Buffering Off* On	Temporarily store print jobs in the hard disk or intelligent storage drive (ISD) before printing. **Note:** This menu item appears only when a hard disk or an ISD is installed.
Mac Binary PS Auto* On Off	Set the printer to process Macintosh binary PostScript print jobs. **Notes:** • Auto processes print jobs from computers using either Windows or Macintosh operating systems. • Off filters PostScript print jobs using the standard protocol.
Enable USB Port Off On*	Enable the front USB drive port.
Note: An asterisk (*) next to a value indicates the factory default setting.	

Restrict external network access

Menu item	Description
Restrict external network access Off* On	Restrict access to network sites.
External network address	Specify the network addresses with restricted access.
E-mail address for notification	Specify an e-mail address to send a notification of logged events.
Ping frequency 1–300 (10*)	Specify the network query interval in seconds.
Subject	Specify the subject and message of the notification e-mail.
Message	
Note: An asterisk (*) next to a value indicates the factory default setting.	

Security

Login Methods

Manage Permissions

Menu item	Description
Function Access Access Address Book in Apps Modify Address Book Manage Shortcuts Create Profiles Manage Bookmarks Flash Drive Print Flash Drive Scan Copy Function Color Dropout E-mail Function Fax Function FTP Function Release Held Faxes Held Jobs Access User Profiles Cancel Jobs at the Device Change Language Internet Printing Protocol (IPP) Initiate Scans Remotely B/W Print Network Folder - Scan	Control access to the printer functions.
Administrative Menus Security Menu Network/Ports Menu Paper Menu Reports Menu Function Configuration Menus Supplies Menu Option Card Menu SE Menu Device Menu	Control access to the printer menu settings.

Menu item	Description
Device Management Remote Management Firmware Updates Apps Configuration Operator Panel Lock Embedded Web Server Access Import / Export All Settings Out of Service Erase Cloud Services Enrollment	Control access to the printer management options.
Apps New Apps Scan Center Scan Center Custom [x]	Control access to printer applications.

Local Accounts

Menu item	Description
Manage Groups/Permissions Add Group Import Access Controls Function Access Administrative Menus Device Management All Users Import Access Controls Function Access Administrative Menus Device Management Admin	Control group or user access to the printer functions, applications, and security settings.
Add User User Name/Password User Name Password PIN	Create local accounts to manage access to the printer functions.
User Name/Password Accounts Add User	
User Name Accounts Add User	
Password Accounts Add User	
PIN Accounts Add User	

Schedule USB Devices

Menu item	Description
Schedules Add New Schedule	Schedule access to the front USB port.

Security Audit Log

Menu item	Description
Enable Audit Off* On	Record the events in the secure audit log and remote syslog.
Enable Remote Syslog Off* On	Send audit logs to a remote server.
Remote Syslog Server	Specify the remote syslog server.
Remote Syslog Port 1–65535 (514*)	Specify the remote syslog port.
Remote Syslog Method Normal UDP* Stunnel	Specify a syslog method to transmit logged events to a remote server.
Note: An asterisk (*) next to a value indicates the factory default setting.	

Menu item	Description
Remote Syslog Facility 0 - Kernel Messages 1 - User-Level Messages 2 - Mail System 3 - System Daemons 4 - Security/Authorization Messages* 5 - Messages Generated Internally by Syslogs 6 - Line Printer Subsystem 7 - Network News Subsystem 8 - UUCP Subsystem 9 - Clock Daemon 10 - Security/Authorization Messages 11 - FTP Daemon 12 - NTP Subsystem 13 - Log Audit 14 - Log Alert 15 - Clock Daemon 16 - Local Use 0 (local0) 17- Local Use 1 (local1) 18 - Local Use 2 (local2) 19 - Local Use 3 (local3) 20 - Local Use 4 (local4) 21 - Local Use 5 (local5) 22 - Local Use 6 (local6) 23 - Local Use 7 (local7)	Specify a facility code that the printer uses when sending log events to a remote server.
Severity of Events to Log 0 - Emergency 1 - Alert 2 - Critical 3 - Error 4 - Warning* 5 - Notice 6 - Informational 7 - Debug	Specify the priority level cutoff for logging messages and events.
Remote Syslog Non-Logged Events Off* On	Send all events, regardless of severity level, to the remote server.
Admin's E-mail Address	Send e-mail notification of logged events to the administrator.
Note: An asterisk (*) next to a value indicates the factory default setting.	

Menu item	Description
E-mail Log Cleared Alert Off* On	Send e-mail notification to the administrator when a log entry is deleted.
E-mail Log Wrapped Alert Off* On	Send e-mail notification to the administrator when the log becomes full and begins to overwrite the oldest entries.
Log Full Behavior Wrap Over Oldest Entries* E-mail Log Then Delete All Entries	Resolve log storage issues when the log fills its allotted memory.
E-mail % Full Alert Off* On	Send e-mail notification to the administrator when the log fills its allotted memory.
% Full Alert Level 1–99 (90*)	
E-mail Log Exported Alert Off* On	Send e-mail notification to the administrator when a log is exported.
E-mail Log Settings Changed Alert Off* On	Send e-mail notification to the administrator when Enable Audit is set.
Log Line Endings LF (\n)* CR (\r) CRLF (\r\n)	Specify how the log file terminates the end of each line.
Digitally Sign Exports Off* On	Add a digital signature to each exported log file.
Clear Log	Delete all audit logs.
Export Log Syslog (RFC 5424) Syslog (RFC 3164) CSV	Export a security log to a flash drive.
Note: An asterisk (*) next to a value indicates the factory default setting.	

Login Restrictions

Menu item	Description
Login failures 1–10 (3*)	Specify the number of failed login attempts before the user gets locked out.
Failure time frame 1–60 minutes (5*)	Specify the time frame between failed login attempts before the user gets locked out.
Lockout time 1–60 minutes (5*)	Specify the lockout duration.
Web Login Timeout 1–120 minutes (10*)	Specify the delay for a remote login before the user is logged off automatically.
Note: An asterisk (*) next to a value indicates the factory default setting.	

Confidential Print Setup

Menu item	Description
Max Invalid PIN 2–10	Set the limit for entering an invalid PIN. **Note:** When the limit is reached, the print jobs for that user name are deleted.
Confidential Job Expiration Off* 1 Hour 4 Hours 24 Hours 1 Week	Set an individual expiration time for each held job before it is automatically deleted from the hard disk or intelligent storage drive. **Note:** A held job is either Confidential, Repeat, Reserve, or Verify.
Repeat Job Expiration Off* 1 Hour 4 Hours 24 Hours 1 Week	Set the expiration time for a print job that you want to repeat.
Verify Job Expiration Off* 1 Hour 4 Hours 24 Hours 1 Week	Set the expiration time for printing a copy of a job for you to check its quality before printing the remaining copies.
Reserve Job Expiration Off* 1 Hour 4 Hours 24 Hours 1 Week	Set the expiration time for jobs that you want to store in the printer for printing later.
Note: An asterisk (*) next to a value indicates the factory default setting.	

Menu item	Description
Require All Jobs to be Held Off* On	Set the printer to hold all print jobs.
Keep duplicate documents Off* On	Set the printer to keep all documents with the same file name.
Note: An asterisk (*) next to a value indicates the factory default setting.	

Disk Encryption

Note: This menu item appears only when a hard disk or an intelligent storage drive is installed.

Menu item	Description
Hard Disk	Show the encryption status of the hard disk or intelligent storage drive.
Intelligent Storage Drive	

Erase Temporary Data Files

Menu item	Description
Stored in onboard memory Off* On	Delete all files stored on the printer memory.
Note: An asterisk (*) next to a value indicates the factory default setting.	

Solutions LDAP Settings

Menu item	Description
Follow LDAP Referrals Off* On	Search the different servers in the domain for the logged-in user account.
LDAP Certificate Verification Yes No*	Enable verification of LDAP certificates.

Miscellaneous

Menu item	Description
Protected Features Show* Hide	Show all the features that Function Access Control (FAC) protects regardless of the security permission that the user has. **Note:** Hide displays only FAC-protected features that the user has access.
Note: An asterisk (*) next to a value indicates the factory default setting.	

Menu item	Description
Print Permission Off* On	Let the user log in before printing.
Default Print Permission Login PIN* User Name/Password User Name	Set the default login for Print Permission.
Security Reset Jumper Enable “Guest” access* No Effect	Specify user access to the printer. **Notes:** • Enable "Guest" access allows for device recovery if the admin password is lost. If this issue occurs, then contact customer support. • No effect prevents using the security jumper for device recovery. • This menu item appears only when an actual security jumper hardware is installed.
Use Intelligent Storage Drive for User Data Off On*	Enable intelligent storage drive to store user data. **Note:** This menu item appears only when an intelligent storage drive is installed.
Minimum Password Length 0–32 (0*)	Specify the password length.
Enable Password/PIN Reveal Off* On	Show the password or personal identification number.
Note: An asterisk (*) next to a value indicates the factory default setting.	

Cloud Services

Cloud Services Enrollment

Menu item	Description
View More Information	View additional information on the usage of Lexmark Cloud Services.
Enable communication with Lexmark Cloud Services Off* On	Enable the printer to communicate with Lexmark Cloud Services.
View Current Status	View the connection status between the printer and Lexmark Cloud Services.
Note: An asterisk (*) next to a value indicates the factory default setting.	

Reports

Menu Settings Page

Menu item	Description
Menu Settings Page	Print a report that contains the printer menus.

Device

Device

Menu item	Description
Device Information	Print a report that contains information about the printer.
Device Statistics	Print a report about printer usage and supply status.
Profiles List	Print a list of profiles that are stored in the printer.
Asset Report	Print a diagnostic tool for print problems. **Note:** To avoid clipping the content, print the report on letter- or A4-size paper.

Print

Menu item	Description
Print Fonts PCL Fonts PS Fonts	Print samples and information about the fonts that are available in each printer language.
Print Demo Demo Page	Print a page that shows the printer capabilities and supported solutions.
Print Directory	Print the resources that are stored in the flash drive, hard disk, or intelligent storage drive (ISD). **Note:** This menu item appears only when a flash drive, a hard disk, or an ISD is installed.

Shortcuts

Menu item	Description
All Shortcuts	Print a report that lists the shortcuts that are stored in the printer.
Fax Shortcuts	
Copy Shortcuts	
E-mail Shortcuts	
FTP Shortcuts	
Network Folder Shortcuts	

Fax

Note: This menu appears only if Fax is configured, and Enable Job Log and Enable Call Log are set to On.

Menu item	Description
Fax Job Log	Print a report about the last 200 completed fax jobs.
Fax Call Log	Print a report about the last 100 attempted, received, and blocked calls.

Network

Menu item	Description
Network Setup Page	Print a page that shows the configured network and wireless settings on the printer. **Note:** This menu item appears only in network printers or printers connected to print servers.
Wi-Fi Direct Connected Clients	Print a page that shows the list of devices that are connected to the printer using Wi-Fi Direct. **Note:** This menu item appears only when Enable Wi-Fi Direct is set to On.

Troubleshooting

Menu item	Description
Print Quality Test Pages	Print sample pages to identify and correct print quality defects.
Cleaning the Scanner	Print instructions on how to clean the scanner.

Forms Merge

Note: This menu appears only when a hard disk or an intelligent storage drive is installed.

Menu item	Description
Merge Mode Print* Data Capture Disabled	Specify the mode of operation for Forms Merge.
Data Capture Target Flash*	Set the target destination where the captured data is forwarded. **Note:** This menu item appears only when Merge Mode is set to Data Capture.
Print Port and Filter Settings Network Port On* Off	Enable Forms Merge to process all data that are sent to the network port.
Print Port and Filter Settings Network Filter Disabled* NULL OFIS OFIS+NULL OFIS+AS400 AS400 PCL ZPL ZPLF	Specify the network filter for all data sent to the printer.
Print Port and Filter Settings USB Port On* Off	Enable Forms Merge to process all data that are sent to the USB port.
Print Port and Filter Settings USB Filter Disabled* NULL OFIS OFIS+NULL OFIS+AS400 AS400 PCL ZPL ZPLF	Specify the USB filter for all data sent to the printer.
Print Port and Filter Settings Local Port Timeout 1–100 (10*)	Specify the time-out value for Forms Merge jobs that are sent to the local port.
Miscellaneous Print All Forms	Print all form sets stored in the intelligent storage drive or hard disk of the printer.
Note: An asterisk (*) next to a value indicates the factory default setting.	

Menu item	Description
Miscellaneous Error Page Print On* Off	Enable printing of an error page when an error is encountered in a Forms Merge job.
Note: An asterisk (*) next to a value indicates the factory default setting.	

Printing the Menu Settings Page

From the home screen, touch **Settings** > **Reports** > **Menu Settings Page**.

Maintain the printer

Checking the status of parts and supplies

1 From the home screen, touch **Status/Supplies**.

2 Select the parts or supplies that you want to check.

Note: You can also access this setting by touching the top section of the home screen.

Configuring supply notifications

1 Open a web browser, and then type the printer IP address in the address field.

Notes:

- View the printer IP address on the printer home screen. The IP address appears as four sets of numbers separated by periods, such as 123.123.123.123.
- If you are using a proxy server, then temporarily disable it to load the web page correctly.

2 Click **Settings** > **Device** > **Notifications**.

3 From the Supplies menu, click **Custom Supply Notifications**.

4 Select a notification for each supply item.

5 Apply the changes.

Setting up e-mail alerts

Configure the printer to send e-mail alerts when supplies are low, when paper must be changed or added, or when there is a paper jam.

1 Open a web browser, and then type the printer IP address in the address field.

Notes:

- View the printer IP address on the printer home screen. The IP address appears as four sets of numbers separated by periods, such as 123.123.123.123.
- If you are using a proxy server, then temporarily disable it to load the web page correctly.

2 Click **Settings** > **Device** > **Notifications** > **E-mail Alert Setup**, and then configure the settings.

Note: For more information on SMTP settings, contact your e-mail provider.

3 Apply the changes.

4 Click **Setup E-mail Lists and Alerts**, and then configure the settings.

5 Apply the changes.

Viewing reports

1 From the home screen, touch **Settings** > **Reports**.

2 Select the report that you want to view.

Ordering parts and supplies

To order supplies in the U.S., contact Lexmark at 1-800-539-6275 for information about Lexmark authorized supplies dealers in your area. In other countries or regions, go to **www.lexmark.com** or contact the place where you purchased the printer.

Note: All life estimates for printer supplies assume printing on letter- or A4-size plain paper.

Warning—Potential Damage: Failure to maintain optimum printer performance, or to replace parts and supplies, may cause damage to your printer.

Using genuine Lexmark parts and supplies

Your Lexmark printer is designed to function best with genuine Lexmark parts and supplies. Use of third-party supplies or parts may affect the performance, reliability, or life of the printer and its imaging components. It can also affect warranty coverage. Damage caused by the use of third-party parts and supplies is not covered by the warranty. All life indicators are designed to function with Lexmark parts and supplies, and may deliver unpredictable results if third-party parts and supplies are used. Imaging component usage beyond the intended life may damage your Lexmark printer or its associated components.

Warning—Potential Damage: Supplies and parts without Return Program agreement terms may be reset and remanufactured. However, the manufacturer's warranty does not cover any damage caused by non-genuine supplies or parts. Resetting counters on the supply or part without proper remanufacturing can cause damage to your printer. After resetting the supply or part counter, your printer may display an error indicating the presence of the reset item.

Ordering a toner cartridge

Notes:

- The estimated cartridge yield is based on the ISO/IEC 19752 standard.
- Extremely low print coverage for extended periods of time may negatively affect actual yield.

Lexmark MX532 Return Program toner cartridges

Item	United States and Canada	European Economic Area, Iceland, Liechtenstein, and Norway	Rest of Asia Pacific	Latin America	Rest of Europe, Middle East, and Africa
Return Program toner cartridge	66S1000	66S2000	66S3000	66S4000	66S5000
High yield Return Program toner cartridge	66S1H00	66S2H00	66S3H00	66S4H00	66S5H00

Lexmark MX532 Regular toner cartridge

Item	Worldwide
High yield regular toner cartridge	66S0HA0

Lexmark MX632 Return Program toner cartridges

Item	United States and Canada	European Economic Area, Iceland, Liechtenstein, and Norway	Rest of Asia Pacific	Latin America	Rest of Europe, Middle East, and Africa
Return Program toner cartridge	66S1000	66S2000	66S3000	66S4000	66S5000
Extra high yield Return Program toner cartridge	66S1X00	66S2X00	66S3X00	66S4X00	66S5X00

Lexmark MX632 Regular toner cartridge

Item	Worldwide
Extra high yield regular toner cartridge	66S0XA0

Lexmark XM3350 Return Program toner cartridges

Item	United States and Canada	European Economic Area, Iceland, Liechtenstein, and Norway	Rest of the World
Extra high yield Return Program toner cartridge	24B7541	24B7542	24B7543

Ordering an imaging unit

Extremely low print coverage for extended periods of time may cause imaging unit parts to fail before the toner is exhausted.

Item	Part Number
Regular imaging unit	66S0ZA0

Replacing parts and supplies

Replacing the toner cartridge

1 Open door A.

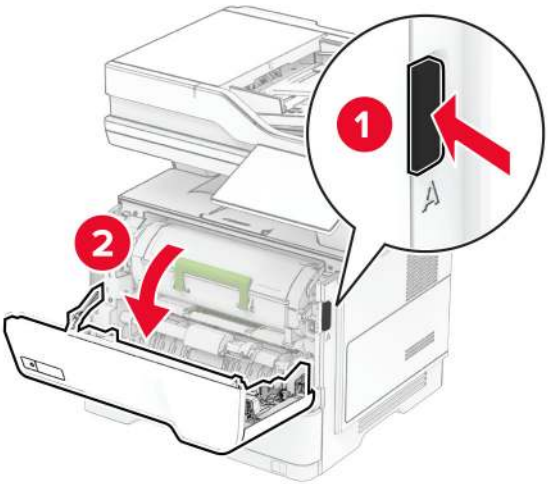

2 Remove the used toner cartridge.

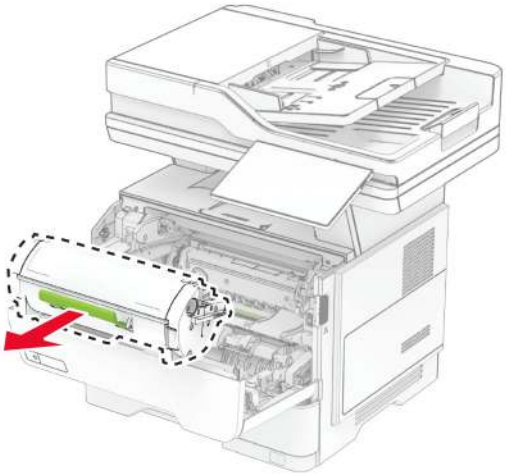

3 Unpack the new toner cartridge.

4 Shake the toner cartridge to redistribute the toner.

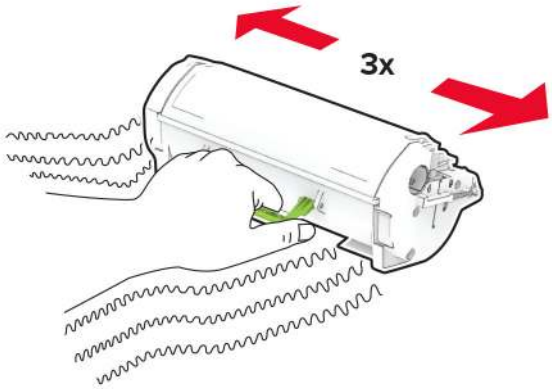

5 Insert the new toner cartridge.

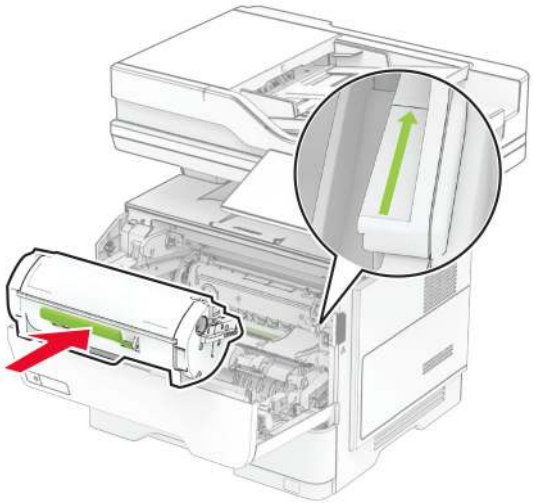

6 Close door A.

Replacing the imaging unit

1 Open door A.

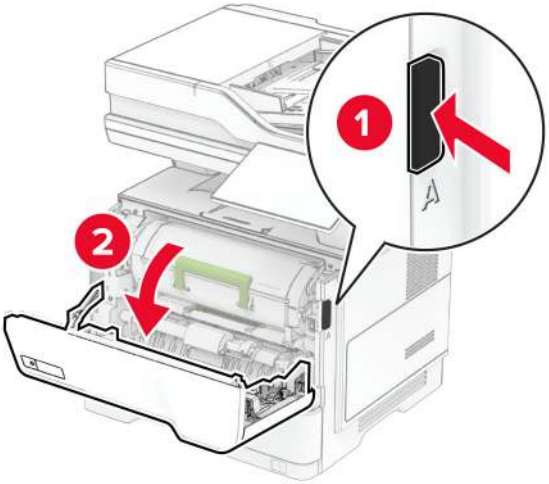

2 Remove the toner cartridge.

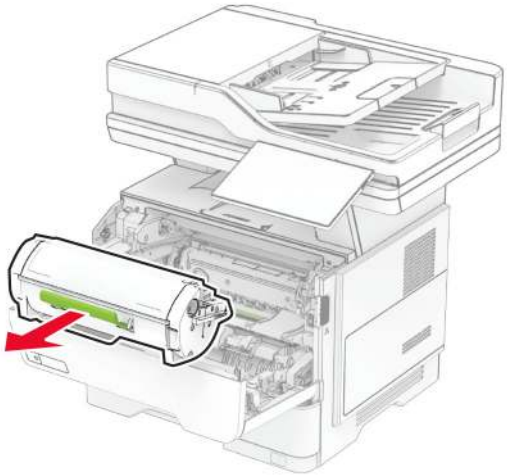

3 Remove the used imaging unit.

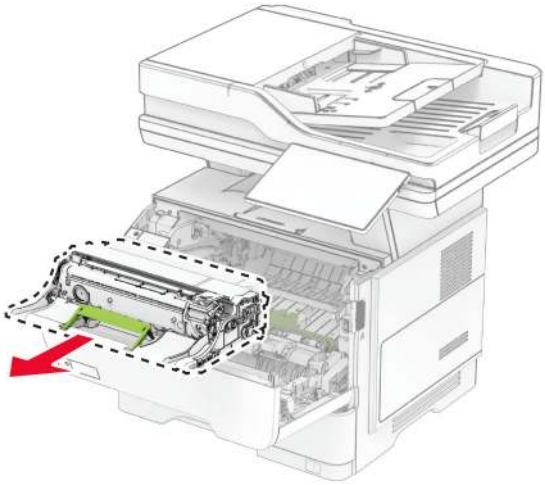

4 Unpack the new imaging unit.

5 Shake the imaging unit to redistribute the toner.

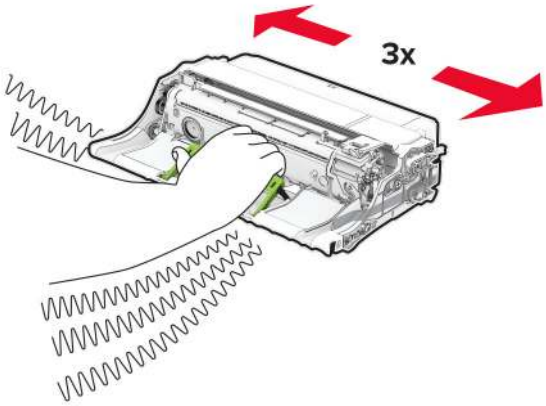

Warning—Potential Damage: Do not expose the imaging unit to direct light for more than 10 minutes. Extended exposure to light may cause print quality problems.

Warning—Potential Damage: Do not touch the photoconductor drum. Doing so may affect the quality of future print jobs.

6 Insert the new imaging unit.

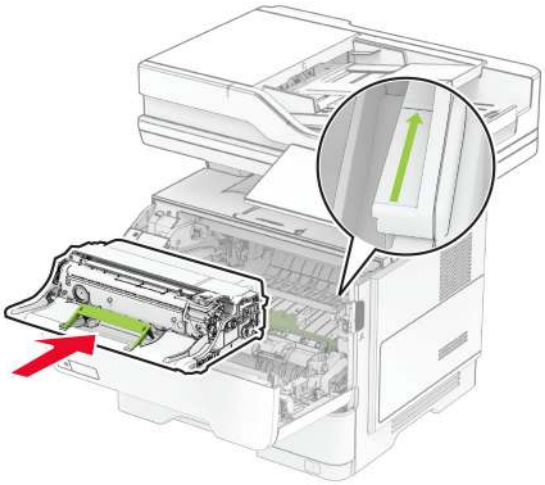

7 Insert the toner cartridge.

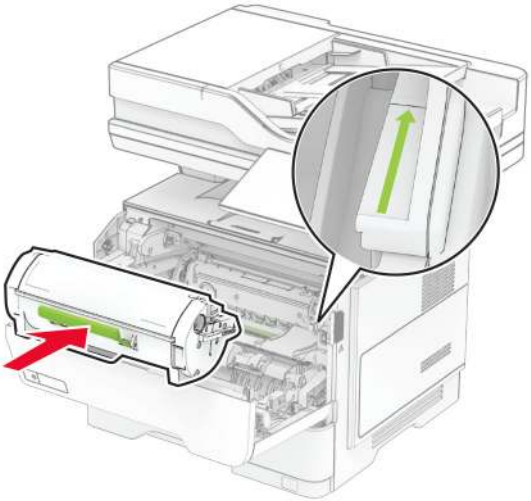

8 Close door A.

Replacing the staple refill

1 Open the convenience stapler access door.

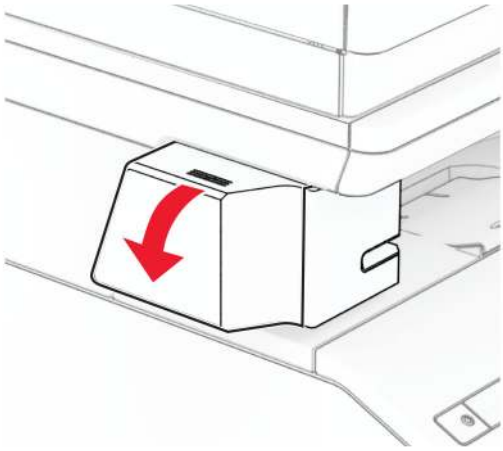

2 Remove the staple cartridge.

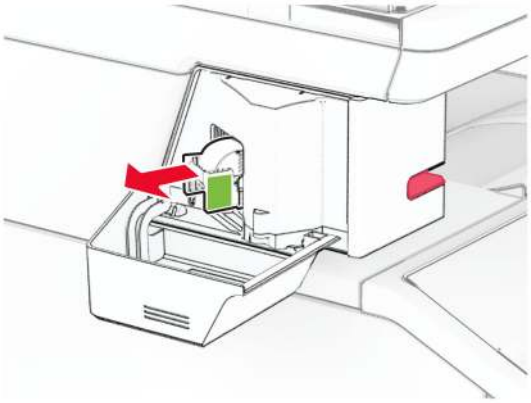

3 Remove the empty staple refill.

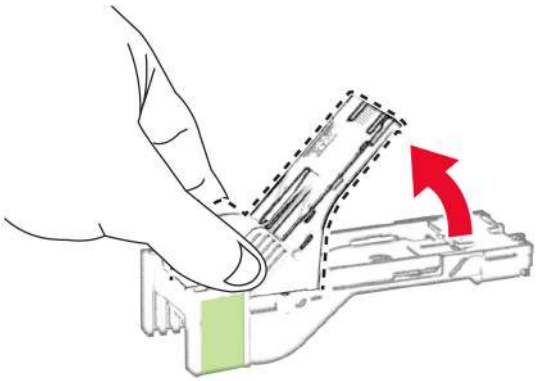

4 Insert the new staple refill until it clicks into place.

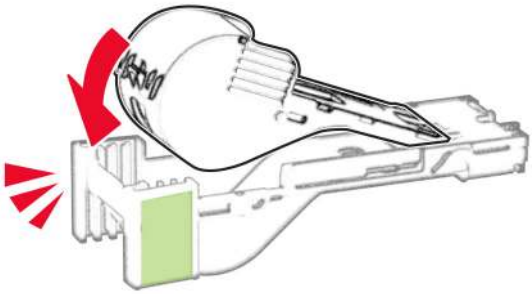

5 Insert the staple cartridge, and then close the convenience stapler access door.

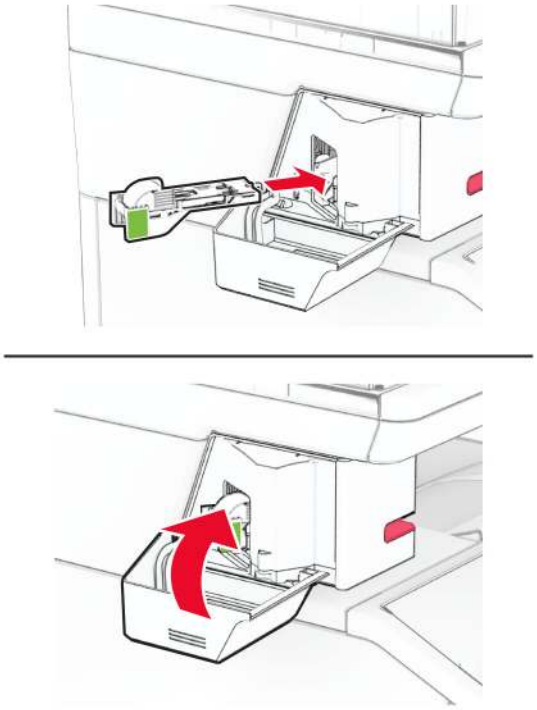

Note: Check the LED indicator status. The convenience stapler is ready to use when the blue light comes on.

Replacing the convenience stapler power supply

1 Turn off the printer.

2 Unplug the power cord from the electrical outlet, and then from the printer.

3 Unplug the power supply from the electrical outlet.

4 Remove the column cover and power supply cable.

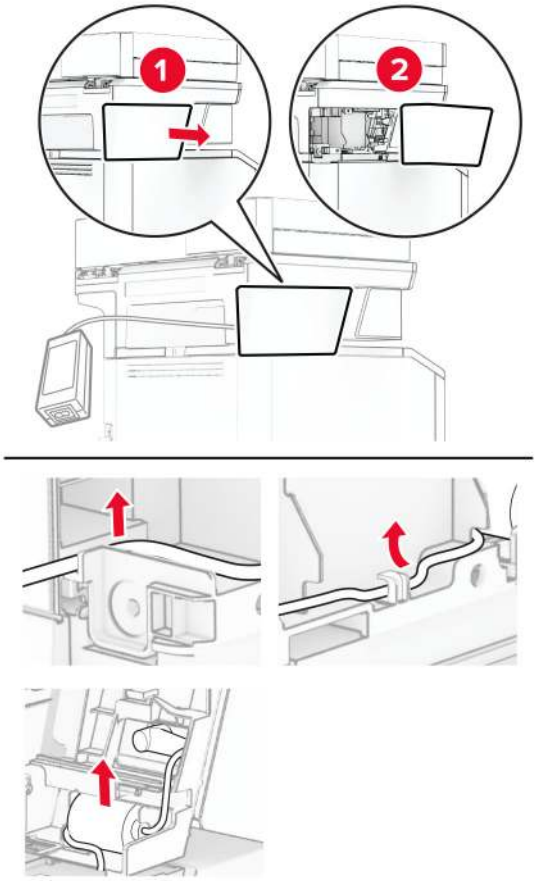

5 Remove the convenience stapler.

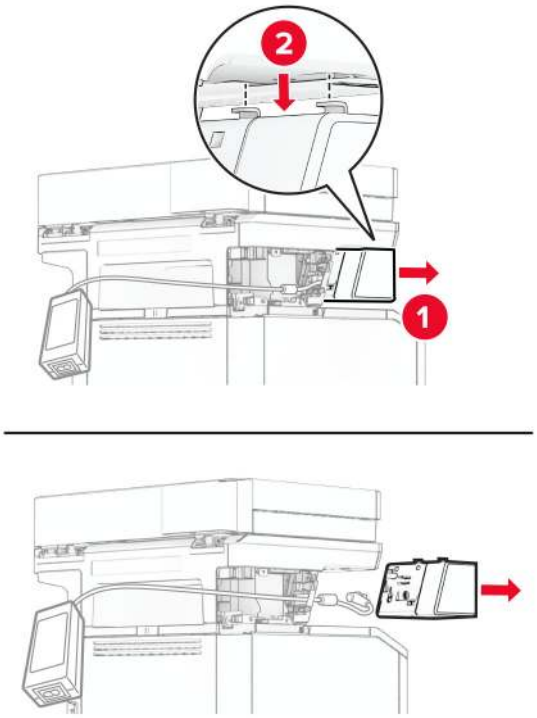

6 Remove the used power supply.

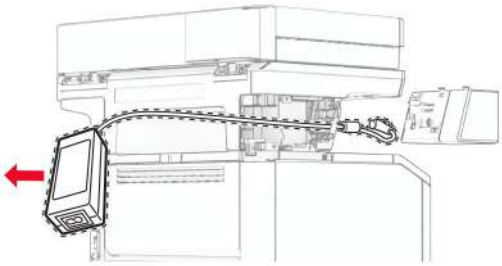

7 Unpack the new power supply.

8 Insert the new power supply through the printer, and then connect it to the convenience stapler.

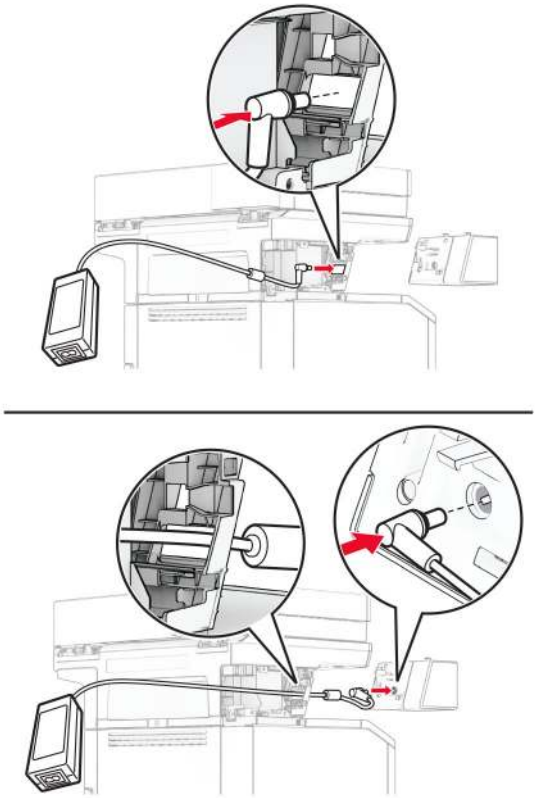

9 Install the convenience stapler.

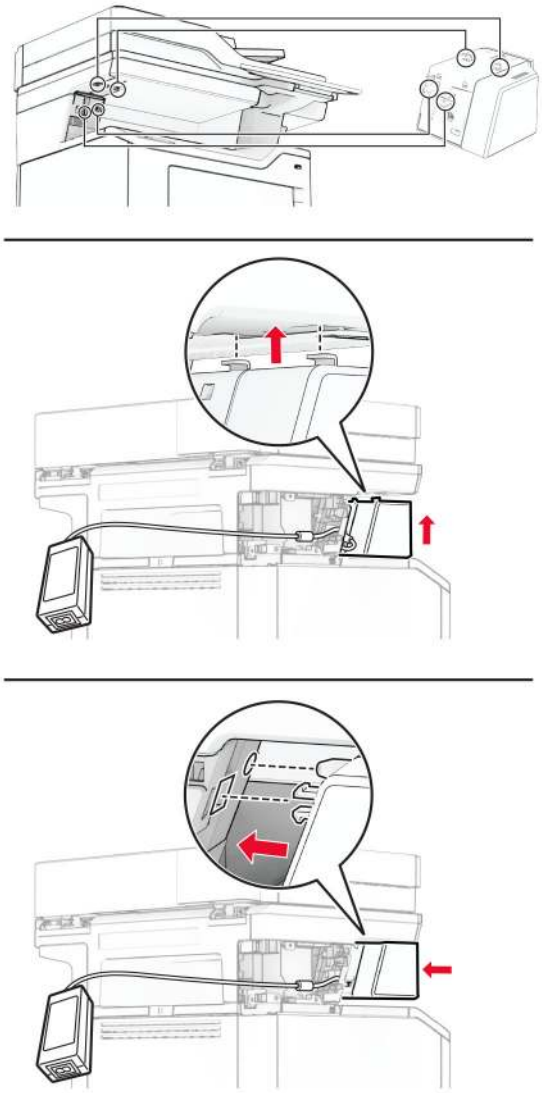

10 Position the power supply properly.

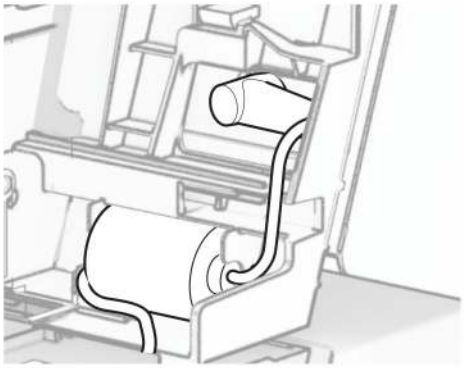

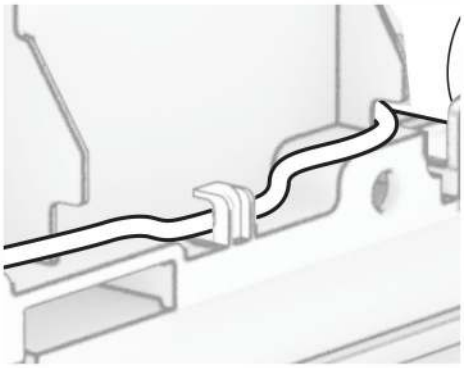

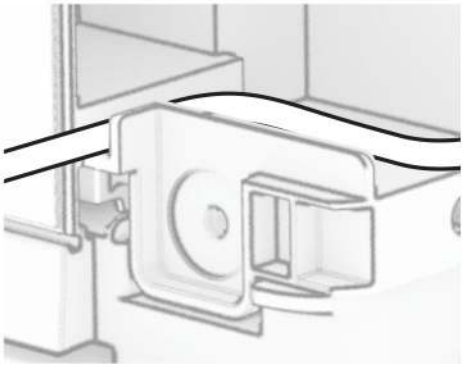

11 Attach the column cover.

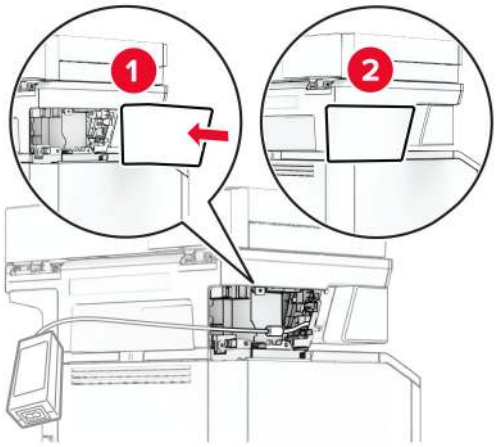

Note: Secure the power supply properly.

12 Connect one end of the stapler power cord to the power supply, and then the other end to the electrical outlet.

13 Connect one end of the printer power cord to the printer, and then the other end to the electrical outlet.

CAUTION—POTENTIAL INJURY: To avoid the risk of fire or electrical shock, connect the power cord to an appropriately rated and properly grounded electrical outlet that is near the product and easily accessible.

14 Turn on the printer.

Replacing MarkNet N8450 Wireless Print Server

CAUTION—SHOCK HAZARD: To avoid the risk of electrical shock, if you are accessing the controller board or installing optional hardware or memory devices sometime after setting up the printer, then turn the printer off, and unplug the power cord from the electrical outlet before continuing. If you have any other devices attached to the printer, then turn them off as well, and unplug any cables going into the printer.

Note: This task requires a flat-head screwdriver.

1. Turn off the printer.
2. Unplug the power cord from the electrical outlet, and then from the printer.
3. Open the controller board access cover.

   Warning—Potential Damage: Controller board electronic components are easily damaged by static electricity. Touch a metal surface on the printer before touching any controller board components or connectors.

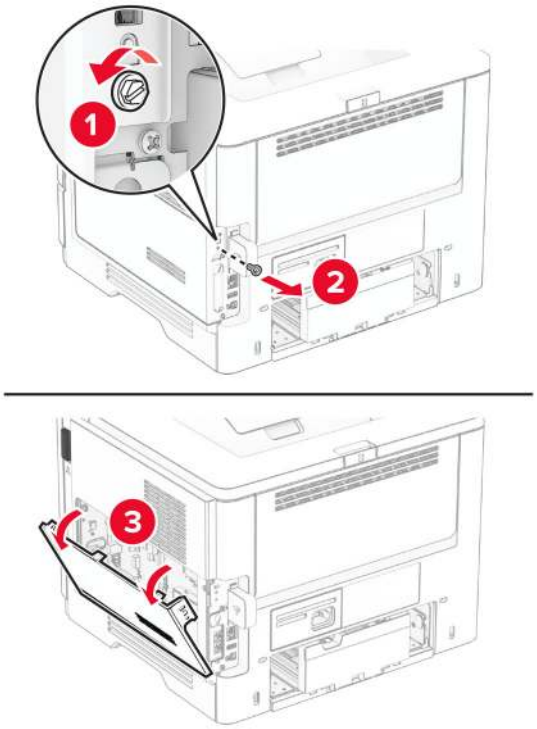

4 Remove the wireless print server cover.

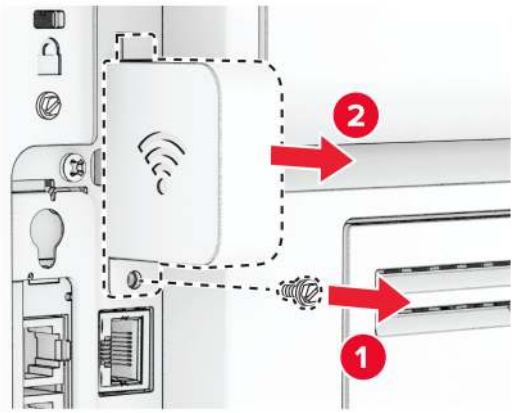

5 Remove the fax card.

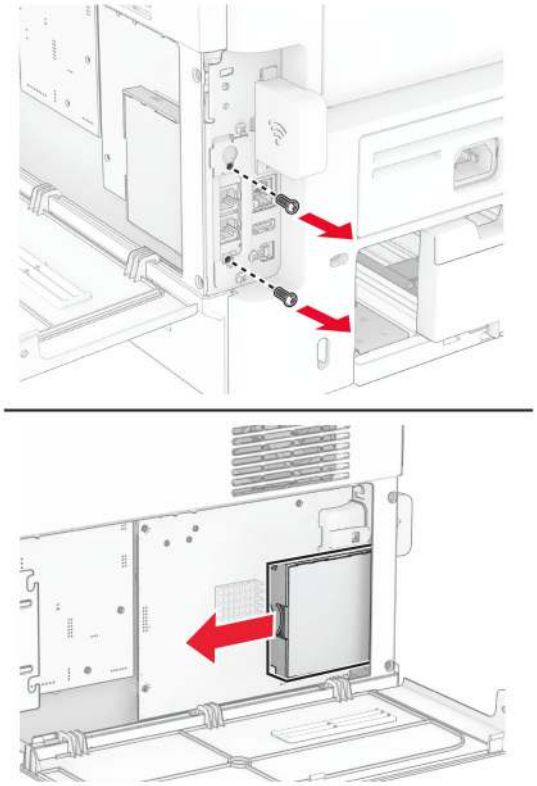

6 Remove the used wireless print server.

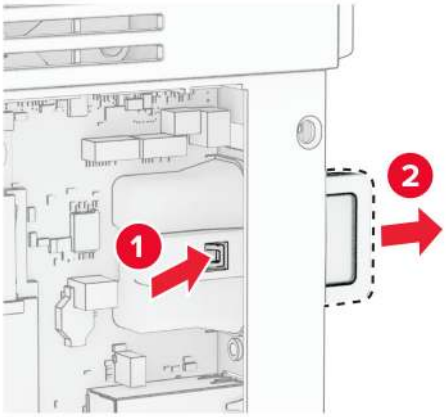

7 Unpack the new wireless print server.

8 Insert the new wireless print server until it *clicks* into place.

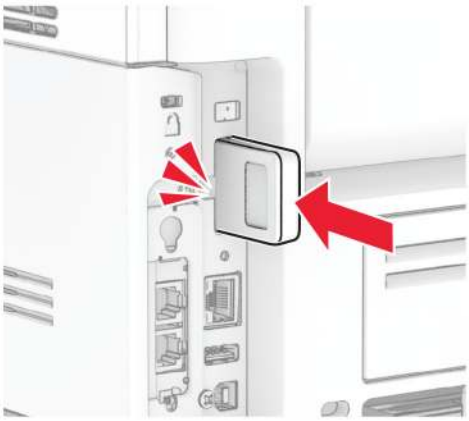

9 Insert the fax card, and then install the screws.

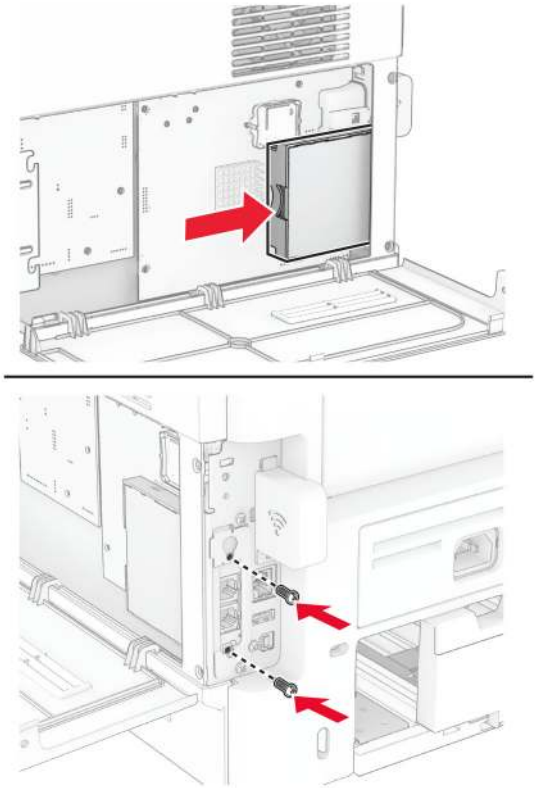

10 Attach the wireless print server cover, and then install the screw.

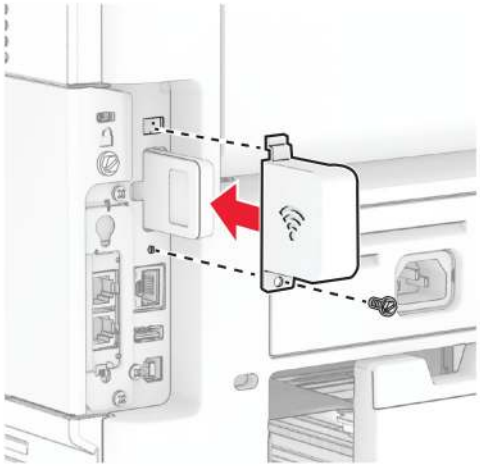

11 Close the controller board access cover, and then install the screw.

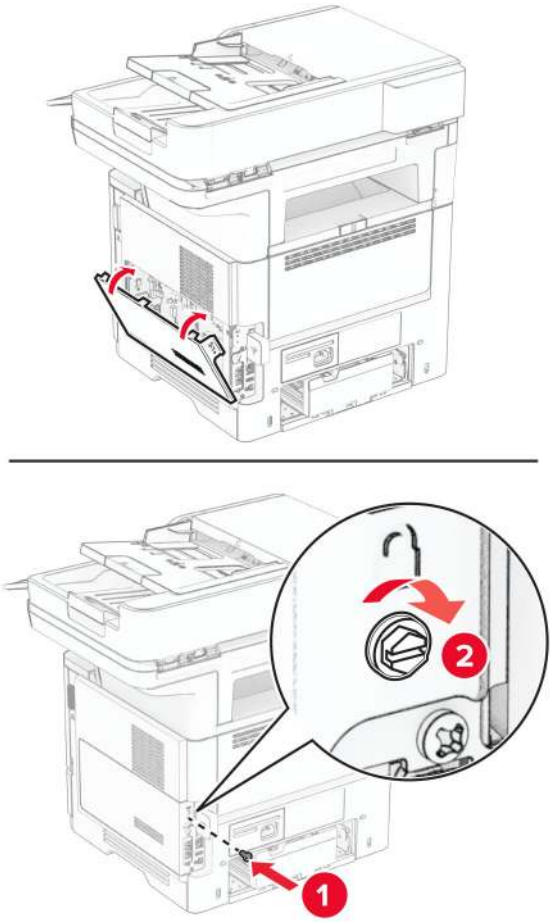

12 Connect the power cord to the printer, and then to the electrical outlet.

CAUTION—POTENTIAL INJURY: To avoid the risk of fire or electrical shock, connect the power cord to an appropriately rated and properly grounded electrical outlet that is near the product and easily accessible.

13 Turn on the printer.

Replacing the pick tires

1 Turn off the printer.

2 Unplug the power cord from the electrical outlet, and then from the printer.

3 Remove the tray.

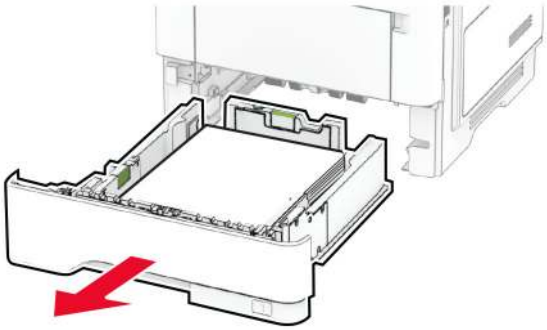

4 Remove the used pick tires.

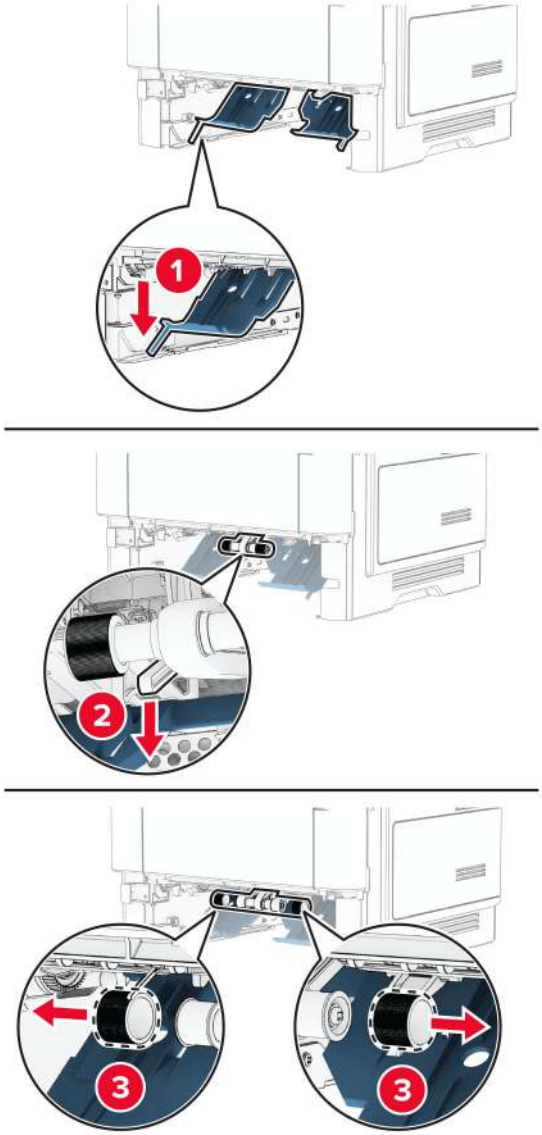

5 Unpack the new pick tires.

6 Insert the new pick tires.

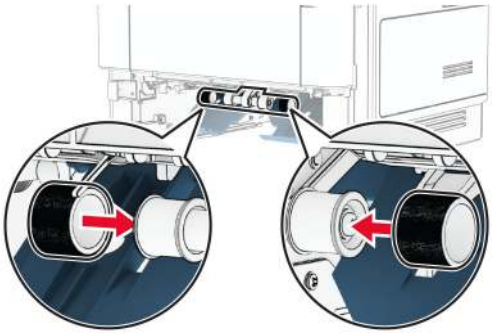

7 Insert the tray.

8 Connect the power cord to the printer, and then to the electrical outlet.

CAUTION—POTENTIAL INJURY: To avoid the risk of fire or electrical shock, connect the power cord to an appropriately rated and properly grounded electrical outlet that is near the product and easily accessible.

9 Turn on the printer.

Replacing the scanner glass pad

1 Open the scanner cover.

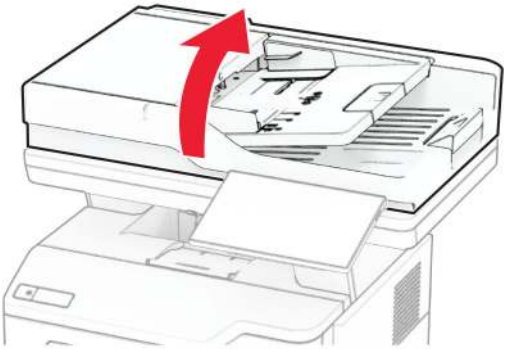

2 Remove the used scanner glass pad.

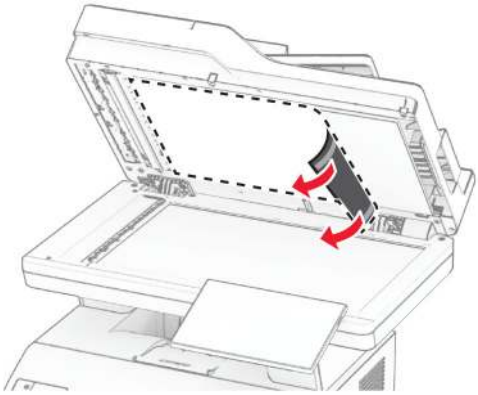

3 Unpack the new scanner glass pad.

4 Align the new scanner glass pad to the scanner glass.

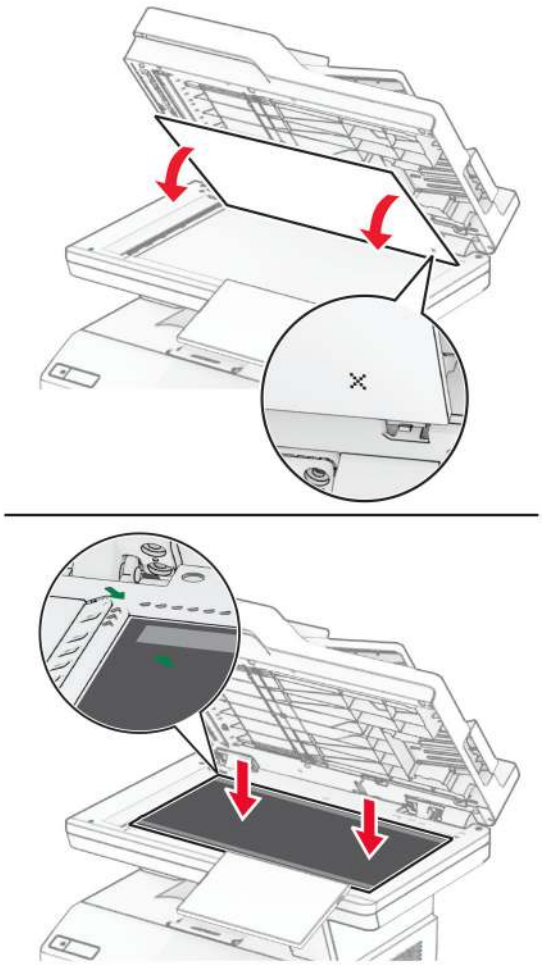

5 Close the scanner cover to attach the new scanner glass pad.

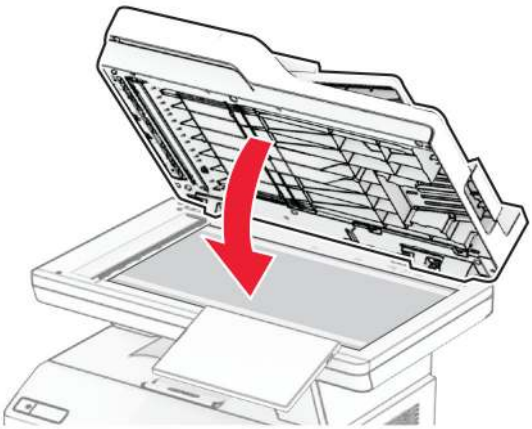

6 Open the scanner cover.

7 Apply pressure to the scanner glass pad to secure it.

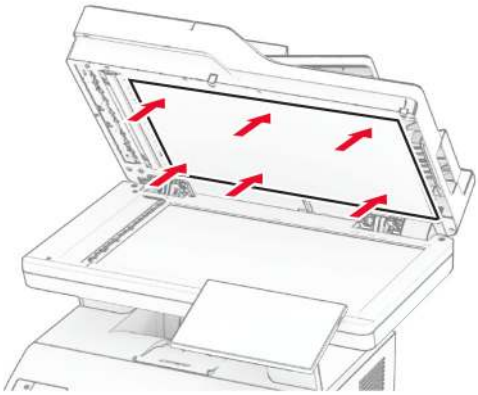

8 Close the scanner cover.

Replacing the ADF rollers

1 Open door C.

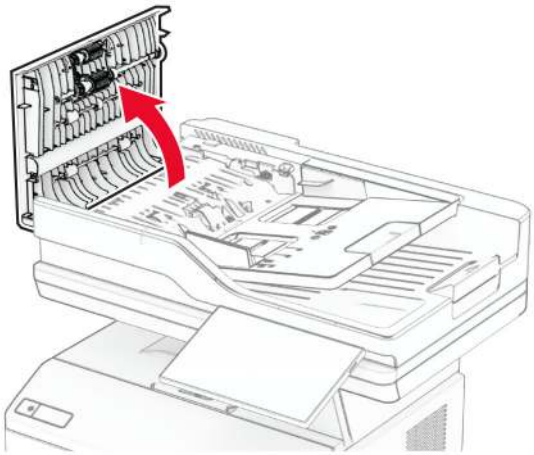

2 Remove the used ADF pick roller.

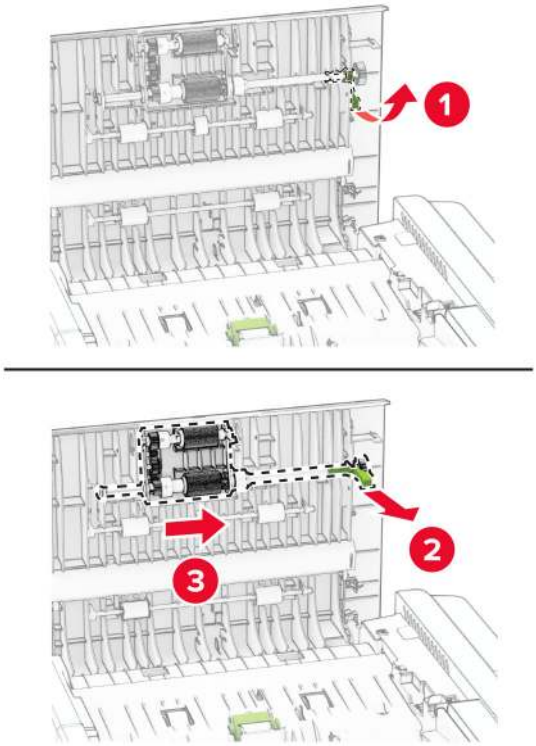

3 Remove the used ADF separator roller.

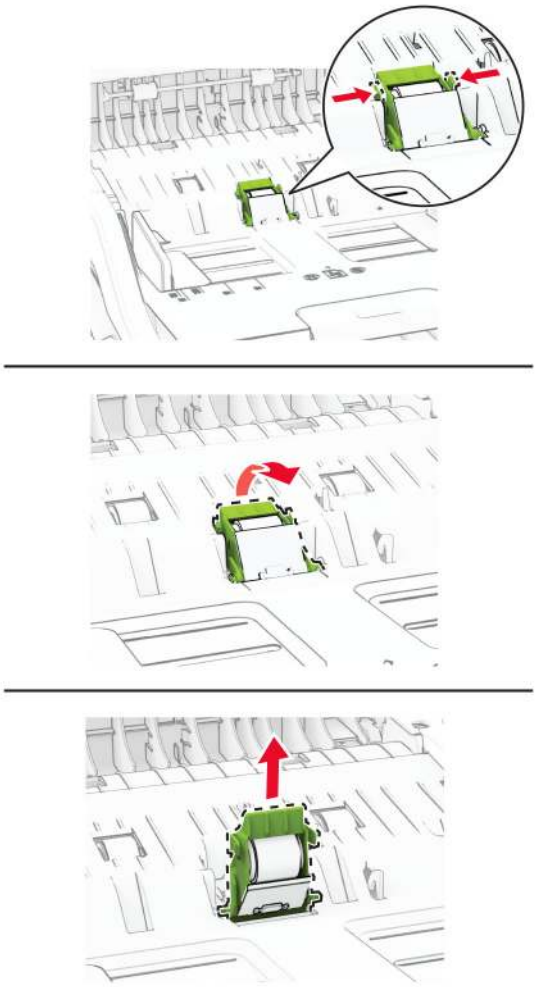

4 Unpack the new ADF pick roller and ADF separator roller.

5 Insert the new ADF separator roller until it *clicks* into place.

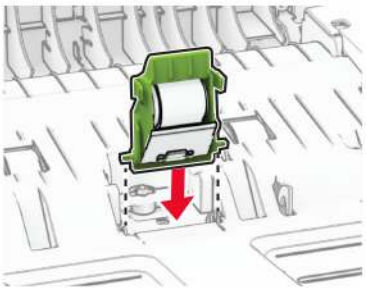

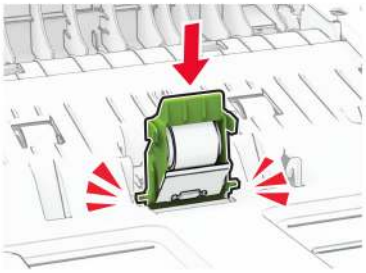

6 Insert the new ADF pick roller until it *clicks* into place.

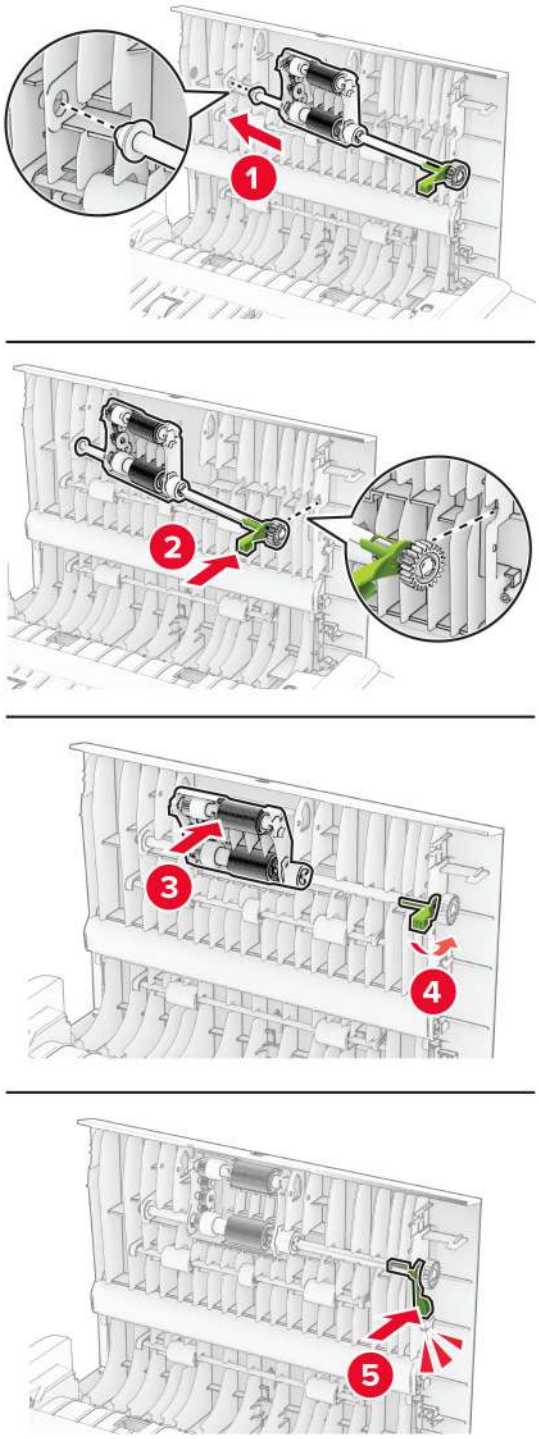

7 Close door C.

Resetting the supply usage counters

1. From the home screen, touch **Settings** > **Device** > **Maintenance** > **Configuration Menu** > **Supply Usage And Counters**.
2. Select the counter that you want to reset.

Warning—Potential Damage: Supplies and parts without Return Program agreement terms may be reset and remanufactured. However, the manufacturer's warranty does not cover any damage caused by non-genuine supplies or parts. Resetting counters on the supply or part without proper remanufacturing can cause damage to your printer. After resetting the supply or part counter, your printer may display an error indicating the presence of the reset item.

Cleaning printer parts

Cleaning the printer

CAUTION—SHOCK HAZARD: To avoid the risk of electrical shock when cleaning the exterior of the printer, unplug the power cord from the electrical outlet and disconnect all cables from the printer before proceeding.

Notes:

- Perform this task after every few months.
- Damage to the printer caused by improper handling is not covered by the printer warranty.

1. Turn off the printer, and then unplug the power cord from the electrical outlet.
2. Remove paper from the standard bin and multipurpose feeder.
3. Remove any dust, lint, and pieces of paper around the printer using a soft brush or vacuum.
4. Wipe the outside of the printer with a damp, soft, lint-free cloth.

   Notes:

   - Do not use household cleaners or detergents, as they may damage the finish of the printer.
   - Make sure that all areas of the printer are dry after cleaning.
5. Connect the power cord to the electrical outlet, and then turn on the printer.

   CAUTION—POTENTIAL INJURY: To avoid the risk of fire or electrical shock, connect the power cord to an appropriately rated and properly grounded electrical outlet that is near the product and easily accessible.

Cleaning the touch screen

CAUTION—SHOCK HAZARD: To avoid the risk of electric shock when cleaning the exterior of the printer, unplug the power cord from the electrical outlet and disconnect all cables from the printer before proceeding.

1. Turn off the printer, and then unplug the power cord from the electrical outlet.
2. Using a damp, soft, lint-free cloth, wipe the touch screen.

Notes:

- Do not use household cleaners or detergents, as they may damage the touch screen.
- Make sure that the touch screen is dry after cleaning.

3 Connect the power cord to the electrical outlet, and then turn on the printer.

CAUTION—POTENTIAL INJURY: To avoid the risk of fire or electrical shock, connect the power cord to an appropriately rated and properly grounded electrical outlet that is near the product and easily accessible.

Cleaning the scanner

1 Open the scanner cover.

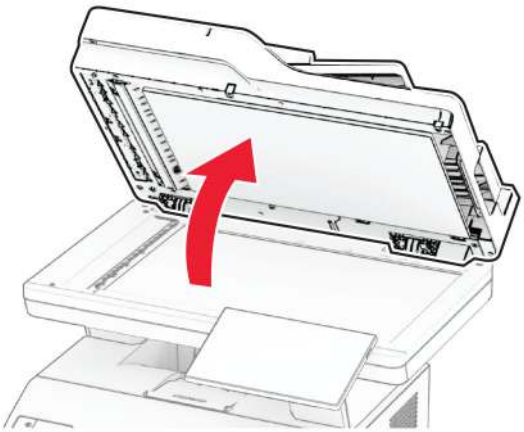

2 Using a damp, soft, lint-free cloth, wipe the following areas:

- ADF glass pad

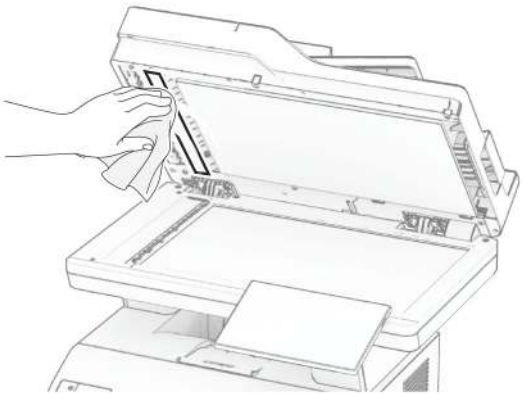

- Scanner glass pad

- ADF glass

- Scanner glass

3 Close the scanner cover.

4 Open door C.

5 Using a damp, soft, lint-free cloth, wipe the following areas:

- ADF glass pad in door C

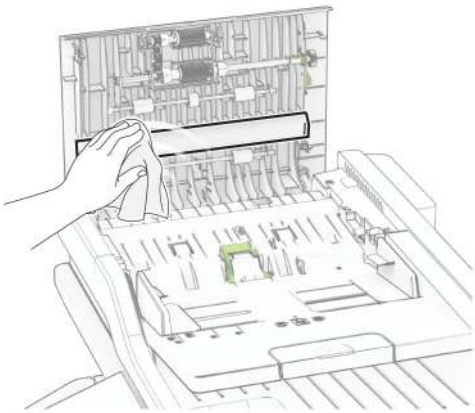

- ADF glass in door C

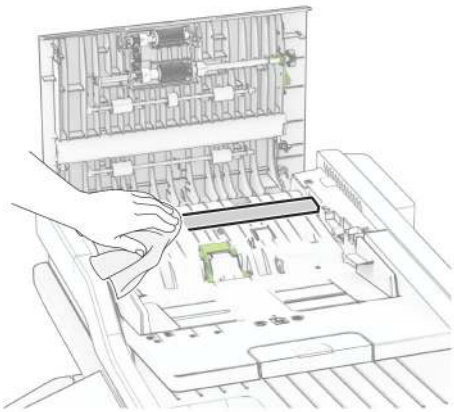

6 Close door C.

Cleaning the ADF rollers

1 Open door C.

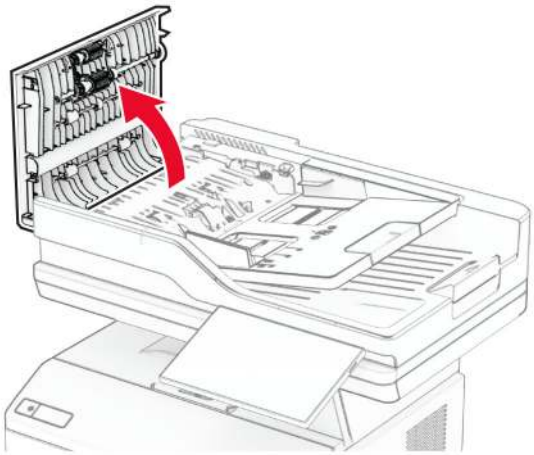

2 Remove the ADF pick roller.

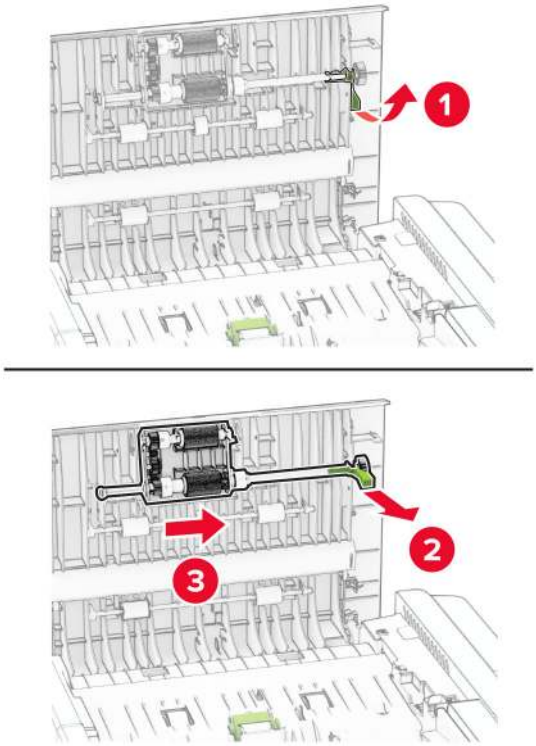

3 Remove the ADF separator roller.

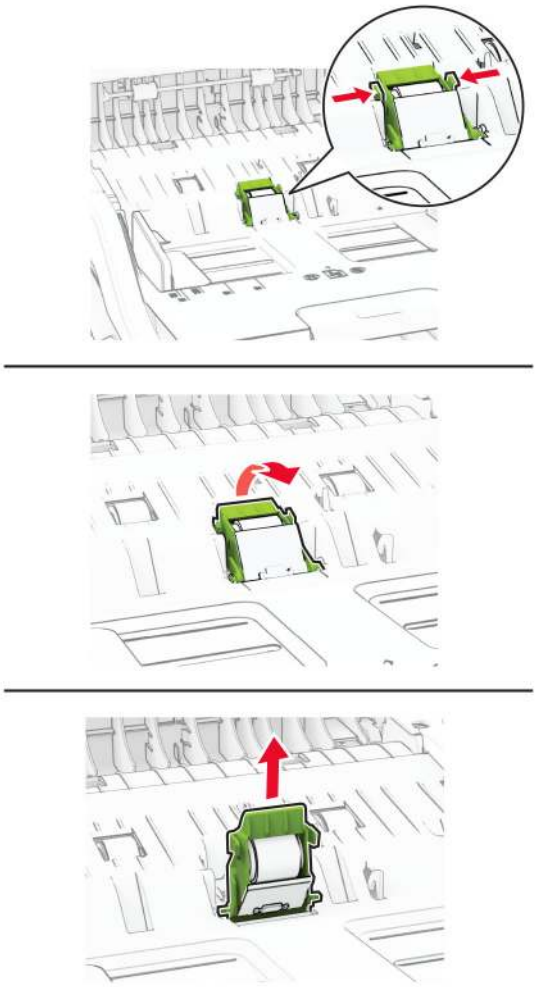

4 Apply isopropyl alcohol to a soft, lint-free cloth, and then wipe the ADF pick roller and ADF separator roller.

5 Insert the ADF separator roller until it *clicks* into place.

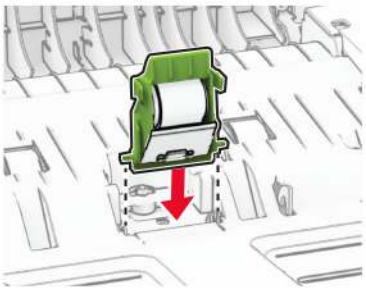

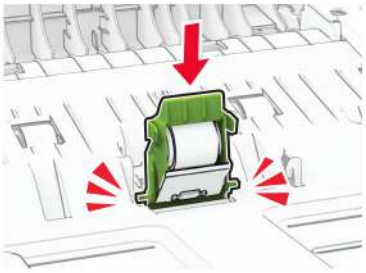

6 Insert the ADF pick roller until it *clicks* into place.

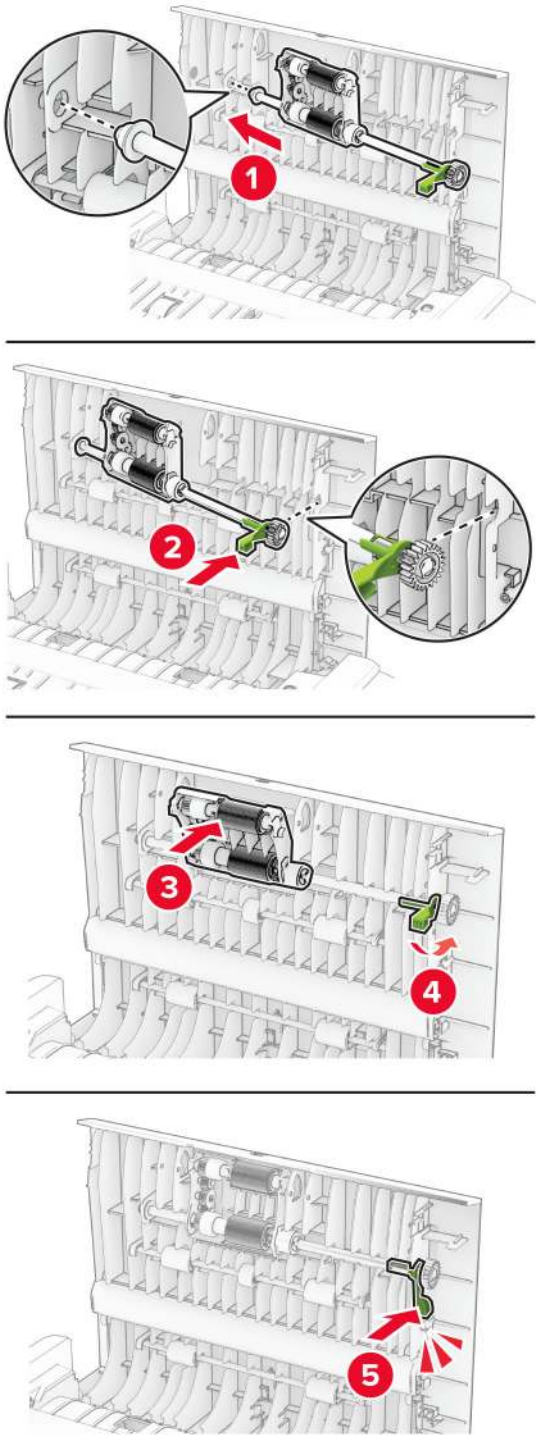

7 Close door C.

Saving energy and paper

Configuring the power save mode settings

Sleep mode

1 From the home screen, touch **Settings** > **Device** > **Power Management** > **Timeouts** > **Sleep Mode**.

2 Specify the amount of time that the printer stays idle before it enters Sleep Mode.

Hibernate mode

1 From the home screen, touch **Settings** > **Device** > **Power Management** > **Timeouts** > **Hibernate Timeout**.

2 Select the amount of time that the printer stays idle before it enters Hibernate mode.

Notes:

- For Hibernate Timeout to work, set Hibernate Timeout on Connection to Hibernate.
- The Embedded Web Server is disabled when the printer is in Hibernate mode.

Adjusting the brightness of the display

1 From the home screen, touch **Settings** > **Device** > **Preferences**.

2 In the Screen Brightness menu, adjust the setting.

Conserving supplies

- Print on both sides of the paper.

  Note: Two-sided printing is the default setting in the print driver.
- Print multiple pages on a single sheet of paper.
- Use the preview feature to see how the document looks like before printing it.
- Print one copy of the document to check its content and format for accuracy.

Moving the printer to another location

Moving the printer to another location

CAUTION—POTENTIAL INJURY: If the printer weight is greater than 20 kg (44 lb), then it may require two or more people to lift it safely.

CAUTION—POTENTIAL INJURY: To avoid the risk of fire or electrical shock, use only the power cord provided with this product or the manufacturer's authorized replacement.

CAUTION—POTENTIAL INJURY: When moving the printer, follow these guidelines to avoid personal injury or printer damage:

- Make sure that all doors and trays are closed.
- Turn off the printer, and then unplug the power cord from the electrical outlet.
- Disconnect all cords and cables from the printer.
- If the printer has separate floor-standing optional trays or output options attached to it, then disconnect them before moving the printer.
- If the printer has a caster base, then carefully roll it to the new location. Use caution when passing over thresholds and breaks in flooring.
- If the printer does not have a caster base but is configured with optional trays or output options, then remove the output options and lift the printer off the trays. Do not try to lift the printer and any options at the same time.
- Always use the handholds on the printer to lift it.
- Any cart used to move the printer must have a surface able to support the full footprint of the printer.
- Any cart used to move the hardware options must have a surface able to support the dimensions of the options.
- Keep the printer in an upright position.
- Avoid severe jarring movements.
- Make sure that your fingers are not under the printer when you set it down.
- Make sure that there is adequate clearance around the printer.

Note: Damage to the printer caused by improper moving is not covered by the printer warranty.

Shipping the printer

For shipping instructions, go to **https://support.lexmark.com** or contact customer support.

Troubleshoot a problem

Print quality problems

Find the image that resembles the print quality problem you are having, and then click the link below it to read problem-solving steps.

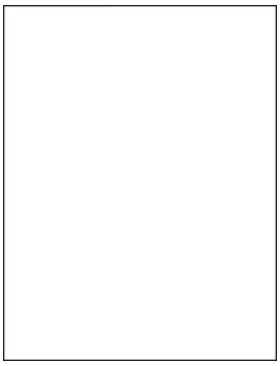

“Blank or white pages” on page 226

“Dark print” on page 227

“Fine lines are not printed correctly” on page 229

“Folded or wrinkled paper” on page 230

“Gray background” on page 231

“Horizontal light bands” on page 241

“Incorrect margins” on page 232

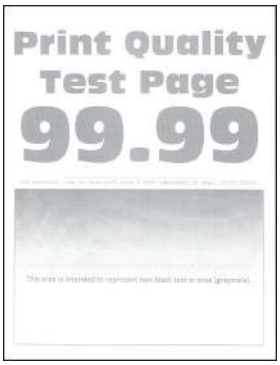

“Light print” on page 233

“Mottled print and dots” on page 235

“Paper curl” on page 236

“Print crooked or skewed” on page 238

“Repeating defects” on page 247

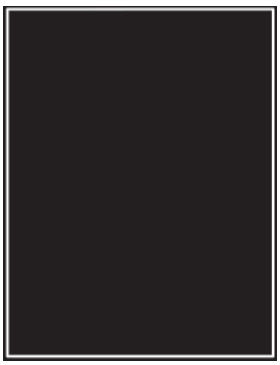

“Solid black pages” on page 238

“Text or images cut off” on page 239

“Toner easily rubs off” on page 240

“Vertical dark bands” on page 243

“Vertical dark lines or streaks” on page 245

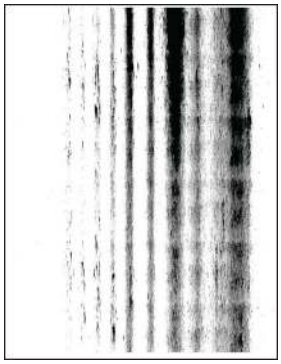

“Vertical dark streaks with print missing” on page 246

“Vertical light bands” on page 242

“Vertical white lines” on page 243

Printer error codes

Printer error codes

Error codes	Error message	Solution
8.01	Close front door A.	Keep all doors closed unless performing maintenance.
9.00	Printer had to restart. Last job may be incomplete.	Touch **Continue** to clear the message and continue printing.
11.11, 11.21, 11.31, 11.41	**Load <source/> with <type/> <size/>.**	Open the indicated tray, and then load paper. For more information, see “Loading trays” on page 45.
11.12, 11.22, 11.32, 11.42	**Load <source/> with <type/> <size/> <orientation/>.**	
11.91	**Load multipurpose feeder with <type/> <size/>.**	Open the multipurpose feeder, and then load paper. For more information, see “Loading the multipurpose feeder” on page 47.
11.92	**Load multipurpose feeder with <type/> <size/> <orientation/>.**	

Error codes	Error message	Solution
12.11, 12.21, 12.31, 12.41	**Change <source/> to <type/> <size/>.**	Open the indicated tray, remove paper, and then load the correct paper type and size. For more information, see "Loading trays" on page 45.
12.12, 12.22, 12.32, 12.42	**Change <source/> to <type/> <size/> <orientation/>.**	
12.91	**Change multipurpose feeder to <type/> <size/>.**	Remove paper, and then load the correct paper type and size. For more information, see "Loading the multipurpose feeder" on page 47.
12.92	**Change multipurpose feeder to <type/> <size/> <orientation/>.**	
29.08	Remove packing material.	**1** Open door A. **2** Remove the toner cartridge. **3** Remove the imaging unit. **4** Remove the packing material. **Warning—Potential Damage:** Do not expose the photoconductor unit to direct light for more than 10 minutes. Extended exposure to light may cause print quality problems. **Warning—Potential Damage:** Do not touch the shiny photoconductor drum under the imaging unit. Doing so may affect the quality of future print jobs. **5** Insert the imaging unit. **6** Insert the toner cartridge. **7** Close door A. **8** Remove all trays, and then remove all packing material. **9** Insert all trays.
31.40z	Reinstall missing or unresponsive cartridge.	**1** Open door A. **2** Remove the toner cartridge. **3** Insert the toner cartridge. **4** Close door A.

Error codes	Error message	Solution
31.60z	Reinstall missing or unresponsive imaging unit.	**1** Open door A. **2** Remove the toner cartridge. **3** Remove the imaging unit. **Warning—Potential Damage:** Do not expose the photoconductor unit to direct light for more than 10 minutes. Extended exposure to light may cause print quality problems. **Warning—Potential Damage:** Do not touch the shiny photoconductor drum under the imaging unit. Doing so may affect the quality of future print jobs. **4** Insert the imaging unit. **5** Insert the toner cartridge. **6** Close door A.
32.40z	Replace unsupported cartridge.	See "Replacing the toner cartridge" on page 183.
32.60z	Replace unsupported imaging unit.	See "Replacing the imaging unit" on page 185.
33.40	Non-Lexmark cartridge, see User's Guide.	See "Non-Lexmark supply" on page 269.
33.60	Non-Lexmark imaging unit, see User's Guide.	
37.1	Insufficient memory to collate job.	Try one or more of the following: • Touch **Continue** to print the part of the job that is stored and to begin collating the rest of the print job. • Cancel the current print job.
37.3	Insufficient memory, some held jobs were deleted.	Touch **Continue** to clear the message and continue printing.
38.1	Memory full.	Try one or more of the following: • Touch **Cancel job** to clear the message. • Print the document in several parts, or send it to another printer. • Install more printer memory.

Error codes	Error message	Solution
39.1	Complex page, some data may not have printed.	Try one or more of the following: • Touch **Continue** to clear the message and continue printing. • Cancel the current print job. • Install more printer memory. • Reduce the complexity and size of the print job before sending it to print again. – Reduce the number of pages in the print job. – Reduce the number and size of any downloaded fonts. – Delete any unnecessary fonts or macros from the print job. – Reduce the number of graphics in the print job.
42.yy	Replace cartridge, printer region mismatch.	See "Replace cartridge, printer region mismatch" on page 268.
43.40z	Reinstall cartridge.	See "Replacing the toner cartridge" on page 183.
44.40	Replace cartridge, printer mismatch.	See "Replace cartridge, printer region mismatch" on page 268.
55.1	Error reading USB drive. Remove USB.	Remove the flash drive to continue.
55.2	Error reading USB hub. Remove hub.	Remove the USB hub to continue.
58	**Too many trays attached. Only <x/> tray/s can be supported.**	**1** Turn off the printer, and then unplug the power cord from the electrical outlet. **2** Remove one or more trays. **3** Connect the power cord to the electrical outlet, and then turn on the printer. **CAUTION—POTENTIAL INJURY:** To avoid the risk of fire or electrical shock, connect the power cord to an appropriately rated and properly grounded electrical outlet that is near the product and easily accessible.

Error codes	Error message	Solution
59	**Incompatible tray [x].**	**1** Turn off the printer, and then unplug the power cord from the electrical outlet. **2** Remove the indicated tray. **3** Connect the power cord to the electrical outlet, and then turn on the printer. **CAUTION—POTENTIAL INJURY:** To avoid the risk of fire or electrical shock, connect the power cord to an appropriately rated and properly grounded electrical outlet that is near the product and easily accessible.
61	Remove defective disk.	Replace the defective storage drive.
62	Disk full.	Try one or more of the following: • Touch **Continue** to clear the message. • Delete fonts, macros, and other data stored in the intelligent storage drive. • Install an intelligent storage drive.
63	Format the disk.	Formatting now wipes all information from the storage drive. To format the disk, do the following: **1** From the home screen, touch **Settings** > **Device** > **Maintenance** > **Out of Service Erase**. **2** Touch **Sanitize all information on hard disk** or **Erase Intelligent Storage Drive**, and then touch **ERASE**.
71.01	Fax Station Name not set up. Contact system administrator.	See "Setting up the fax function using analog fax" on page 30.
71.02	Fax Station Number not set up. Contact system administrator.	
71.03	No analog phone line connected to modem, fax is disabled.	Check the connection and the line for a signal. For more information, see "Setting up fax using a standard telephone line" on page 32.
71.06	Unable to connect to HTTPS Fax Server.	Connection to HTTPS Fax Server is disconnected. Check the Internet connection of the printer.

Error codes	Error message	Solution
71.12	Memory full, cannot print faxes.	Touch **Print All** to print as many of the faxes as have been saved.
71.13	Memory full. Cannot send faxes.	Try one or more of the following: • Continue and try sending the fax again. • Scan the original document one page at a time, dial the fax number, and then scan the document.
71.4	Incorrect printer time.	To set the correct printer time, do the following: 1 Touch **Settings** > **Device** > **Preferences**. 2 Touch **Date and Time**, and then set the correct time.
72.01	E-mail SMTP server not set up. Contact system administrator.	Try either of the following: • Set up your email function. For more information, see "Configuring the e-mail SMTP settings" on page 37. • Disable the error message. For more information, see "Disabling the 'SMTP server not set up' error message" on page 272.
80.01, 80.03, 80.09	Maintenance kit nearly low.	Touch **Continue** to clear the message.
80.11, 80.13, 80.19	Maintenance kit low.	
80.21, 80.23, 80.29	Maintenance kit very low.	
84.00, 84.01, 84.02, 84.03, 84.09	Imaging unit nearly low.	Touch **Continue** to clear the message.
84.11, 84.12, 84.13, 84.19	Imaging unit low.	
84.21, 84.22, 84.23, 84.29	Imaging unit very low.	
84.31, 84.32, 84.33	Replace imaging unit, recommended life exceeded.	See "Replacing the imaging unit" on page 185.
84.41, 84.42, 84.43	Replace imaging unit to resume printing.	
88.00, 88.08, 88.09	Cartridge nearly low.	Touch **Continue** to clear the message.
88.10, 88.18, 88.19	Cartridge low.	
88.20, 88.28, 88.29	Cartridge very low.	
88.30, 88.38	**Replace cartridge, <num/> estimated pages remain.**	See "Replacing the toner cartridge" on page 183.
88.30, 88.38	Replace cartridge.	
88.40, 88.48	Replace cartridge, 0 pages remain.	

Error codes	Error message	Solution
200.03	**Paper jam, [jam header]. [xxx.yy]**	See "Paper jam in the multipurpose feeder" on page 263.
200.04, 200.05, 200.14, 200.24, 200.25, 200.34, 200.35, 200.44, 200.45, 202.05, 202.15, 202.25, 202.35, 202.45, 230.03, 230.13, 230.23, 230.33, 230.43	**Paper jam, [jam header]. [xxx.yy]**	See "Paper jam in door B" on page 260.
200.12, 200.15, 200.22, 200.32, 200.33, 200.42, 200.91, 202.03, 200.13, 202.33, 202.43, 202.93	**Paper jam, [jam header]. [xxx.yy]**	See "Paper jam in door A" on page 257.
200.13, 200.23, 200.33, 200.43, 241.86	**Paper jam, [jam header]. [xxx.yy]**	See "Paper jam in trays" on page 262.
230.15, 230.25, 230.33, 230.45, 232.13, 232.23, 232.33, 232.43, 232.53, 232.93	**Paper jam, [jam header]. [xxx.yy]**	See "Paper jam in the duplex unit" on page 261.
24x.x6, 24x.8y, 602.x9 66x.x3, 66x.8y	**Paper loading error, [jam header]. [xxx.yy]**	See "Paper jam in trays" on page 262.
280.11, 280.13, 280.15, 280.91, 280.93, 280.95, 284.11, 284.13, 284.15, 284.91, 284.93, 284.95, 295.01, 680.10, 680.20, 680.40	**Scanner jam. [xxx.yy]**	See "Paper jam in the automatic document feeder" on page 263.

Printing problems

Print quality is poor

Blank or white pages

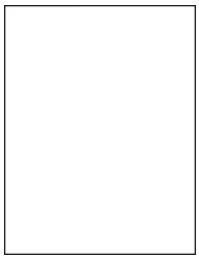

Note: Before solving the problem, print the Print Quality Test Pages. From the home screen, touch **Settings** > **Troubleshooting** > **Print Quality Test Pages**.

Action	Yes	No
Step 1 **a** Check if the printer is using a genuine and supported Lexmark toner cartridge. **Note:** If the cartridge is not supported, then install a supported one. **b** Print the document. Is the printer printing blank or white pages?	Go to step 2.	The problem is solved.
Step 2 **a** Remove any packing material that is left on the imaging unit. **1** Remove the toner cartridge, and then remove the imaging unit. **Warning—Potential Damage:** Do not expose the imaging unit to direct light for more than 10 minutes. Extended exposure to light may cause print quality problems. **Warning—Potential Damage:** Do not touch the photoconductor drum under the imaging unit. Doing so may affect the quality of future print jobs. **2** Check the imaging unit for signs of damage, and replace if necessary. **Note:** Make sure that the photoconductor drum contact is not bent or out of place. **3** Firmly shake the imaging unit to redistribute the toner. **4** Insert the imaging unit, and then insert the toner cartridge. **b** Print the document. Is the printer printing blank or white pages?	Go to step 3.	The problem is solved.
Step 3 Check the status of the toner cartridge, and replace if necessary. **a** From the home screen, touch **Status/Supplies** > **Supplies**. **b** Print the document. Is the printer printing blank or white pages?	Contact **customer support**.	The problem is solved.

Dark print

Note: Before solving the problem, print the Print Quality Test Pages. From the home screen, touch **Settings** > **Troubleshooting** > **Print Quality Test Pages**.

Action	Yes	No
Step 1 **a** Check if the printer is using a genuine and supported Lexmark toner cartridge. **Note:** If the cartridge is not supported, then install a supported one. **b** Print the document. Is the print dark?	Go to step 2.	The problem is solved.
Step 2 **a** Turn off the printer, wait for about 10 seconds, and then turn on the printer. **b** Reduce toner darkness. From the home screen, touch **Settings** > **Print** > **Quality** > **Toner Darkness**. **c** Print the document. Is the print dark?	Go to step 3.	The problem is solved.
Step 3 **a** Depending on your operating system, specify the paper type from the Printing Preferences or Print dialog. **Notes:** • Make sure that the setting matches the paper loaded. • You can also change the setting on the printer control panel. From the home screen, touch **Settings** > **Paper** > **Tray Configuration** > **Paper Size/Type**. **b** Print the document. Is the print dark?	Go to step 4.	The problem is solved.
Step 4 Check if the paper has texture or rough finishes. Are you printing on textured or rough paper?	Go to step 5.	Go to step 6.
Step 5 **a** Replace textured paper with plain paper. **b** Print the document. Is the print dark?	Go to step 6.	The problem is solved.

Action	Yes	No
Step 6 **a** Load paper from a fresh package. **Note:** Paper absorbs moisture due to high humidity. Store paper in its original wrapper until you are ready to use it. **b** Print the document. Is the print dark?	Go to step 7.	The problem is solved.
Step 7 **a** Remove, and then insert the imaging unit. **Warning—Potential Damage:** Do not expose the imaging unit to direct light for more than 10 minutes. Extended exposure to light may cause print quality problems. **Warning—Potential Damage:** Do not touch the photoconductor drum under the imaging unit. Doing so may affect the quality of future print jobs. **b** Print the document. Is the print dark?	Go to step 8.	The problem is solved.
Step 8 **a** Replace the imaging unit. **b** Print the document. Is the print dark?	Contact **customer support**.	The problem is solved.

Fine lines are not printed correctly

Note: Before solving the problem, print the Print Quality Test Pages. From the home screen, touch **Settings** > **Troubleshooting** > **Print Quality Test Pages**.

Action	Yes	No
Step 1 **a** Check if the printer is using a genuine and supported Lexmark toner cartridge. **Note:** If the cartridge is not supported, then install a supported one. **b** Print the document. Are fine lines printed correctly?	The problem is solved.	Go to step 2.
Step 2 **a** Adjust the print quality settings. **1** From the home screen, touch **Settings** > **Print** > **Quality** > **Pixel Boost** > **Fonts**. **2** Adjust Toner Darkness to 7. From the home screen, touch **Settings** > **Print** > **Quality** > **Toner Darkness**. **b** Print the document. Are fine lines printed correctly?	The problem is solved.	Contact **customer support**.

Folded or wrinkled paper

Note: Before solving the problem, print the Print Quality Test Pages. From the home screen, touch **Settings** > **Troubleshooting** > **Print Quality Test Pages**.

Action	Yes	No
Step 1 **a** Check if the printer is using a genuine and supported Lexmark toner cartridge. **Note:** If the cartridge is not supported, then install a supported one. **b** Print the document. Is the paper folded or wrinkled?	Go to step 2.	The problem is solved.

Action	Yes	No
Step 2 **a** Load paper from a fresh package. **Note:** Paper absorbs moisture due to high humidity. Store paper in its original wrapper until you are ready to use it. **b** Print the document. Is the paper folded or wrinkled?	Go to step 3.	The problem is solved.
Step 3 **a** Depending on your operating system, specify the paper type from the Printing Preferences or Print dialog. **Notes:** • Make sure that the setting matches the paper loaded. • You can also change the setting from the printer control panel. From the home screen, touch **Settings** > **Paper** > **Tray Configuration** > **Paper Size/Type**. **b** Print the document. Is the paper folded or wrinkled?	Contact **customer support**.	The problem is solved.

Gray background

Note: Before solving the problem, print the Print Quality Test Pages. From the control panel, navigate to **Settings** > **Troubleshooting** > **Print Quality Test Pages**.

Action	Yes	No
Step 1 **a** Turn off the printer, wait for 10 seconds, and then turn on the printer. **b** Decrease toner darkness. From the control panel, navigate to **Settings** > **Print** > **Quality** > **Toner Darkness**. **c** Print the document. Does gray background appear on prints?	Go to step 2.	The problem is solved.

Action	Yes	No
Step 2 **a** Check if the printer is using a genuine and supported Lexmark toner cartridge. **Note:** If the cartridge is not supported, then install a supported one. **b** Print the document. Does gray background appear on prints?	Go to step 3.	The problem is solved.
Step 3 **a** Depending on your operating system, specify the paper type from the Printing Preferences or Print dialog. **Notes:** • Make sure that the setting matches the paper loaded. • You can also change the setting from the printer control panel. Navigate to **Settings** > **Paper** > **Tray Configuration** > **Paper Size/Type**. **b** Print the document. Does gray background appear on prints?	Go to step 4.	The problem is solved.
Step 4 **a** Remove, and then insert the imaging unit. **Warning—Potential Damage:** Do not expose the imaging unit to direct light. Extended exposure to light may cause print quality problems. **Warning—Potential Damage:** Do not touch the photoconductor drum. Doing so may affect the quality of future print jobs. **b** Print the document. Does gray background appear on prints?	Go to step 5.	The problem is solved.
Step 5 **a** Update the printer firmware. For more information, see the “Updating firmware” section. **b** Print the document. Does gray background appear on prints?	Go to step 6.	The problem is solved.
Step 6 **a** Replace the imaging unit. **b** Print the document. Does gray background appear on prints?	Contact **customer support**.	The problem is solved.

Incorrect margins

Incorrect margins

Note: Before solving the problem, print the Print Quality Test Pages. From the home screen, touch **Settings** > **Troubleshooting** > **Print Quality Test Pages**.

Action	Yes	No
Step 1 **a** Adjust the paper guides in the tray to the correct position for the paper loaded. **b** Print the document. Are the margins correct?	The problem is solved.	Go to step 2.
Step 2 **a** Depending on your operating system, specify the paper size from the Printing Preferences or Print dialog. **Notes:** • Make sure that the setting matches the paper loaded. • You can also change the setting on the printer control panel. From the home screen, touch **Settings** > **Paper** > **Tray Configuration** > **Paper Size/Type**. **b** Print the document. Are the margins correct?	The problem is solved.	Contact **customer support**.

Light print

Note: Before solving the problem, print the Print Quality Test Pages. From the home screen, touch **Settings** > **Troubleshooting** > **Print Quality Test Pages**.

Action	Yes	No
Step 1 **a** Check if the printer is using a genuine and supported Lexmark toner cartridge. **Note:** If the cartridge is not supported, then install a supported one. **b** Print the document. Is the print light?	Go to step 2.	The problem is solved.
Step 2 **a** Turn off the printer, wait for about 10 seconds, and then turn on the printer. **b** Increase toner darkness. From the home screen, touch **Settings** > **Print** > **Quality** > **Toner Darkness**. **c** Print the document. Is the print light?	Go to step 3.	The problem is solved.
Step 3 **a** Depending on your operating system, specify the paper type from the Printing Preferences or Print dialog. **Notes:** • Make sure that the setting matches the paper loaded. • You can also change the setting on the printer control panel. From the home screen, touch **Settings** > **Paper** > **Tray Configuration** > **Paper Size/Type**. **b** Print the document. Is the print light?	Go to step 4.	The problem is solved.
Step 4 **a** Depending on your operating system, specify the print resolution from the Printing Preferences or Print dialog. **b** Set the resolution to **600 dpi**. **c** Print the document. Is the print light?	Go to step 5.	The problem is solved.

Action	Yes	No
Step 5 **a** Remove the imaging unit. **Warning—Potential Damage:** Do not expose the imaging unit to direct light. Extended exposure to light can cause print quality problems. **Warning—Potential Damage:** Do not touch the photoconductor drum. Doing so may affect the quality of future print jobs. **b** Firmly shake the imaging unit to redistribute the toner. **c** Insert the imaging unit. **d** Turn off the printer, wait for 10 seconds, and then turn on the printer. **e** Print the document. Is the print light?	Go to step 6.	The problem is solved.
Step 6 **a** Check the status of the toner cartridge. From the home screen, touch **Settings** > **Reports** > **Device** > **Device Statistics**. **b** From the Supply Information section of the pages printed, check the status of the toner cartridge. Is the toner cartridge near end of life?	Go to step 7.	Contact **customer support**.
Step 7 **a** Replace the toner cartridge. **b** Print the document. Is the print light?	Contact **customer support**.	The problem is solved.

Mottled print and dots

Note: Before solving the problem, print the Print Quality Test Pages. From the home screen, touch **Settings** > **Troubleshooting** > **Print Quality Test Pages**.

Action	Yes	No
Step 1 **a** Check if the printer is using a genuine and supported Lexmark toner cartridge. **Note:** If the cartridge is not supported, then install a supported one. **b** Print the document. Is the print mottled?	Go to step 2.	The problem is solved.
Step 2 Check the printer for leaked toner contamination. Is the printer free of leaked toner?	Go to step 4.	Go to step 3.
Step 3 **a** Replace the toner cartridge. **b** Print the document. Is the print mottled?	Go to step 4.	The problem is solved.
Step 4 Check the status of the imaging unit. From the home screen, touch **Status/Supplies** > **Supplies**. Is the imaging unit near end of life?	Go to step 5.	Contact **customer support**.
Step 5 **a** Replace the imaging unit. **b** Print the document. Is the print mottled?	Contact **customer support**.	The problem is solved.

Paper curl

Action	Yes	No
Step 1 **a** Check if the printer is using a genuine and supported Lexmark toner cartridge. **Note:** If the cartridge is not supported, then install a supported one. **b** Print the document. Is the paper curled?	Go to step 2.	The problem is solved.
Step 2 **a** Adjust the guides in the tray to the correct position for the paper loaded. **b** Print the document. Is the paper curled?	Go to step 3.	The problem is solved.
Step 3 **a** Depending on your operating system, specify the paper size and paper type from the Printing Preferences or Print dialog. **Notes:** • Make sure that the settings match the paper loaded. • You can also change the settings from the printer control panel. **b** Print the document. Is the paper curled?	Go to step 4.	The problem is solved.
Step 4 **a** Remove paper from the tray, and then turn over the paper. **b** Print the document. Is the paper curled?	Go to step 5.	The problem is solved.
Step 5 **a** Load paper from a fresh package. **Note:** Paper absorbs moisture due to high humidity. Store paper in its original wrapper until you are ready to use it. **b** Print the document. Is the paper curled?	Go to step 6.	The problem is solved.
Step 6 **a** Check if the paper loaded is supported. **Note:** If paper is not supported, then load a supported one. **b** Print the document. Is the paper curled?	Contact **customer support**.	The problem is solved.

Print crooked or skewed

Note: Before solving the problem, print the Print Quality Test Pages. From the home screen, touch **Settings** > **Troubleshooting** > **Print Quality Test Pages**.

Action	Yes	No
Step 1 **a** Pull out the tray. **b** Remove the paper, and then load paper from a fresh package. **Note:** Paper absorbs moisture due to high humidity. Store paper in its original wrapper until you are ready to use it. **c** Squeeze and slide the paper guides to the correct position for the size of the paper you are loading. **d** Insert the tray. **e** Print the document. Is the print crooked or skewed?	Go to step 2.	The problem is solved.
Step 2 **a** Check if you are printing on a supported paper. **b** Print the document. Is the print crooked or skewed?	Contact **customer support**.	The problem is solved.

Solid black pages

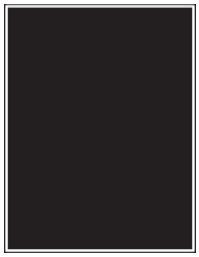

Note: Before solving the problem, print the Print Quality Test Pages. From the home screen, touch **Settings** > **Troubleshooting** > **Print Quality Test Pages**.

Action	Yes	No
Step 1 **a** Check if the printer is using a genuine and supported Lexmark toner cartridge. **Note:** If ther cartridge is not supported, then install a supported one. **b** Print the document. Is the printer printing solid black pages?	Go to step 2.	The problem is solved.
Step 2 **a** Remove the imaging unit. **Warning—Potential Damage:** Do not expose the imaging unit to direct light for more than 10 minutes. Extended exposure to light may cause print quality problems. **Warning—Potential Damage:** Do not touch the photoconductor drum under the imaging unit. Doing so may affect the quality of future print jobs. **b** Remove any packing material that is stuck on the imaging unit. **Note:** Make sure to remove any obstruction between the charge roller and photoconductor drum. **c** Insert the imaging unit. **d** Print the document. Is the printer printing solid black pages?	Go to step 3.	The problem is solved.
Step 3 Check the imaging unit for signs of damage. Is the imaging unit free from damage?	Contact **customer support**.	Go to step 4.
Step 4 **a** Replace the imaging unit. **b** Print the document. Is the printer printing solid black pages?	Contact **customer support**.	The problem is solved.

Text or images cut off

Note: Before solving the problem, print the Print Quality Test Pages. From the home screen, touch **Settings** > **Troubleshooting** > **Print Quality Test Pages**.

Action	Yes	No
Step 1 **a** Check if the printer is using a genuine and supported Lexmark toner cartridge. **Note:** If the cartridge is not supported, then install a supported one. **b** Print the document. Are text or images cut off?	Go to step 2.	The problem is solved.
Step 2 **a** Remove the imaging unit. **Warning—Potential Damage:** Do not expose the imaging unit to direct light for more than 10 minutes. Extended exposure to light may cause print quality problems. **Warning—Potential Damage:** Do not touch the photoconductor drum under the imaging unit. Doing so may affect the quality of future print jobs. **b** Remove any packing material that is stuck on the imaging unit. **Note:** Make sure to remove any obstruction between the charge roller and photoconductor drum. **c** Insert the imaging unit. **d** Print the document. Are text or images cut off?	Go to step 3.	The problem is solved.
Step 3 **a** Replace the imaging unit. **b** Print the document. Are text or images cut off?	Contact **customer support**.	The problem is solved.

Toner easily rubs off

Note: Before solving the problem, print the Print Quality Test Pages. From the home screen, touch **Settings** > **Troubleshooting** > **Print Quality Test Pages**.

Action	Yes	No
Step 1 **a** Check if the printer is using a genuine and supported Lexmark toner cartridge. **Note:** If the cartridge is not supported, then install a supported one. **b** Print the document. Does toner easily rub off?	Go to step 2.	The problem is solved.
Step 2 **a** Depending on your operating system, specify the paper type from the Printing Preferences or Print dialog. **Notes:** • Make sure that the setting matches the paper loaded. • You can also change the setting on the printer control panel. From the home screen, touch **Settings** > **Paper** > **Tray Configuration** > **Paper Size/Type**. **b** Print the document. Does toner easily rub off?	Contact **customer support**.	The problem is solved.

Horizontal light bands

Note: Before solving the problem, print the Print Quality Test Pages. From the home screen, touch **Settings** > **Troubleshooting** > **Print Quality Test Pages**.

Action	Yes	No
Step 1 **a** Check if the printer is using a genuine and supported Lexmark toner cartridge. **Note:** If the cartridge is not supported, then install a supported one. **b** Print the document. Do horizontal light bands appear on prints?	Go to step 2.	The problem is solved.

Action	Yes	No
Step 2 **a** Remove, and then insert the imaging unit. **Warning—Potential Damage:** Do not expose the imaging unit to direct light. Extended exposure to light may cause print quality problems. **Warning—Potential Damage:** Do not touch the photoconductor drum. Doing so may affect the quality of future print jobs. **b** Print the document. Do horizontal light bands appear on prints?	Go to step 3.	The problem is solved.
Step 3 **a** Replace the imaging unit. **b** Print the document. Do horizontal light bands appear on prints?	Go to step 4.	The problem is solved.
Step 4 **a** Turn off the printer, wait for 10 seconds, and then turn on the printer. **b** Print the document. Do horizontal light bands appear on prints?	Contact **customer support**.	The problem is solved.

Vertical light bands

Note: Before solving the problem, print the Print Quality Test Pages. From the home screen, touch **Settings** > **Troubleshooting** > **Print Quality Test Pages**.

Action	Yes	No
a Check if the printer is using a genuine and supported Lexmark toner cartridge. **Note:** If the cartridge is not supported, then install a supported one. **b** Print the document. Do vertical light bands appear on prints?	Contact **customer support**.	The problem is solved.

Vertical white lines

Note: Before solving the problem, print the Print Quality Test Pages. From the home screen, touch **Settings** > **Troubleshooting** > **Print Quality Test Pages**.

Action	Yes	No
Step 1 **a** Check if the printer is using a genuine and supported Lexmark toner cartridge. **Note:** If the cartridge is not supported, then install a supported one. **b** Print the document. Do vertical white lines appear on prints?	Go to step 2.	The problem is solved.
Step 2 **a** Depending on your operating system, specify the paper type from the Printing Preferences or Print dialog. **Notes:** • Make sure that the setting matches the paper loaded. • You can also change the setting on the printer control panel. From the home screen, touch **Settings** > **Paper** > **Tray Configuration** > **Paper Size/Type**. **b** Print the document. Do vertical white lines appear on prints?	Contact **customer support**.	The problem is solved.

Vertical dark bands

Note: Before solving the problem, print the Print Quality Test Pages. From the home screen, touch **Settings** > **Troubleshooting** > **Print Quality Test Pages**.

Action	Yes	No
Step 1 **a** Check if the printer is using a genuine and supported Lexmark toner cartridge. **Note:** If the cartridge is not supported, then install a supported one. **b** Print the document. Do vertical dark bands appear on prints?	Go to step 2.	The problem is solved.
Step 2 **a** Remove the toner cartridge, and then remove the imaging unit. **Warning—Potential Damage:** Do not expose the imaging unit to direct light for more than 10 minutes. Extended exposure to light may cause print quality problems. **Warning—Potential Damage:** Do not touch the photoconductor drum under the imaging unit. Doing so may affect the quality of future print jobs. **b** Insert the imaging unit, and then insert the cartridge. **c** Print the document. Do vertical dark bands appear on prints?	Go to step 3.	The problem is solved.
Step 3 **a** Remove the imaging unit. **Warning—Potential Damage:** Do not expose the imaging unit to direct light for more than 10 minutes. Extended exposure to light may cause print quality problems. **Warning—Potential Damage:** Do not touch the photoconductor drum under the imaging unit. Doing so may affect the quality of future print jobs. **b** Remove any packing material that is stuck on the imaging unit. **Note:** Make sure to remove any obstruction between the charge roller and photoconductor drum. **c** Insert the imaging unit. **d** Print the document. Do vertical dark bands appear on prints?	Go to step 4.	The problem is solved.
Step 4 **a** Check if a bright light enters the right side of the printer, and move the printer if necessary. **b** Print the document. Do vertical dark bands appear on prints?	Contact **customer support**.	The problem is solved.

Vertical dark lines or streaks

Note: Before solving the problem, print the Print Quality Test Pages. From the home screen, touch **Settings** > **Troubleshooting** > **Print Quality Test Pages**.

Action	Yes	No
Step 1 **a** From the home screen, touch **Settings** > **Troubleshooting** > **Cleaning the Scanner** **b** Print the document. Do vertical dark lines or streaks appear on prints?	Go to step 3.	Go to step 2.
Step 2 **a** Using a damp, soft, lint-free cloth, clean the scanner. For more information, see "Cleaning the scanner" on page 210. **b** Copy the document using the ADF. Do vertical dark lines or streaks appear on prints?	Contact **customer support**.	The problem is solved.
Step 3 **a** Check if the printer is using a genuine and supported Lexmark toner cartridge. **Note:** If the cartridge is not supported, then install a supported one. **b** Print the document. Do vertical dark lines or streaks appear on prints?	Go to step 4.	The problem is solved.

Action	Yes	No
Step 4 **a** Remove, and then insert the imaging unit. **Warning—Potential Damage:** Do not expose the imaging unit to direct light for more than 10 minutes. Extended exposure to light can cause print quality problems. **Warning—Potential Damage:** Do not touch the photoconductor drum under the imaging unit. Doing so may affect the quality of future print jobs. **b** Print the document. Do vertical dark lines or streaks appear on prints?	Go to step 5.	The problem is solved.
Step 5 **a** Replace the imaging unit. **b** Print the document. Do vertical dark lines or streaks appear on prints?	Contact **customer support**.	The problem is solved.

Vertical dark streaks with print missing

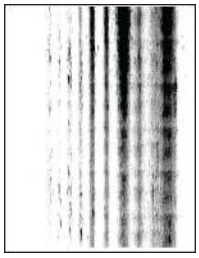

Note: Before solving the problem, print the Print Quality Test Pages. From the home screen, touch **Settings** > **Troubleshooting** > **Print Quality Test Pages**.

Action	Yes	No
Step 1 **a** Check if the printer is using a genuine and supported Lexmark toner cartridge. **Note:** If the cartridge is not supported, then install a supported one. **b** Print the document. Do vertical dark streaks with missing images appear on prints?	Go to step 2.	The problem is solved.

Action	Yes	No
Step 2 **a** Remove the imaging unit. **Warning—Potential Damage:** Do not expose the imaging unit to direct light for more than 10 minutes. Extended exposure to light may cause print quality problems. **Warning—Potential Damage:** Do not touch the photoconductor drum under the imaging unit. Doing so may affect the quality of future print jobs. **b** Remove any packing material that is stuck on the imaging unit. **Note:** Make sure to remove any obstruction between the charge roller and photoconductor drum. **c** Insert the imaging unit. **d** Print the document. Do vertical dark streaks with missing images appear on prints?	Contact **customer support**.	The problem is solved.

Repeating defects

Note: Before solving the problem, print the Print Quality Test Pages. From the home screen, touch **Settings** > **Troubleshooting** > **Print Quality Test Pages**.

Action	Yes	No
Step 1 Using the Print Quality Test Pages, check if the distance between the repeating defects is equal to any of the following: • 97 mm (3.82 in.) • 47 mm (1.85 in.) • 38 mm (1.5 in.) Does the distance between the repeating defects match any of the measurements?	Go to step 2.	Take note of the distance, and then contact **customer support**.
Step 2 **a** Replace the imaging unit. **b** Print the document. Do the repeating defects appear?	Contact **customer support**.	The problem is solved.

Print jobs do not print

Action	Yes	No
Step 1 **a** From the document you are trying to print, open the Print dialog, and then check if you have selected the correct printer. **b** Print the document. Is the document printed?	The problem is solved.	Go to step 2.
Step 2 **a** Check if the printer is on. **b** Resolve any error messages that appear on the display. **c** Print the document. Is the document printed?	The problem is solved.	Go to step 3.
Step 3 **a** Check if the ports are working and if the cables are securely connected to the computer and the printer. For more information, see the setup documentation that came with the printer. **b** Print the document. Is the document printed?	The problem is solved.	Go to step 4.
Step 4 **a** Turn off the printer, wait for about 10 seconds, and then turn on the printer. **b** Print the document. Is the document printed?	The problem is solved.	Go to step 5.
Step 5 **a** Remove, and then reinstall the print driver. **b** Print the document. Is the document printed?	The problem is solved.	Contact **customer support**.

Confidential and other held documents do not print

Action	Yes	No
Step 1 **a** From the control panel, check if the documents appear in the Held Jobs list. **Note:** If the documents are not listed, then print the documents using the Print and Hold options. **b** Print the documents. Are the documents printed?	The problem is solved.	Go to step 2.
Step 2 The print job may contain a formatting error or invalid data. • Delete the print job, and then send it again. • For PDF files, generate a new file, and then print the documents. Are the documents printed?	The problem is solved.	Go to step 3.
Step 3 If you are printing from the Internet, then the printer may be reading the multiple job titles as duplicates. **For Windows users** **a** Open the Printing Preferences dialog. **b** From the Print and Hold tab, click **Use Print and Hold**, and then click **Keep duplicate documents**. **c** Enter a PIN, and then save the changes. **d** Send the print job. **For Macintosh users** **a** Save and name each job differently. **b** Send the job individually. Are the documents printed?	The problem is solved.	Go to step 4.
Step 4 **a** Delete some held jobs to free up printer memory. **b** Print the documents. Are the documents printed?	The problem is solved.	Go to step 5.
Step 5 **a** Add printer memory. **b** Print the documents. Are the documents printed?	The problem is solved.	Contact **customer support**.

Job prints from the wrong tray or on the wrong paper

Action	Yes	No
Step 1 **a** Check if you are printing on the correct paper. **b** Print the document. Is the document printed on the correct paper?	Go to step 2.	Load the correct paper size and paper type.
Step 2 **a** Depending on your operating system, specify the paper size and paper type from the Printing Preferences or Print dialog. **Note:** You can also change the settings on the printer control panel. From the home screen, touch **Settings** > **Paper** > **Tray Configuration** > **Paper Size/Type**. **b** Make sure that the settings match the paper loaded. **c** Print the document. Is the document printed on the correct paper?	The problem is solved.	Go to step 3.
Step 3 **a** Check if the trays are linked. For more information, see "Linking trays" on page 48. **b** Print the document. Is the document printed from the correct tray?	The problem is solved.	Contact **customer support**.

Slow printing

Action	Yes	No
Step 1 Make sure that the printer cable is securely connected to the printer and to the computer, print server, option, or other network device. Is the printer printing slow?	Go to step 2.	The problem is solved.
Step 2 **a** Make sure that the printer is not in Quiet Mode. From the home screen, touch **Settings** > **Device** > **Maintenance** > **Configuration Menu** > **Device Operations** > **Quiet Mode**. **b** Print the document. Is the printer printing slow?	Go to step 3.	The problem is solved.

Action	Yes	No
Step 3 **a** Depending on your operating system, specify the print resolution from the Printing Preferences or Print dialog. **b** Set the resolution to **600 dpi**. **c** Print the document. Is the printer printing slow?	Go to step 4.	The problem is solved.
Step 4 **a** From the home screen, touch **Settings** > **Print** > **Quality** > **Print Resolution**. **b** Set the resolution to **600 dpi**. **c** Print the document. Is the printer printing slow?	Go to step 5.	The problem is solved.
Step 5 **a** Depending on your operating system, specify the paper type from the Printing Preferences or Print dialog. **Notes:** • Make sure that the setting matches the paper loaded. • You can also change the setting on the printer control panel. • Heavier paper prints more slowly. • Paper narrower than letter, A4, and legal may print more slowly. **b** Print the document. Is the printer printing slow?	Go to step 6.	The problem is solved.
Step 6 **a** Make sure that the printer settings for texture and weight match the paper being loaded. From the home screen, touch **Settings** > **Paper** > **Media Configuration** > **Media Types**. **Note:** Rough paper textures and heavy paper weights may print more slowly. **b** Print the document. Is the printer printing slow?	Go to step 7.	The problem is solved.
Step 7 Remove held jobs. Is the printer printing slow?	Go to step 8.	The problem is solved.

Action	Yes	No
Step 8 **a** Make sure that the printer is not overheating. **Notes:** • Allow the printer to cool down after a long print job. • Observe the recommended ambient temperature for the printer. For more information, see "Selecting a location for the printer" on page 19. **b** Print the document. Is the printer printing slow?	Contact **customer support**.	The problem is solved.

The printer is not responding

Action	Yes	No
Step 1 Check if the power cord is connected to the electrical outlet. **CAUTION—POTENTIAL INJURY:** To avoid the risk of fire or electrical shock, connect the power cord to an appropriately rated and properly grounded electrical outlet that is near the product and easily accessible. Is the printer responding?	The problem is solved.	Go to step 2.
Step 2 Check if the electrical outlet is turned off by a switch or breaker. Is the electrical outlet turned off by a switch or breaker?	Turn on the switch or reset the breaker.	Go to step 3.
Step 3 Check if the printer is on. Is the printer on?	Go to step 4.	Turn on the printer.
Step 4 Check if the printer is in Sleep or Hibernate mode. Is the printer in Sleep or Hibernate mode?	Press the power button to wake the printer.	Go to step 5.
Step 5 Check if the cables connecting the printer and the computer are inserted to the correct ports. Are the cables inserted to the correct ports?	Go to step 6.	Insert the cables to the correct ports.

Action	Yes	No
Step 6 Turn off the printer, install the hardware options, and then turn on the printer. For more information, see the documentation that came with the option. Is the printer responding?	The problem is solved.	Go to step 7.
Step 7 Install the correct print driver. Is the printer responding?	The problem is solved.	Go to step 8.
Step 8 Turn off the printer, wait for about 10 seconds, and then turn on the printer. Is the printer responding?	The problem is solved.	Contact **customer support**.

Unable to read flash drive

Unable to read flash drive

Action	Yes	No
Step 1 Check if the printer is not busy processing another print, copy, scan, or fax job. Is the printer ready?	Go to step 3.	Go to step 2.
Step 2 • Wait for the printer to finish processing the other job. • Remove, and then insert the flash drive. Does the printer recognize the flash drive?	The problem is solved.	Go to step 3.
Step 3 Check if the flash drive is inserted into the front USB port. **Note:** The flash drive does not work when it is inserted into the rear USB port. Is the flash drive inserted into the correct port?	Go to step 5.	Go to step 4.
Step 4 Insert the flash drive into the correct port. Does the printer recognize the flash drive?	The problem is solved.	Go to step 5.

Action	Yes	No
Step 5 Check if the flash drive is supported. For more information, see "Supported flash drives and file types" on page 80. Is the flash drive supported?	Go to step 7.	Go to step 6.
Step 6 Insert a supported flash drive. Does the printer recognize the flash drive?	The problem is solved.	Go to step 7.
Step 7 Remove, and then insert the flash drive. Does the printer recognize the flash drive?	The problem is solved.	Contact **customer support**.

Enabling the USB port

From the home screen, touch **Settings** > **Network/Ports** > **USB** > **Enable USB Port**.

Clearing jams

Avoiding jams

Load paper properly

- Make sure that the paper lies flat in the tray.

Correct loading of paper	Incorrect loading of paper
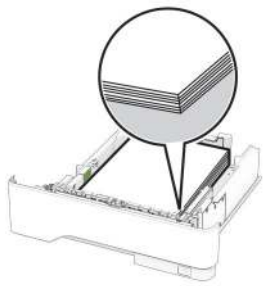	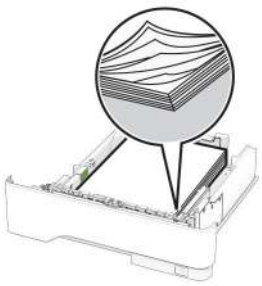

- Do not load or remove a tray while the printer is printing.
- Do not load too much paper. Make sure that the stack height is below the maximum paper fill indicator.

- Do not slide paper into the tray. Load paper as shown in the illustration.

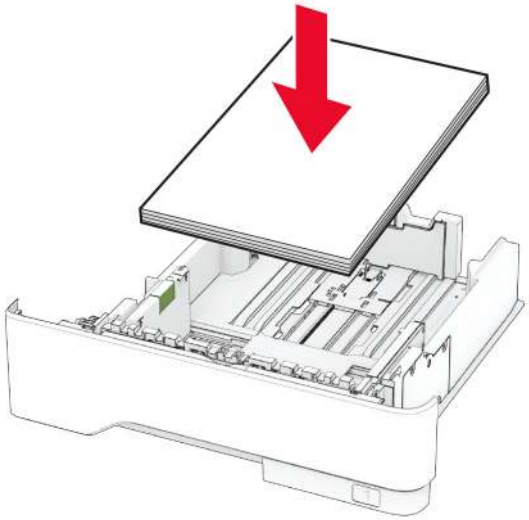

- Make sure that the paper guides are positioned correctly and are not pressing tightly against the paper or envelopes.
- Push the tray firmly into the printer after loading paper.

Use recommended paper

- Use only recommended paper or specialty media.
- Do not load paper that is wrinkled, creased, damp, bent, or curled.
- Flex, fan, and align the paper edges before loading.

- Do not use paper that has been cut or trimmed by hand.
- Do not mix paper sizes, weights, or types in the same tray.
- Make sure that the paper size and type are set correctly on the computer or printer control panel.
- Store paper according to manufacturer recommendations.

Identifying jam locations

Notes:

- When Jam Assist is set to On, the printer flushes blank pages or pages with partial prints after a jammed page has been cleared. Check your printed output for blank pages.
- When Jam Recovery is set to On or Auto, the printer reprints jammed pages.

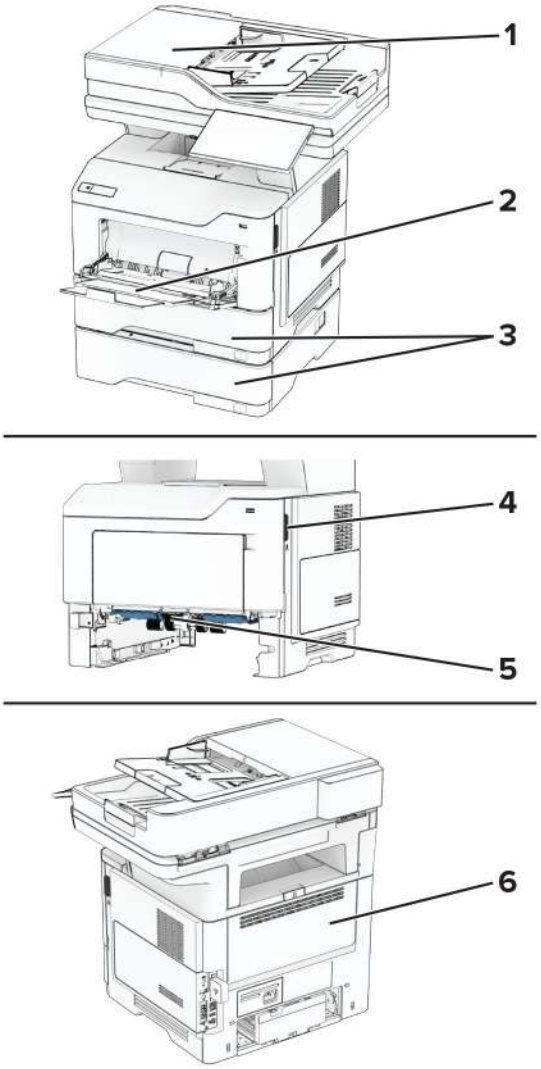

	Jam locations
1	Automatic document feeder
2	Multipurpose feeder
3	Trays
4	Door A
5	Duplex unit
6	Door B

Paper jam in door A

1 Open door A.

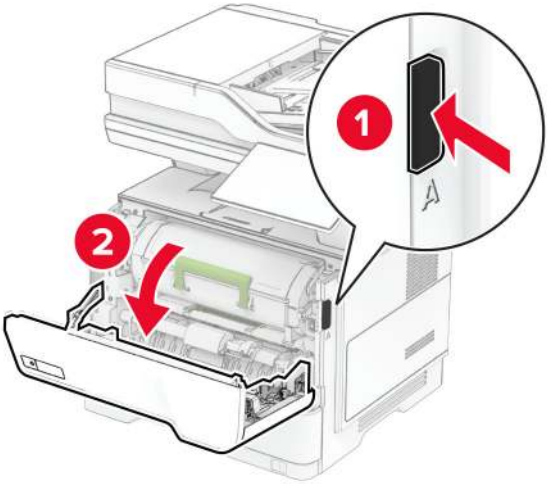

2 Remove the toner cartridge.

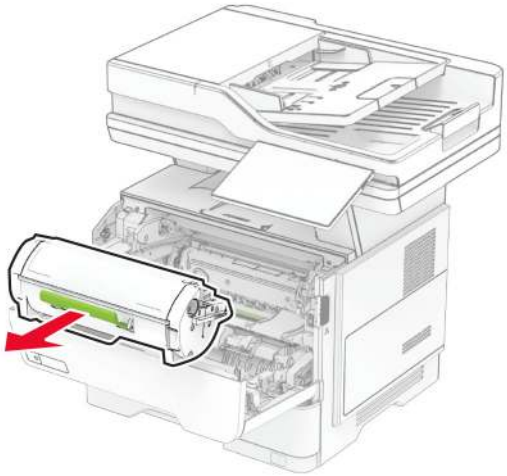

3 Remove the imaging unit.

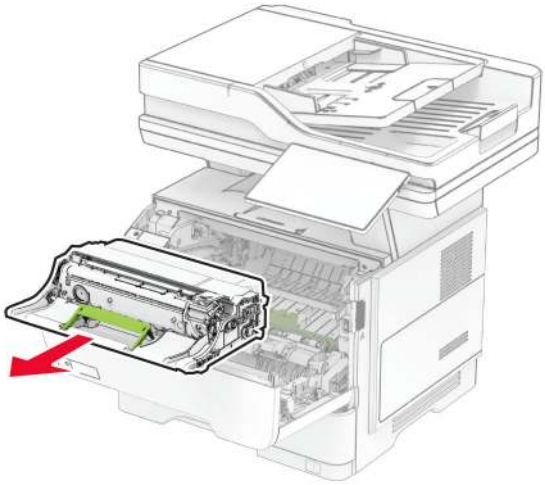

Warning—Potential Damage: Do not expose the imaging unit to direct light for more than 10 minutes. Extended exposure to light may cause print quality problems.

Warning—Potential Damage: Do not touch the photoconductor drum. Doing so may affect the quality of future print jobs.

4 Remove the jammed paper.

CAUTION—HOT SURFACE: The inside of the printer might be hot. To reduce the risk of injury from a hot component, allow the surface to cool before touching it.

Note: Make sure that all paper fragments are removed.

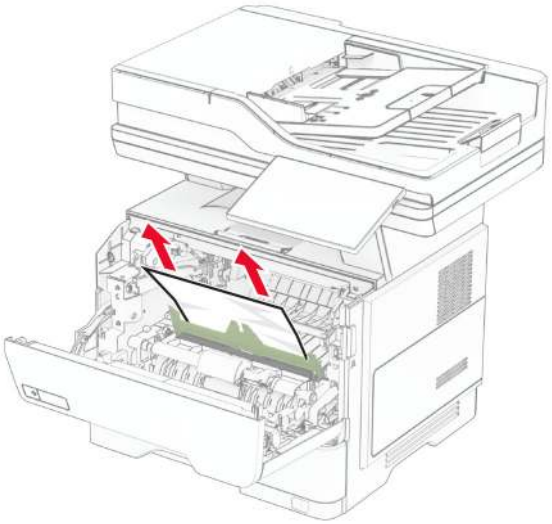

5 Insert the imaging unit.

Note: Use the arrows inside the printer as guides.

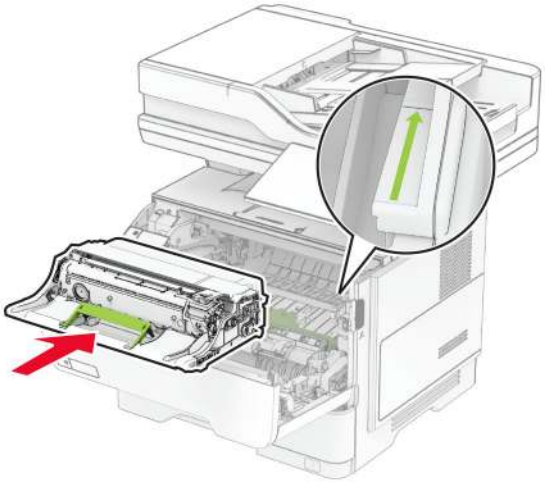

6 Insert the toner cartridge.

Note: Use the arrows inside the printer as guides.

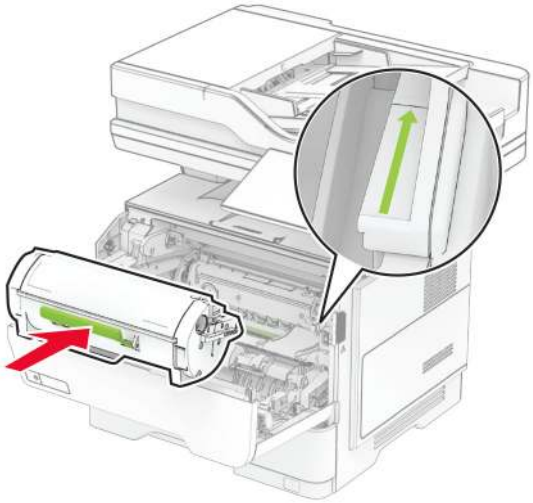

7 Close door A.

Paper jam in door B

1 Open door B.

CAUTION—HOT SURFACE: The inside of the printer might be hot. To reduce the risk of injury from a hot component, allow the surface to cool before touching it.

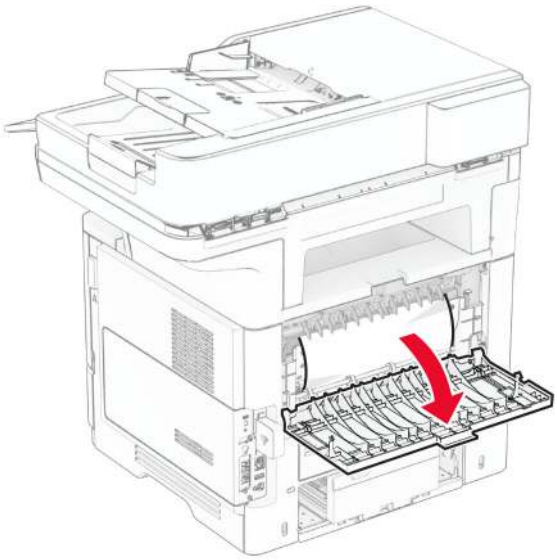

2 Remove the jammed paper.

Note: Make sure that all paper fragments are removed.

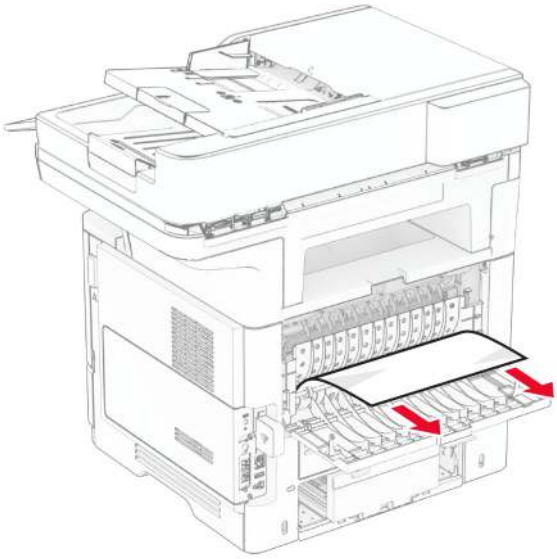

3 Close door B.

Paper jam in the duplex unit

1 Remove the tray.

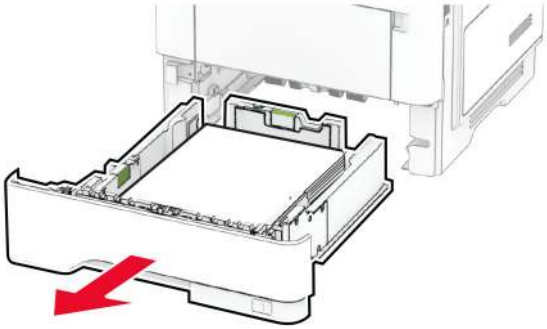

2 Push the duplex unit latch to open the duplex unit.

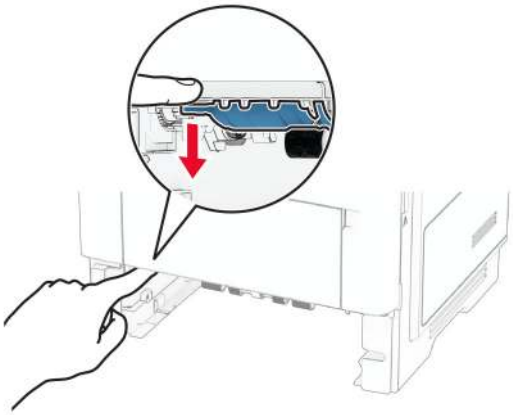

3 Remove the jammed paper.

Note: Make sure that all paper fragments are removed.

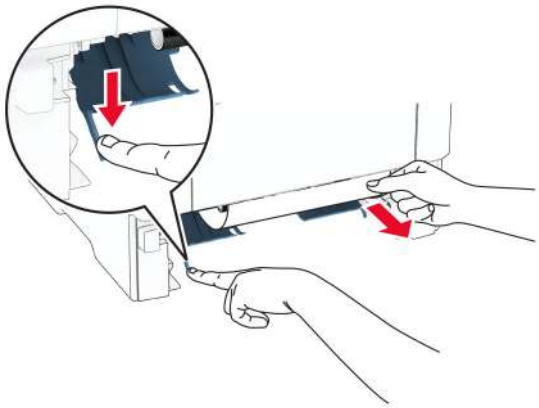

4 Insert the tray.

Paper jam in trays

1 Remove the tray.

Warning—Potential Damage: To prevent damage from electrostatic discharge, touch any exposed metal frame of the printer before accessing or touching interior areas of the printer.

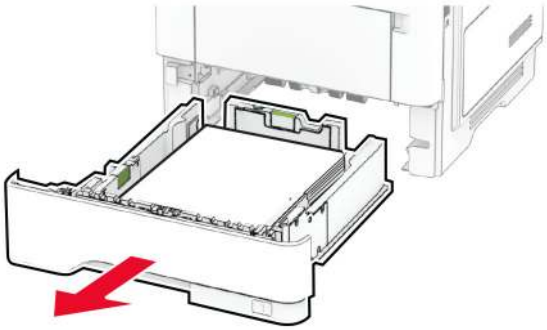

2 Remove the jammed paper.

Note: Make sure that all paper fragments are removed.

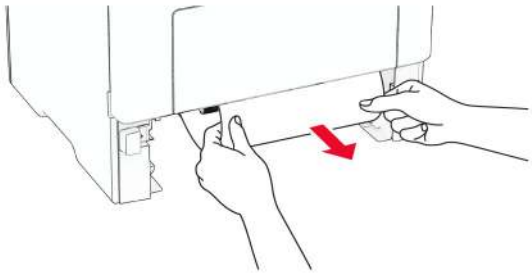

3 Insert the tray.

Paper jam in the multipurpose feeder

1 Remove paper from the multipurpose feeder.

2 Remove the jammed paper.

Note: Make sure that all paper fragments are removed.

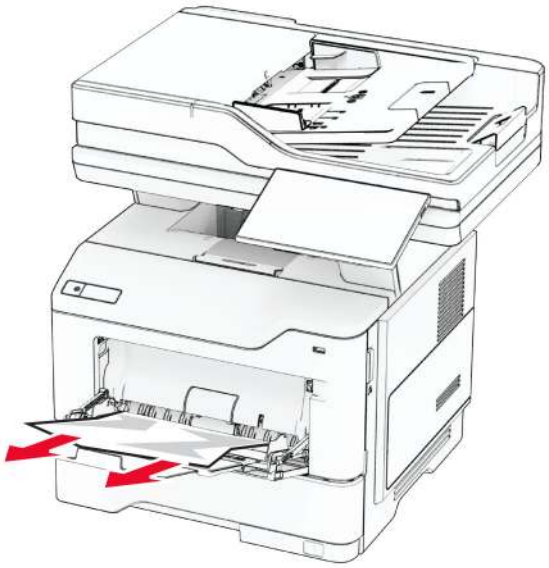

3 Reload paper, and then adjust the paper guide.

Paper jam in the automatic document feeder

Paper jam under the ADF top cover

1 Remove all original documents from the ADF tray.

2 Open door C.

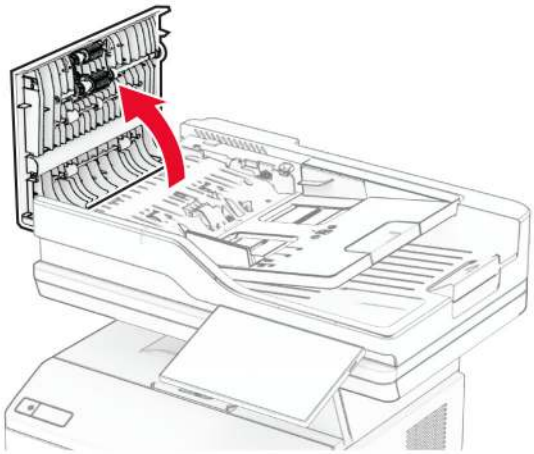

3 Remove the jammed paper.

Note: Make sure that all paper fragments are removed.

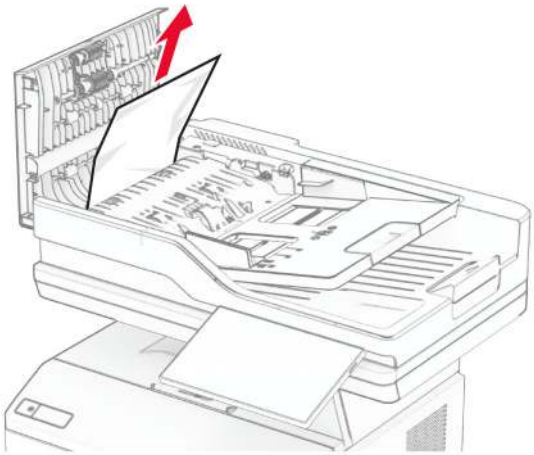

4 Close door C.

Paper jam under the ADF output bin

1 Remove all original documents from the ADF tray.

2 Lift the ADF tray, and then remove the jammed paper.

Note: Make sure that all paper fragments are removed.

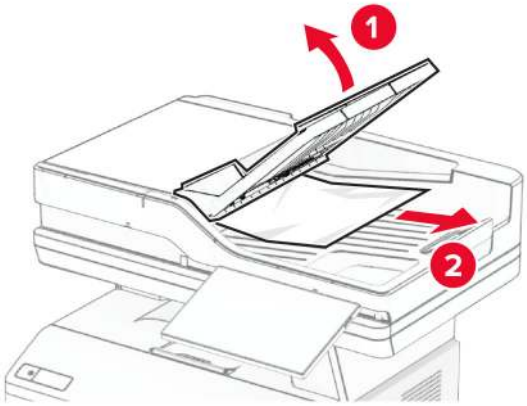

3 Place the ADF tray back into place.

Network connection problems

Cannot open Embedded Web Server

Action	Yes	No
Step 1 **a** Check if the printer is on. **b** Access the printer Embedded Web Server (EWS). Can you open the EWS?	The problem is solved.	Go to step 2.
Step 2 **a** Make sure that the printer IP address is correct. **Notes:** • View the IP address on the home screen. • An IP address appears as four sets of numbers separated by periods, such as 123.123.123.123. **b** Access the EWS. Can you open the EWS?	The problem is solved.	Go to step 3.
Step 3 **a** Make sure that you installed a supported browser: • Internet Explorer version 11 or later • Microsoft Edge • Safari version 6 or later • Google Chrome™ version 32 or later • Mozilla Firefox version 24 or later **b** Access the EWS. Can you open the EWS?	The problem is solved.	Go to step 4.
Step 4 **a** Check if the network connection is working. **Note:** If the connection is not working, then contact your administrator. **b** Access the EWS. Can you open the EWS?	The problem is solved.	Go to step 5.
Step 5 **a** Make sure that the cable connections to the printer and print server are secure. For more information, see the documentation that came with the print server. **b** Access the EWS. Can you open the EWS?	The problem is solved.	Go to step 6.

Action	Yes	No
Step 6 **a** Check if the web proxy servers are disabled. **Note:** If the servers are disabled, then contact your administrator. **b** Access the EWS. Can you open the EWS?	The problem is solved.	Contact **customer support**.

Cannot connect the printer to the Wi-Fi network

Action	Yes	No
Step 1 Make sure that Active Adapter is set to Auto. From the home screen, touch **Settings** > **Network/Ports** > **Network Overview** > **Active Adapter** > **Auto**. Can the printer connect to the Wi-Fi network?	The problem is solved.	Go to step 2.
Step 2 Check if the correct Wi-Fi network is selected. **Note:** Some routers may share the default SSID. Are you connecting to the correct Wi-Fi network?	Go to step 4.	Go to step 3.
Step 3 Connect to the correct Wi-Fi network. For more information, see "Connecting the printer to a Wi-Fi network" on page 71. Can the printer connect to the Wi-Fi network?	The problem is solved.	Go to step 4.
Step 4 Check the wireless security mode. From the home screen, touch **Settings** > **Network/Ports** > **Wireless** > **Wireless Security Mode**. Is the correct wireless security mode selected?	Go to step 6.	Go to step 5.
Step 5 Select the correct wireless security mode. Can the printer connect to the Wi-Fi network?	The problem is solved.	Go to step 6.
Step 6 Make sure that you entered the correct network password. **Note:** Take note of the spaces, numbers, and capitalization in the password. Can the printer connect to the Wi-Fi network?	The problem is solved.	Contact **customer support**.

Hardware options problems

Cannot detect internal option

Action	Yes	No
Step 1 Turn off the printer, wait for about 10 seconds, and then turn on the printer. Does the printer detect the internal option?	The problem is solved.	Go to step 2.
Step 2 Print the Menu Settings Page, and then check if the internal option appears in the Installed Features list. Is the internal option listed?	Go to step 4.	Go to step 3.
Step 3 Check if the internal option is installed properly into the controller board. **a** Turn off the printer, and then unplug the power cord from the electrical outlet. **b** Make sure that the internal option is installed into the appropriate connector on the controller board. **c** Connect the power cord to the electrical outlet, and then turn on the printer. ⚠ **CAUTION—POTENTIAL INJURY:** To avoid the risk of fire or electrical shock, connect the power cord to an appropriately rated and properly grounded electrical outlet that is near the product and easily accessible. Does the printer detect the internal option?	The problem is solved.	Go to step 4.
Step 4 **a** Check if the internal option is available in the print driver. **Note:** If necessary, manually add the internal option in the print driver to make it available for print jobs. For more information, see "Adding available options in the print driver" on page 51. **b** Print the document. Does the printer detect the internal option?	The problem is solved.	Contact **customer support**.

Defective flash detected

Try one or more of the following:

- Replace the defective intelligent storage drive.
- From the home screen, touch **Continue** to ignore the message and continue printing.

- Cancel the current print job.

Not enough free space in flash memory for resources

Try one or more of the following:

- Touch **Continue** to clear the message and continue printing.
- Delete fonts, macros, and other data stored in the flash memory.
- Install a hard disk.

Note: Downloaded fonts and macros that are not previously stored in the flash memory are deleted.

Red light on the convenience stapler

Try one or more of the following:

- Close the staple access door.
- Remove the loose staples.

  Note: After removing loose staples, two priming cycles are required before stapling. Insert a stack of paper into the stapler three times. The stapling starts at the third insertion.
- Replace the staple cartridge.

Issues with supplies

Replace cartridge, printer region mismatch

To correct this problem, purchase a cartridge with the correct region that matches the printer region, or purchase a worldwide cartridge.

- The first number in the message after 42 indicates the region of the printer.
- The second number in the message after 42 indicates the region of the cartridge.

Printer and toner cartridge regions

Region	Numeric code
Worldwide or Undefined region	0
North America (United States, Canada), Australia, New Zealand	1
European Economic Area, Iceland, Liechtenstein, and Norway	2
Asia Pacific	3
Latin America	4
Rest of Europe, Middle East, Africa	5
Invalid region	9

Note: To find the region settings of the printer and toner cartridge, print the print quality test pages. From the home screen, touch **Settings** > **Troubleshooting** > **Print Quality Test Pages**.

Refilled regular [color] cartridge

The printer has detected a Lexmark Regular cartridge that has been refilled with non-genuine toner by a party other than Lexmark.

Select **OK** to continue.

All printer component life indicators are designed to function with Lexmark supplies and parts and may deliver unpredictable results when using supplies or parts in your Lexmark printer that are remanufactured by parties other than Lexmark.

For more information, see the printer statement of limited warranty.

Non-Lexmark supply

The printer has detected a non-Lexmark supply or part installed in the printer.

Your Lexmark printer is designed to function best with genuine Lexmark supplies and parts. Use of third-party supplies or parts may affect the performance, reliability, or life of the printer and its imaging components.

All life indicators are designed to function with Lexmark supplies and parts and may deliver unpredictable results if third-party supplies or parts are used. Imaging component usage beyond the intended life may damage your Lexmark printer or associated components.

Warning—Potential Damage: Use of third-party supplies or parts can affect warranty coverage. Damage caused by the use of third-party supplies or parts may not be covered by the warranty.

To accept any and all of these risks and to proceed with the use of non-genuine supplies or parts in your printer, touch and hold the error message on the display using two fingers for 15 seconds. When a confirmation dialog box appears, touch **Continue**.

If you do not want to accept these risks, then remove the third-party supply or part from your printer and install a genuine Lexmark supply or part. For more information, see "Using genuine Lexmark parts and supplies" on page 181.

If the printer does not print after clearing the error message, then reset the supply usage counter.

1. From the home screen, touch **Settings** > **Device** > **Maintenance** > **Configuration Menu** > **Supply Usage And Counters**.
2. Select the part or supply that you want to reset, and then touch **Start**.
3. Read the warning message, and then touch **Continue**.
4. Using two fingers, touch the display for 15 seconds to clear the message.

Note: If you are unable to reset the supply usage counters, then return the supply item to the place of purchase.

Paper feed problems

Envelope seals when printing

Action	Yes	No
Step 1 **a** Use an envelope that has been stored in a dry environment. **Note:** Printing on envelopes with high moisture content can seal the flaps. **b** Send the print job. Does the envelope seal when printing?	Go to step 2.	The problem is solved.
Step 2 **a** Make sure that paper type is set to Envelope. From the home screen, touch **Settings** > **Paper** > **Tray Configuration** > **Paper Size/Type**. **b** Send the print job. Does the envelope seal when printing?	Contact **customer support**.	The problem is solved.

Collated printing does not work

Action	Yes	No
Step 1 **a** From the home screen, touch **Settings** > **Print** > **Layout** > **Collate**. **b** Touch **On [1,2,1,2,1,2]**. **c** Print the document. Is the document collated correctly?	The problem is solved.	Go to step 2.
Step 2 **a** From the document that you are trying to print, open the Print dialog, and then select **Collate**. **b** Print the document. Is the document collated correctly?	The problem is solved.	Go to step 3.
Step 3 **a** Reduce the number of pages to print. **b** Print the document. Are the pages collated correctly?	The problem is solved.	Contact **customer support**.

Tray linking does not work

Action	Yes	No
Step 1 **a** Check if the trays contain the same paper size and paper type. **b** Check if the paper guides are positioned correctly. **c** Print the document. Do the trays link correctly?	The problem is solved.	Go to step 2.
Step 2 **a** From the home screen, touch **Settings** > **Paper** > **Tray Configuration** > **Paper Size/Type**. **b** Set the paper size and paper type to match the paper loaded in the linked trays. **c** Print the document. Do the trays link correctly?	The problem is solved.	Go to step 3.
Step 3 **a** Make sure that Tray Linking is set to Automatic. For more information, see "Linking trays" on page 48. **b** Print the document. Do the trays link correctly?	The problem is solved.	Contact **customer support**.

Paper frequently jams

Action	Yes	No
Step 1 **a** Remove the tray. **b** Check if paper is loaded correctly. **Notes:** • Make sure that the paper guides are positioned correctly. • Make sure that the stack height is below the maximum paper fill indicator. • Make sure to print on recommended paper size and type. **c** Insert the tray. **d** Print the document. Do paper jams occur frequently?	Go to step 2.	The problem is solved.

Action	Yes	No
Step 2 **a** From the home screen, touch **Settings** > **Paper** > **Tray Configuration** > **Paper Size/Type**. **b** Set the correct paper size and type. **c** Print the document. Do paper jams occur frequently?	Go to step 3.	The problem is solved.
Step 3 **a** Load paper from a fresh package. **Note:** Paper absorbs moisture due to high humidity. Store paper in its original wrapper until you are ready to use it. **b** Print the document. Do paper jams occur frequently?	Contact **customer support**.	The problem is solved.

Jammed pages are not reprinted

Action	Yes	No
a From the home screen, touch **Settings** > **Device** > **Notifications** > **Jam Content Recovery**. **b** In the Jam Recovery menu, touch **On** or **Auto**. **c** Print the document. Are the jammed pages reprinted?	The problem is solved.	Contact **customer support**.

E-mailing problems

Disabling the “SMTP server not set up” error message

From the control panel, navigate to **Settings** > **E-mail** > **E-mail Setup** > **Disable “SMTP Server not set up” error** > **On**.

To prevent the error from happening again, do one or more of the following:

- Update the printer firmware. For more information, see the “Updating firmware” section.
- Configure the email SMTP settings. For more information, see “Configuring the e-mail SMTP settings” on page 37.

Cannot send e-mails

Action	Yes	No
Step 1 Make sure that the e-mail SMTP settings are configured correctly. For more information, see "Configuring the e-mail SMTP settings" on page 37. Can you send an e-mail?	The problem is solved.	Go to step 2.
Step 2 Make sure that you are using the correct password. Depending on your e-mail service provider, use your account password, app password, or authentication password. For more information, see "Configuring the e-mail SMTP settings" on page 37. Can you send an e-mail?	The problem is solved.	Go to step 3.
Step 3 Make sure that the printer is connected to a network and that the network is connected to the Internet. Can you send an e-mail?	The problem is solved.	Contact **customer support**.

Faxing problems

Caller ID is not shown

Note: These instructions apply only to printers that support analog fax. For more information, see the **Setting up the printer to fax** section.

Action	Yes	No
Enable caller ID. From the home screen, touch **Settings** > **Fax** > **Fax Setup** > **Fax Receive Settings** > **Admin Controls** > **Enable Caller ID**. Does the caller ID appear?	The problem is solved.	Contact **customer support**.

Cannot send or receive faxes using analog fax

Action	Yes	No
Step 1 Resolve any error messages that appear on the display. Can you send or receive a fax?	The problem is solved.	Go to step 2.
Step 2 Make sure that the cable connections for the following equipment are secure: • Telephone • Handset • Answering machine Can you send or receive a fax?	The problem is solved.	Go to step 3.
Step 3 Check for a dial tone. • Call the fax number to check if it is working properly. • If you are using the On Hook Dial feature, then turn up the volume to check if you hear a dial tone. Can you hear a dial tone?	Go to step 5.	Go to step 4.
Step 4 Check the telephone wall jack. **a** Connect the analog telephone directly to the wall jack. **b** Listen for a dial tone. **c** If you do not hear a dial tone, then use a different telephone cable. **d** If you still do not hear a dial tone, then connect the analog telephone to a different wall jack. **e** If you hear a dial tone, then connect the printer to that wall jack. Can you send or receive a fax?	The problem is solved.	Go to step 5.

Action	Yes	No
Step 5 Check if the printer is connected to an analog phone service or to the correct digital connector. • If you are using an Integrated Services for Digital Network (ISDN) telephone service, then connect to an analog telephone port of an ISDN terminal adapter. For more information, contact your ISDN provider. • If you are using DSL, then connect to a DSL filter or router that supports analog use. For more information, contact your DSL provider. • If you are using a private branch exchange (PBX) telephone service, then make sure that you are connecting to an analog connection on the PBX. If none exists, then consider installing an analog telephone line for the fax machine. Can you send or receive a fax?	The problem is solved.	Go to step 6.
Step 6 Temporarily disconnect other equipment and disable other telephone services. **a** Disconnect other equipment (such as answering machines, computers, modems, or telephone line splitters) between the printer and the telephone line. **b** Disable call waiting and voice mail. For more information, contact your telephone company. Can you send or receive a fax?	The problem is solved.	Go to step 7.
Step 7 Scan the original document one page at a time. **a** Dial the fax number. **b** Scan the document. Can you send or receive a fax?	The problem is solved.	Contact **customer support**.

Can receive but not send faxes using analog fax

Action	Yes	No
Step 1 Load an original document properly into the ADF tray or on the scanner glass. Can you send faxes?	The problem is solved.	Go to step 2.
Step 2 Set up the shortcut number properly. • Check if the shortcut number is set for the telephone number that you want to dial. • Dial the telephone number manually. Can you send faxes?	The problem is solved.	Contact **customer support**.

Can send but not receive faxes using analog fax

Action	Yes	No
Step 1 Make sure that the paper source is not empty. Can you receive faxes?	The problem is solved.	Go to step 2.
Step 2 Check the ring count delay settings. From the home screen, touch **Settings** > **Fax** > **Fax Setup** > **Fax Receive Settings** > **Rings to Answer**. Can you receive faxes?	The problem is solved.	Go to step 3.
Step 3 If the printer is printing blank pages, then see "Blank or white pages" on page 226. Can you receive faxes?	The problem is solved.	Contact **customer support**.

Cannot set up etherFAX

Action	Yes	No
Step 1 Check the printer connectivity. **a** Print the Network Setup Page. From the home screen, touch **Settings** > **Reports** > **Network** > **Network Setup Page**. **b** Check the network status. Is the printer connected to the network?	Go to step 3.	Go to step 2.

Action	Yes	No
Step 2 Make sure that the printer is connected to a network and that the network is connected to the Internet. Can you set up etherFAX?	The problem is solved.	Go to step 3.
Step 3 Make sure that etherFAX is set up correctly. For more information, see "Setting up the fax function using etherFAX" on page 31. Can you set up etherFAX?	The problem is solved.	Go to **https://www.etherfax.net/lexmark**.

Cannot send or receive faxes using etherFAX

Action	Yes	No
Step 1 Make sure that the printer is connected to a network and that the network is connected to the Internet. Can you send or receive faxes using etherFAX?	The problem is solved.	Go to step 2.
Step 2 Make sure that etherFAX is set up correctly. **a** From the home screen, touch **Settings** > **Fax** > **Fax Setup** > **General Fax Settings**. **b** Make sure that you have the correct fax number. **c** Make sure that Fax Transport is set to etherFAX. **Notes:** • This menu shows up only when more than one fax transport is available. • If the printer only has etherFAX installed, then it is automatically configured. Can you send or receive faxes using etherFAX?	The problem is solved.	Go to step 3.
Step 3 Split large documents into smaller file sizes. Can you send or receive faxes using etherFAX?	The problem is solved.	Go to **https://www.etherfax.net/lexmark**.

Poor fax print quality

Action	Yes	No
Step 1 Make sure that there are no print quality defects. **a** From the home screen, touch **Settings** > **Troubleshooting** > **Print Quality Test Pages**. **b** Correct any print quality defects. For more information, see "Print quality is poor" on page 226. Is the fax print quality satisfactory?	The problem is solved.	Go to step 2.
Step 2 If you are using an analog fax, then decrease the incoming fax transmission speed. **a** From the home screen, touch **Settings** > **Fax** > **Fax Setup** > **Fax Receive Settings** > **Admin Controls**. **b** In the Max Speed menu, select a lower transmission speed. Is the fax print quality satisfactory?	The problem is solved.	Contact **customer support**.

Missing information on the fax cover page

Action	No	Yes
a Turn off the printer, wait for about 10 seconds, and then turn on the printer. **b** Send or retrieve the fax. Is there missing information on the fax cover page?	The problem is solved.	Contact **customer support**.

Cannot send the fax cover page from the computer

Action	Yes	No
Step 1 **a** Make sure that the print driver is updated. For more information, see "Installing the printer software" on page 49. **b** Send the fax. Can you send the fax cover page?	The problem is solved.	Go to step 2.

Action	Yes	No
Step 2 **a** From the document that you are trying to fax, open the Print dialog. **b** Select the printer, and then click **Properties**, **Preferences**, **Options**, or **Setup**. **c** Click **Fax**, and then clear the **Always display settings prior to faxing** setting. **d** Send the fax. Can you send the fax cover page?	The problem is solved.	Contact **customer support**.

Scanning problems

Cannot scan to a computer

Action	Yes	No
Step 1 Perform a copy job. Is the copy job successful?	Go to step 3.	Go to step 2.
Step 2 **a** Turn off the printer, wait for about 10 seconds, and then turn it back on. **b** Scan the document. Can you scan the document to a computer?	The problem is solved.	Go to step 3.
Step 3 Check the printer connectivity. **a** Print the Network Setup Page. From the home screen, touch **Settings** > **Reports** > **Network** > **Network Setup Page**. **b** Check the network status. Is the printer connected to the network?	Go to step 5.	Go to step 4.
Step 4 **a** Connect the printer to the network. **b** Scan the document. Can you scan the document to a computer?	The problem is solved.	Go to step 5.

Action	Yes	No
Step 5 **a** Make sure that the printer and the computer are connected to the same network. **b** Scan the document. Can you scan the document to a computer?	The problem is solved.	Contact **customer support**.

Cannot scan to a network folder

Action	Yes	No
Step 1 **a** Create a network folder shortcut. **b** Scan a document using the shortcut. For more information, see "Scanning to a network folder" on page 93. Can you scan a document and save it to a network folder?	The problem is solved.	Go to step 2.
Step 2 Make sure that the network folder path and format are correct. For example, **`//server_hostname/foldername/path`**, where ***`server_hostname`*** is a fully qualified domain (FQDN) or IP address. Is the network folder path and format correct?	Go to step 3.	Go to step 4.
Step 3 Make sure that you have a write access permission to the network folder. Can you scan a document and save it to a network folder?	The problem is solved.	Go to step 4.

Action	Yes	No
Step 4 Update the network folder shortcut. **a** Open a web browser, and then type the printer IP address in the address field. **Notes:** • View the printer IP address on the home screen. The IP address appears as four sets of numbers separated by periods, such as 123.123.123.123. • If you are using a proxy server, then temporarily disable it to load the web page correctly. **b** Click **Shortcuts**, and then select a shortcut. **Note:** If you have multiple shortcut types, then select **Network Folder**. **c** In the Share Path field, type the network folder path. **Notes:** • If your share path is **`\\server_hostname\foldername\path`**, then type **`//server_hostname/foldername/path`**. • Make sure that you use forward slashes when typing the share path. **d** From the Authentication menu, select your authentication method. **Note:** If Authentication is set to “Use assigned username and password,” then in the User Name and Password fields, type your credentials. **e** Click **Save**. Can you scan a document and save it to a network folder?	The problem is solved.	Go to step 5.
Step 5 Make sure that the printer and the network folder are connected to the same network. Can you scan a document and save it to a network folder?	The problem is solved.	Contact **customer support**.

Partial copies of document or photo

Action	Yes	No
Step 1 **a** Make sure that the document or photo is loaded facedown on the upper left corner of the scanner glass. **b** Copy the document or photo. Is the document or photo copied correctly?	The problem is solved.	Go to step 2.

Action	Yes	No
Step 2 **a** Match the paper size setting and the paper loaded in the tray. **b** Copy the document or photo. Is the document or photo copied correctly?	The problem is solved.	Contact **customer support**.

Poor copy quality

Action	Yes	No
Step 1 **a** Clean the scanner glass and the ADF glass with a damp, soft, lint-free cloth. If your printer has a second ADF glass inside the ADF, then also clean that glass. For more information, see "Cleaning the scanner" on page 210. **b** Make sure that the document or photo is loaded facedown on the upper left corner of the scanner glass. **c** Copy the document or photo. Is the copy quality satisfactory?	The problem is solved.	Go to step 2.
Step 2 **a** Check the quality of the original document or photo. **b** Adjust the scan quality settings. **c** Copy the document or photo. Is the copy quality satisfactory?	The problem is solved.	Contact **customer support**.

Vertical dark streaks on output when scanning from the ADF

Vertical dark streaks on output when scanning from the ADF

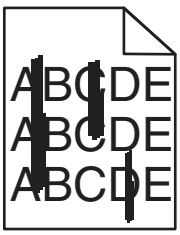

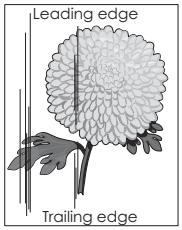

Action	Yes	No
a Open the scanner cover. **b** Using a damp, soft, lint-free cloth, wipe the ADF glass and the ADF glass pad. **c** Close the scanner cover. **d** Scan the document. Do vertical streaks appear on scanned documents?	Contact **customer support**.	The problem is solved.

Jagged image or text when scanning from the ADF

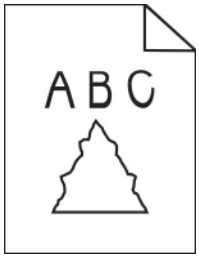

Action	Yes	No
a Load 50 sheets of clean, plain paper into the ADF. **Note:** The plain paper helps clean or remove dust and other coating from the ADF feed rollers. **b** From the home screen, touch ▶. **c** Load an original document into the ADF. **d** Scan the document. Do jagged images or texts appear on the output?	Contact **customer support**.	The problem is solved.

Scan job was not successful

Action	Yes	No
Step 1 Check the cable connections. **a** Make sure that the Ethernet or USB cable is securely connected to the computer and the printer. **b** Scan the document. Is the scan job successful?	The problem is solved.	Go to step 2.

Action	Yes	No
Step 2 Check the file that you want to scan. **a** Make sure that the file name is not already used in the destination folder. **b** Make sure that the document or photo you want to scan is not open in another application. **c** Scan the document. Is the scan job successful?	The problem is solved.	Go to step 3.
Step 3 **a** Make sure that the Append time stamp or the Overwrite existing file check box is selected in the destination configuration settings. **b** Scan the document. Is the scan job successful?	The problem is solved.	Contact **customer support**.

Scanner does not close

Action	Yes	No
Remove obstructions that keep the scanner cover open. Did the scanner cover close correctly?	The problem is solved.	Contact **customer support**.

Scanning takes too long or freezes the computer

Action	Yes	No
Close all applications that are interfering with the scan. Does scanning take too long or freeze the computer?	Contact **customer support**.	The problem is solved.

Scanner does not respond

Action	Yes	No
Step 1 **a** Check if the power cord is connected properly to the printer and the electrical outlet. ⚠ **CAUTION—POTENTIAL INJURY:** To avoid the risk of fire or electrical shock, connect the power cord to an appropriately rated and properly grounded electrical outlet that is near the product and easily accessible. **b** Copy or scan the document. Is the scanner responding?	The problem is solved.	Go to step 2.
Step 2 **a** Check if the printer is turned on. **b** Resolve any error messages that appear on the display. **c** Copy or scan the document. Is the scanner responding?	The problem is solved.	Go to step 3.
Step 3 **a** Turn off the printer, wait for about 10 seconds, and then turn the printer on. **b** Copy or scan the document. Is the scanner responding?	The problem is solved.	Contact **customer support**.

Adjusting scanner registration

1. From the home screen, touch **Settings** > **Device** > **Maintenance** > **Configuration Menu** > **Scanner Configuration** > **Scanner Manual Registration**.
2. In the Print Quick Test menu, touch **Start**.
3. Place the Print Quick Test page on the scanner glass, and then touch **Flatbed Registration**.
4. In the Copy Quick Test menu, touch **Start**.
5. Compare the Copy Quick Test page with the original document.

   Note: If the margins of the test page are different from the original document, then adjust Left Margin and Top Margin.
6. Repeat step 4 and step 5 until the margins of the Copy Quick Test page closely match the original document.

Adjusting ADF registration

1. From the home screen, touch **Settings** > **Device** > **Maintenance** > **Configuration Menu** > **Scanner Configuration** > **Scanner Manual Registration**.
2. In the Print Quick Test menu, touch **Start**.

3 Place the Print Quick Test page on the ADF tray.

4 Touch **Front ADF Registration** or **Rear ADF Registration**.

Notes:

- To align Front ADF Registration, place the test page faceup, short edge first into the ADF.
- To align Rear ADF Registration, place the test page facedown, short edge first into the ADF.

5 In the Copy Quick Test menu, touch **Start**.

6 Compare the Copy Quick Test page with the original document.

Note: If the margins of the test page are different from the original document, then adjust Horizontal Adjust and Top Margin.

7 Repeat step 5 and step 6 until the margins of the Copy Quick Test page closely match the original document.

Contacting customer support

Before contacting customer support, make sure to have the following information:

- Printer problem
- Error message
- Printer model type and serial number

Go to **http://support.lexmark.com** to receive e-mail or chat support, or browse through the library of manuals, support documentation, drivers, and other downloads.

Technical support via telephone is also available. In the U.S. or Canada, call 1-800-539-6275. For other countries or regions, go to **the international support contact directory**.

Recycle and dispose

Recycling Lexmark products

To return Lexmark products for recycling:

1. Go to **www.lexmark.com/recycle**.
2. Select your country or region.
3. Select a recycling program.
4. Follow the instructions on the screen.

Recycling Lexmark packaging

Lexmark continually strives to minimize packaging. Less packaging helps to ensure that Lexmark printers are transported in the most efficient and environmentally sensitive manner and that there is less packaging to dispose of. These efficiencies result in fewer greenhouse emissions, energy savings, and natural resource savings. Lexmark also offers recycling of packaging components in some countries or regions. For more information, go to **www.lexmark.com/recycle**, and then choose your country or region. Information on available packaging recycling programs is included with the information on product recycling.

Lexmark cartons are 100% recyclable where corrugated recycling facilities exist. Facilities may not exist in your area.

The foam used in Lexmark packaging is recyclable where foam recycling facilities exist. Facilities may not exist in your area.

When you return a cartridge to Lexmark, you can reuse the box that the cartridge came in. Lexmark recycles the box.

Notices

Product information

Product name:

Lexmark MX532adwe, Lexmark MX632adwe, Lexmark XM3350 MFPs

Machine type:

7020

Models:

476, 486, 676, 686, 689

Edition notice

July 2024

The following paragraph does not apply to any country where such provisions are inconsistent with local law: LEXMARK INTERNATIONAL, INC., PROVIDES THIS PUBLICATION “AS IS” WITHOUT WARRANTY OF ANY KIND, EITHER EXPRESS OR IMPLIED, INCLUDING, BUT NOT LIMITED TO, THE IMPLIED WARRANTIES OF MERCHANTABILITY OR FITNESS FOR A PARTICULAR PURPOSE. Some states do not allow disclaimer of express or implied warranties in certain transactions; therefore, this statement may not apply to you.

This publication could include technical inaccuracies or typographical errors. Changes are periodically made to the information herein; these changes will be incorporated in later editions. Improvements or changes in the products or the programs described may be made at any time.

References in this publication to products, programs, or services do not imply that the manufacturer intends to make these available in all countries in which it operates. Any reference to a product, program, or service is not intended to state or imply that only that product, program, or service may be used. Any functionally equivalent product, program, or service that does not infringe any existing intellectual property right may be used instead. Evaluation and verification of operation in conjunction with other products, programs, or services, except those expressly designated by the manufacturer, are the user’s responsibility.

For Lexmark technical support, go to **http://support.lexmark.com**.

For information on Lexmark's privacy policy governing the use of this product, go to **www.lexmark.com/privacy**.

For information on supplies and downloads, go to **www.lexmark.com**.

© **2023 Lexmark International, Inc.**

All rights reserved.

GOVERNMENT END USERS

The Software Program and any related documentation are "Commercial Items," as that term is defined in 48 C.F.R. 2.101, "Computer Software" and "Commercial Computer Software Documentation," as such terms are used in 48 C.F.R. 12.212 or 48 C.F.R. 227.7202, as applicable. Consistent with 48 C.F.R. 12.212 or 48 C.F.R. 227.7202-1 through 227.7207-4, as applicable, the Commercial Computer Software and Commercial Software

Documentation are licensed to the U.S. Government end users (a) only as Commercial Items and (b) with only those rights as are granted to all other end users pursuant to the terms and conditions herein.

Trademarks

Lexmark, the Lexmark logo, and MarkNet are trademarks or registered trademarks of Lexmark International, Inc. in the United States and/or other countries.

Gmail, Android, Google Play, and Google Chrome are trademarks of Google LLC.

Macintosh, macOS, Safari, and AirPrint are trademarks of Apple Inc., registered in the U.S. and other countries. App Store and iCloud are service marks of Apple Inc., registered in the U.S. and other countries. Use of the Works with Apple badge means that an accessory has been designed to work specifically with the technology identified in the badge and has been certified by the developer to meet Apple performance standards.

Microsoft, Internet Explorer, Microsoft 365, Microsoft Edge, Outlook, and Windows are trademarks of the Microsoft group of companies.

The Mopria® word mark is a registered and/or unregistered trademark of Mopria Alliance, Inc. in the United States and other countries. Unauthorized use is strictly prohibited.

PCL® is a registered trademark of the Hewlett-Packard Company. PCL is Hewlett-Packard Company's designation of a set of printer commands (language) and functions included in its printer products. This printer is intended to be compatible with the PCL language. This means the printer recognizes PCL commands used in various application programs, and that the printer emulates the functions corresponding to the commands.

PostScript is a registered trademark of Adobe Systems Incorporated in the United States and/or other countries.

Wi-Fi® and Wi-Fi Direct® are registered trademarks of Wi-Fi Alliance®.

All other trademarks are the property of their respective owners.

Licensing notices

All licensing notices associated with this product can be viewed from the CD:\NOTICES directory of the installation software CD.

Noise emission levels

The following measurements were made in accordance with ISO 7779 and reported in conformance with ISO 9296.

Note: Some modes may not apply to your product.

1-meter average sound pressure, dBA	
Printing	One-sided: 55 Two-sided: 55 (MX532adwe); 54 (MX632adwe, XM3350)
Scanning	52
Copying	57
Ready	15

Values are subject to change. See **www.lexmark.com** for current values.

Waste from Electrical and Electronic Equipment (WEEE) directive

The WEEE logo signifies specific recycling programs and procedures for electronic products in countries of the European Union. We encourage the recycling of our products.

If you have further questions about recycling options, visit the Lexmark Web site at **www.lexmark.com** for your local sales office phone number.

India E-Waste notice

This product including components, consumables, parts and spares complies with the “India E-Waste Rules” and prohibits use of lead, mercury, hexavalent chromium, polybrominated biphenyls or polybrominated diphenyl ethers in concentrations exceeding 0.1% by weight and 0.01% by weight for cadmium, except for the exemption set in the Rule.

Lithium-ion rechargeable battery

This product may contain a coin-cell, lithium-ion rechargeable battery, which should only be removed by a trained technician. Crossed-out wheelie bin means the product should not be discarded as unsorted waste but must be sent to separate collection facilities for recovery and recycling. In the event the battery is removed, do

not dispose of the battery in your household waste. There may be separate collection systems for batteries in your local community, such as a battery-recycling drop-off location. The separate collection of waste batteries assures appropriate treatment of waste including reuse and recycling and prevents any potential negative effects on human health and environment. Please responsibly dispose of the batteries.

Regulation (EU) 2023/1542

Regulation (EU) 2023/1542

This product may contain a coin-cell lithium rechargeable battery. This battery complies with Regulation (EU) 2023/1542. Compliance is indicated by the CE marking:

This product may contain one of the following coin-cell batteries:

- Battery identification: Seiko Model Number MS621FE
  Manufacturer: Seiko Instruments Inc.
  Manufacturer address: 8, Nakase 1-chome, Mihama-ku, Chiba-shi, Chiba 261-8507, Japan
- Battery identification: Panasonic Model Number ML621
  Manufacturer: Panasonic Energy Co., Ltd.
  Manufacturer address: 1-1 Matsushita-cho, Moriguchi City, Osaka 570-8511, Japan
- Battery identification: FDK Model Number ML621
  Manufacturer: FDK Corporation
  Manufacturer address: Shibaura Crystal Shinagawa, 1-6-41 Konan, Minato-ku, Tokyo 108-8212 Japan

Environmental labeling for packaging

Per Commission Regulation Decision 97/129/EC Legislative Decree 152/2006, the product packaging may contain one or more of the following symbols.

20 PAP	This symbol indicates that the packaging may contain corrugated fiberboard.
21 PAP	This symbol indicates that the packaging may contain non-corrugated fiberboard.

22 PAP	This symbol indicates that the packaging may contain paper.

For more information, go to **www.lexmark.com/recycle**, and then choose your country or region. Information on available packaging recycling programs is included with the information on product recycling.

Product disposal

Do not dispose of the printer or supplies in the same manner as normal household waste. Consult your local authorities for disposal and recycling options.

Returning Lexmark cartridges for reuse or recycling

The Lexmark Cartridge Collection Program allows you to return used cartridges for free to Lexmark for reuse or recycling. One hundred percent of the empty cartridges returned to Lexmark are either reused or demanufactured for recycling. The boxes used to return the cartridges are also recycled.

To return Lexmark cartridges for reuse or recycling, do the following:

1. Go to **www.lexmark.com/recycle**.
2. Select your country or region.
3. Select **Lexmark Cartridge Collection Program**.
4. Follow the instructions on the screen.

Static sensitivity notice

Static sensitivity notice

This symbol identifies static-sensitive parts. Do not touch the areas near these symbols without first touching a metal surface in an area away from the symbol.

To prevent damage from electrostatic discharge when performing maintenance tasks such as clearing paper jams or replacing supplies, touch any exposed metal frame of the printer before accessing or touching interior areas of the printer even if the symbol is not present.

ENERGY STAR

Any Lexmark product bearing the ENERGY STAR® emblem on the product or on a start-up screen is certified to comply with Environmental Protection Agency (EPA) ENERGY STAR requirements as of the date of manufacture.

Temperature information

Operating temperature and relative humidity	10 to 32.2°C (50 to 90°F) and 15 to 80% RH 15.6 to 32.2°C (60 to 90°F) and 8 to 80% RH Maximum wet-bulb temperature[2]: 22.8°C (73°F) Non-condensing environment
Printer / cartridge / imaging unit long-term storage[1]	15.6 to 32.2°C (60 to 90°F) and 8 to 80% RH Maximum wet-bulb temperature[2]: 22.8°C (73°F)
Printer / cartridge / imaging unit short-term shipping	-40 to 40°C (-40 to 104°F)

[1] Supplies shelf life is approximately 2 years. This is based on storage in a standard office environment at 22°C (72°F) and 45% humidity.

[2] Wet-bulb temperature is determined by the air temperature and the relative humidity.

Laser notice

The printer is certified in the U.S. to conform to the requirements of DHHS 21 CFR, Chapter I, Subchapter J for Class I (1) laser products, and elsewhere is certified as a Class 1 consumer laser product conforming to the requirements of IEC 60825-1:2014, EN 60825-1:2014+A11:2021, and EN 50689:2021.

Class I laser products are not considered to be hazardous. The laser system and printer are designed so there is never any human access to laser radiation above a Class I level during normal operation, user maintenance, or prescribed service conditions. The printer has a non-serviceable printhead assembly that contains a laser with the following specifications:

Class: IIIb (3b) AlGaInP

Nominal output power (milliwatts): 15

Wavelength (nanometers): 650–670

Power consumption

Product power consumption

The following table documents the power consumption characteristics of the product.

Note: Some modes may not apply to your product.

Mode	Description	Power consumption (Watts)
Printing	The product is generating hard-copy output from electronic inputs.	One-sided: 649 (MX532adwe); 662 (MX632adwe, XM3350) Two-sided: 396 (MX532adwe); 406 (MX632adwe, XM3350)
Copy	The product is generating hard-copy output from hard-copy original documents.	684
Scan	The product is scanning hard-copy documents.	23.5 (MX532adwe); 24.8 (MX632adwe, XM3350)
Ready	The product is waiting for a print job.	13.4 (MX532adwe); 15.3 (MX632adwe, XM3350)
Sleep Mode	The product is in a high-level energy-saving mode.	1.0 (MX532adwe); 1.1 (MX632adwe, XM3350)
Hibernate	The product is in a low-level energy-saving mode.	0.1
Off	The product is plugged into an electrical outlet, but the power switch is turned off.	0.1

The power consumption levels listed in the previous table represent time-averaged measurements. Instantaneous power draws may be substantially higher than the average.

Values are subject to change. See **www.lexmark.com** for current values.

Sleep Mode

This product is designed with an energy-saving mode called *Sleep Mode*. The Sleep Mode saves energy by lowering power consumption during extended periods of inactivity. The Sleep Mode is automatically engaged after this product is not used for a specified period of time, called the *Sleep Mode Timeout*.

Factory default Sleep Mode Timeout for this product (in minutes):	15

By using the configuration menus, the Sleep Mode Timeout can be modified between 1 minute and 120 minutes, or between 1 minute and 114 minutes, depending on the printer model. If the printer speed is less than or equal to 30 pages per minute, then you can set the timeout only up to 60 minutes or 54 minutes, depending on the printer model. Setting the Sleep Mode Timeout to a low value reduces energy consumption, but may increase the response time of the product. Setting the Sleep Mode Timeout to a high value maintains a fast response, but uses more energy.

Some models support a *Deep Sleep Mode*, which further reduces power consumption after longer periods of inactivity.

Hibernate Mode

This product is designed with an ultra-low power operating mode called *Hibernate mode*. When operating in Hibernate Mode, all other systems and devices are powered down safely.

The Hibernate mode can be entered in any of the following methods:

- Using the Hibernate Timeout
- Using the Schedule Power modes

Factory default Hibernate Timeout for this product in all countries or regions	3 days

The amount of time the printer waits after a job is printed before it enters Hibernate mode can be modified between one hour and one month.

Notes on EPEAT-registered imaging equipment products:

- Standby power level occurs in Hibernate or Off mode.
- The product shall automatically power down to a standby power level of ≤ 1 W. The auto standby function (Hibernate or Off) shall be enabled at product shipment.

Off mode

If this product has an off mode which still consumes a small amount of power, then to completely stop product power consumption, disconnect the power supply cord from the electrical outlet.

Total energy usage

Total energy usage

It is sometimes helpful to estimate the total product energy usage. Since power consumption claims are provided in power units of Watts, the power consumption should be multiplied by the time the product spends in each mode in order to calculate energy usage. The total product energy usage is the sum of each mode's energy usage.

Applicability of Regulation (EU) 2019/2015 and (EU) 2019/2020

Per Commission Regulation (EU) 2019/2015 and (EU) 2019/2020, the light source contained within this product or its component is intended to be used for Image Capture or Image Projection only, and is not intended for use in other applications.

The UK Product Security and Telecommunications Infrastructure Act 2022 (PSTI Act)—Summary Statement of Compliance

Lexmark International Inc., 740 West New Circle Road, Lexington, KY 40550 USA, declares that this product complies with the applicable security requirements in Schedule 1 of The Product Security and Telecommunications Infrastructure (Security Requirements for Relevant Connectable Products) Regulations 2023. The defined support period for this product can be found at the following web page: **https://www.lexmark.com/firmware-eos**.

A copy of the Statement of Compliance is available for download at the following web page: **https://www.lexmark.com/en_us/about/regulatory-compliance/all-regulatory-docs.html**.

Thailand NBTC technical standards conformity statement

คำประกาศเรื่องการเป็นไปตามมาตรฐานทางเทคนิคของ กสทช. ประเทศไทย

This telecommunication equipment conforms to the technical standards or requirements of NBTC.

เครื่องโทรคมนาคมและอุปกรณ์นี้มีความสอดคล้องตามมาตรฐานหรือข้อกำหนดทางเทคนิคของ กสทช.

Regulatory notices for telecommunication terminal equipment

Regulatory notices for telecommunication terminal equipment

This section contains regulatory information pertaining to products that contain the analog facsimile card:

Lexmark Regulatory Type/Model Number:

LEX-M14-002 or LEX-M03-002

Notice to users of the US telephone network: FCC requirements

This equipment complies with Part 68 of the FCC rules and the requirements adopted by the Administrative Council for Terminal Attachments (ACTA). On the back of this equipment is a label that contains, among other information, a product identifier in the format US:AAAEQ##TXXXX. If requested, this number must be provided to your telephone company.

This equipment uses the RJ-11C Universal Service Order Code (USOC) jack.

A plug and jack used to connect this equipment to the premises' wiring and telephone network must comply with the applicable FCC Part 68 rules and requirements adopted by the ACTA. Use a compliant telephone cord (RJ-11) that is 26 AWG or larger when connecting this product to the public switched telephone network. See your setup documentation for more information.

The Ringer Equivalence Number (REN) is used to determine the number of devices that may be connected to a telephone line. Excessive RENs on a telephone line may result in the devices not ringing in response to an incoming call. In most but not all areas, the sum of RENs should not exceed five (5.0). To be certain of the number of devices that may be connected to a line, as determined by the total RENs, contact your local telephone company. For products approved after July 23, 2001, the REN for this product is part of the product identifier that has the format US:AAAEQ##TXXXX. The digits represented by ## are the REN without a decimal point (for example, 03 is a REN of 0.3). For earlier products, the REN is shown separately on the label.

If this equipment causes harm to the telephone network, the telephone company will notify you in advance that temporary discontinuance of service may be required. If advance notice is not practical, the telephone company will notify the customer as soon as possible. You will also be advised of your right to file a complaint with the FCC.

The telephone company may make changes in its facilities, equipment, operations or procedures that could affect the operation of this equipment. If this happens, the telephone company will provide advance notice in order for you to make necessary modifications to maintain uninterrupted service.

If you experience trouble with this equipment, for repair or warranty information, contact Lexmark International, Inc. at **www.lexmark.com** or your Lexmark representative. If the equipment is causing harm to the telephone network, the telephone company may request that you disconnect the equipment until the problem is resolved.

This equipment contains no user serviceable parts. For repair and warranty information, contact Lexmark International, Inc. See the previous paragraph for contact information.

Connection to party line service is subject to state tariffs. Contact the state public utility commission, public service commission, or corporation commission for information.

If your home has specially wired alarm equipment connected to the telephone line, ensure the installation of this equipment does not disable your alarm equipment. If you have questions about what will disable alarm equipment, consult your telephone company or a qualified installer.

The Telephone Consumer Protection Act of 1991 makes it unlawful for any person to use a computer or other electronic device, including fax machines, to send any message unless said message clearly contains in a margin at the top or bottom of each transmitted page or on the first page of the transmission, the date and time it is sent and an identification of the business or other entity, or other individual sending the message, and the telephone number of the sending machine or such business, other entity, or individual. (The telephone number provided may not be a 900 number or any other number for which charges exceed local or long-distance transmission charges.)

See your user documentation in order to program this information into your fax machine.

Notice to users of the Canadian telephone network

This product meets the applicable Innovation, Science and Economic Development Canada technical specifications.

The Ringer Equivalence Number (REN) indicates the maximum number of devices allowed to be connected to a telephone interface. The termination of an interface may consist of any combination of devices subject only to the requirement that the sum of the RENs of all the devices not exceed five. The REN is located on the product label.

This equipment uses CA11A telephone jacks.

Avis réservé aux utilisateurs du réseau téléphonique du Canada

Ce produit est conforme aux spécifications techniques d'Innovation, Sciences et Développement économique Canada.

Le numéro REN (ringer equivalence number : numéro d'équivalence de sonnerie) indique le nombre maximum d'appareils pouvant être connectés à l'interface téléphonique. En bout de ligne, le nombre d'appareils qui peuvent être connectés n'est pas directement limité, mais la somme des REN de ces appareils ne doit pas dépasser cinq. Le numéro REN est indiqué sur l'étiquette produit.

Cet équipement utilise des prises de téléphone CA11A.

Notice to users of the New Zealand telephone network

The following are special conditions for the Facsimile User Instructions. The grant of a telepermit for any item of terminal equipment indicates only that Spark has accepted that the item complies with minimum conditions for connection to its network. It indicates no endorsement of the product by Spark, nor does it provide any sort of warranty. Above all, it provides no assurance that any item will work correctly in all respects with another

item of telepermitted equipment of a different make or model, nor does it imply that any product is compatible with all of Spark's network services.

This equipment shall not be set up to make automatic calls to the Spark “111” Emergency Service.

This equipment may not provide for the effective hand-over of a call to another device connected to the same line.

This equipment should not be used under any circumstances that may constitute a nuisance to other Spark customers.

This equipment is not capable, under all operating conditions, of correct operation at the higher speeds for which it is designed. Spark will accept no responsibility should difficulties arise in such circumstances.

The decadic (or pulse) dialing on this device is unsuitable for use on the Spark network in New Zealand.

For correct operation, the total of all the Ringer Equivalence Numbers (RENs) of all parallel devices connected to the same telephone line may not exceed 5. The REN of this device is located on the label.

This device uses an RJ-11C modular connector. Contact your point of purchase if a BT adapter is required. The Lexmark part number is 80D1873.

Some parameters required for compliance with Spark's telepermit requirements are dependent on the equipment associated with this device. The associated equipment shall be set to operate within the following limits for compliance to Spark's specifications:

- There shall be no more than 10 call attempts to the same number within any 30 minute period for any single manual call initiation, and
- The equipment shall go on-hook for a period of not less than 30 seconds between the end of one attempt and the beginning of the next call attempt.
- The equipment shall be set to ensure that automatic calls to different numbers are spaced such that there is not less than 5 seconds between the end of one call attempt and the beginning of another.

Japanese telecom notice

The installed optional modem is in compliance with Japanese Telecommunication Law and has been Certified by JATE, with the following Certification Number:

A18-0046001 or A11-0160001JP

	Lexmark International, Inc.
	LEX-M14-002 or LEX-M03-002
	A18-0046001 or A11-0160001JP

Using this product in Switzerland

This product requires a Swiss billing tone filter (Lexmark part number 80D1877) to be installed on any line which receives metering pulses in Switzerland.

Utilisation de ce produit en Suisse

Cet appareil nécessite l'utilisation d'un filtre de tonalité de facturation suisse (nº de référence Lexmark : 80D1877) devant être installé sur toute ligne recevant des impulsions de comptage en Suisse.

Verwendung dieses Produkts in der Schweiz

Für dieses Produkt muss ein schweizerischer Billing Tone Filter zur Zählzeichenübertragung (Lexmark Teilenummer 80D1877) für jede Leitung installiert werden, über die in der Schweiz Zeitsteuertakte übertragen werden.

Uso del prodotto in Svizzera

Questo prodotto richiede un filtro toni Billing svizzero, (codice Lexmark 80D1877) da installare su tutte le linee che ricevono impulsi remoti in Svizzera.

Regulatory notices for wireless products

This section contains regulatory information that applies only to wireless models.

If in doubt as to whether your model is a wireless model, then see "Wireless support" on page 71.

Modular component notice

Wireless models contain the following modular component:

Lexmark MarkNet N8450 / AzureWave AW-CM467-SUR; FCC ID:TLZ-CM467; IC:6100A-CM467

To determine which modular components are installed in your particular product, refer to the labeling on your actual product.

Exposure to radio frequency radiation

The radiated output power of this device is far below the radio frequency exposure limits of the FCC and other regulatory agencies. A minimum separation of 20 cm (8 inches) must be maintained between the antenna and any persons for this device to satisfy the RF exposure requirements of the FCC and other regulatory agencies.

Innovation, Science and Economic Development Canada

This device complies with Innovation, Science and Economic Development Canada license-exempt RSS standards. Operation is subject to the following two conditions: (1) this device may not cause interference, and (2) this device must accept any interference, including interference that may cause undesired operation of the device.

Innovation, Sciences et Développement économique Canada

Cet appareil est conforme aux normes RSS exemptes de licence d'Innovation, Sciences et Développement économique Canada. Son fonctionnement est soumis aux deux conditions suivantes : (1) cet appareil ne doit pas causer d'interférences et (2) il doit accepter toutes les interférences, y compris les celles qui peuvent entraîner un fonctionnement indésirable.

European Community (EC) directives conformity

This product is in conformity with the protection requirements of EC Council directive 2014/53/EU on the approximation and harmonization of the laws of the Member States relating to radio equipment.

The manufacturer of this product is: Lexmark International, Inc., 740 West New Circle Road, Lexington, KY, 40550 USA. The EEA/EU authorized representative is: Lexmark International Technology Hungária Kft., 8 Lechner Ödön fasor, Millennium Tower III, 1095 Budapest HUNGARY. The EEA/EU Importer is: Lexmark International Technology S.à.r.l. 20, Route de Pré-Bois, ICC Building, Bloc A, CH-1215 Genève, Switzerland. A declaration of conformity to the requirements of the Directives is available upon request from the Authorized Representative or may be obtained at **www.lexmark.com/en_us/about/regulatory-compliance/european-union-declaration-of-conformity.html**.

Compliance is indicated by the CE marking:

Restrictions

This radio equipment is restricted to indoor use only. Outdoor use is prohibited. This restriction applies to all the countries listed in the table below:

AT	BE	BG	CH	CY	CZ	DE	DK	EE
EL	ES	FI	FR	HR	HU	IE	IS	IT
LI	LT	LU	LV	MT	NL	NO	PL	PT
RO	SE	SI	SK	TR	UK (NI)			

EU and other countries statement of radio transmitter operational frequency bands and maximum RF power

This radio product transmits in either the 2.4GHz (2.412–2.472 GHz in the EU) or 5GHz (5.15–5.35, 5.47–5.725 in the EU) bands. The maximum transmitter EIRP power output, including antenna gain, is ≤ 20dBm for both bands.

United Kingdom (UK) conformity

United Kingdom (UK) conformity

This product is in conformity with the protection requirements of the Radio Equipment Regulations 2017.

The manufacturer of this product is: Lexmark International, Inc., 740 West New Circle Road, Lexington, KY, 40550 USA. The UK Importer is: Lexmark International Ltd, Quantum House, 60 Norden Road, Maidenhead SL6 4AY, United Kingdom. A declaration of conformity is available upon request from the UK Importer or may be obtained at **www.lexmark.com/en_us/about/regulatory-compliance/uk-declaration-of-conformity.html**.

Compliance is indicated by the UKCA marking:

Restrictions or requirements in the UK

This radio equipment is restricted to indoor use only. Outdoor use is prohibited.

UK statement of radio transmitter operational frequency bands and maximum RF power

This radio product transmits in either the 2.4GHz (2.412–2.472 GHz in the UK) or 5GHz (5.15–5.35, 5.47–5.725 in the UK) bands. The maximum transmitter EIRP power output, including antenna gain, is ≤ 20dBm for both bands.

Notice to users in Thailandประกาศถึงผู้ใช้ในประเทศไทย

Notice to users in Thailand

ประกาศถึงผู้ใช้ในประเทศไทย

This radiocommunication equipment has the electromagnetic field strength in compliance with the Safety Standard for the Use of Radiocommunication Equipment on Human Health announced by the National Telecommunications Commission.

เครื่องวิทยุคมนาคมนี้มีระดับการแผ่คลื่นแม่เหล็กไฟฟ้าสอดคล้องตามมาตรฐาน ความปลอดภัยต่อสุขภาพของมนุษย์จากการใช้เครื่องวิทยุคมนาคมที่คณะกรรมการกิจการโทรคมนาคมแห่งชาติประกาศกำหนด

กสทช.

เครื่องวิทยุคมนาคมนี้ ได้รับยกเว้น ไม่ต้องได้รับใบอนุญาตให้มี ใช้ซึ่งเครื่องวิทยุคมนาคม หรือตั้งสถานีวิทยุคมนาคมตามประกาศ กสทช. เรื่อง เครื่องวิทยุคมนาคม และสถานีวิทยุคมนาคมที่ได้รับยกเว้นไม่ต้องได้รับใบอนุญาต วิทยุคมนาคมตามพระราชบัญญัติวิทยุคมนาคม พ.ศ. 2498

กสทช. | โทรคมนาคม
กำกับดูแลเพื่อประชาชน
Call Center 1200 (โทรฟรี)

Federal Communications Commission (FCC) compliance information statement

This product has been tested and found to comply with the limits for a Class A digital device, pursuant to Part 15 of the FCC Rules. Operation is subject to the following two conditions: (1) this device may not cause harmful interference, and (2) this device must accept any interference received, including interference that may cause undesired operation.

The FCC Class A limits are designed to provide reasonable protection against harmful interference when the equipment is operated in a commercial environment. This equipment generates, uses, and can radiate radio frequency energy and, if not installed and used in accordance with the instruction manual, may cause harmful interference to radio communications. Operation of this equipment in a residential area is likely to cause harmful interference, in which case the user will be required to correct the interference at his own expense.

The manufacturer is not responsible for any radio or television interference caused by using other than recommended cables or by unauthorized changes or modifications to this equipment. Unauthorized changes or modifications could void the user's authority to operate this equipment.

Note: To assure compliance with FCC regulations on electromagnetic interference for a Class A computing device, use a properly shielded and grounded cable such as Lexmark part number 1021231 for parallel attach or 1021294 for USB attach. Use of a substitute cable not properly shielded and grounded may result in a violation of FCC regulations.

Any questions regarding this compliance information statement should be directed to:

Director of Lexmark Technology & Services
Lexmark International, Inc.
740 West New Circle Road
Lexington, KY 40550
Telephone: (859) 232–2000
E-mail: regulatory@lexmark.com

Innovation, Science and Economic Development Canada compliance statement

This Class A digital apparatus meets all requirements of the Canadian Interference-Causing Equipment Standard ICES-003.

Avis de conformité aux normes de l'Innovation, Sciences et Développement économique Canada

Cet appareil numérique de classe A est conforme aux exigences de la norme canadienne relative aux équipements pouvant causer des interférences NMB-003.

European Community (EC) directives conformity

This product is in conformity with the protection requirements of EC Council directives 2014/30/EU, 2014/35/EU, and 2011/65/EU as amended by (EU) 2015/863 on the approximation and harmonization of the laws of the Member States relating to electromagnetic compatibility, safety of electrical equipment designed for use within certain voltage limits, and on the restrictions of use of certain hazardous substances in electrical and electronic equipment.

The manufacturer of this product is: Lexmark International, Inc., 740 West New Circle Road, Lexington, KY, 40550 USA. The EEA/EU authorized representative is: Lexmark International Technology Hungária Kft., 8 Lechner Ödön fasor, Millennium Tower III, 1095 Budapest HUNGARY. The EEA/EU Importer is: Lexmark International Technology S.à.r.l. 20, Route de Pré-Bois, ICC Building, Bloc A, CH-1215 Genève, Switzerland. A declaration of conformity to the requirements of the Directives is available upon request from the Authorized Representative or may be obtained at **www.lexmark.com/en_us/about/regulatory-compliance/european-union-declaration-of-conformity.html**.

This product satisfies the Class A limits of EN 55032 and safety requirements of EN 62368-1.

United Kingdom (UK) conformity

United Kingdom (UK) conformity

This product is in conformity with the protection requirements of the Electromagnetic Compatibility Regulations 2016, the Electrical Equipment (Safety) Regulations 2016, and the Restriction of the Use of Certain Hazardous Substances in Electrical and Electronic Equipment Regulations 2012.

The manufacturer of this product is: Lexmark International, Inc., 740 West New Circle Road, Lexington, KY, 40550 USA. The UK Importer is: Lexmark International Ltd, Quantum House, 60 Norden Road, Maidenhead

SL6 4AY, United Kingdom. A declaration of conformity is available upon request from the UK Importer or may be obtained at **www.lexmark.com/en_us/about/regulatory-compliance/uk-declaration-of-conformity.html**.

This product satisfies the Class A limits of BS EN 55032 and safety requirements of BS EN 62368-1.

Radio interference notice

Warning

This is a product that complies with the emission requirements of EN 55032 Class A limits and immunity requirements of EN 55035. This product is not intended to be used in residential/domestic environments.

This is a Class A product. In a domestic environment, this product may cause radio interference, in which case the user may be required to take adequate measures.

STATEMENT OF LIMITED WARRANTY FOR LEXMARK LASER PRINTERS, LEXMARK LED PRINTERS, AND LEXMARK MULTIFUNCTION LASER PRINTERS

STATEMENT OF LIMITED WARRANTY FOR LEXMARK LASER PRINTERS, LEXMARK LED PRINTERS, AND LEXMARK MULTIFUNCTION LASER PRINTERS

Lexmark International, Inc., Lexington, KY

This limited warranty applies to the United States and Canada. For customers outside the U.S., refer to the country-specific warranty information that came with your product.

This limited warranty applies to this product only if it was originally purchased for your use, and not for resale, from Lexmark or a Lexmark Remarketer, referred to in this statement as “Remarketer.”

Limited warranty

Lexmark warrants that this product:

—Is manufactured from new parts, or new and serviceable used parts, which perform like new parts

—Is, during normal use, free from defects in material and workmanship

If this product does not function as warranted during the warranty period, contact a Remarketer or Lexmark for repair or replacement (at Lexmark's option).

If this product is a feature or option, this statement applies only when that feature or option is used with the product for which it was intended. To obtain warranty service, you may be required to present the feature or option with the product.

If you transfer this product to another user, warranty service under the terms of this statement is available to that user for the remainder of the warranty period. You should transfer proof of original purchase and this statement to that user.

Limited warranty service

The warranty period starts on the date of original purchase as shown on the purchase receipt and ends 12 months later provided that the warranty period for any supplies and for any maintenance items included with the printer shall end earlier if it, or its original contents, are substantially used up, depleted, or consumed. Fuser Units, Transfer/Transport Units, Paper Feed items, if any, and any other items for which a Maintenance Kit is available are substantially consumed when the printer displays a “Life Warning” or “Scheduled Maintenance” message for such item.

To obtain warranty service you may be required to present proof of original purchase. You may be required to deliver your product to the Remarketer or Lexmark, or ship it prepaid and suitably packaged to a Lexmark designated location. You are responsible for loss of, or damage to, a product in transit to the Remarketer or the Lexmark designated location.

When warranty service involves the exchange of a product or part, the item replaced becomes the property of the Remarketer or Lexmark. The replacement may be a new or repaired item.

The replacement item assumes the remaining warranty period of the original product.

Replacement is not available to you if the product you present for exchange is defaced, altered, in need of a repair not included in warranty service, damaged beyond repair, or if the product is not free of all legal obligations, restrictions, liens, and encumbrances.

As part of your warranty service and/or replacement, Lexmark may update the firmware in your printer to the latest version. Firmware updates may modify printer settings and cause counterfeit and/or unauthorized products, supplies, parts, materials (such as toners and inks), software, or interfaces to stop working. Authorized use of genuine Lexmark products will not be impacted.

Before you present this product for warranty service, remove all print cartridges, programs, data, and removable storage media (unless directed otherwise by Lexmark).

For further explanation of your warranty alternatives and the nearest Lexmark authorized servicer in your area contact Lexmark on the World Wide Web.

Remote technical support is provided for this product throughout its warranty period. For products no longer covered by a Lexmark warranty, technical support may not be available or only be available for a fee.

Extent of limited warranty

Lexmark does not warrant uninterrupted or error-free operation of any product or the durability or longevity of prints produced by any product.

Warranty service does not include repair of failures caused by:

—Modification or unauthorized attachments

—Accidents, misuse, abuse or use inconsistent with Lexmark user’s guides, manuals, instructions or guidance

—Unsuitable physical or operating environment

—Maintenance by anyone other than Lexmark or a Lexmark authorized servicer

—Operation of a product beyond the limit of its duty cycle

—Use of printing media outside of Lexmark specifications

—Refurbishment, repair, refilling or remanufacture by a third party of products, supplies or parts

—Products, supplies, parts, materials (such as toners and inks), software, or interfaces not furnished by Lexmark

TO THE EXTENT PERMITTED BY APPLICABLE LAW, NEITHER LEXMARK NOR ITS THIRD PARTY SUPPLIERS OR REMARKETERS MAKE ANY OTHER WARRANTY OR CONDITION OF ANY KIND, WHETHER EXPRESS OR IMPLIED, WITH RESPECT TO THIS PRODUCT, AND SPECIFICALLY DISCLAIM THE IMPLIED WARRANTIES OR CONDITIONS OF MERCHANTABILITY, FITNESS FOR A PARTICULAR PURPOSE, AND SATISFACTORY QUALITY. ANY WARRANTIES THAT MAY NOT BE DISCLAIMED UNDER APPLICABLE LAW ARE LIMITED IN DURATION TO THE WARRANTY PERIOD. NO WARRANTIES, EXPRESS OR IMPLIED, WILL APPLY AFTER THIS PERIOD. ALL INFORMATION, SPECIFICATIONS, PRICES, AND SERVICES ARE SUBJECT TO CHANGE AT ANY TIME WITHOUT NOTICE.

Limitation of liability

Your sole remedy under this limited warranty is set forth in this document. For any claim concerning performance or nonperformance of Lexmark or a Remarketer for this product under this limited warranty, you may recover actual damages up to the limit set forth in the following paragraph.

Lexmark's liability for actual damages from any cause whatsoever will be limited to the amount you paid for the product that caused the damages. This limitation of liability will not apply to claims by you for bodily injury or damage to real property or tangible personal property for which Lexmark is legally liable. **IN NO EVENT WILL LEXMARK BE LIABLE FOR ANY LOST PROFITS, LOST SAVINGS, INCIDENTAL DAMAGE, OR OTHER ECONOMIC OR CONSEQUENTIAL DAMAGES.** This is true even if you advise Lexmark or a Remarketer of the possibility of such damages. Lexmark is not liable for any claim by you based on a third party claim.

This limitation of remedies also applies to claims against any Suppliers and Remarketers of Lexmark. Lexmark's and its Suppliers' and Remarketers' limitations of remedies are not cumulative. Such Suppliers and Remarketers are intended beneficiaries of this limitation.

Additional rights

Some states do not allow limitations on how long an implied warranty lasts, or do not allow the exclusion or limitation of incidental or consequential damages, so the limitations or exclusions contained above may not apply to you.

This limited warranty gives you specific legal rights. You may also have other rights that vary from state to state.

Index

A

activating Voice Guidance 27
adding a shortcut
  copy 85
adding apps to home screen 22
adding contact groups 26
adding contacts 26
adding hardware options
  print driver 51
adding internal options
  print driver 51
adding printers to a computer 49
adding shortcut
  e-mail 86
  fax destination 88
  FTP address 92
Address Book
  using 26
ADF pick roller
  cleaning 213
  replacing 205
ADF registration
  adjusting 285
ADF rollers
  cleaning 213
  replacing 205
ADF separator roller
  cleaning 213
  replacing 205
adjusting
  scanner registration 285
adjusting ADF registration 285
adjusting brightness
  of display 217
adjusting default volume
  headphone 29
  speaker 29
adjusting fax darkness 88
adjusting speech rate
  Voice Guidance 29
adjusting toner darkness 82
AirPrint
  using 78
analog fax
  setting up 30
answering machine
  setting up 32
assigning printer to a ring
pattern 36
attaching cables 20
avoiding paper jams 254

B

black pages 238
blank pages 226
blocking junk faxes 89
bookmarks
  creating 25
  creating folders for 26

C

caller ID is not shown 273
canceling a print job 82
cannot connect printer to
Wi-Fi 266
cannot detect internal
option 267
cannot open Embedded Web
Server 265
cannot receive faxes using
analog fax 276
cannot scan to a computer 279
cannot scan to a network
folder 280
cannot send e-mails 273
cannot send or receive faxes
using analog fax 274
cannot send or receive faxes
using etherFAX 277
cannot send the fax cover page
from the computer 278
Card Copy 85
  setting up 23
changing fax resolution 88
changing the wallpaper 24
checking the status of parts and
supplies 180
cleaning
  exterior of the printer 209
  interior of the printer 209
cleaning the ADF pick roller 213
cleaning the ADF rollers 213
cleaning the ADF separator
roller 213
cleaning the printer 209
Cleaning the Scanner 177
cleaning the scanner 210
cleaning the touch screen 209
clearing jam
  in automatic document
    feeder 263
  in door A 257
  in door B 260
  in the duplex unit 261
  in the multipurpose feeder 263
  in trays 262
collated printing does not
work 270
collating copies 84
computer
  connecting to the printer 73
computer, scanning to 91
confidential documents do not
print 249
confidential print jobs
  configuring 80
  printing 81
configuring daylight saving
time 37
configuring fax speaker
settings 37
configuring supply
notifications 180
configuring the e-mail server
settings 37
configuring Wi-Fi Direct 72
connecting a computer to the
printer 73
connecting mobile device
  to printer 73
connecting the printer
  to a wireless network 71
connecting to a wireless network
  using PIN method 72
  using Push Button method 72
conserving supplies 217
contacting customer
support 286
control panel
  using 12
convenience stapler
  installing 65
  red indicator light 268

copy quality problem
partial copies of documents 281
partial copies of photos 281
poor copy quality 282
vertical dark streaks 282
copying
on both sides of the paper 84
on letterhead 84
photos 83
separator sheets between copies 84
using the automatic document feeder (ADF) 83
using the scanner glass 83
copying cards 85
copying different paper sizes 83
copying from
selected tray 83
copying multiple pages
onto a single sheet 85
copying problem
scanner does not close 284
scanner does not respond 285
creating a shortcut
copy 85
network folder 93
creating bookmarks 25
creating folders
for bookmarks 26
creating shortcut
e-mail 86
fax destination 88
FTP address 92
creating shortcuts 23
crooked print 238
Customer Support
using 24
customer support
contacting 286
customizing the display 24

D

dark print 227
date and time
fax settings 37
daylight saving time
configuring 37
deactivating the Wi-Fi network 74
deactivating Voice Guidance 27
default headphone volume
adjusting 29
default speaker volume
adjusting 29
defective intelligent storage drive 267
deleting contact groups 26
deleting contacts 26
Device Quotas
setting up 25
different paper sizes, copying 83
directory list
printing 82
disabling SMTP server not set up error 272
display brightness
adjusting 217
Display Customization
using 24
displaying apps on home screen 22
distinctive ring
fax setup 36
documents, printing
from a computer 77
from a mobile device 77
dots on print 235

E

editing contacts 26
emission notices 289, 299, 0
enabling distinctive ring 36
enabling Magnification mode 28
enabling personal identification numbers 29
enabling spoken passwords 29
enabling the USB port 254
enabling Wi-Fi Direct 73
enlarging a copy size 84
envelope seals when printing 270
environmental settings 217
erasing
printer memory 75
erasing printer memory 76
erasing printer storage drive 75
error codes 220
error messages 220
etherFAX
setting up fax function 31
Ethernet port 20
exporting a configuration file
using the Embedded Web Server 50
EXT port 20
e-mail
sending 86
e-mail alerts
setting up 180
e-mail function
setting up 37
e-mail server
configuring 37
e-mail service providers 37
e-mail shortcut
creating 86
e-mail troubleshooting
cannot send e-mails 273
e-mailing
using the automatic document feeder (ADF) 86
using the scanner glass 86

F

factory default settings
restoring 76
fax
sending 87
fax darkness
adjusting 88
fax destination shortcut
creating 88
fax driver
installing 49
fax log
printing 89
fax resolution
changing 88
fax server, using
setting up the fax function 32
fax setup
standard telephone line connection 32
using different plugs 34
using different wall jacks 34
fax speaker settings
configuring 37
fax troubleshooting
caller ID is not shown 273
can send but not receive faxes using analog fax 276
cannot send faxes using analog fax 276
cannot send or receive faxes using analog fax 274

cannot send or receive faxes using etherFAX 277
cannot send the fax cover page from the computer 278
cannot set up etherFAX 276
missing information on the fax cover page 278
poor print quality 278
fax, scheduling 88
faxing
setting the date and time 37
using the automatic document feeder (ADF) 87
using the scanner glass 87
FCC notices 299
finding printer information 9
fine lines not printed correctly 229
firmware card 53
firmware, updating 0
flash drive
printing from 79
scanning to 94
folder paper 230
font sample list
printing 82
forwarding fax 89
FTP address
creating shortcut 92
FTP server, scanning to
using the control panel 92

G

genuine Lexmark parts and supplies 181
genuine parts and supplies 181
gray background on prints 231

H

hard disk 53
erasing 75
hard disk storage drive 76
hardware options
trays 53
hardware options, adding
print driver 51
held documents do not print 249
held jobs
printing 81
setting expiration time 80
Hibernate mode
configuring 217
holding faxes 89
home screen
customizing 22
using 21
home screen icons
displaying 22
horizontal light bands 241
humidity around the printer 293

I

icons on the home screen
showing 22
images cut off on print 239
imaging unit
ordering 182
replacing 185
importing a configuration file
using the Embedded Web Server 50
incorrect margins 232
indicator light
understanding the status 12
installing convenience stapler 65
installing internal options
intelligent storage drive 54
internal solutions port 61
installing options
printer hard disk 58
installing printer hard disk 58
installing the fax driver 49
installing the print driver 49
installing the printer software 49
installing trays 53
intelligent storage drive 53, 76
erasing 75
installing 54
internal options 53
printer hard disk 58
internal options, adding
print driver 51
internal solutions port
installing 61

J

jagged image
scanning from ADF 283
jagged text
scanning from ADF 283
jam locations
identifying 255
jammed pages are not reprinted 272
jams, paper
avoiding 254
job prints from the wrong tray 250
job prints on the wrong paper 250
junk faxes
blocking 89

L

letterhead
copying on 84
selecting 15
Lexmark Mobile Print
using 77
Lexmark Print
using 77
Lexmark ScanBack Utility 91
light print 233
LINE port 20
linking trays 48
loading envelopes
in the multipurpose feeder 47
loading letterhead 45
in the multipurpose feeder 47
loading paper 45
loading trays 45
locating paper jams 255
locating the security slot 75

M

Magnification mode
enabling 28
making copies 83
managing screen saver 24
MarkNet N8450 Wireless Print Server 196
menu
802.1x 164
About this Printer 110
Accessibility 103
AirPrint 158
Anonymous Data Collection 103
Cloud Services Enrollment 175
Confidential Print Setup 173
Configuration Menu 104

Copy Defaults 120
Custom Scan Sizes 119
Device 176
Disk Encryption 174
Eco-Mode 98
Erase Temporary Data Files 174
Ethernet 159
E-mail Defaults 140
E-mail Setup 139
Fax 177
Fax Cover Page 124
Fax Log Settings 124
Fax Mode 124
Fax Receive Settings 124
Fax Send Settings 124
Fax Server E-mail Settings 136
Fax Server Scan Settings 136
Fax Server Setup 136
Fax Setup 124
Flash Drive Print 153
Flash Drive Scan 150
Forms Merge 177
FTP Defaults 146
General Fax Settings 124, 136
H.323 Settings 124
Home Screen
  Customization 109
HTTP/FTP Settings 166
HTTPS Fax Settings 124
Image 117
IPSec 163
Job Accounting 113
Layout 110
Local Accounts 169
Login Restrictions 173
LPD Configuration 165
Manage Permissions 168
Media Types 120
Menu Settings Page 176
Miscellaneous 174
Mobile Services
  Management 159
Network 177
Network Overview 155
Notifications 99
Out of Service Erase 109
PCL 115
PDF 114
PostScript 115
Power Management 102
Preferences 96
Print 176
Quality 112
Remote Operator Panel 99
Restore Factory Defaults 104
Restrict external network
  access 167
Schedule USB Devices 170
Security Audit Log 170
Setup 112
Shortcuts 177
SIP Settings 124
SNMP 162
Solutions LDAP Settings 174
Speaker Settings 124
T.38 Settings 124
TCP/IP 161
ThinPrint 166
Tray Configuration 118
Troubleshooting 177
Universal Setup 118
Update Firmware 110
USB 167
VoIP Settings 124
Web Link Setup 145
Wireless 155
Wi-Fi Direct 158
Menu Settings Page
  printing 179
missing information on the fax
cover page 278
missing print 246
mobile device
  connecting to printer 73
  printing from 77, 78
Mopria Print Service 78
mottled print 235
moving the printer 19, 217
multipurpose feeder
  loading 47

N

navigating the screen
  using gestures 27
navigating the screen using
gestures 27
network folder
  creating a shortcut 93
network setup page
  printing 74
noise emission levels 289
nonvolatile memory
  erasing 75
Non-Lexmark supply 269
non-volatile memory 76
Not enough free space in flash
memory for resources 268
notices 289, 292, 294, 295,
299, 0

O

on-screen keyboard
  using 28
optional cards 53
ordering supplies
  imaging unit 182
  toner cartridge 181

P

paper
  letterhead 15
  preprinted forms 15
  selecting 12
  unacceptable 14
  Universal size setting 45
paper characteristics 13
paper curl 236
paper frequently jams 271
paper guidelines 12
paper jam in automatic document
feeder 263
paper jam in door A 257
paper jam in door B 260
paper jam in the duplex unit 261
paper jam in the multipurpose
feeder 263
paper jam in trays 262
paper jams
  avoiding 254
  locating 255
paper sizes, supported 15
paper types, supported 17
paper weights, supported 18
partial copies of documents 281
partial copies of photos 281
parts status
  checking 180
personal identification number
method 72
personal identification numbers
  enabling 29
photos, copying 83
pick tires
  replacing 200

placing separator sheets 82
between copies 84
poor copy quality 282
poor fax print quality 278
power cord socket 20
power save modes
configuring 217
power supply
replacing 189
preprinted forms
selecting 15
print driver
hardware options, adding 51
installing 49
print job
canceling 82
print jobs not print 248
print quality problem
blank pages 226
crooked print 238
dark print 227
dots on print 235
fine lines not printed correctly 229
folded paper 230
gray background on prints 231
horizontal light bands 241
incorrect margins 232
light print 233
mottled print 235
paper curl 236
repeating defects 247
skewed print 238
solid black pages 238
text or images cut off 239
toner easily rubs off 240
vertical dark bands 243
vertical dark lines or streaks 245
vertical dark streaks with print missing 246
vertical light bands 242
vertical white lines 243
white pages 226
wrinkled paper 230
print quality problems 219
Print Quality Test Pages 177
print troubleshooting
collated printing does not work 270
confidential and other held documents do not print 249
envelope seals when printing 270
job prints from the wrong tray 250
job prints on the wrong paper 250
paper frequently jams 271
print quality problems 219
tray linking does not work 271
unable to read flash drive 253
printer
minimum clearances 19
selecting a location for 19
shipping 218
printer apps 22
printer configurations 11
printer error codes 220
printer error messages 220
printer is not responding 252
printer memory
erasing 75
printer menus 95, 179
printer messages
Defective flash detected 267
Non-Lexmark supply 269
Not enough free space in flash memory for resources 268
Replace cartridge, printer region mismatch 268
printer options troubleshooting
cannot detect internal option 267
printer serial number
finding 10
printer settings
restoring factory default 76
printer software
installing 49
printer status 12
printing
confidential print jobs 81
directory list 82
fax log 89
font sample list 82
from a computer 77
from a flash drive 79
from a mobile device 78
held jobs 81
Menu Settings Page 179
network setup page 74
using Mopria Print Service 78
using Wi-Fi Direct 78
printing a directory list 82
printing a font sample list 82
printing a network setup page 74
printing from a computer 77
printing problem
print jobs do not print 248
slow printing 250
Push Button method 72

R

received faxes
holding 89
recycling
Lexmark packaging 287
recycling Lexmark products 287
red indicator light
on the convenience stapler 268
reducing a copy size 84
removing paper jam
in automatic document feeder 263
in door A 257
in door B 260
in the duplex unit 261
in the multipurpose feeder 263
in trays 262
repeat print jobs 80
repeating defects on print 247
Replace cartridge, printer region mismatch 268
replacing parts
ADF pick roller 205
ADF rollers 205
ADF separator roller 205
pick tires 200
scanner glass pad 202
replacing power supply 189
replacing staple refill 188
replacing supplies
imaging unit 185
toner cartridge 183
replacing wireless print server 196
reports
printer status 181
printer usage 181
resetting
supply usage counters 269
resetting supply usage counters 209

resetting the supply usage counters 269
RJ-11 adapter 34
running a slideshow 24

S

safety information 7, 8
saving paper 85
Scan Center
  setting up 23
scan job not successful 283
scan quality problem
  jagged image 283
  jagged text 283
  partial copies of documents 281
  partial copies of photos 281
  poor copy quality 282
  vertical dark streaks 282
scan troubleshooting
  cannot scan to a computer 279
  cannot scan to network folder 280
scanner
  cleaning 210
scanner does not close 284
scanner does not respond 285
scanner glass pad
  replacing 202
scanning
  to a computer 91
  to an FTP server 92
  to flash drive 94
  using the automatic document feeder (ADF) 91
  using the scanner glass 91
scanning from the ADF
  vertical dark streaks 282
scanning problem
  scan job not successful 283
  scanner does not close 284
  scanner does not respond 285
  scanning freezes the computer 284
  scanning takes too long 284
scanning to a network folder 93
scanning to an FTP server
  using the control panel 92
scheduling a fax 88
securing printer data 76
security slot
  locating 75
selecting location
  for the printer 19
sending e-mail 86
sending fax 87
separator sheets
  placing 82
serial number, printer
  finding 10
setting the paper size 45
setting the paper type 45
setting the Universal paper size 45
setting up analog fax 30
setting up Device Quotas 25
setting up e-mail alerts 180
setting up fax
  standard telephone line connection 32
  using different plugs 34
  using different wall jacks 34
setting up fax function
  using etherFAX 31
setting up the fax function using fax server 32
shipping the printer 218
shortcut
  Copy 23
  Email 23
  Fax 23
  FTP 23
shortcut, creating
  e-mail 86
  fax destination 88
  FTP address 92
shortcut, creating a
  copy 85
shortcuts
  creating 23
skewed print 238
Sleep mode
  configuring 217
slow printing 250
SMB
  scanning 93
SMTP server not set up error
  disabling 272
SMTP settings
  configuring 37
solid black pages 238
sorting multiple copies 84
spoken passwords
  enabling 29
staple refill
  replacing 188
statement of volatility 76
storage drive
  erasing 75
storing paper 14
storing print jobs 80
supplies
  conserving 217
supplies status
  checking 180
supply notifications
  configuring 180
supply usage counters
  resetting 209, 269
supported applications 22
supported fax 30
supported file types 80
supported flash drives 80
supported paper sizes 15
supported paper types 17
supported paper weights 18

T

temperature around the printer 293
text cut off on print 239
toner cartridge
  ordering 181
  replacing 183
toner darkness
  adjusting 82
toner easily rubs off 240
touch screen
  cleaning 209
trays
  installing 53
  linking 48
  unlinking 48
troubleshooting
  cannot connect printer to Wi-Fi 266
  cannot open Embedded Web Server 265
  print quality problems 219
  printer is not responding 252
  SMTP server not set up error 272
troubleshooting, e-mail
  cannot send e-mails 273
troubleshooting, fax
  caller ID is not shown 273

can send but not receive faxes using analog fax 276
cannot send faxes using analog fax 276
cannot send or receive faxes using analog fax 274
cannot send or receive faxes using etherFAX 277
cannot send the fax cover page from the computer 278
cannot set up etherFAX 276
missing information on the fax cover page 278
poor print quality 278
troubleshooting, print
collated printing does not work 270
confidential and other held documents do not print 249
envelope seals when printing 270
jammed pages are not reprinted 272
job prints from the wrong tray 250
job prints on the wrong paper 250
paper frequently jams 271
tray linking does not work 271
troubleshooting, printer options
cannot detect internal option 267
troubleshooting, scan
cannot scan to a computer 279
cannot scan to a network folder 280
two-sided copying 84

U

unable to read flash drive
troubleshooting, print 253
Universal paper size
setting 45
unlinking trays 48
updating firmware 0
USB port
enabling 254
USB printer port 20
using Customer Support 24
using Display Customization 24
using genuine Lexmark parts and supplies 181
using the ADF
copying 83
using the control panel 12
using the home screen 21
using the scanner glass
copying 83

V

verify print jobs 80
vertical dark bands on prints 243
vertical dark lines on prints 245
vertical dark streaks 246
when scanning from the ADF 282
vertical light bands 242
vertical streaks on prints 245
vertical white lines 243
viewing reports 181
Voice Guidance
activating 27
deactivating 27
speech rate 29
Voice Guidance speech rate
adjusting 29
volatile memory 76
erasing 75

W

white pages 226
wireless network
connecting the printer to 71
Wi-Fi Protected Setup 72
wireless networking 71
wireless print server
replacing 196
wireless support 71
Wi-Fi Direct
configuring 72
enabling 73
printing from a mobile device 78
Wi-Fi network
deactivating 74
Wi-Fi Protected Setup
wireless network 72
wrinkled paper 230