User Manual

Clippers 1-3KVA
PF1.0 Online UPS

Uninterruptible Power Supply System

Version: 1.4

Table of Contents

1. Important Safety Warning 1
1-1. Transportation 1
1-2. Preparation 1
1-3. Installation 1
1-4. Operation 1
1-5. Maintenance, service and faults 2
2. Installation and setup 4
2-1. Rear panel view 4
2-2. Operating principle 11
2-3. Install the UPS (Only for RT Models) 11
2-4. Setup the UPS 12
2-5. Battery Replacement (Only for RT Models) 15
2-6. Battery Kit Assembly (option for RT Models) 16
3. Operations 18
3-1. Button operation 18
3-2. LCD Panel 18
3-3. Audible Alarm 20
3-4. LCD display wordings index 20
3-5. UPS Setting 21
3-6. Operating Mode Description 26
3-7. Faults Reference Code 27
3-8. Warning indicator 27
4. Troubleshooting 28
5. Storage and Maintenance 29
6. Specifications 30

1. Important Safety Warning

Please comply with all warnings and operating instructions in this manual strictly. Save this manual properly and read carefully the following instructions before installing the unit. Do not operate this unit before reading through all safety information and operating instructions carefully.

1-1. Transportation

- Please transport the UPS system only in the original package to protect against shock and impact.

1-2. Preparation

- Condensation may occur if the UPS system is moved directly from cold to warm environment. The UPS system must be absolutely dry before being installed. Please allow at least two hours for the UPS system to acclimate the environment.
- Do not install the UPS system near water or in moist environments.
- Do not install the UPS system where it would be exposed to direct sunlight or near heater.
- Do not block ventilation holes in the UPS housing.

1-3. Installation

- Do not connect appliances or devices which would overload the UPS system to the UPS output sockets.
- While connecting devices like laser printers, it is important to size your UPS appropriately. The UPS has to be sized for the maximum power draw of the laser printer as defined by the manufacturer.
- Place cables in such a way that no one can step on or trip over them.
- Do not connect domestic appliances such as hair dryers to UPS output sockets.
- The UPS can be operated by any individuals with no previous experience.
- Connect the UPS system only to an earthed shockproof outlet which must be easily accessible and close to the UPS system.
- Please use only VDE-tested, CE-marked (or UL-marked for 100/110/115/120/127 VAC models) mains cable (e.g. the mains cable of your computer) to connect the UPS system to the building wiring outlet (shockproof outlet).
- Please use only VDE-tested, CE-marked (or UL-marked for 100/110/115/120/127 VAC models) power cables to connect the loads to the UPS system.
- When installing the equipment, it should ensure that the sum of the leakage current of the UPS and the connected devices does not exceed 3.5mA.
- Temperature Rating - Units are considered acceptable for use in a maximum ambient of 40°C (104°F).
- For Pluggable Equipment - The socket-outlet shall be installed near the equipment and shall be easily accessible.

1-4. Operation

- Do not disconnect the mains cable on the UPS system or the building wiring outlet (shockproof socket outlet) during operations since this would cancel the protective earthing of the UPS system and of all connected loads.
- The UPS system features its own, internal current source (batteries). The UPS output sockets or output terminals block may be electrically live even if the UPS system is not connected to the building wiring outlet.
- In order to fully disconnect the UPS system, first press the OFF/Enter button to disconnect the mains.
- Prevent no fluids or other foreign objects from inside of the UPS system.

1-5. Maintenance, service and faults

- The UPS system operates with hazardous voltages. Repairs may be carried out only by qualified maintenance personnel.
- **Caution -** risk of electric shock. Even after the unit is disconnected from the mains (building wiring outlet), components inside the UPS system are still connected to the battery and electrically live and dangerous.
- Before carrying out any kind of service and/or maintenance, disconnect the batteries and verify that no current is present and no hazardous voltage exists in the terminals of high capability capacitor such as BUS-capacitors.
- Only persons are adequately familiar with batteries and with the required precautionary measures may replace batteries and supervise operations. Unauthorized persons must be kept well away from the batteries.
- **Caution -** risk of electric shock. The battery circuit is not isolated from the input voltage. Hazardous voltages may occur between the battery terminals and the ground. Before touching, please verify that no voltage is present!
- **Caution -** Do not dispose of batteries in a fire. The batteries may explode.
- **Caution -** Do not open or mutilate batteries. Released electrolyte is harmful to the skin and eyes. It may be toxic.
- Batteries may cause electric shock and have a high short-circuit current. Please take the precautionary measures specified below and any other measures necessary when working with batteries:
  a) Remove watches, rings, or other metal objects.
  b) Use tools with insulated handles.
  c) Wear rubber gloves and boots.
  d) Do not lay tools or metal parts on top of batteries.
  e) Disconnect charging source and load prior to installing or maintaining the battery.
  f) Remove battery grounds during installation and maintenance to reduce likelihood of shock. Remove the connection from ground if any part of the battery is determined to be grounded.
- When changing batteries, install the same number and same type of batteries or battery packs.

Manufacture	Type	Rated
Toplite (Guangzhou) Technology Battery Co Ltd (MH29104)	NPW45-12	12 V dc, 9.0 Ah
	UXW460-12	12 V dc, 9.0 Ah
	NPW36-12	12 V dc, 7.2 Ah
	UXW360-12	12 V dc, 7.2 Ah
	NPW45-12 FR	12 V dc, 7.0 Ah
	UXW460-12/FR	12 V dc, 7.0 Ah
	NPW36-12 FR	12 V dc, 7.0 Ah
CSB Battery Co Ltd (MH14533)	UXW360-12/FR	12 V dc, 7.0 Ah
	GP1272	12 V dc, 7.2 Ah
	UPS 12460 F2	12 V dc, 9.0 Ah
	UPS 12360 6	12 V dc, 6.5 Ah
	UPS 12360 7	12 V dc, 6.5 Ah
	HR 1234W	12 V dc, 8.5 Ah
	HR 1234W FR	12 V dc, 8.5 Ah

Yuasa Battery (Guangdong) Co Ltd (MH29616)	NPW45-12	12 V dc, 8.0 Ah
	NPW45-12FR	12 V dc, 8.0 Ah

- For UPS with internally mounted battery
  a) Instructions shall carry sufficient information to enable the replacement of the battery with a suitable manufacturer and catalogue number.
  b) Safety instructions to allow access by Service Personnel shall be stated in the installation/service handbook.
  c) If batteries are to be installed by Service Personnel, instructions for interconnections, including terminal torque, shall be provided.
- Do not attempt to dispose of batteries by burning them. This could cause battery explosion.
- Do not open or destroy batteries. Escaping electrolyte can cause injury to the skin and eyes. It may be toxic.
- Please replace the fuse only with the same type and amperage in order to avoid fire hazards.
- Do not dismantle the UPS system.
- **WARNING:** This is a category C2 UPS product. In a residential environment, this product may cause radio interference, in which case the user many be required to take additional measures. (only for 220/230/240 VAC system)

Only for 110/120 VAC system:

- **NOTE:** This equipment has been tested and found to comply with the limits for a Class A digital device, pursuant to part 15 of the FCC Rules. These limits are designed to provide reasonable protection against harmful interference when the equipment is operated in a commercial environment. This equipment generates, uses, and can radiate radio frequency energy and, if not installed and used in accordance with the instruction manual, may cause harmful interference to radio communications. Operation of this equipment in a residential area is likely to cause harmful interference in which case the user will be required to correct the interference at his own expense.
- **WARNING:** Changes or modifications not expressly approved by the party responsible for compliance could void the user's authority to operate the equipment.

2. Installation and setup

NOTE: Before installation, please inspect the unit. Be sure that nothing inside the package is damaged. Please keep the original package in a safe place for future use.

2-1. Rear panel view

Tower Models

IEC Type

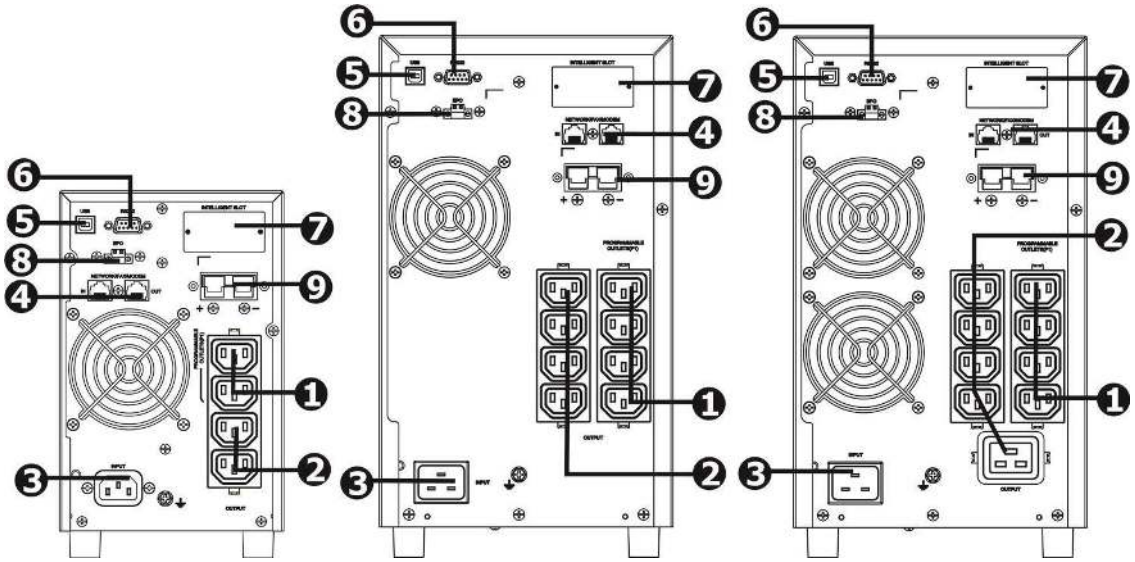

1K/1.5K **2K** **3K**

NEMA Type

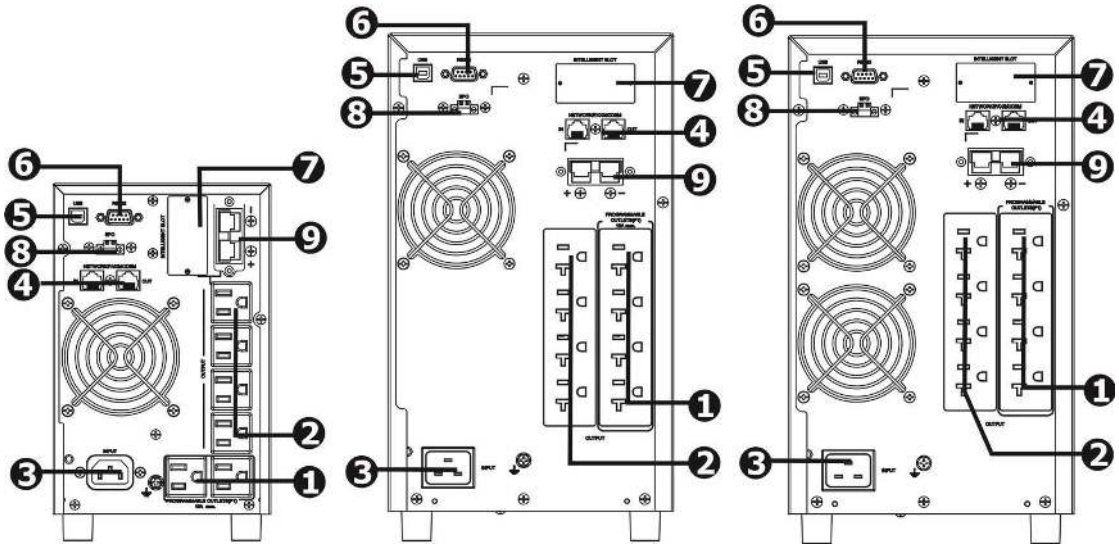

1K/1.5K **2K** **3K**

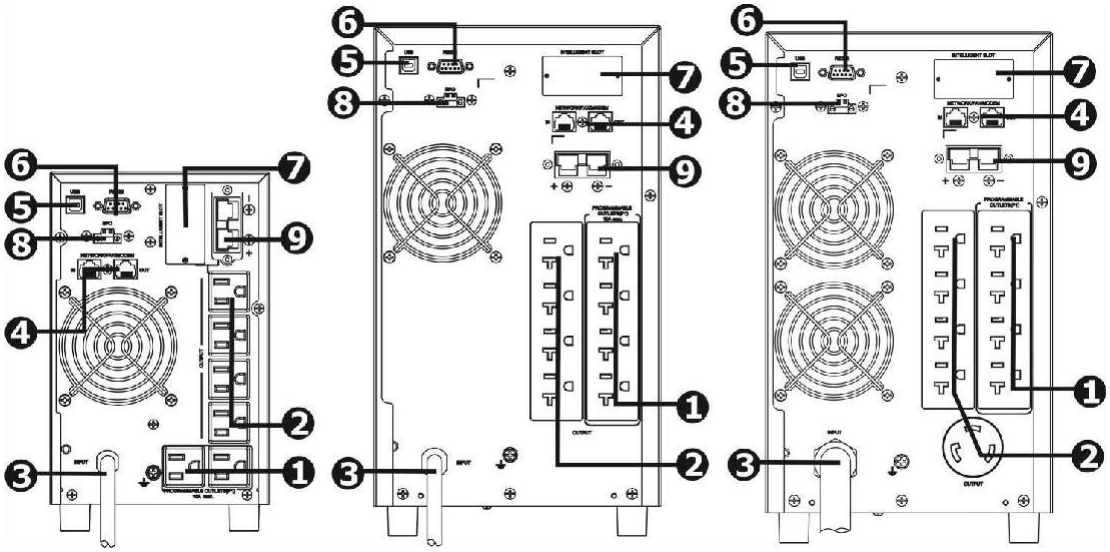

1K/1.5K **2K** **3K**

India Type

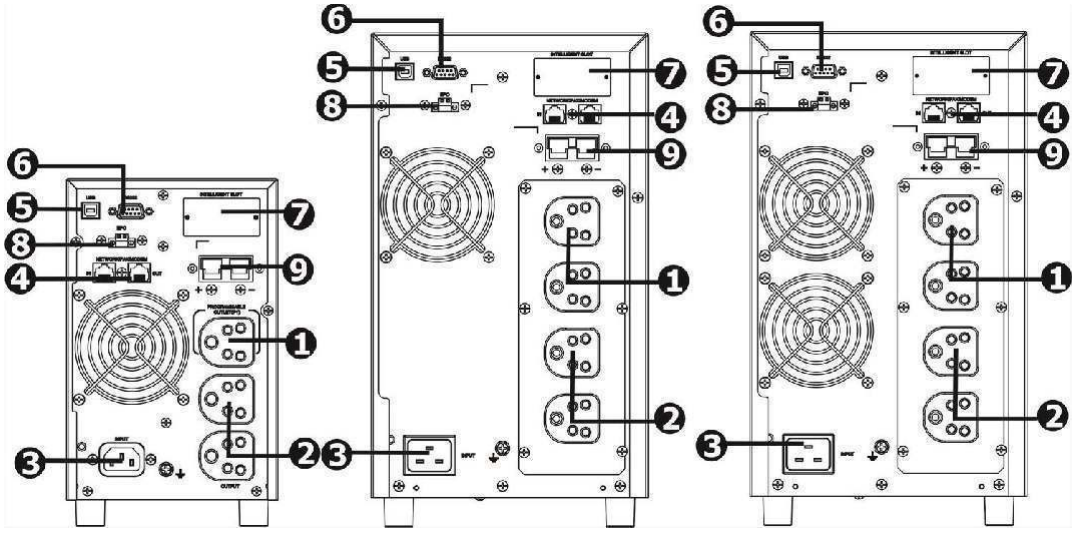

1K/1.5K **2K** **3K**

AU Type

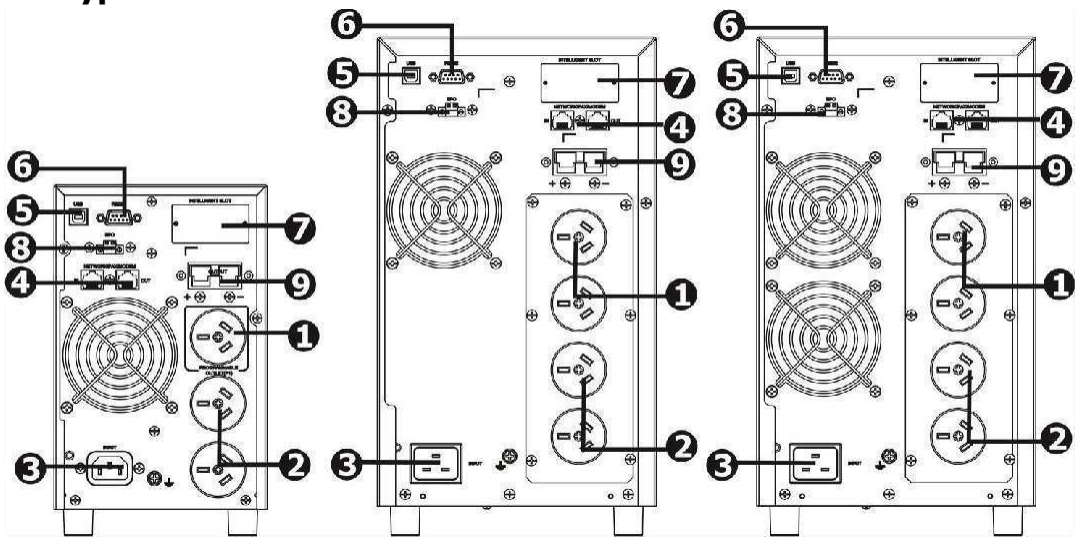

1K/1.5K **2K** **3K**

Brazil Type

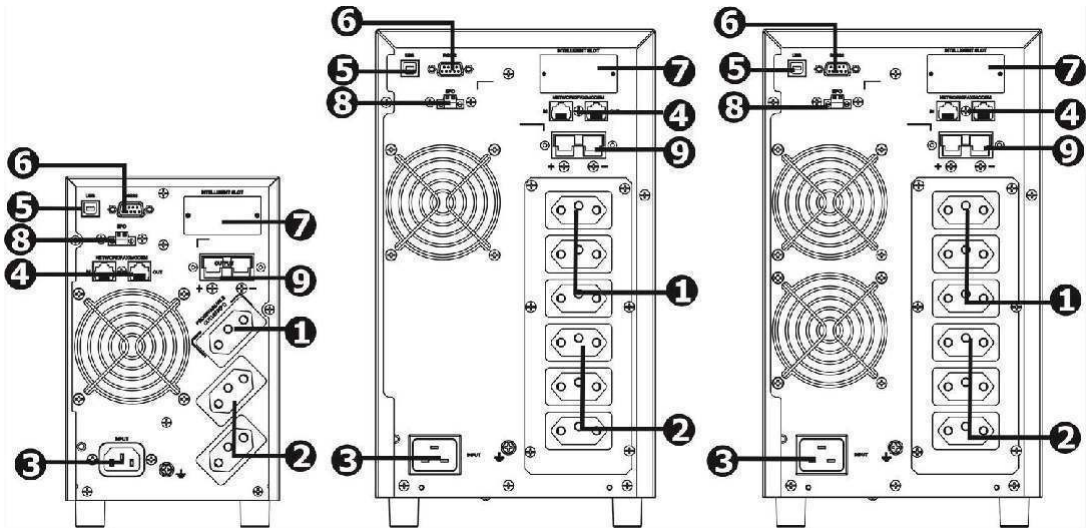

1K/1.5K **2K** **3K**

China Type

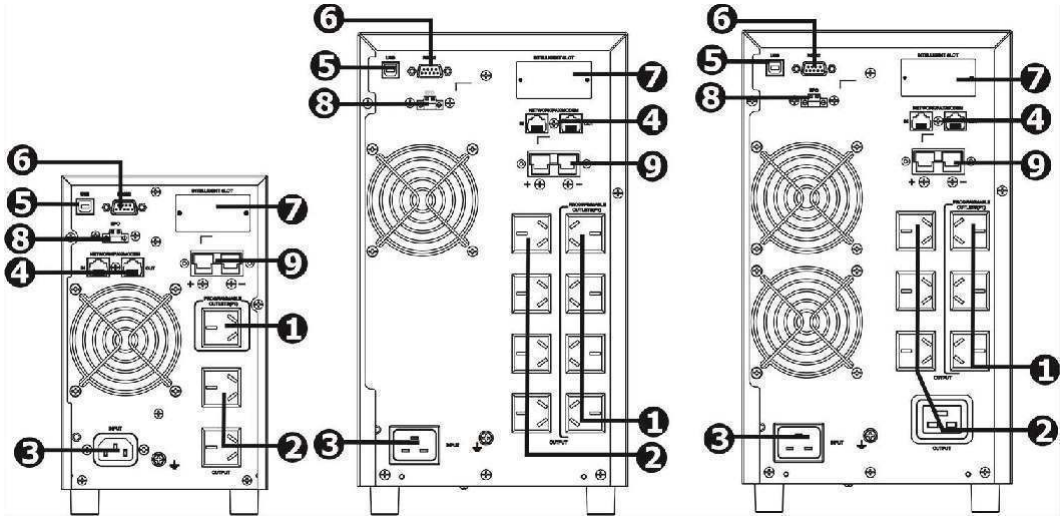

1K/1.5K **2K** **3K**

Schuko Type

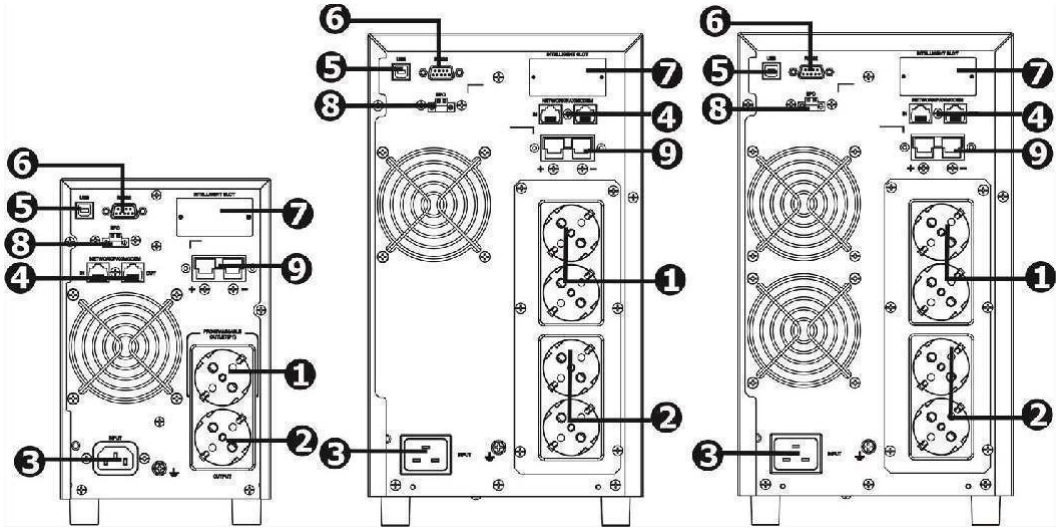

1K/1.5K **2K** **3K**

UK Type

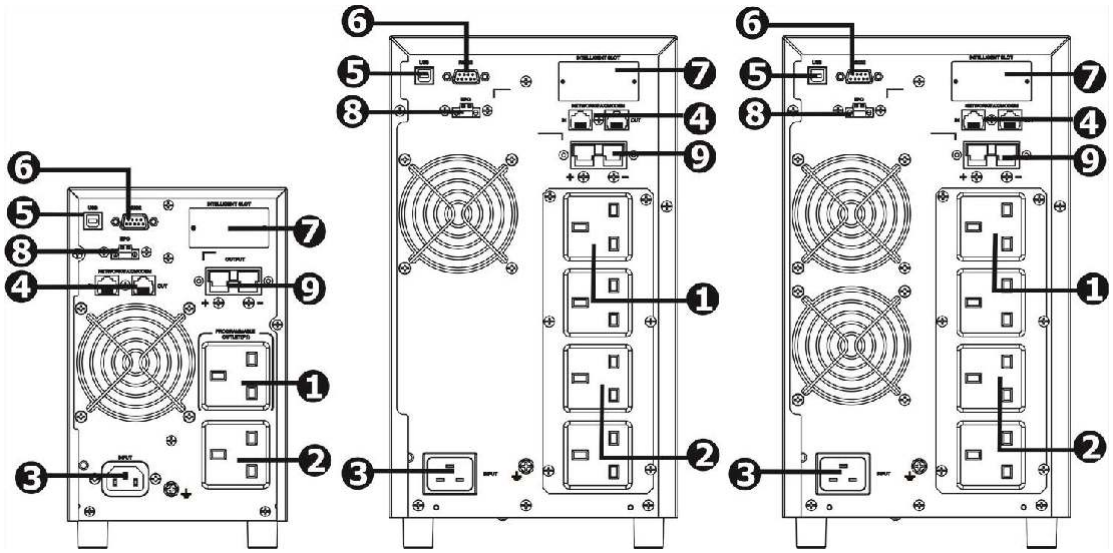

1K/1.5K **2K** **3K**

Universal Type

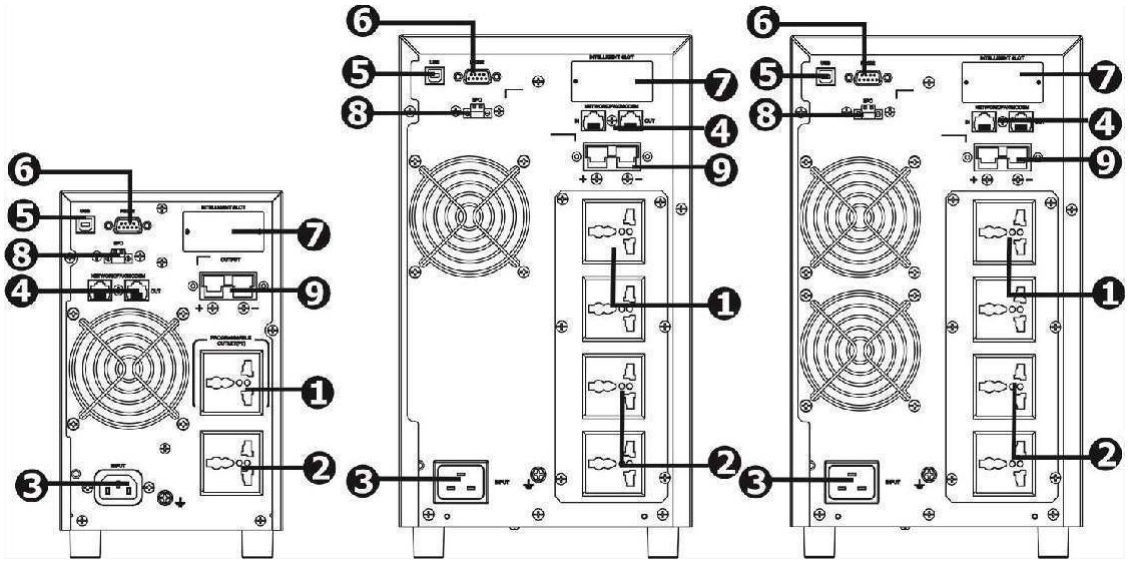

1K/1.5K **2K** **3K**

Thailand Type

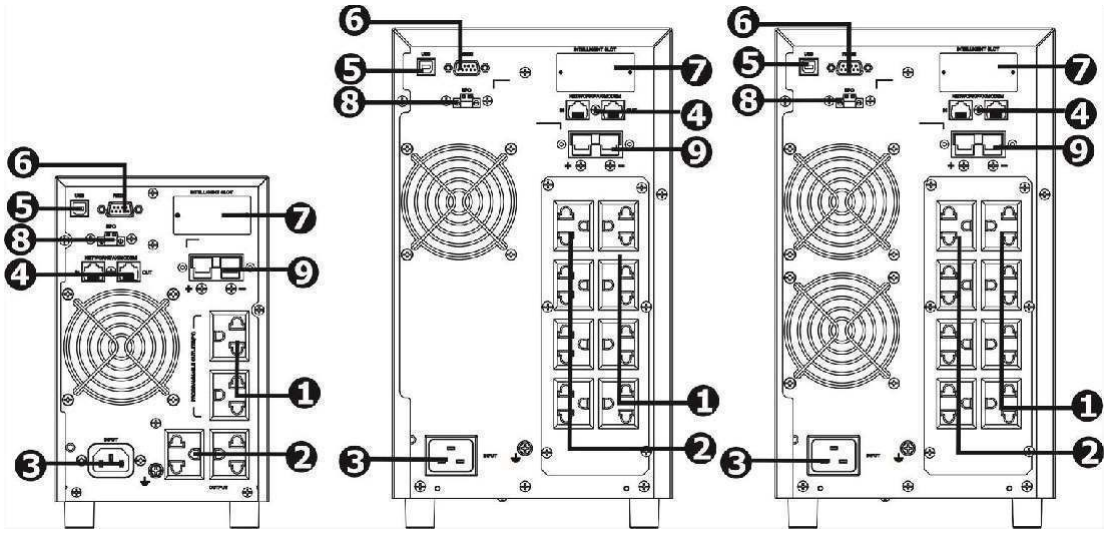

1K/1.5K **2K** **3K**

RT Models

IEC Type

1K/1.5K

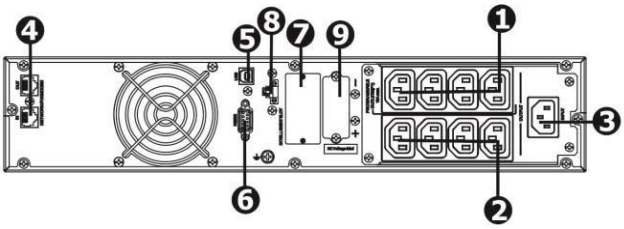

2K

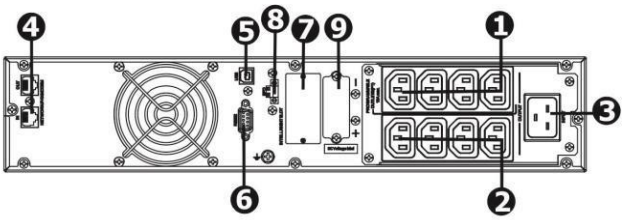

3K

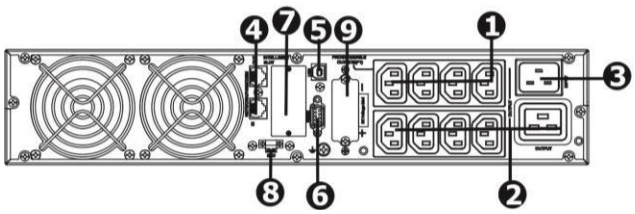

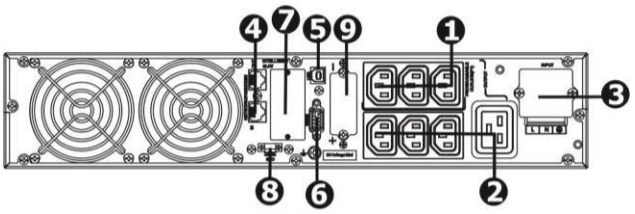

NEMA Type

1K/ 1.5K

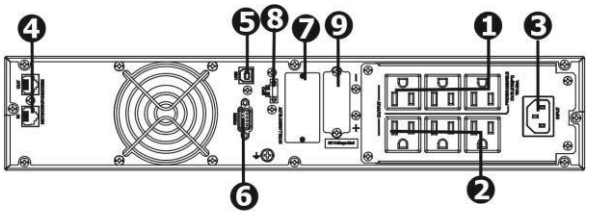

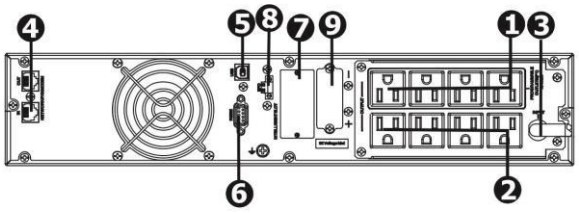

2K

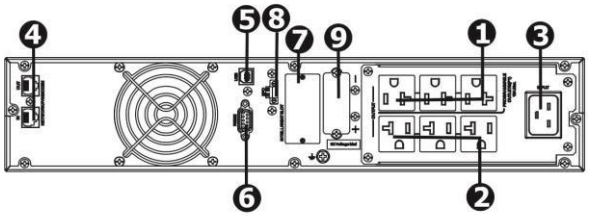

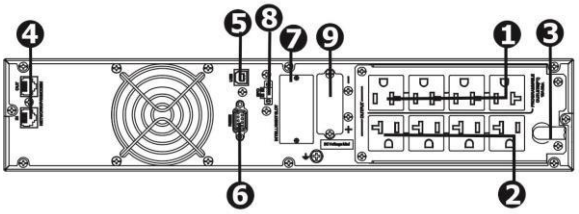

3K

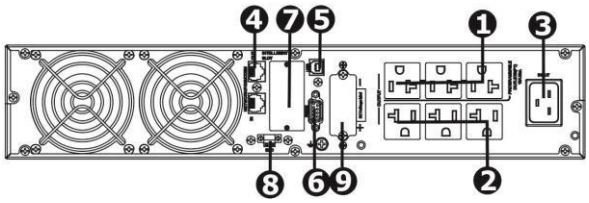

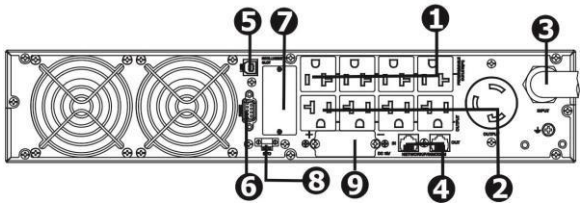

Schuko Type

1K/ 1.5K

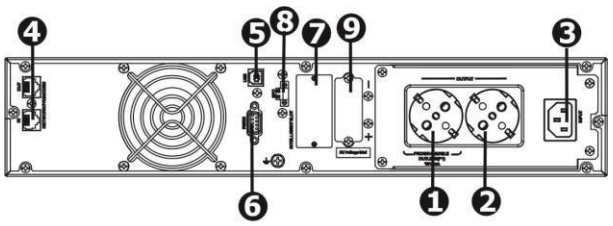

2K

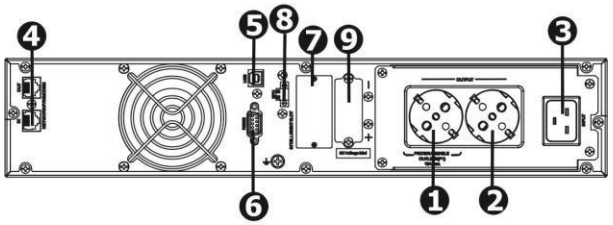

3K

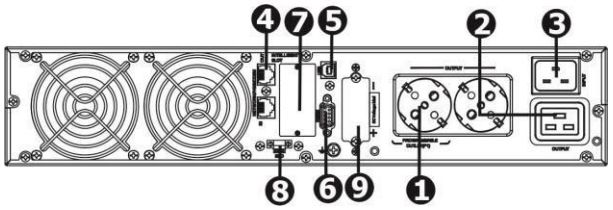

UK Type

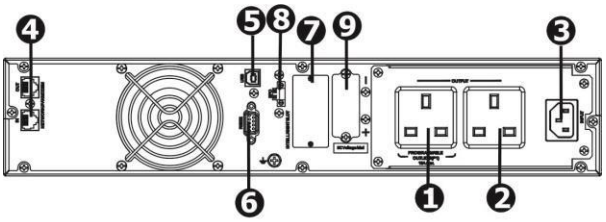

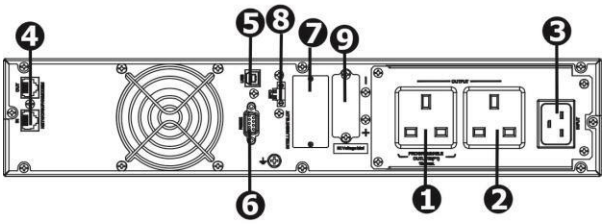

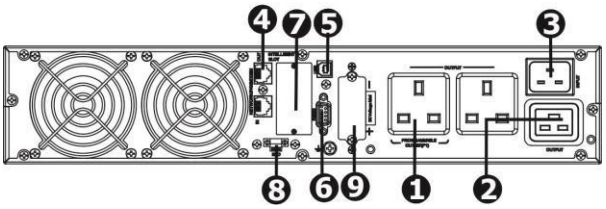

Universal Type

1K/ 1.5K

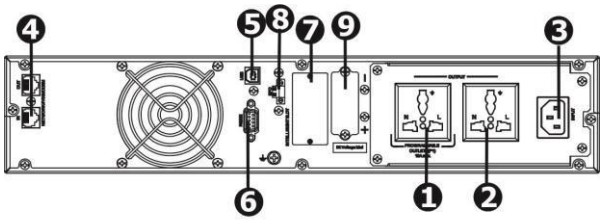

2K

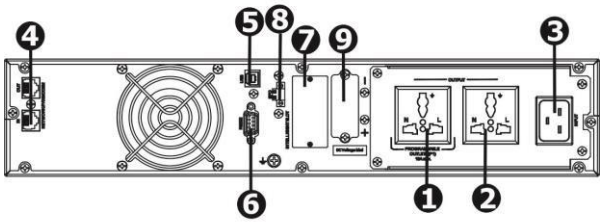

3K

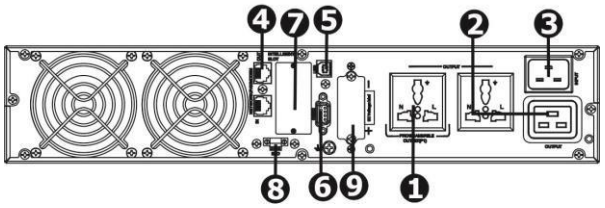

AU Type

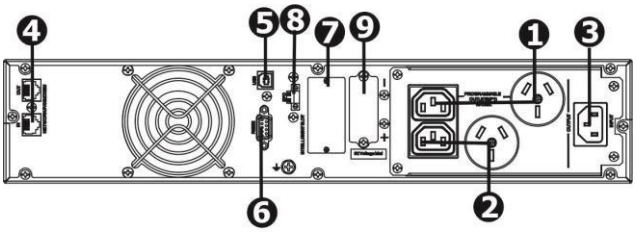

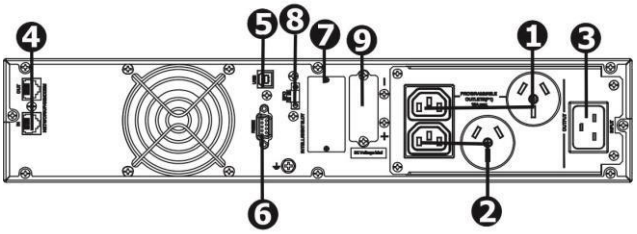

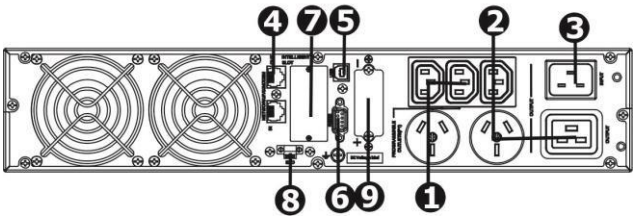

India Type

1K/ 1.5K

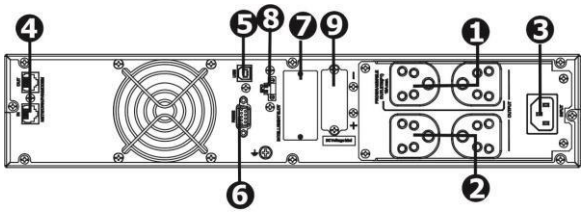

2K

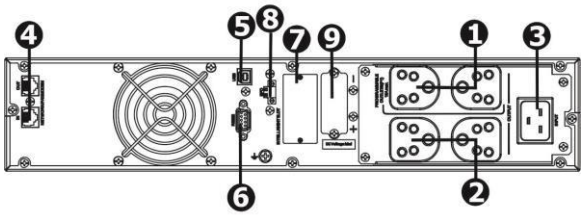

3K

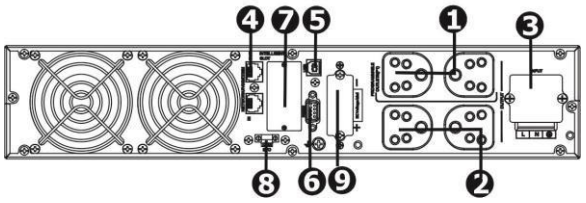

Thailand Type

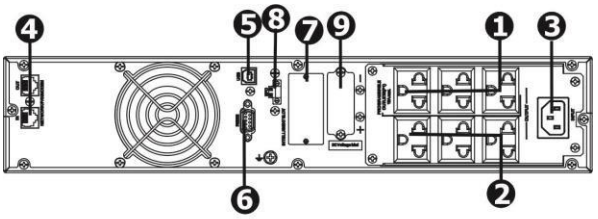

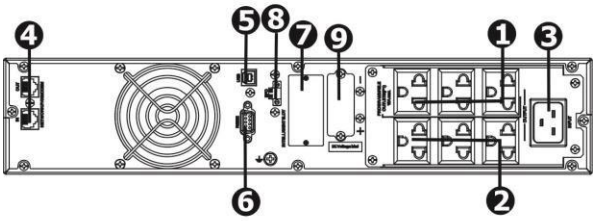

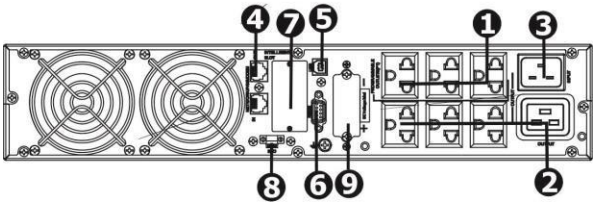

China Type

1K/ 1.5K

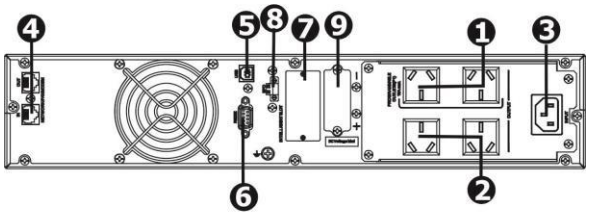

2K

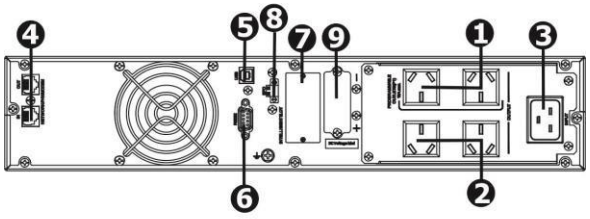

3K

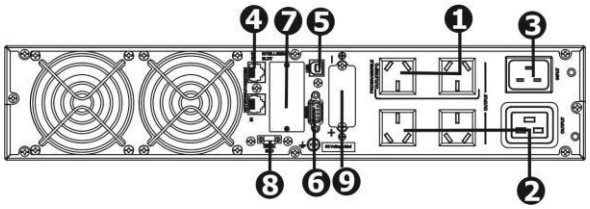

South Africa Type

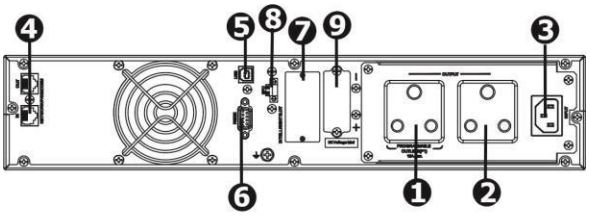

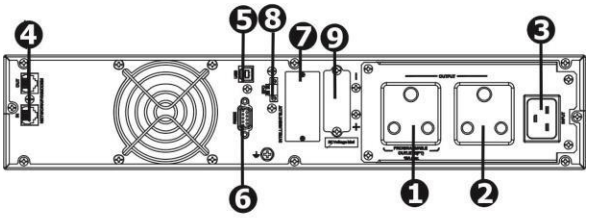

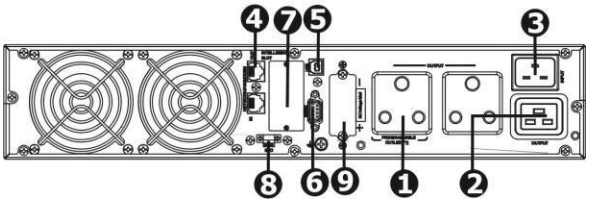

1. Programmable outlets: connect to non-critical loads.
2. Output receptacles: connect to mission-critical loads.
3. AC input
4. Network/Fax/Modem surge protection
5. USB communication port
6. RS-232 communication port
7. SNMP intelligent slot
8. Emergency power off function connector (EPO)
9. External battery connection

2-2. Operating principle

The operating principle of the UPS is shown as below

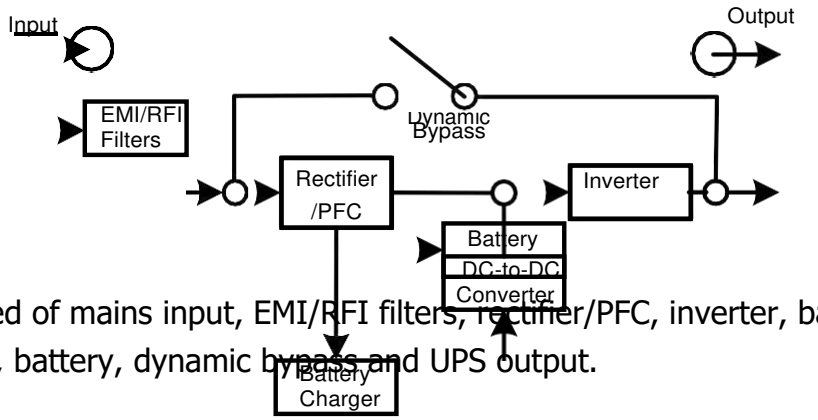

The UPS is composed of mains input, EMI/RFI filters, rectifier/PFC, inverter, battery charger, DC-to-DC converter, battery, dynamic bypass and UPS output.

2-3. Install the UPS (Only for RT Models)

For safety consideration, the UPS is shipped out from factory without connecting battery wires. Before install the UPS, please follow below steps to re-connect battery wires first.

Step 1

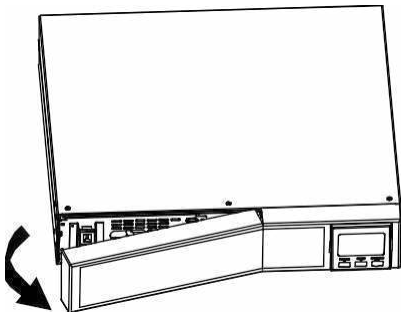

Remove front panel.

Step 2

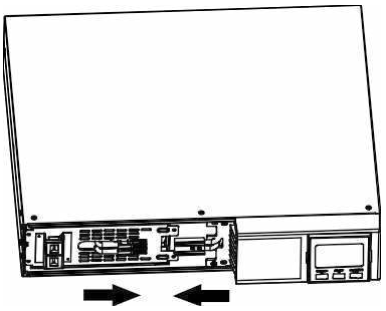

Connect the AC input and re-connect battery wires.

Step 3

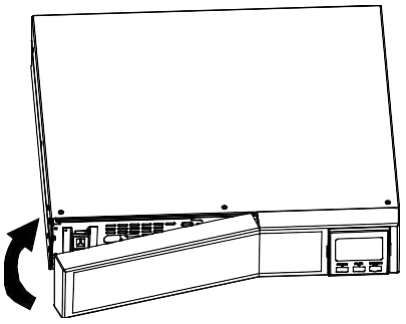

Put the front panel back to the unit.

This UPS can be either displayed on the desk or mounted in the 19” rack chassis. Please choose proper installation to position this UPS.

Rack-mount Installation

Step 1

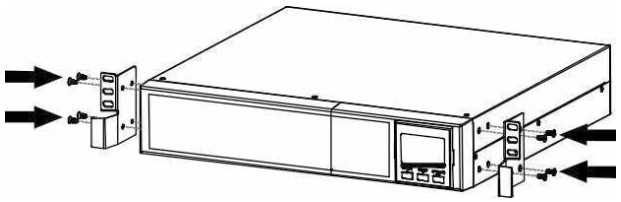

Step 2

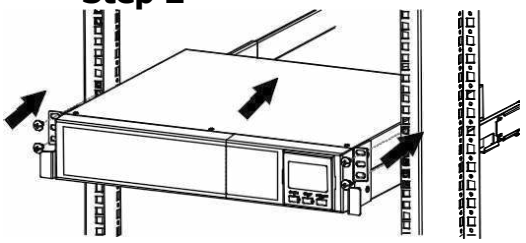

Tower Installation

Step 1 **Step 2** **Step 3**

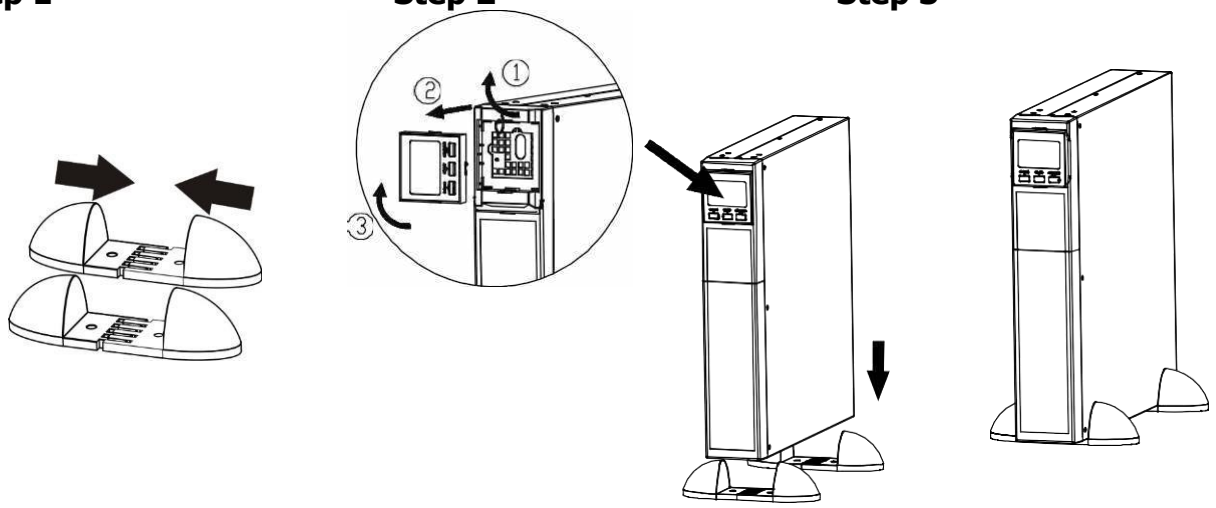

2-4. Setup the UPS

Before installing the UPS, please read below to select proper location to install UPS.

1. UPS should be placed on the flat and clean surface. Place it in an area away from vibration, dust, humidity, high temperature, flammable liquids, gases, corrosive and conductive contaminants. Install the UPS indoors in a clean environment, where it is away from window and door. Maintain minimum clearance of 100mm in the bottom of the UPS to avoid dust and high temperature.

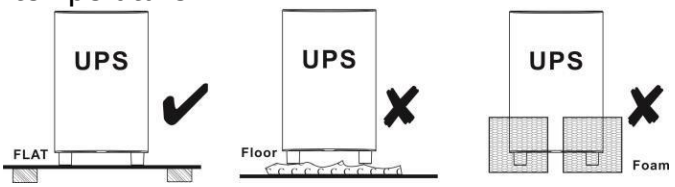

2. Maintain an ambient temperature range of 0ºC to 45ºC for UPS optimal operation. For every 5ºC above 45ºC, the UPS will derate 12% of nominal capacity at full load. The highest working temperature requirement for UPS operation is 50ºC.
3. It's required to maintain maximum altitude of 1000m to keep UPS normal operation at full load UPS. If it's used in high altitude area, please reduce connected load. Altitude derating power with connected loads for UPS normal operation is listed as below:

Altitude m	Derating factor[1)]
1 000	1.0
1 500	0.95
2 000	0.91
2 500	0.86
3 000	0.82
3 500	0.78
4 000	0.74
4 500	0.7
5 000	0.67
NOTE - Note to table 1	
Based on density of dry air = 1.225 kg/m³ at sea-level, +15 °C.	
[1)] Since fans lose efficiency with altitude, forced air-cooled equipment will have a smaller derating	

4. Place UPS:

It's equipped with fan for cooling. Therefore, place the UPS in a well-ventilated area. It's required to maintain minimum clearance of 100mm in the front of the UPS and 300mm in the back and two sides of the UPS for heat dissipation and easy-maintenance.

5. Connect to External Battery Pack

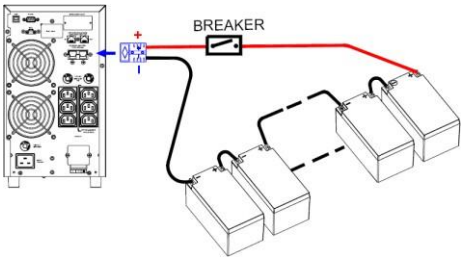

When connecting external battery packs, please be sure to connect polarity correctly. Connect positive pole of battery pack to positive pole of external battery connector in UPS and negative pole of battery pack to negative pole of external battery connector in UPS. Polarity misconnection will cause UPS internal fault. It's recommended to add one breaker between positive pole of battery pack and positive pole of external battery connector in UPS to prevent damage to battery packs from internal fault.
The required specification of breaker: voltage ≧ 1.25 x battery voltage/set; current ≧ 50A
Please choose battery size and connected numbers according to backup time requirement and UPS specifications. To extend battery lifecycle, it's recommended to use them in the temperature range of 15ºC to 25ºC.

Step 1: External battery connection
Follow the right chart to make external battery connection.

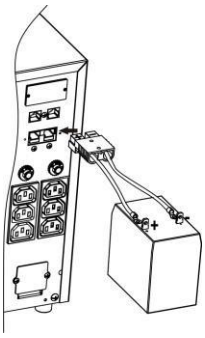

Step 2: UPS input connection
Plug the UPS into a two-pole, three-wire, grounded receptacle only. Avoid using extension cords.

- For 200/208/220/230/240VAC models: The power cord is supplied in the UPS package.
- For 100/110/115/120/127VAC models: The power cord is attached to the UPS. The input plug is a NEMA 5-15P for 1K and 1.5K models, NEMA 5-20P for 2K model and NEMA 5-30P for 3K model.

Note: Check if the site wiring fault indicator lights up in LCD panel. It will be illuminated when the UPS is plugged into an improperly wired utility power outlet (Refer to Troubleshooting section). Please also check if there is a circuit breaker against overcurrent and short circuit between the mains and AC input of the UPS for safety operation. The recommended protection value as following:

- For 200/208/220/230/240VAC models: 10A for the 1K and 1.5K models, 16A for the 2K and 3K models.
- For 100/110/115/120/127VAC models: 15A for the 1K and 1.5K models, 20A for 2K model and 30A for 3K model.

Step 3: UPS output connection
There two kinds of outputs: programmable outlets and general outlets. Please connect non-critical devices to the programmable outlets and critical devices to the general outlets. During power failure, you may extend the backup time to critical devices by setting shorter backup time for non-critical devices.

Step 4: Communication connection
Communication port:

USB port ***RS-232 port*** ***Intelligent slot***

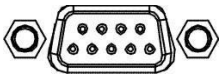
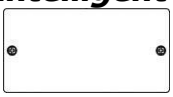

To allow for unattended UPS shutdown/start-up and status monitoring, connect the communication cable one end to the USB/RS-232 port and the other to the communication port of your PC. With the monitoring software installed, you can schedule UPS shutdown/start-up and monitor UPS status through PC.

The UPS is equipped with intelligent slot perfect for either SNMP or AS400 card. When installing either SNMP or AS400 card in the UPS, it will provide advanced communication and monitoring options.

Step 5: Network connection
Network/Fax/Phone surge port

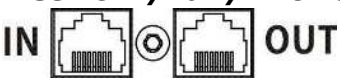

Connect a single modem/phone/fax line into surge-protected "IN" outlet on the back panel of the UPS unit. Connect from "OUT" outlet to the equipment with another modem/fax/phone line cable.

Step 6: Disable and enable EPO function

This UPS is equipped with EPO function. By default, the UPS is delivered from factory with Pin 1 and pin 2 closed (a metal plate is connected to Pin 1 and Pin2) for UPS normal operation. To activate EPO function, remove two screws on EPO port and metal plate will be removed.

Note: The EPO function logic can be set up via LCD setting. Please refer to program 16 in UPS setting for the details.

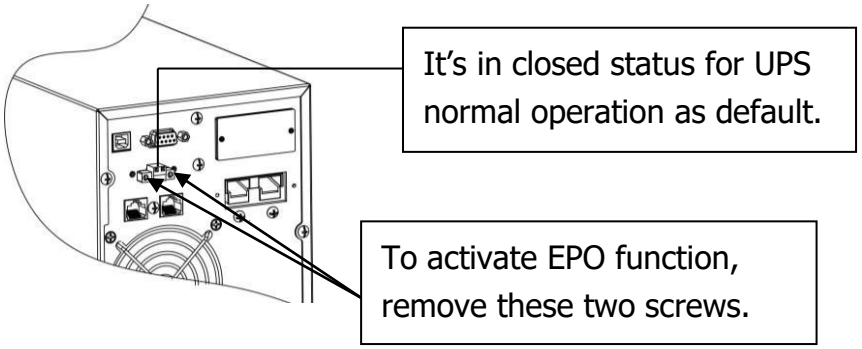

Step 7: Turn on the UPS

Press the ON/Mute button on the front panel for two seconds to power on the UPS.

Note: The battery charges fully during the first five hours of normal operation. Do not expect full battery run capability during this initial charge period.

Step 8: Install software

For optimal computer system protection, install UPS monitoring software to fully configure UPS shutdown. Use supplied RS-232 or USB communication cable to connect RS-232/USB port of UPS and RS-232/USB port of PC. Then, follow below steps to install monitoring software.

1. Insert the included installation CD into CD-ROM drive and then follow the on-screen instructions to proceed software installation. If there no screen shows 1 minute after inserting the CD, please execute setup.exe file for initiating software installation.

2. Follow the on-screen instructions to install the software.
3. When your computer restarts, the monitoring software will appear as an orange plug icon located in the system tray, near the clock.

2-5. Battery Replacement (Only for RT Models)

NOTICE: This UPS is equipped with internal batteries and user can replace the batteries without shutting down the UPS or connected loads.(hot-swappable battery design) Replacement is a safe procedure, isolated from electrical hazards.

CAUTION!! Consider all warnings, cautions, and notes before replacing batteries.

Note: Upon battery disconnection, equipment is not protected from power outages.

Step 1

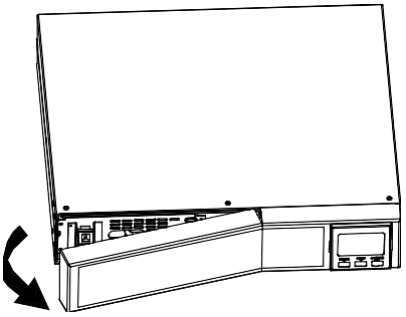

Remove front panel.

Step 2

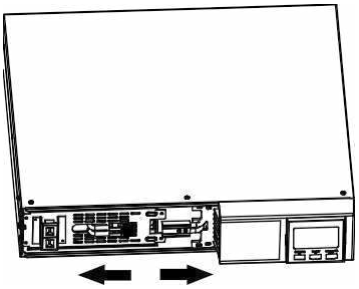

Disconnect battery wires.

Step 3

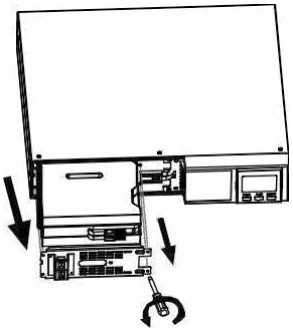

Pull out the battery box by removing two screws on the front panel.

Step 4

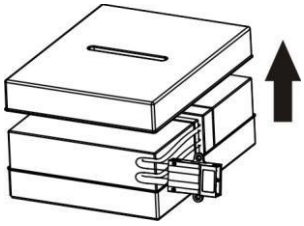

Remove the top cover of battery box and replace the inside batteries.

Step 5

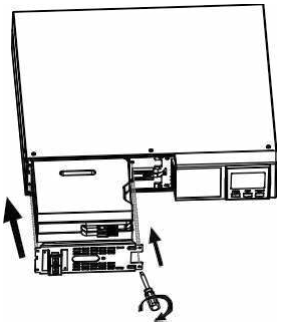

After replacing the batteries, put the battery box back to original location and screw it tightly.

Step 6

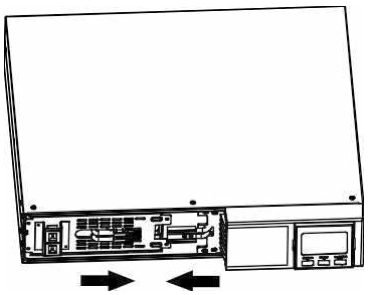

Re-connect the battery wires.

Step 7

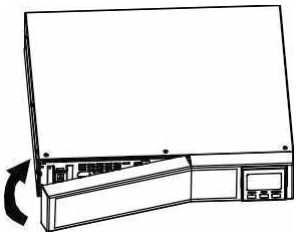

Put the front panel back to the unit.

2-6. Battery Kit Assembly (option for RT Models)

NOTICE: Please assemble battery kit first before installing it inside of UPS. Please select correct battery kit procedure below to assemble it.

2-battery kit

Step 1: Remove adhesive tapes.

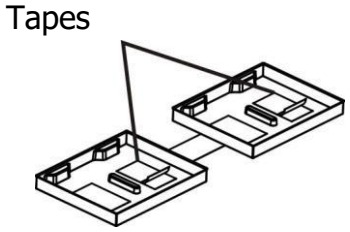

Step 2: Connect all battery terminals by following below chart.

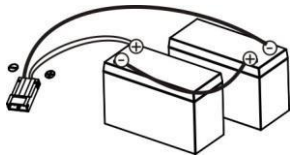

Step 3: Put assembled battery packs on one side of plastic shells.

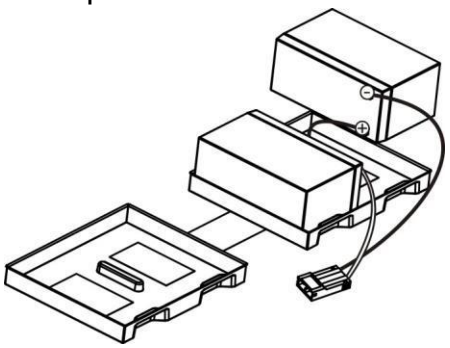

Step 4: Cover the other side of plastic shell as below chart. Then, battery kit is assembly well.

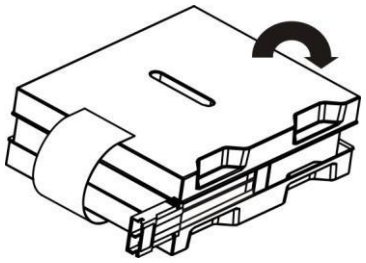

3-battery kit

Step 1: Remove adhesive tapes.

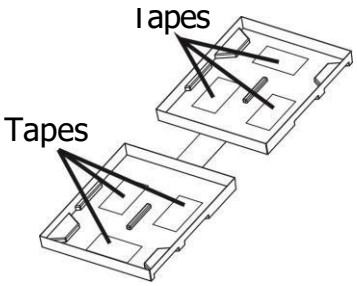

Step 2: Connect all battery terminals by following below chart.

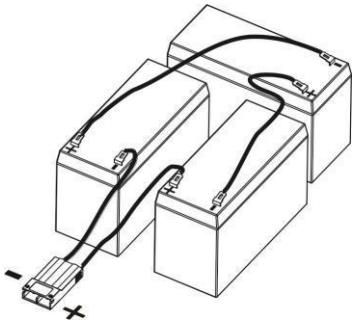

Step 3: Put assembled battery packs on one side of plastic shells as below chart.

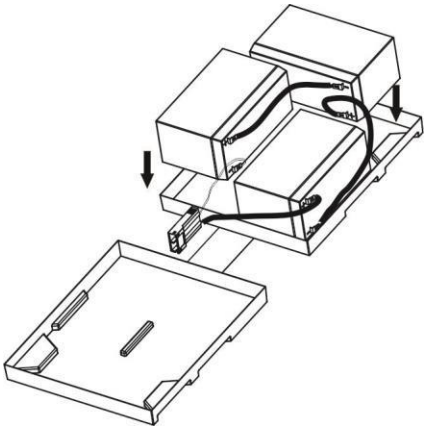

Step 4: Cover the other side of plastic shell as below chart. Then, battery kit is assembly well.

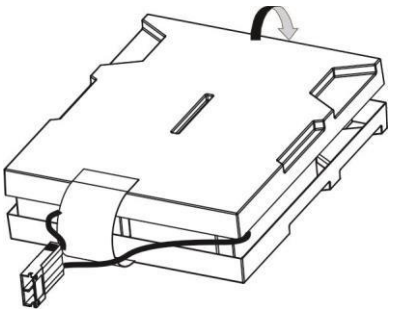

4-battery kit

Step 1: Remove adhesive tapes.

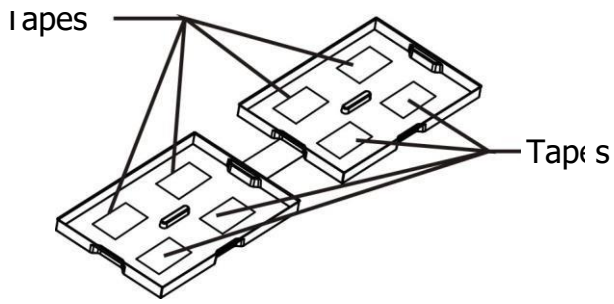

Step 2: Connect all battery terminals by following below chart.

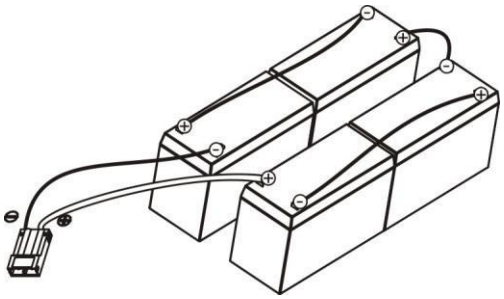

Step 3: Put assembled battery packs on one side of plastic shells.

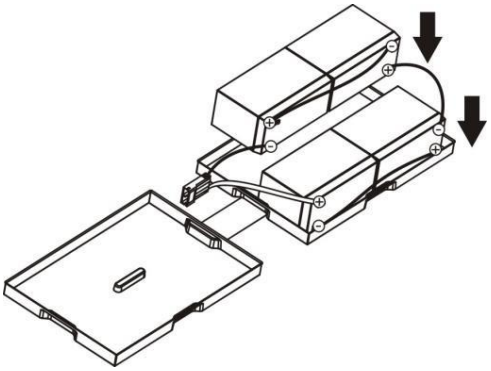

Step 4: Cover the other side of plastic shell as below chart. Then, battery kit is assembly well.

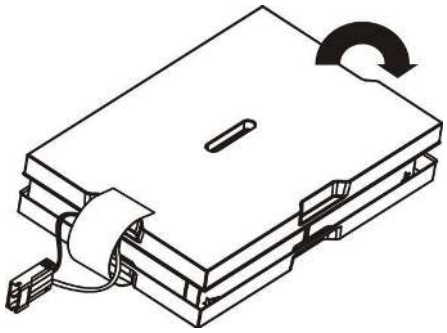

6-battery kit

Step 1: Remove adhesive tapes.

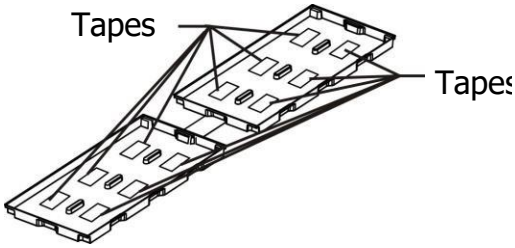

Step 2: Connect all battery terminals by following below chart.

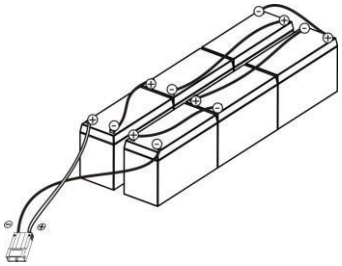

Step 3: Put assembled battery packs on one side of plastic shells.

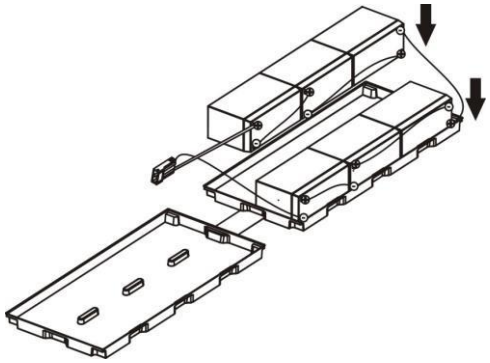

Step 4: Cover the other side of plastic shell as below chart. Then, battery kit is assembly well.

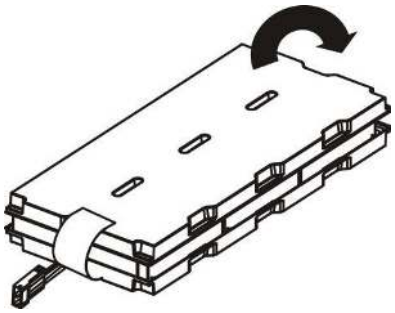

3. Operations

3-1. Button operation

Button	Function
ON/Mute Button	➢ Turn on the UPS: Press and hold ON/Mute button for at least 2 seconds to turn on the UPS. ➢ Mute the alarm: After the UPS is turned on in battery mode, press and hold this button for at least 3 seconds to disable or enable the alarm system. But it's not applied to the situations when warnings or errors occur. ➢ Up key: Press this button to display previous selection in UPS setting mode. ➢ Switch to UPS self-test mode: Press ON/Mute buttons for 3 seconds to enter UPS self-testing while in AC mode, ECO mode, or converter mode.
OFF/Enter Button	➢ Turn off the UPS: Press and hold this button at least 2 seconds to turn off the UPS. UPS will be in standby mode under power normal or transfer to Bypass mode if the Bypass enable setting by pressing this button. ➢ Confirm selection key: Press this button to confirm selection in UPS setting mode.
Select Button	➢ Switch LCD message: Press this button to change the LCD message for input voltage, input frequency, input current, battery voltage, battery current, battery capacity, ambient temperature, output voltage, output frequency, load current and load percent. ➢ Setting mode: Press and hold this button for 3 seconds to enter UPS setting mode when Standby and Bypass mode. ➢ Down key: Press this button to display next selection in UPS setting mode.
ON/Mute + Select Button	➢ Switch to bypass mode: When the main power is normal, press ON/Mute and Select buttons simultaneously for 3 seconds. Then UPS will enter to bypass mode. This action will be ineffective when the input voltage is out of acceptable range. ➢ Exit setting mode or return to the upper menu: When working in setting mode, press ON/Mute and Select buttons simultaneously for 0.2 seconds to return to the upper menu. If it's already in top menu, press these two buttons at the same time to exit the setting mode.

3-2. LCD Panel

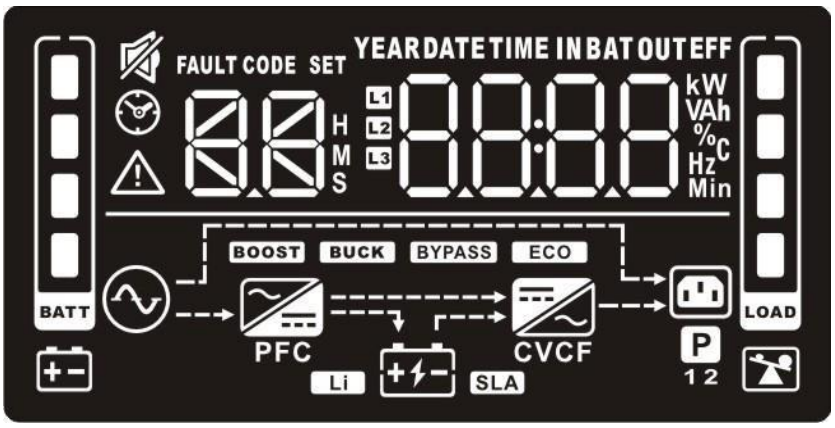

Display	Function
Backup time information	
H M S	Indicates the estimated backup time. H: hours, M: minute, S: second.
Configuration and fault information	
SET	Indicates the configuration items, and the configuration items are listed in details in section 3-5.
FAULT CODE	Indicates the warning and fault codes, and the codes are listed in details in section 3-7 and 3-8.
Mute operation	
	Indicates that the UPS alarm is disabled.
Input, Battery, Temperature, Output & Load information	
IN BAT OUT kW VAh % °C Hz	IIndicate the input voltage, input frequency, input current, battery voltage, battery current, battery capacity, ambient temperature, output voltage, output frequency, load current and load percent. k: kilo, W: watt, V: voltage, A: ampere, %: percent, ℃: centigrade degree, Hz: frequency
Load information	
LOAD	Indicates the load level by 0-24%, 25-49%, 50-74% and 75-100%.
	Indicates overload.
Programmable outlets information	
P	Indicates that programmable management outlets are working.
Mode operation information	
	Indicates the UPS connects to the mains.
+ -	Indicates the battery is working.
	Indicates charging status
BYPASS	Indicates the bypass circuit is working.
ECO	Indicates the ECO mode is enabled.
	Indicates the AC to DC circuit is working.
PFC	Indicates the PFC circuit is working.
	Indicates the inverter circuit is working.
CVCF	Indicates the UPS is working in converter mode.
	Indicates the output is working.
Battery information	
BAT'T	Indicates the battery level by 0-24%, 25-49%, 50-74%, and 75-100%.
+-	Indicates low battery.

3-3. Audible Alarm

Battery Mode	Sounding every 5 seconds
Low Battery	Sounding every 2 seconds
Overload	Sounding every second
Fault	Continuously sounding
Bypass Mode	Sounding every 10 seconds

3-4. LCD display wordings index

Abbreviation	Display content	Meaning
ENA	ENA	Enable
DIS	dIS	Disable
ESC	ESC	Escape
HLS	HLS	High loss
LLS	LLS	Low loss
AO	AO	Active open
AC	AC	Active close
EAT	EAt	Estimated autonomy time
RAT	rAt	Running autonomy time
SD	Sd	Shutdown
OK	OK	OK
ON	On	ON
BL	bL	Battery Low
OL	OL	Over Load
OI	OI	Over input current
NC	nC	Battery No Connect
OC	OC	Over Charge
SF	SF	Site wiring fault
EP	EP	EPO
TP	tP	Temperature
CH	CH	Charger
BF	bF	Battery Fault
BV	bv	Bypass Out Range
FU	FU	Bypass frequency unstable
BR	bR	Battery Replace
EE	EE	EEPROM error

3-5. UPS Setting

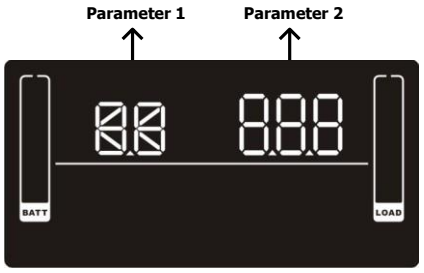

There are three parameters to set up the UPS.

Parameter 1: It's for program alternatives. Refer to below table.

Parameter 2 is the setting options or values for each program.

- **01: Output voltage setting**

Interface	Setting
	Parameter 2: Output voltage For 200/208/220/230/240 VAC models, you may choose the following output voltage: **200:** presents output voltage is 200Vac **208:** presents output voltage is 208Vac **220:** presents output voltage is 220Vac **230:** presents output voltage is 230Vac (Default) **240:** presents output voltage is 240Vac For 100/110/115/120/127 VAC models, you may choose the following output voltage: **100:** presents output voltage is 100Vac **110:** presents output voltage is 110Vac **115:** presents output voltage is 115Vac **120:** presents output voltage is 120Vac (Default) **127:** presents output voltage is 127Vac

- **02: Frequency Converter enable/disable**

Interface	Setting
	Parameter 2: Enable or disable converter mode. You may choose the following two options: **CF ENA:** converter mode enable **CF DIS:** converter mode disable (Default)

- **03: Output frequency setting**

Interface	Setting
	Parameter 2: Output frequency setting. You may set the initial frequency on battery mode: **BAT 50:** presents output frequency is 50Hz **BAT 60:** presents output frequency is 60Hz If converter mode is enabled, you may choose the following output frequency: **CF 50:** presents output frequency is 50Hz **CF 60:** presents output frequency is 60Hz

- **04: ECO enable/disable**

Interface	Setting
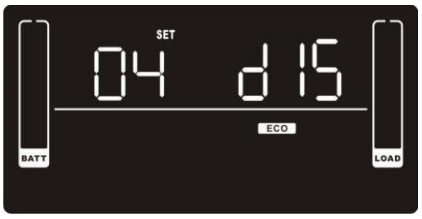	**Parameter 2:** Enable or disable ECO function. You may choose the following two options: **ENA:** ECO mode enable **DIS:** ECO mode disable (Default)

- **05: ECO voltage range setting**

Interface	Setting
 	Parameter 2: Set the acceptable high voltage point and low voltage point for ECO mode by pressing Down key or Up key. **HLS:** High loss voltage in ECO mode in parameter 2. For 200/208/220/230/240 VAC models, the setting range in parameter 3 is from +7V to +24V of the nominal voltage. (Default: +12V) For 100/110/115/120/127 VAC models, the setting range in parameter 3 is from +3V to +12V of the nominal voltage. (Default: +6V) **LLS:** Low loss voltage in ECO mode in parameter 2. For 200/208/220/230/240 VAC models, the setting range in parameter 3 is from -7V to -24V of the nominal voltage. (Default: -12V) For 100/110/115/120/127 VAC models, the setting voltage in parameter 3 is from -3V to -12V of the nominal voltage. (Default: -6V)

- **06: Bypass enable/disable when UPS is off**

Interface	Setting
	Parameter 2: Enable or disable Bypass function. You may choose the following two options: **ENA:** Bypass enable **DIS:** Bypass disable (Default)

- **07: Bypass voltage range setting**

Interface	Setting
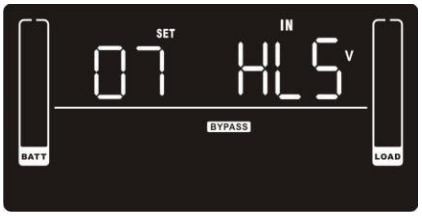 	**Parameter 2:** Set the acceptable high voltage point and acceptable low voltage point for Bypass mode by pressing the Down key or Up key. **HLS:** Bypass high voltage point For 200/208/220/230/240 VAC models: **230-264:** setting the high voltage point in parameter 3 from 230Vac to 264Vac. (Default: 264Vac) For 100/110/115/120/127 VAC models: **120-140:** setting the high voltage point in parameter 3 from 120Vac to 140Vac. (Default: 132Vac) **LLS:** Bypass low voltage point For 200/208/220/230/240 VAC models: **170-220:** setting the low voltage point in parameter 3 from

	170Vac to 220Vac. (Default: 170Vac) For 100/110/115/120/127 VAC models: **85-115:** setting the low voltage point in parameter 3 from 85Vac to 115Vac. (Default: 85Vac)

- **08: Bypass frequency range setting**

Interface	Setting
  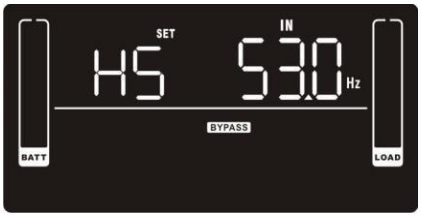	**Parameter 2:** Set the acceptable high frequency point and acceptable low frequency point for Bypass mode by pressing the Down key or Up key. **HLS:** Bypass high frequency point For 50Hz output frequency models: **51-55Hz:** setting the frequency high loss point from 51Hz to 55HZ(Default: 53.0Hz) For 60Hz output frequency models: **61-65Hz:** setting the frequency high loss point from 61Hz to 65Hz(Default: 63.0Hz) **LLS:** Bypass low Frequency point For 50Hz output frequency models: **45-49Hz:** setting the frequency low loss point from 45Hz to 49HZ(Default: 47.0Hz) For 60Hz output frequency models: **55-59Hz:** setting the frequency low loss point from 55Hz to 59Hz(Default: 57.0Hz)

- **09: Programmable outlets enable/disable**

Interface	Setting
	Parameter 2: Enable or disable programmable outlets. **ENA:** Programmable outlets enable **DIS:** Programmable outlets disable (Default)

- **10: Programmable outlets setting**

Interface	Setting
	Parameter 2: Set up backup time limits for programmable outlets. **0-999:** setting the backup time limits in minutes from 0-999 for programmable outlets which connect to non-critical devices on battery mode. (Default: 999)

- **11: Autonomy limitation setting**

Interface	Setting
	Parameter 2: Set up backup time on battery mode for general outlets. **0-999:** setting the backup time in minutes from 0-999 for general outlets on battery mode. **DIS:** Disable the autonomy limitation and the backup time will depend on battery capacity. (Default) **Note:** When setting as “0”, the backup time will be only 10 seconds.

- **12: Battery total AH setting**

Interface	Setting
	Parameter 2: Set up the battery total AH of the UPS. **7-999:** setting the battery total capacity from 7-999 in AH. Please set the correct battery total capacity if external battery bank is connected.

- **13: Maximum charger current setting**

Interface	Setting
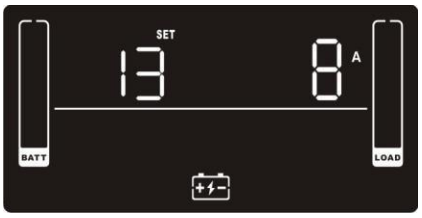	**Parameter 2:** Set up the charger maximum current. For low voltage model with 24/36/48VDC **1/2/4/6/8:** setting the charger maximum current 1/2/4/6/8 in Ampere. (Default: 2A) For high voltage model with 24/36/48VDC **1/2/4/6/8/10/12:** setting the charger maximum current 1/2/4/6/8/10/12 in Ampere. (Default: 2A) For low voltage and high voltage model with 72/96VDC **1/2/4/6/8:** setting the charger maximum current 1/2/4/6/8 in Ampere. (Default: 2A) Note: Please set the appropriate charger current based on battery capacity used. The recommended charging current is 0.1C~0.3C of battery capacity as following table for reference.

Battery capacity(AH)	Total charging current (A)
7~20	2
20~40	4
40~60	6
60~80	8
80~100	10
100~150	12

- **14: Charger boost voltage setting**

Interface	Setting
	Parameter 2: Set up the charger boost voltage. **2.25-2.40:** setting the charger boost voltage from 2.25 V/cell to 2.40V/cell. (Default: 2.36V/cell)

- **15: Charger float voltage setting**

Interface	Setting
	Parameter 2: Set up the charger float voltage. **2.20-2.33:** setting the charger float voltage from 2.20 V/cell to 2.33V/cell. (Default: 2.28V/cell)

- **16: EPO logic setting**

Interface	Setting
	Parameter 2: Set up the EPO function control logic. **AO:** Active Open (Default). When AO is selected as EPO logic, it will activate EPO function with Pin 1 and Pin 2 in open status. **AC:** Active Close. When AC is selected as EPO logic, it will activate EPO function with Pin 1 and Pin 2 in close status.

- **17: External output isolation transformer connection**

Interface	Setting
	Parameter 2: Allow or disallow external output isolation transformer connection. **ENA:** If selected, it's allowed to connect to an external output isolation transformer. **DIS:** If selected, it's not allowed to connect to external output isolation transformer. (Default)

- **18: Display setting for autonomy time**

Interface	Setting
	Parameter 2: Set up the display setting for autonomy time **EAT:** If EAT is selected, it will display the remaining autonomy time. (Default) **RAT:** If RAT is selected, it will show accumulated autonomy time so far.

- **19: Acceptable input voltage range setting**

Interface	Setting
 	Parameter 2: Set the acceptable high voltage point and acceptable low voltage point for input voltage range by pressing the Down key or Up key. **HLS:** Input high voltage point For 200/208/220/230/240 VAC models: **280/290/300:** setting the high voltage point in parameter 2. (Default: 300Vac) For 100/110/115/120/127 VAC models: **140/145/150:** setting the high voltage point in parameter 2. (Default: 150Vac) **LLS:** Bypass low voltage point For 200/208/220/230/240 VAC models: **110/120/130/140/150/160:** setting the low voltage point in parameter 2. (Default: 110Vac) For 100/110/115/120/127 VAC models: **55/60/65/70/75/80:** setting the low voltage point in parameter 2. (Default: 55Vac)

- **00: Exit setting**

Interface	Setting
	Exit the setting mode.

3-6. Operating Mode Description

Operating mode	Description	LCD display
Online mode	When the input voltage is within acceptable range, UPS will provide pure and stable AC power to output. The UPS will also charge the battery at online mode.	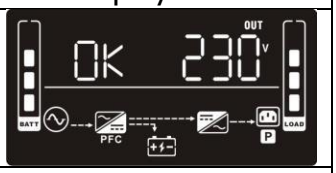
ECO mode	Energy saving mode: When the input voltage is within voltage regulation range, UPS will bypass voltage to output for energy saving. The UPS will also charge the battery at ECO mode.	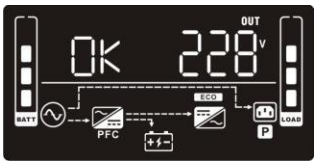
Frequency Converter mode	When input frequency is within 40 Hz to 70 Hz, the UPS can be set at a constant output frequency, 50 Hz or 60 Hz. The UPS will still charge battery under this mode.	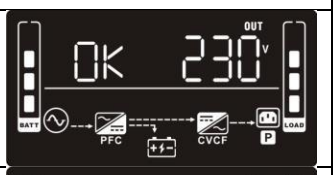
Battery mode	When the input voltage is beyond the acceptable range or power failure, the UPS will backup power from battery and alarm is sounding every 5 seconds.	
Bypass mode	When input voltage is within acceptable range but UPS is overload, UPS will enter bypass mode or bypass mode can be set by front panel. Alarm is sounding every 10 seconds.	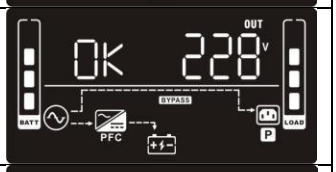
Standby mode	UPS is powered off and no output supply power, but still can charge batteries.	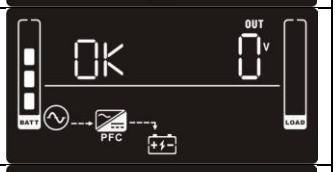
Fault mode	When a fault has occurred, the ERROR icon and the fault code will be displayed.	

3-7. Faults Reference Code

Fault event	Fault code	Icon	Fault event	Fault code	Icon
Bus start fail	01	x	Battery voltage too high	27	x
Bus over	02	x	Battery voltage too low	28	x
Bus under	03	x	Charger output short	2A	x
Inverter soft start fail	11	x	Over temperature	41	x
Inverter voltage high	12	x	Overload	43	
Inverter voltage Low	13	x	Charger failure	45	x
Inverter output short	14	x	Over input current	49	x

3-8. Warning indicator

Warning	Icon (flashing)	Code	Alarm
Low Battery		bL	Sounding every 2 seconds
Overload		OL	Sounding every second
Over input current		OI	Sounding 2 beep every 10 seconds
Battery is not connected		nC	Sounding every 2 seconds
Over Charge		OC	Sounding every 2 seconds
Site wiring fault		SF	Sounding every 2 seconds
EPO enable		EP	Sounding every 2 seconds
Over temperature		tP	Sounding every 2 seconds
Charger failure		CH	Sounding every 2 seconds
Battery fault		bF	Sounding every 2 seconds (At this time, UPS is off to remind users something wrong with battery)
Out of bypass voltage range	BYPASS	bV	Sounding every 2 seconds
Bypass frequency unstable		FU	Sounding every 2 seconds
Battery replacement		bt	Sounding every 2 seconds
EEPROM error		EE	Sounding every 2 seconds

NOTE: "Site Wiring Fault" function can be enabled/disabled via software. Please check software manual for the details.

4. Troubleshooting

If the UPS system does not operate correctly, please solve the problem by using the table below.

Symptom	Possible cause	Remedy
No indication and alarm even though the mains is normal.	The AC input power is not connected well.	Check if input power cord firmly connected to the mains.
	The AC input is connected to the UPS output.	Plug AC input power cord to AC input correctly.
The icon and the warning code EP flash on LCD display and alarm is sounding every 2 seconds.	EPO function is activated.	Set the circuit in closed position to disable EPO function.
The icons of ⚠ and ∿ and the warning code SF flash on LCD display. Alarm is sounding every 2 seconds.	Line and neutral conductors of UPS input are reversed.	Rotate mains power socket by 180° and then connect to UPS system.
The icons of ⚠ and + − and the warning code NC flash on LCD display. Alarm is sounding every 2 seconds.	The external or internal battery is incorrectly connected.	Check if all batteries are connected well.
Fault code is shown as 27 on LCD display and alarm is continuously sounding.	Battery voltage is too high or the charger is fault.	Contact your dealer.
Fault code is shown as 28 on LCD display and alarm is continuously sounding.	Battery voltage is too low or the charger is fault.	Contact your dealer.
The icons and and the warning code OL flash on LCD display. Alarm is sounding every second.	UPS is overload	Remove excess loads from UPS output.
	UPS is overloaded. Devices connected to the UPS are fed directly by the electrical network via the Bypass.	Remove excess loads from UPS output.
	After repetitive overloads, the UPS is locked in the Bypass mode. Connected devices are fed directly by the mains.	Remove excess loads from UPS output first. Then shut down the UPS and restart it.
Fault code is shown as 49 on LCD display and alarm is continuously sounding.	UPS is over input current.	Remove excess loads from UPS output.
Fault code is shown as 43 and the icon is lighting on LCD display. Alarm is continuously sounding.	The UPS shut down automatically because of overload at the UPS output.	Remove excess loads from UPS output and restart it.

Symptom	Possible cause	Remedy
Fault code is shown as 14 on LCD display and alarm is continuously sounding.	The UPS shut down automatically because short circuit occurs on the UPS output.	Check output wiring and if connected devices are in short circuit status.
Fault code is shown as 01, 02,03, 11, 12, 13 and 41 on LCD display and alarm is continuously sounding.	A UPS internal fault has occurred. There are two possible results: 1. The load is still supplied, but directly from AC power via bypass. 2. The load is no longer supplied by power.	Contact your dealer
Battery backup time is shorter than nominal value.	Batteries are not fully charged	Charge the batteries for at least 5 hours and then check capacity. If the problem still persists, consult your dealer.
	Batteries defect	Contact your dealer to replace the battery.
Fault code is shown as 2A on LCD display and alarm is continuously sounding.	The short circuit occurs on the charger output.	Check if battery wiring of connected external pack is in short circuit status.
Fault code is shown as 45 on LCD display. At the same time, alarm is continuously sounding.	The charger does not have output and battery voltage is less than 10V/PC.	Contact your dealer.

5. Storage and Maintenance

Operation

The UPS system contains no user-serviceable parts. If the battery service life (3~5 years at 25°C ambient temperature) has been exceeded, the batteries must be replaced. In this case, please contact your dealer.

Be sure to deliver the spent battery to a recycling facility or ship it to your dealer in the replacement battery packing material.

Storage

Before storing, charge the UPS 5 hours. Store the UPS covered and upright in a cool, dry location. During storage, recharge the battery in accordance with the following table:

Storage Temperature	Recharge Frequency	Charging Duration
-25°C - 40°C	Every 3 months	1-2 hours
40°C - 45°C	Every 2 months	1-2 hours

6. Specifications

Tower Models

MODEL		**1K 2B**	**1K 3B**	**1.5K**	**2K 4B**	**2K 6B**	**3K**
CAPACITY*		1000VA/1000W		1500VA/1500W	2000VA/2000W		3000VA / 3000W
INPUT							
Voltage Range	Low Line Transfer	160VAC/140VAC/120VAC/110VAC ± 5 % or 80VAC/70VAC/60VAC/55VAC ± 5 % (based on load percentage 100% - 80 % / 80 % - 70 % / 70 - 60 % / 60 % - 0)					
	Low Line Comeback	175VAC/155VAC/135VAC/125VAC ± 5 % or 87VAC/77VAC/67VAC/62VAC ± 5 %					
	High Line Transfer	300 VAC ± 5 % or 150 VAC ± 5 %					
	High Line Comeback	290 VAC ± 5 % or 145 VAC ± 5 %					
Frequency Range		40Hz ~ 70 Hz					
Phase		Single phase with ground					
Power Factor		≧ 0.99 @ full load					
THDi		≦ 5% @ 205-245VAC or 100~130VAC THDU < 1.6% @ input and full linear load condition					
OUTPUT							
Output voltage		200/208/220/230/240VAC or 100/110/115/120/127 VAC					
AC Voltage Regulation		± 1% (Batt. Mode)					
Frequency Range (Synchronized Range)		47 ~ 53 Hz or 57 ~ 63 Hz					
Frequency Range		50 Hz ± 0.1 Hz or 60Hz ± 0.1 Hz (Batt. Mode)					
Current Crest Ratio		3:1					
Harmonic Distortion		≦ 2 % THD (Linear Load) ; 4 % THD (Non-linear Load)					
Transfer Time	AC Mode to Batt. Mode	Zero					
	Inverter to Bypass	< 4 ms					
Waveform (Batt. Mode)		Pure Sinewave					
EFFICIENCY							
AC Mode		≧89% @ full charged battery			≧91% @ full charged battery		
ECO Mode		≧96% @ full charged battery					
Battery Mode		≧ 88%			≧ 90%		
BATTERY							
Battery Type		12V/9AH	12V/7AH	12V/9AH	12V/9AH	12V/7AH	12V/9AH
Numbers		2	3	3	4	6	6
Recharge Time		3 hours recover to 95% capacity for internal battery@ 2A charging current					
Charging Current		100/110/115/120 /127 VAC models: default 2A, max. 8A adjustable 200/208/220/230/240 VAC models: default 2A, max. 12A adjustable				Default: 2A, Max: 8A adjustable	
Charging Voltage		27.4 VDC ± 1%	41.0 VDC ± 1%	41.0 VDC ± 1%	54.7 VDC ± 1%	82.1 VDC ±1%	82.1 VDC ±1%
PHYSICAL							
Dimension, D X W X H (mm)		397 X 145 X 220			421 X 190 X 318		
Net Weight (kgs)	With battery	11.7	13.0	14.6	20.3	23.2	28.0
	Without battery	6.6	6.6	7	9.9	9.9	12.3
ENVIRONMENT							
Operation Humidity		20-95 % RH @ 0- 40°C (non-condensing)					
Noise Level		Less than 50dBA @ 1 Meter (With fan speed control)					
MANAGEMENT							
Smart RS-232 or USB		Supports Windows® 2000/2003/XP/Vista/2008/7/8/10, Linux, Unix and MAC					
Optional SNMP		Power management from SNMP manager and web browser					

* Derate capacity to 80% of capacity in Frequency converter mode and to 80% when the output voltage is adjusted to 100VAC, 200VAC or 208VAC. For 100/110/115/120/127VAC system, the output power ratings are different based on different input voltage. Please check output power rating table for the details.

** Product specifications are subject to change without further notice.

RT Models:

MODEL		1K RT-2B	1K RT-3B	1.5K RT	2K RT-4B	2K RT-6B	3K RT
CAPACITY*		1000VA/1000W		1500VA/1500W	2000VA/2000W		3000VA / 3000W
INPUT							
Voltage Range	Low Line Transfer	160VAC/140VAC/120VAC/110VAC ± 5 % or 80VAC/70VAC/60VAC/55VAC ± 5 % (based on load percentage 100% - 80 % / 80 % - 70 % / 70 - 60 % / 60 % - 0)					
	Low Line Comeback	175VAC/155VAC/135VAC/125VAC ± 5 % or 87VAC/77VAC/67VAC/62VAC ± 5 %					
	High Line Transfer	300 VAC ± 5 % or 150 VAC ± 5 %					
	High Line Comeback	290 VAC ± 5 % or 145 VAC ± 5 %					
Frequency Range		40Hz ~ 70 Hz					
Phase		Single phase with ground					
Power Factor		≧ 0.99 @ full load					
THDi		≦ 5% @ 205-245VAC or 100~130VAC THDU < 1.6% @ input and full linear load condition					
OUTPUT							
Output voltage		200/208/220/230/240VAC or 100/110/115/120/127 VAC					
AC Voltage Regulation		± 1% (Batt. Mode)					
Frequency Range (Synchronized Range)		47 ~ 53 Hz or 57 ~ 63 Hz					
Frequency Range		50 Hz ± 0.1 Hz or 60Hz ± 0.1 Hz (Batt. Mode)					
Current Crest Ratio		3:1					
Harmonic Distortion		≦ 2 % THD (Linear Load) ; 4 % THD (Non-linear Load)					
Transfer Time	AC Mode to Batt. Mode	Zero					
	Inverter to Bypass	< 4 ms					
Waveform (Batt. Mode)		Pure Sinewave					
EFFICIENCY							
AC Mode		≧89% @ full charged battery			≧91% @ full charged battery		
ECO Mode		≧96% @ full charged battery					
Battery Mode		≧ 88%			≧ 90%		
BATTERY							
Battery Type		12V/9AH	12V/7AH	12V/9AH	12V/9AH	12V/7AH	12V/9AH
Numbers		2	3	3	4	6	6
Recharge Time		3 hours recover to 95% capacity for internal battery@ 2A charging current					
Charging Current		100/110/115/120 /127 VAC models: default 2A, max. 8A adjustable 200/208/220/230/240 VAC models: default 2A, max. 12A adjustable				Default: 2A, Max: 8A adjustable	
Charging Voltage		27.4 VDC ± 1%	41.0 VDC ± 1%	41.0 VDC ± 1%	54.7 VDC ± 1%	82.1 VDC ±1%	82.1 VDC ±1%
PHYSICAL							
Dimension, D X W X H (mm)		410 x 438 x 88			510 x 438 x 88	630 x 438 x 88	
Net Weight (kgs)	With battery	11.6	14.1	15.5	19.5	23.3	27.5
	Without battery	6.6	7.8	8.1	9.4	10.6	12.4
ENVIRONMENT							
Operation Humidity		20-95 % RH @ 0- 40°C (non-condensing)					
Noise Level		Less than 50dBA @ 1 Meter (With fan speed control)					
MANAGEMENT							
Smart RS-232 or USB		Supports Windows® 2000/2003/XP/Vista/2008/7/8/10, Linux, Unix and MAC					
Optional SNMP		Power management from SNMP manager and web browser					

* Derate capacity to 80% of capacity when the output voltage is adjusted to 100VAC, 200VAC or 208VAC. For 100/110/115/120/127VAC system, the output power ratings are different based on different input voltage. Please check output power rating table for the details.

** Product specifications are subject to change without further notice.

Output Power Rating Table (only for 100/110/115/120/127 VAC system)

Model name	Input rating	Output rating
1K 2B, 1K 3B, 1K RT-2B, 1K RT-3B	110-127Vac, 50/60Hz, 12A, 1Ø	100/110/115/120/125/127Vac, 50/60Hz, 1000VA/1000W, 1Ø, 10A
1.5K, 1.5K RT	110-127Vac, 50/60Hz, 12A, 1Ø	100/110/115/120/125/127Vac, 50/60Hz, 1Ø 1500VA/1450W (@127Vac input) ; 1500VA/1430W (@125Vac input) ; 1500VA/1300W (@120Vac input) ; 1500VA/1270W (@115Vac input) ; 1500VA/1200W (@110Vac input) ; 1500VA/1040W (@100Vac input)
2K 4B, 2K 6B, 2K RT-4B, 2K RT-6B	110-127Vac, 50/60Hz, 16A, 1Ø	100/110/115/120/125/127Vac, 50/60Hz, 1Ø 2000VA/1930W (@127Vac input) ; 2000VA/1930W (@125Vac input) ; 2000VA/1850W (@120Vac input) ; 2000VA/1740W (@115Vac input) ; 2000VA/1640W (@110Vac input) ; 2000VA/1500W (@100Vac input)
3K, 3K RT	110-127Vac, 50/60Hz, 24A, 1Ø	100/110/115/120/125/127Vac, 50/60Hz, 1Ø 3000VA/2880W (@127Vac input) ; 3000VA/2850W (@125Vac input) ; 3000VA/2740W (@120Vac input) ; 3000VA/2650W (@115Vac input) ; 3000VA/2500W (@110Vac input) ; 3000VA/2300W (@100Vac input)

Battery Pack Specification

Model	BC·T-18Ah24V	BC·T-18Ah36V	BC·T-18Ah48V	BC·T-27Ah48V	BC·T-18Ah72V
Used with UPS Models	1K 2B	1K 3B 1.5K 3B	2K 4B	2K 4B	2K 6B 3K
Battery Type	12V 9Ah	12V 9Ah	12V 9Ah	12V 9Ah	12V 9Ah
Battery Numbers	4	6	8	12	12
Dimensions(DxWxH)	397x145 x 220			421x190 x 318	
Net Weight(kgs)	15.8	20.6	26.2	40.4	40.4

NOTE: Battery pack should be used with corresponded UPS.

Model	BC·RT-18Ah24V-280	BC·RT-18Ah24V	BC·RT-18Ah36V	BC·RT-18Ah48V	BC·RT-18Ah72V
Used with UPS Models	1K RT-2B	1K RT-2B	1K RT-3B 1.5K RT	2K RT-4B	2K RT-6B 3K RT
Battery Type	12V 9Ah	12V 9Ah	12V 9Ah	12V 9Ah	12V 9Ah
Battery Numbers	4	4	6	8	12
Dimensions (DxWxH) mm	280 x 438 x 88	380 x 438 x 88		480 x 438 x 88	600 x 438 x 88
Net Weight(kgs)	14.9	17.1	21.5	29	41.2

NOTE: Battery pack should be used with corresponded UPS.