VERSION 1.0
AUGUST 2023
702P08980

Xerox® VersaLink® B415 Multifunction Printer

User Guide

xerox™

© 2023 Xerox Corporation. All rights reserved.

Xerox®, VersaLink®, Global Print Driver®, MeterAssistant®, PagePack®, Scan to PC Desktop®, SMARTsend®, SuppliesAssistant®, Xerox Extensible Interface Platform®, and Xerox Secure Access Unified ID System® are trademarks of Xerox Corporation in the United States and/or other countries.

Adobe, Adobe PDF logo, Acrobat, and PostScript are either registered trademarks or trademarks of Adobe in the United States and/or other countries.

Android, Google Play, Google Drive, and Google Chrome are trademarks of Google LLC.

Apache® is a trademark of the Apache Software Foundation in the United States and/or other countries.

Apple, App Store, AirPrint, Bonjour, iBeacon, iPad, iPhone, iPod, iPod touch, Mac, Macintosh, macOS, and OS X are trademarks of Apple, Inc., registered in the U.S. and other countries and regions.

The Bluetooth® word mark is a registered trademark owned by the Bluetooth SIG, Inc. and any use of such marks by Xerox is under license.

Domino is a trademark of HCL Technologies Limited.

DROPBOX and the Dropbox Logo are trademarks of Dropbox, Inc.

Debian is a registered trademark of Software in the Public Interest, Inc.

ENERGY STAR and ENERGY STAR mark are registered trademarks owned by the U S. Environmental Protection Agency.

HP®, HP-UX®, JetDirect, and PCL® are trademarks of the Hewlett-Packard Company.

IBM, AIX, and PowerPC are trademarks or registered trademarks of International Business Machines Corporation registered in many jurisdictions worldwide.

IOS is a registered trademark or trademark of Cisco Systems, Inc. and/or its affiliates in the United States and certain other countries.

Itanium is a trademark of Intel Corporation or its subsidiaries.

Kerberos is a trademark of the Massachusetts Institute of Technology (MIT).

Linux® is the registered trademark of Linus Torvalds in the U.S. and other countries.

Microsoft, Active Directory, Azure, Excel, Microsoft Exchange Server, Microsoft 365, Office 365, OneDrive, Windows, Windows Server, Windows Vista are trademarks of the Microsoft group of companies.

Mopria™ is a registered and/or unregistered trademark of Mopria Alliance, Inc. in the United States and other countries. Unauthorized use is strictly prohibited.

Netscape is a trademark of AOL Membership Services LLC.

Novell, NetWare, Novell Directory Services, and NDS are registered trademarks or service marks of Novell, Inc. in the United States and other countries.

OpenLDAP is a registered trademark of the OpenLDAP Foundation.

SPARC is a registered trademark of SPARC International, Inc. in the United States and other countries.

Sun and Solaris are registered trademarks of Oracle and/or its affiliates.

ThinPrint is a registered trademark of Cortado AG in the United States and other countries.

Trellix, ePolicy Orchestrator, and ePO are trademarks of Musarubra US LLC.

UNIX® is a registered trademark of The Open Group.

Wi-Fi® and Wi-Fi Direct® are registered trademarks of Wi-Fi Alliance®.

Wi-Fi Protected Setup™, WPA™, WPA2™, and WPA3™ are trademarks of Wi-Fi Alliance®.

BR38803

Contents

Safety 13

Notices and Safety 14
Conventions 15
Product Statements 15
Electrical Safety 19
General Guidelines 19
Power Cord 19
Emergency Power Off 20
Battery Safety 20
Telephone Line Cord 20
Operational Safety 21
Operational Guidelines 21
Printer Location 21
Printer Supplies 22
Consumable Information 22
Maintenance Safety 23
Environmental, Health and Safety Contact Information 24
Product Symbols 25

Getting Started 29

Parts of the Printer 30
Front View 30
Duplex Automatic Document Feeder 31
Internal Parts 33
Rear View 34
Control Panel 35
Additional Configurations and Options 37
Paper Tray Options 38
Power Options 39
Power Saver 39
Powering On the Printer or Exiting Sleep Mode 39
Restarting, Placing in Sleep Mode, or Powering Off the Printer 40
Accessing the Printer 41
Authentication 41
Authorization 42
Personalization 42
Accounting 43
Logging In 43
Apps, Features, and Functions 44
Introduction to Apps 44
Touchless Workflows 44
Adaptive Learning 44
Information Pages 46
Printing Information Pages 46

Configuration Reports....47
The Embedded Web Server....48
Finding the IP Address of Your Printer....48
Accessing the Embedded Web Server....49
Logging In Using the Embedded Web Server....49
Certificates for the Embedded Web Server....50
Downloading the Configuration Report from the Embedded Web Server....50
Using the Remote Control Panel Feature....51
Downloading the Print and Scan Drivers from the Embedded Web Server....51
Using Xerox® Workplace Cloud to Manage your Device....51
Installation and Setup....53
Installation and Setup Overview....53
Selecting a Location for the Printer....53
Updating the Printer System Software....53
Removing the Internal Packing Materials....54
Connecting the Printer....56
Selecting a Connection Method....56
Connecting to a Computer Using a USB Cable....56
Connecting to a Wired Network....57
Wireless Network Adapter....57
Connecting with Wi-Fi Direct....58
Connecting with Near Field Communication (NFC)....59
Configuring AirPrint....61
Configuring a Device for Universal Print....61
Connecting to a Telephone Line....62
Initial Printer Setup....63
Configuration Watchdog....63
Fleet Orchestrator....63
Xerox® Easy Assist Application....64
Installing the Print Driver Software....65
Operating System Requirements....65
Installing the Print Drivers for a Windows Network Printer....65
Installing the Windows Print Driver .zip File....66
Installing the Print Drivers for a Windows USB Printer....66
Installing the Printer as a Web Service on Devices....67
Installing the Drivers and Utilities for Macintosh OS (MacOS)....67
Installing Print Drivers and Utilities for UNIX and Linux Printing....69
More Information....70
Locating the Serial Number....70

Personalize....71

Personalize Overview....72
Personalization by the User....73
Personalizing the Home Screen....73
Personalizing Entry Screen Defaults....74
Personalizing the Apps....75
Personalizing the Language....78

Personalization from Adaptive Learning 79
1–Touch App Suggestions 79
Feature List Order Suggestions 80
Personalized Language Suggestions 80
Managing your Personalization Suggestions 81
1–Touch Apps 82
Creating a Private 1–Touch App 82
Creating a Private 1–Touch App from a Public 1–Touch App 83
Editing a 1–Touch App 83
Deleting or Hiding a 1–Touch App 84
Using and Editing a 1–Touch App 84
Creating Personalized Touchless Workflows 85
Removing All Personalizations 86

Xerox® Apps 87

Xerox® App Gallery 88
Xerox® App Gallery Overview 88
Creating a Xerox® App Gallery Account 88
Logging in to your Xerox® App Gallery Account 89
Installing or Updating an App from the Xerox® App Gallery 89
Device 91
Device Overview 91
Accessibility 92
About 93
Information Pages 93
Supply Status 94
Billing and Usage Counters 94
Remote Services 95
Xerox® Easy Assist (XEA) App 95
Jobs 100
Jobs Overview 100
Job Options 100
Managing Jobs 100
Managing Special Job Types 102
Managing Jobs using the Embedded Web Server 105
Copy 107
Copy Overview 107
Making a Copy 107
Copy Workflows 109
ID Card Copy 118
ID Card Copy Overview 118
Copying an ID Card 118
Email 119
Email Overview 119
Sending a Scanned Image in an Email 119
Adding or Editing Contacts in the Device Address Book from the Control Panel 122

Workflow Scanning 123
Workflow Scanning Overview 123
Using Workflow Scanning 123
Scan To 134
Scan To Overview 134
Scanning to an Email Address 134
Scanning to a USB Flash Drive 136
Scanning to the Logged-In User 137
Scanning to Remote Destinations 137
Adding a Scan To Destination to an Address Book Entry 140
Fax 142
Fax Overview 142
Sending a Fax 142
Fax Workflows 144
Server Fax 149
Server Fax Overview 149
Sending a Server Fax 149
Sending a Delayed Server Fax 151
Print From 153
Print From Overview 153
Printing From a USB Flash Drive 153
Printing from Saved Jobs 154
Printing from a Mailbox 155
@PrintByXerox 156
@PrintByXerox Overview 156
Printing with the @PrintByXerox App 156
Xerox® Connect for XMPie 157
Xerox® Connect for XMPie App Overview 157

Printing 159

Printing Overview 160
Selecting Printing Options 161
Print Driver Help 161
Windows Printing Options 161
Macintosh Printing Options 163
UNIX, Linux, and AS/400 Printing 164
Mobile Printing Options 167
Print Jobs 169
Managing Jobs 169
Printing Special Job Types 170
Printing Features 174
Selecting Paper Options for Printing 174
Printing on Both Sides of the Paper 175
Print Quality 175
Image Options 176
Printing Multiple Pages to a Single Sheet 176

Printing Booklet Layout 176
Using Special Pages 177
Printing Annotations for Windows 179
Printing Watermarks for Windows 180
Orientation 181
Advanced Printing Options 181
Using Custom Paper Sizes 184
Defining Custom Paper Sizes 184
Printing on Custom-Size Paper 185
Print From 187
Printing From a USB Flash Drive 187
Printing from Saved Jobs 188
Printing from a Mailbox 188
Printing from the Embedded Web Server 189

Paper and Media 191

Paper and Media Overview 192
Supported Paper 193
Recommended Media 193
Ordering Paper 193
General Paper Loading Guidelines 193
Paper That Can Damage Your Printer 193
Paper Storage Guidelines 194
Paper Characteristics 194
Supported Paper Types and Weights 195
Supported Standard Paper Sizes 196
Supported Paper Sizes and Weights for 2-Sided Printing 197
Supported Custom Paper Sizes 198
Configuring Paper Tray Settings 199
Configuring Dedicated Paper Trays 199
Changing Paper Size, Type, and Color 199
Loading Paper 200
Loading Paper in Trays 1–4 200
Adjusting the Paper Guides in the 550-Sheet Adjustable Trays 203
Loading Paper in the Bypass Tray 204
Printing on Special Paper 207
Letterhead, Pre–Printed, and Hole–Punched Media 207
Envelopes 209
Labels 212

Maintenance 215

General Precautions 216
Cleaning the Printer 217
Cleaning the Printer Exterior 217
Supplies 221
Consumables 221

Routine Maintenance Items 221
Ordering Supplies 221
Toner Cartridges 222
Imaging Unit 224
Duplex Automatic Document Feeder (DADF) Roller Assembly 227
Recycling Supplies 228
Resetting Supply Life Counters 229
Managing the Printer 230
Viewing the Meter Reading 230
Printing the Billing Summary Report 230
Moving the Printer 231

Troubleshooting 233

General Troubleshooting 234
Restarting the Printer 234
Printer Does Not Power On 234
Printer Resets or Powers Off Frequently 235
Printer Does Not Print 235
Printing Takes Too Long 236
Document Fails to Print 238
Document Prints from Wrong Tray 239
Empty or Partially Printed Document 239
Printer is Making Unusual Noises 239
Automatic 2-Sided Printing Problems 240
Date and Time Are Incorrect 240
Scanner Errors 240
Wireless Network Adapter Problems 241
Paper Jams 242
Locating Paper Jams 242
Minimizing Paper Jams 242
Clearing Paper Jams 243
Troubleshooting Paper Jams 251
Print, Copy, and Scan Problems 255
Identifying Print, Copy, and Scan Problems 255
Print-Quality Problems 255
Copy and Scan Problems 262
Fax Problems 264
Problems Sending Faxes 264
Problems Receiving Faxes 265
Printing Fax Reports 266
Getting Help 267
Viewing Error and Alert Messages on the Control Panel 267
Viewing the Error History on the Control Panel 267
Support Logs 267
The Embedded Web Server 268
Online Support Assistant 268
Information Pages 268

More Information 269

Specifications 271

Printer Configurations and Options 272
Standard Features 272
Options and Upgrades 273
Finishing Options 274
Physical Specifications 275
Base Configuration 275
Base Configuration with Printer Stand 275
Base Configuration with 3–Optional Standard Tray Modules 276
Configuration with Optional Trays and Printer Stand 277
Clearance Requirements 278
Base Configuration 278
Configuration with 3–Optional Standard Tray Modules 279
Configuration with Optional Trays and Printer Stand 280
Environmental Specifications 281
Temperature 281
Relative Humidity 281
Elevation 281
Electrical Specifications 282
..... 282
Performance Specifications 283
Printing Resolution 283
Print Speed 283
Environmental, Health and Safety Contact Information 284

Regulatory Information 285

Basic Regulations 286
United States FCC Regulations 286
Regulatory Information for 2.4-GHz and 5-GHz Wireless Network Adapters 286
Laser Notice 287
Canada 287
European Union and European Economic Area Compliance 288
ENERGY STAR 289
Eurasian Economic Community Certification 291
Germany 291
Turkey RoHS Regulation 292
Ukraine RoHS Compliance 292
Copy Regulations 293
United States 293
Canada 294
Other Countries 295
Fax Regulations 296
United States 296
Canada 297

European Union 298
South Africa 298
Safety Certification 299
Material Safety Data Sheets 300

Recycling and Disposal 301

All Countries 302
Battery Removal 302
North America 303
European Union 304
Disposal Outside of the European Union 304
Other Countries 305

Apps Features 307

Apps Features 308

Safety

This chapter contains:

Notices and Safety 14
Conventions 15
Electrical Safety 19
Operational Safety 21
Maintenance Safety 23
Environmental, Health and Safety Contact Information 24
Product Symbols 25

Your printer and the recommended supplies have been designed and tested to meet strict safety requirements. Attention to the following information ensures the continued safe operation of your Xerox printer.

Notices and Safety

Read the following instructions carefully before operating your printer. Refer to these instructions to ensure the continued safe operation of your printer.

Your Xerox® printer and supplies are designed and tested to meet strict safety requirements. These include safety agency evaluation and certification, and compliance with electromagnetic regulations and established environmental standards.

The safety and environment testing and performance of this product have been verified using Xerox® materials only.

Note: Unauthorized alterations, which can include the addition of new functions or connection of external devices, can affect the product certification. For more information, contact your Xerox representative.

Conventions

Note: A note identifies information that could help you.

Warning: A warning identifies something that could damage the product hardware or software.

Caution: A caution indicates a potentially hazardous situation that could injure you.

Different types of statements include:

CAUTION—POTENTIAL INJURY: Indicates a risk of injury.

CAUTION—SHOCK HAZARD: Indicates a risk of electrical shock.

CAUTION—HOT SURFACE: Indicates a risk of burn if touched.

CAUTION—TIPPING HAZARD: Indicates a crush hazard.

CAUTION—PINCH HAZARD: Indicates a risk of being caught between moving parts.

CAUTION—MOVING PARTS: Indicates a risk of laceration or abrasion injuries from rotating parts.

PRODUCT STATEMENTS

CAUTION—POTENTIAL INJURY: To avoid the risk of fire or electrical shock, connect the power cord to an appropriately rated and properly grounded electrical outlet that is near the product and easily accessible.

CAUTION—POTENTIAL INJURY: To avoid the risk of fire or electrical shock, use only the power cord provided with this product or the authorized replacement from the manufacturer.

CAUTION—POTENTIAL INJURY: Do not use this product with extension cords, multioutlet power strips, multioutlet extenders, or UPS devices. The power capacity of these types of accessories can be easily overloaded by a laser printer and may result in a risk of fire, property damage, or poor printer performance.

CAUTION—POTENTIAL INJURY: Do not use this product with an inline surge protector. The use of a surge protection device may result in a risk of fire, property damage, or poor printer performance.

CAUTION—POTENTIAL INJURY: To reduce the risk of fire, use only a 26 AWG or larger telecommunications (RJ-11) cord when connecting this product to the public switched telephone network. For users in Australia, the cord must be approved by the Australian Communications and Media Authority.

CAUTION—SHOCK HAZARD: To avoid the risk of electrical shock, do not place or use this product near water or wet locations.

CAUTION—SHOCK HAZARD: To avoid the risk of electrical shock, do not set up this product or make any electrical or cabling connections, such as the power cord, fax feature, or telephone, during a lightning storm.

CAUTION—POTENTIAL INJURY: Do not cut, twist, bind, crush, or place heavy objects on the power cord. Do not subject the power cord to abrasion or stress. Do not pinch the power cord between objects such as furniture and walls. If any of these things happen, a risk of fire or electrical shock results. Inspect the power cord regularly for signs of such problems. Remove the power cord from the electrical outlet before inspecting it.

CAUTION—SHOCK HAZARD: To avoid the risk of electrical shock, make sure that all external connections, such as Ethernet and telephone system connections, are properly installed in their marked plug-in ports.

CAUTION—SHOCK HAZARD: To avoid the risk of electrical shock, if you are accessing the controller board or installing optional hardware or memory devices sometime after setting up the printer, then turn the printer off, and unplug the power cord from the electrical outlet before continuing. If you have any other devices attached to the printer, then turn them off as well, and unplug any cables going into the printer.

CAUTION—SHOCK HAZARD: To avoid the risk of electrical shock when cleaning the exterior of the printer, unplug the power cord from the electrical outlet and disconnect all cables from the printer before proceeding.

CAUTION—SHOCK HAZARD: To avoid the risk of electrical shock, do not use the fax feature during a lightning storm.

CAUTION—POTENTIAL INJURY: If the printer weight is greater than 20 kg. (44 lb.), then it may require two or more people to lift it safely.

CAUTION—POTENTIAL INJURY: When moving the printer, follow these guidelines to avoid personal injury or printer damage:

- Make sure that all doors and trays are closed.
- Turn off the printer, and then unplug the power cord from the electrical outlet.
- Disconnect all cords and cables from the printer.
- If the printer has separate floor-standing optional trays or output options attached to it, then disconnect them before moving the printer.
- If the printer has a caster base, then carefully roll it to the new location. Use caution when passing over thresholds and breaks in flooring.
- If the printer does not have a caster base but is configured with optional trays or output options, then remove the output options and lift the printer off the trays. Do not try to lift the printer and any options at the same time.
- Always use the handholds on the printer to lift it.
- Any cart used to move the printer must have a surface able to support the full footprint of the printer.
- Any cart used to move the hardware options must have a surface able to support the dimensions of the options.
- Keep the printer in an upright position.
- Avoid severe jarring movements.
- Make sure that your fingers are not under the printer when you set it down.
- Make sure that there is adequate clearance around the printer.

CAUTION—TIPPING HAZARD: Installing one or more options on your printer or MFP may require a caster base, furniture, or other feature to prevent instability causing possible injury. For more information on supported configurations, contact the place where you purchased the printer.

CAUTION—TIPPING HAZARD: To reduce the risk of equipment instability, load each tray separately. Keep all other trays closed until needed.

CAUTION—HOT SURFACE: The inside of the printer might be hot. To reduce the risk of injury from a hot component, allow the surface to cool before touching it.

CAUTION—PINCH HAZARD: To avoid the risk of a pinch injury, use caution in areas marked with this label. Pinch injuries may occur around moving parts, such as gears, doors, trays, and covers.

CAUTION—POTENTIAL INJURY: This product uses a laser. Use of controls or adjustments or performance of procedures other than those specified in the User Guide can result in hazardous radiation exposure.

CAUTION—POTENTIAL INJURY: The lithium battery in this product is not intended to be replaced. There is a danger of explosion if a lithium battery is incorrectly replaced. Do not recharge, disassemble, or incinerate a lithium battery. Discard used lithium batteries according to the manufacturer instructions and local regulations.

This product is designed, tested, and approved to meet strict global safety standards with the use of specific manufacturer components. The safety features of some parts may not always be obvious. The manufacturer is not responsible for the use of other replacement parts.

Refer service or repairs, other than those described in the user documentation, to a service representative.

Ozone and Ventilation Information

Refer to *Facts about ozone* and *Facts about ventilation* at Health and Safety of Our Work Environment - Xerox.

SAVE THESE INSTRUCTIONS.

Electrical Safety

GENERAL GUIDELINES

Caution:

- Do not push objects into slots or openings on the printer. Touching a voltage point or shorting out a part could result in fire or electric shock.
- Do not remove the covers or guards that are fastened with screws unless you are installing optional equipment and are instructed to do so. Power off the printer when performing these installations. Disconnect the power cord when removing covers and guards for installing optional equipment. Except for user-installable options, there are no parts that you can maintain or service behind these covers.

The following are hazards to your safety:

- The power cord is damaged or frayed.
- Liquid is spilled into the printer.
- The printer is exposed to water.
- The printer emits smoke, or the surface is unusually hot.
- The printer emits unusual noise or odors.
- The printer causes a circuit breaker, fuse, or other safety device to activate.

If any of these conditions occur, do the following:

1. Power off the printer immediately.
2. Disconnect the power cord from the electrical outlet.
3. Call an authorized service representative.

POWER CORD

Use the power cord supplied with your printer.

Caution: To avoid risk of fire or electrical shock, do not use extension cords, power strips, or power plugs.

- Plug the power cord directly into a properly grounded electrical outlet. Ensure that each end of the cord is connected securely. If you do not know if an outlet is grounded, ask an electrician to check the outlet.
- Do not use a ground adapter plug to connect the printer to an electrical outlet that does not have a ground connection terminal.
- Verify that the printer is plugged into an outlet that is providing the correct voltage and power. Review the electrical specification of the printer with an electrician if necessary.
- Do not place the printer in an area where people can step on the power cord.
- Do not place objects on the power cord.
- Do not plug or unplug the power cord while the power switch is in the On position.

- If the power cord becomes frayed or worn, replace it.
- To avoid electrical shock and damage to the cord, grasp the plug when unplugging the power cord.

The power cord is attached to the printer as a plug-in device on the back of the printer. If it is necessary to disconnect all electrical power from the printer, disconnect the power cord from the electrical outlet.

EMERGENCY POWER OFF

If any of the following conditions occur, power off the printer immediately and disconnect the power cord from the electrical outlet. Contact an authorized Xerox service representative to correct the problem if:

- The equipment emits unusual odors or makes unusual noises.
- The power cable is damaged or frayed.
- A wall panel circuit breaker, fuse, or other safety device has been tripped.
- Liquid is spilled into the printer.
- The printer is exposed to water.
- Any part of the printer is damaged.

BATTERY SAFETY

One or more circuit boards in this printer contain a lithium battery. Do not attempt to repair or replace the lithium battery. If there is a problem with the battery, contact an authorized service representative to correct the problem.

Caution: If the battery on a circuit board is installed incorrectly, there is a risk of explosion.

The lithium battery in this printer contains Perchlorate Material. For information about the special handling procedures associated with Perchlorate Material, refer to https://dtsc.ca.gov/perchlorate/.

TELEPHONE LINE CORD

Caution: To reduce the risk of fire, use only No. 26 American Wire Gauge (AWG) or larger telecommunication line cord.

Operational Safety

Your printer and supplies were designed and tested to meet strict safety requirements. These include safety agency examination, approval, and compliance with established environmental standards.

Your attention to the following safety guidelines helps to ensure the continued, safe operation of your printer.

OPERATIONAL GUIDELINES

- Do not remove any trays when the printer is printing.
- Do not open the doors when the printer is printing.
- Do not move the printer when it is printing.
- Keep hands, hair, neckties, and so on, away from the exit and feed rollers.
- Covers, which require tools for removal, protect the hazard areas within the printer. Do not remove the protective covers.
- Do not override any electrical or mechanical interlock devices.
- Do not attempt to remove paper that is jammed deeply inside the printer. Switch off the printer promptly and contact your local Xerox representative.

Caution:

- The metallic surfaces in the fuser area are hot. Always use caution when removing paper jams from this area and avoid touching any metallic surfaces.
- To avoid a tip hazard, do not push or move the device with all the paper trays extended.

PRINTER LOCATION

- Place the printer on a level, solid, non-vibrating surface with adequate strength to hold its weight. To find the weight for your printer configuration, refer to *Physical Specifications* section of the User Guide.
- Do not block or cover the slots or openings on the printer. These openings are provided for ventilation and to prevent overheating of the printer.
- Place the printer in an area where there is adequate space for operation and servicing.
- When installing an office printer in a hallway or similar restricted area, additional space requirements can apply. Ensure that you comply with all workspace safety regulations, building codes, and fire codes for your area.
- Place the printer in a dust-free area.
- Do not store or operate the printer in an extremely hot, cold, or humid environment.
- Do not place the printer near a heat source.
- Do not place the printer in direct sunlight to avoid exposure to light-sensitive components.
- Do not place the printer where it is directly exposed to the cold air flow from an air conditioning system.
- Do not place the printer in locations susceptible to vibrations.

- For optimum performance, use the printer at the elevations specified in the *Environmental Specifications* section of the User Guide.

PRINTER SUPPLIES

- Use the supplies designed for your printer. The use of unsuitable materials can cause poor performance and a possible safety hazard.
- Follow all warnings and instructions marked on, or supplied with, the product, options, and supplies.
- Store all consumables in accordance with the instructions given on the package or container.
- Keep all consumables away from the reach of children.
- Never throw toner, toner cartridges, drum cartridges, or waste cartridges into an open flame.

Caution: When handling cartridges, for example toner and such, avoid skin or eye contact. Eye contact can cause irritation and inflammation. Do not attempt to disassemble the cartridge, which can increase the risk of skin or eye contact.

Warning: Use of non-Xerox supplies is not recommended. The Xerox Warranty, Service Agreement, and Total Satisfaction Guarantee do not cover damage, malfunction, or degradation of performance caused by use of non-Xerox supplies, or the use of Xerox supplies not specified for this printer. The Total Satisfaction Guarantee is available in the United States and Canada. Coverage could vary outside these areas. Please contact your Xerox representative for details.

CONSUMABLE INFORMATION

Caution: When handling cartridges such as ink/toner or fuser, avoid skin or eye contact. Eye contact can cause irritation and inflammation. Do not attempt to disassemble the cartridge. This can increase the risk of skin or eye contact.

- Store all consumables in accordance with the instructions given on the package or container.
- Keep all consumables away from the reach of children.
- Never throw dry ink/toner, print cartridges, or dry ink/toner containers into an open flame.

For information on Xerox® supplies recycling programs, go to www.xerox.com/recycling.

Maintenance Safety

Do not attempt any maintenance procedure that is not specifically described in the documentation supplied with your printer.

- Clean with a dry lint-free cloth only.
- Use supplies and cleaning materials only as directed.

> **Caution:** Do not use aerosol cleaners. Aerosol cleaners can cause explosions or fires when used on electromechanical equipment.

- Do not remove the covers or guards that are fastened with screws. Customer service items are not located behind these covers.
- In case of a Dry Ink or Toner Spill, use a broom or a wet cloth to wipe off spilled dry ink/toner. Sweep slowly to minimize generation of dust during clean up. Avoid using a vacuum. If a vacuum must be used, the unit should be designed for combustible dusts, with an explosion rated motor and non-conductive hose.

> **Caution:** The metallic surfaces in the fuser area are hot. Use caution when removing paper jams from this area and avoid touching any metallic surfaces.

- Do not burn any consumables or routine maintenance items. For information on Xerox® supplies recycling programs, go to www.xerox.com/gwa.

Environmental, Health and Safety Contact Information

For more information on Environment, Health, and Safety in relation to this Xerox product and supplies, contact:

- United States and Canada, only: 1-800-ASK-XEROX (1-800-275-9376)
- Web address: Environmental Health & Sustainability - Xerox
- Email request (world-wide): EHS-Europe@xerox.com

For product safety information in the United States and Canada, go to www.xerox.com/environment.

Product Symbols

SYMBOL	DESCRIPTION
	Caution: Indicates a hazard that can result in serious injury or death if not avoided.
	Hot Surface: Hot surface on or in the printer. To avoid personal injury, use caution.
	Warning: Moving parts. To avoid personal injury, use caution.
[No symbol]	Warning: Indicates a mandatory action to take to avoid damage to the property.
	Do not touch the part or area of the printer.
	Do not touch this part of the printer.
	Do not touch the part or area of the printer.
	Do not expose the drum cartridges to direct sunlight.
	Do not burn the item.
	Do not burn the toner cartridges.
	Do not burn the drum cartridges.

SYMBOL	DESCRIPTION
	Do not burn the toner waste cartridge.
	Pinch Hazard: To avoid personal injury, use caution in this area.
	Pinch Hazard: To avoid personal injury, use caution in this area.
	Do not remove the paper forcefully.
00:40 185°C 365°F	Hot Surface: Before handling, wait for the time indicated.
	On
	Off
	Standby
	Do not use paper attached with staples or any form of binding clip.
	Do not use folded, creased, curled, or wrinkled paper.
	Do not load or use inkjet paper.
	Do not reload paper that is used or printed previously.

SYMBOL	DESCRIPTION
	Do not use postcards.
	Do not use envelopes.
	Do not copy money.
	Add paper or media.
	Paper jam
	Lock
	Unlock
	Paper clip
	Cooling
	Elapsed time
	Supply paper
	1-Sided original document
	Hole-punched paper

SYMBOL	DESCRIPTION
	Load letterhead face up.
	Load letterhead face down.
	Load labels face down.
	USB: Universal Serial Bus
	LAN: Local Area Network
	Telephone Line
	Weight
	Services Home button
	This item can be recycled.

Getting Started

This chapter contains:

Parts of the Printer 30
Power Options 39
Accessing the Printer 41
Apps, Features, and Functions 44
Information Pages 46
The Embedded Web Server 48
Installation and Setup 53
Connecting the Printer 56
Initial Printer Setup 63
Installing the Print Driver Software 65
More Information 70

Parts of the Printer

FRONT VIEW

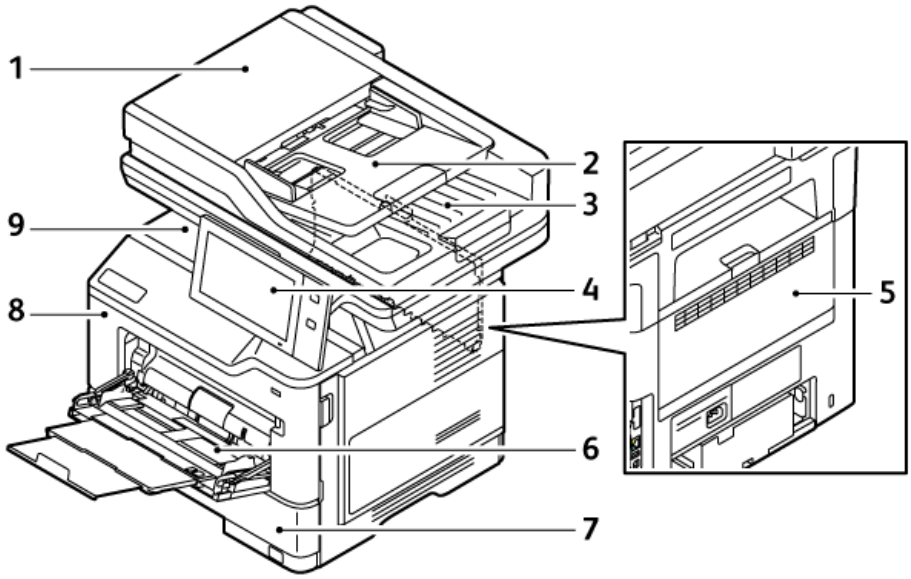

1. Document Cover/Duplex Automatic Document Feeder (DADF)
2. Document Feeder Tray
3. Document Feeder Output Tray
4. Control Panel or User Interface
5. Door B, Back Door
6. Bypass Tray
7. Tray 1, Standard 550-sheet Tray
8. Door A, Front Door
9. Center Output Tray

DUPLEX AUTOMATIC DOCUMENT FEEDER

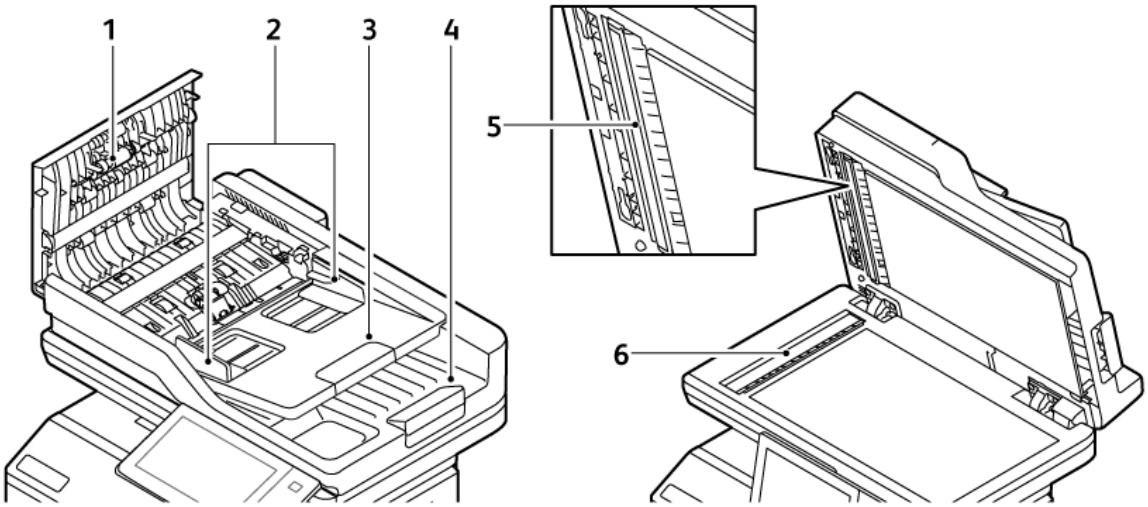

1. Top Cover
2. Document Guides
3. Document Feeder Input Tray
4. Document Feeder Output Tray
5. Second-side Scanning Lens Assembly
6. Document Glass, Constant Velocity Transport (CVT) Glass

Duplex Automatic Document Feeder Guidelines

The duplex automatic document feeder accommodates the following paper sizes and weights:

- Original document weights: 52–120 g/m^2 (14–32 lb. bond) paper
- Original standard document sizes and Custom document sizes:
  - Minimum: A6, 105 x 148 mm (4.1 x 5.8 in.)
  - Maximum: Legal, 216 x 356 mm (8.5 x 14 in.)
- Original document quantity: 100 sheets, 75 g/m^2 paper.

Note: The duplex automatic document feeder does not support Coated paper.

Follow these guidelines when you load original documents into the duplex automatic document feeder:

- Load original documents face up so that the top of the document enters the feeder first
- Place only loose sheets of undamaged paper in the duplex automatic document feeder
- Adjust the paper guides so that they fit against the original documents
- Insert paper in the duplex automatic document feeder only when ink on the paper is dry
- Do not load original documents above the MAX fill line.

Document Glass Guidelines

Lift the document feeder cover and place the first page face down in the upper-left corner of the document glass. Align the original documents to the matching paper size printed on the edge of the glass.

- The document glass accepts following paper sizes:
  - Minimum: 25.4 x 25.4 mm (1 x 1 in.)
  - Maximum: Legal, 215.9 x 355.6 mm (8.5 x 14 in.)
- Based on the Paper Size Preference setting, if the original document is A4 or shorter in size, the document glass scans either **A4** (210 x 297 mm, 8.2 x 11.7 in.) or **Letter** (215.9 x 279.4 mm, 8.5 x 11 in.).
- If the original document is longer than A4, the document glass scans according to Default Legal Size setting. The available **Legal** sizes are 215.9 x 355.6 mm (8.5 x 14 in.), 215.9 x 330.2 mm (8.5 x 13 in.), 216 x 340 mm (8.5 x 13.4 in.), and 215 x 315 mm (8.4 x 12.4 in.). The Default Legal setting is 215.9 x 355.6 mm (8.5 x 14 in.).

Note: When the original size is set to Auto in the control panel, the sizes described here are scanned on the document glass. When you select the size for an original, then that chosen size is scanned by the printer. For more information, refer to Specifying the Size of the Original.

Use the document glass rather than the duplex automatic document feeder to copy or scan the following types of original documents:

- Paper with paper clips or staples attached
- Paper with wrinkles, curls, folds, tears, or notches
- Coated or carbonless paper or items other than paper, such as cloth or metal
- Envelopes and Books

INTERNAL PARTS

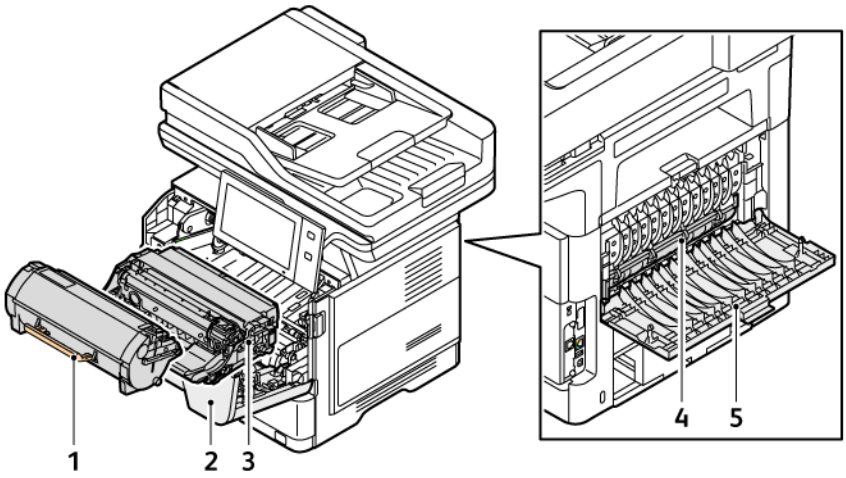

1. Toner Cartridge
2. Door A, Front Door
3. Imaging Unit
4. Fuser Assembly
5. Door B, Back Door

REAR VIEW

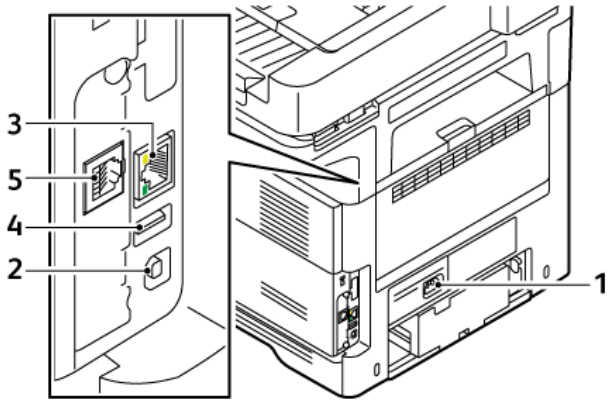

1. Main Power Outlet
2. USB Port, Type B
3. Ethernet Port
4. USB Port, Type A
5. Fax Telephone Line Port

CONTROL PANEL

The control panel consists of a touch screen and buttons that you press to control the functions that are available on the printer. The control panel has the following functions:

- Displays the current operating status of the printer.
- Provides access to print, copy, and scan features.
- Provides access to reference materials.
- Provides access to the Tools and Setup menus.
- Prompts you to load paper, replace supplies, and clear paper jams.
- Displays errors and warnings.
- Provides the Power/Wake button that is used to power on or off the printer. This button supports the power-saver modes, and the button indicator pulses to indicate the power status of the printer.

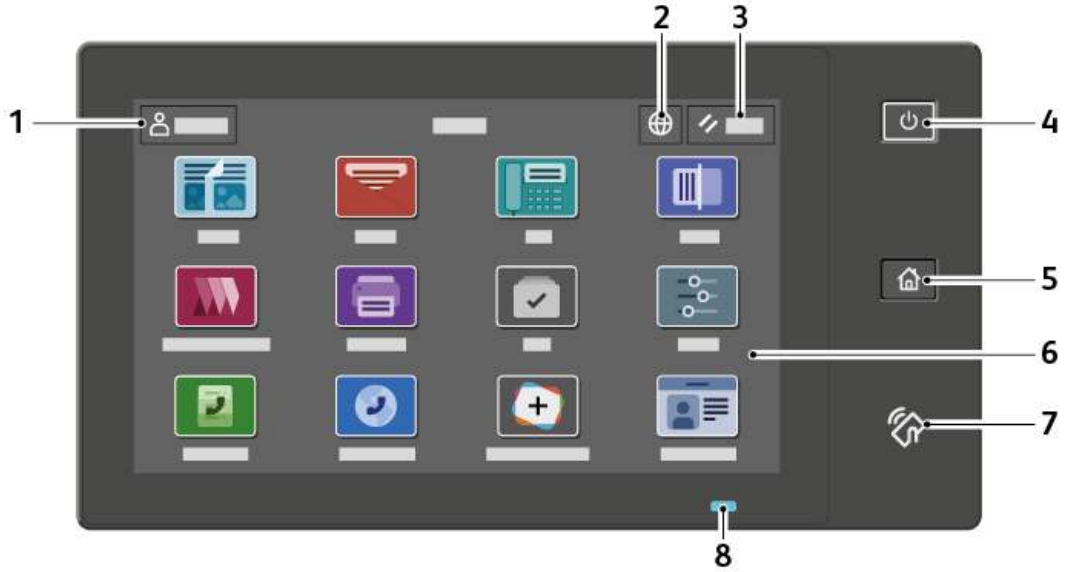

ITEM	NAME	DESCRIPTION
1	Log In Button	Touching the Log In button on the control panel touch screen allows you to log in and identify yourself to the printer. To access printer features, log in with your user credentials. If you do not know your user name or password, contact your system administrator.
2	Language Button	Touching the Language button allows you to set the language that appears on the control panel touch screen. Note: Sometimes this option is hidden from view. For details, see the *System Administrator Guide* at www.xerox.com/office/VLB415docs.
3	Reset	Use the Reset button to reset all the apps to the default settings.
4	Power/Wake Button	This button serves several power-related functions:

ITEM	NAME	DESCRIPTION
		• When the printer is powered off, pressing this button powers on the printer. • When the printer is powered on, pressing this button displays a menu on the control panel. From this menu, you can choose to enter Sleep Mode, restart the printer, or power off the printer. • When the printer is powered on, but in Sleep Mode, pressing this button wakes the printer. The button indicator pulses to indicate the power status of the printer: • When the light pulses slowly, the printer is in Sleep Mode. • When the light pulses rapidly, the printer is powering off or waking up.
5	Home Button	This button provides access to the Home menu for access to printer features, such as copy, scan, and fax.
6	Touch Screen Display	The screen displays information and provides access to printer functions and apps, such as copy, scan, and fax.
7	NFC Area	Near Field Communication (NFC) is a technology that enables devices to communicate when they are within the network range of each other. Use the NFC area to obtain a network interface, to add the printer to your mobile device, or to establish a TCP/IP connection between your device and the printer.
8	Status Indicator	This light pulses blue or amber to indicate the printer status. Blue: • Pulses blue once for access-card authentication when there is a delay in response from a remote server. Note: Some card readers are not compatible with this feature. • Pulses blue twice slowly to indicate that a job has completed. • Pulses blue rapidly while the printer is powering on, or to signal detection of an Identify Printer function from AirPrint, when applicable. Amber: Pulses amber to indicate an error condition or warning that requires your attention or the attention of your system administrator. For example, this color can indicate an out-of-toner condition, a paper jam, or that the printer is out of paper for the current job.

ADDITIONAL CONFIGURATIONS AND OPTIONS

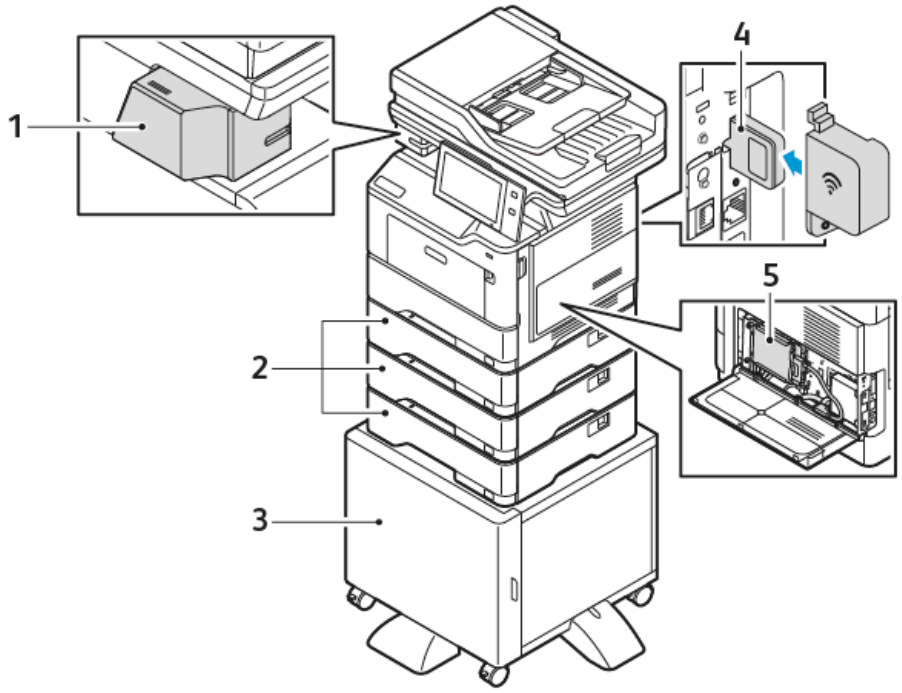

1. Convenience Stapler
2. Trays 2, 3, and 4, Optional 550-sheet Trays
3. Printer Stand
4. Wireless Network Adapter
5. Productivity Kit (500+ GB Hard Disk Drive)

PAPER TRAY OPTIONS

The printer can have up to three optional 550-sheet paper trays. The paper trays that are available with the printer are:

- Bypass Tray
- Tray 1: Standard 550-sheet Tray
- Trays 2, 3, and 4: Optional 550-sheet Trays

Configuring Dedicated Paper Trays

The system administrator can set trays to Fully Adjustable mode or Dedicated mode. When a paper tray is set to Fully Adjustable mode, you can change paper settings each time that you load the tray. When a paper tray is set to Dedicated mode, the control panel prompts you to load a specific paper size, type, and color.

Depending on the configuration, your printer can have up to three optional 550-sheet standard paper trays.

Note: To configure tray settings, refer to the *System Administrator Guide* at www.xerox.com/office/VLB415docs.

Paper Size Confirmation

The system administrator can configure the device response that appears on the control panel touch screen when paper of the same size is loaded in a tray. For standard adjustable paper trays, select an option:

- **Always Show**: This option shows the paper confirmation prompt on the control panel touch screen until the user dismisses it.
- **Delayed Confirmation**: This option shows the paper confirmation prompt for a specified time. At the end of the specified time, the prompt closes, which confirms the paper that is loaded. While the prompt appears on the control panel touch screen, you can confirm any change to the paper type, color, and size.
- **Auto Confirmation**: This option confirms the paper type, color, and size automatically without showing a confirmation prompt on the control panel touch screen.

Note: Xerox® does not recommend using the **Auto Confirmation** option unless you always load the tray with paper of the exact same type, color, and size. To configure the Automatic Tray Confirmation Prompt, refer to **Required Paper Policies** in the *System Administrator Guide* at www.xerox.com/office/VLB415docs.

Power Options

POWER SAVER

To reduce standby power consumption, you can use Sleep Timeout to set the time that the printer spends idle in Ready mode before the printer transitions to Sleep Mode.

POWERING ON THE PRINTER OR EXITING SLEEP MODE

The printer has one power switch. The power switch is the Power/Wake button on the control panel. The Power/Wake button controls power to the printer electronic components, and when powering off, it initiates a software-controlled shutdown procedure. The preferred method to power on and off the printer is to use the Power/Wake button.

- To power on the printer, on the control panel, press the **Power/Wake** button.

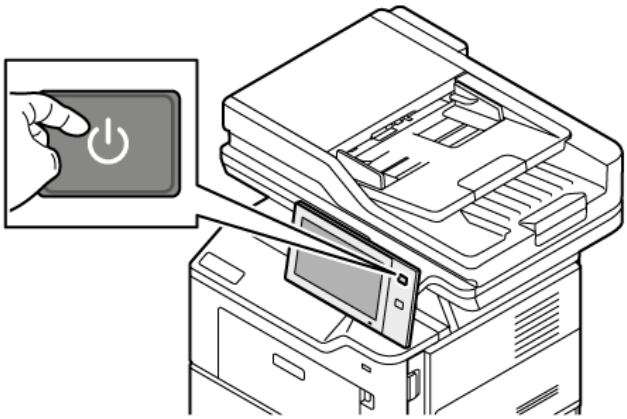

- To enter or exit Sleep mode, press the **Power/Wake** button.

Note:

- When the printer receives data from a connected device, the printer exits Sleep Mode automatically.
- When the printer receives data from a network print job, to reduce power consumption, only necessary electronic components exit Sleep mode automatically. The control panel and the document scanner do not exit Sleep Mode.
- When the printer is in Sleep Mode, the touch screen is powered off and unresponsive. To wake the printer manually, press the **Power/Wake** button.
- If Auto Power Off is enabled, the printer powers off automatically after the specified conditions are met. To enable Auto Power Off mode, contact your System Administrator. For details, refer to the *System Administrator Guide* at www.xerox.com/office/VLB415docs.

Warning: The main power outlet is at the rear side of the printer. Do not plug or unplug the power cord while the printer is powered on.

RESTARTING, PLACING IN SLEEP MODE, OR POWERING OFF THE PRINTER

To restart the printer, place the printer in Sleep Mode, or power off the printer:

1. At the printer control panel, press the **Power/Wake** button.

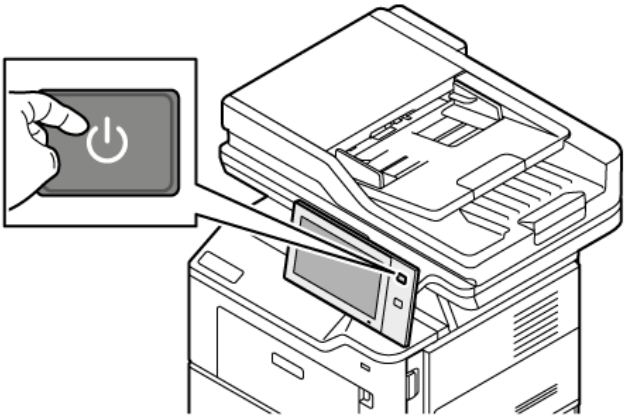

2. Select an option:
   - To restart the printer, touch **Restart**.
   - To place the printer in Sleep Mode, touch **Sleep**.

     In Sleep Mode, the touch screen goes dark and the**Power/Wake** button pulses.
   - To power off the printer, touch **Power Off**. A `Please Wait` message appears as the printer powers off.

Note: It is not recommended but if required, to power off the printer immediately, press and hold the **Power/Wake** button for 5 seconds.

3. If you want to power off the printer for an extended period, disconnect the printer from the main power outlet.

Warning: Do not unplug the power cord while the printer powers down.

Accessing the Printer

AUTHENTICATION

Authentication is the process of confirming your identity. When the system administrator enables authentication, the printer compares the information that you provide to another source of information, such as an LDAP directory. The information can be a user name and password, or the information stored on a magnetic, proximity, radio frequency identification (RFID), or smart card. If the information is valid, you are considered an authenticated user.

There are several ways to authenticate a user:

- **User Name/Password - Validate on the Device**: This option enables local authentication. Users prove their identity by typing a user name and password at the control panel or in the Embedded Web Server. The printer compares the user credentials to the information stored in the user database. If there are a limited number of users, or you do not have access to an authentication server, use this authentication method.
- **User Name/Password - Validate on the Network**: This option enables network authentication. Users prove their identity by typing a user name and password at the control panel or in the Embedded Web Server. The printer compares the user credentials to the information stored on an authentication server.
- **Convenience Authentication**: If this option is enabled, a card with a magnetic strip or RFID is used. A convenience authentication card is different from a smart card, which uses an embedded chip and typically requires a login and password. If the optional integrated RFID reader is installed, for authentication, users place a pre-programmed card over the RFID reader at the control panel.
- **Xerox Workplace Cloud**: This option enables cloud-based authentication. The printer connects directly to the Xerox® Workplace Cloud solution. This method provides multiple options for authentication. To prove their identity, users can use mobile authentication methods such as NFC or QR Codes, use an identification card, or type a user name and password.
- **Xerox Secure Access - Unified ID System**: This option enables authentication for the Xerox Secure Access Unified ID System. Users present a pre-programmed identification card to a card reader at the control panel. The printer compares the user credentials to the information stored on the Xerox® Secure Access server.
- **Identity Provider (IdP) - Validate on Cloud**: This option enables cloud-based authentication through an identity provider (IdP). The device establishes a secure connection with the IdP, then passes the user credentials to the IdP for authentication.
- **Smart Cards**: This option enables authentication for a smart card reader. Users insert a pre-programmed identification card in a card reader at the control panel.
- **Custom Authentication**: To use this authentication method, a feature installation key is required. After entering the feature installation key, the customized authentication methods provided by Xerox are available for configuration.

Note: The system administrator can allow you to type your user name and password when Convenience Authentication or Smart Cards is set as the primary authentication method. If the administrator configures an alternative authentication method, and you misplace your card, you can still access the printer.

For information about configuring Authentication settings, refer to the *System Administrator Guide* at www.xerox.com/office/VLB415docs.

AUTHORIZATION

Authorization is the function of specifying the features that users are allowed to access, and the process of approving or disapproving access. You can configure the printer to allow users to access the printer, but restrict access to certain features, tools, and apps. For example, you can allow users to access copying but restrict access to scanning. You can also control access to features at specific times of the day. For example, you can restrict a group of users from printing during peak business hours.

There are two types of authorization:

- **Local Authorization** verifies user information on the printer to approve access.
- **Network Authorization** verifies user information stored externally in a network database, such as an LDAP directory, to approve access.

For information about configuring Authorization settings, refer to the *System Administrator Guide* at www.xerox.com/office/VLB415docs.

PERSONALIZATION

Personalization is the process of customizing and configuring the device information and settings for a logged-in user. When a user logs in to the device, the device searches for the required configuration information for the user account from an LDAP directory.

Personalization allows logged-in users to create a personalized user experience at the local user interface. Personalization for logged-in users is enabled by default.

Personalization allows a logged-in user to configure the following settings:

- Personalized walk-up screen: When a user logs in, the device launches their preferred app instead of the default walk-up screen.
- Personalized home screen: A user can select their preferred apps to display in a preferred order on the home screen.
- Personalized default settings for the Copy, Email, Fax, Scan To, and ID Card Copy Apps.
- Personalized 1-Touch Apps.
- Personalized app to launch when originals are detected: At the home screen, when a logged-in user loads original documents in the automatic document feeder, the device launches their preferred app.
- Personalized auto start settings for the Copy, Email, Fax, Scan To, and 1-Touch Apps.
- Personalized Adaptive Learning suggestions: Adaptive Learning personalization offers workflow-automation suggestions to help logged-in users streamline their workflow. Personalized app workflow suggestions include:
  - Creation of personalized 1-Touch Apps for repetitive tasks
  - Creation of personalized 1-Touch Apps for complex tasks
  - Reordering of app feature settings according to frequency of use
  - Language preference settings

For a logged-in user, all personalized settings override the device defaults.

Note: The options available are defined by the administrator. For example, if the administrator has chosen to limit permissions for the use of an app, the individual user cannot override those permissions.

For more information about all the Personalization options, see Personalize.

Note: To allow the logged-in user to personalize their local user interface experience, the System Administrator is required to configure the device personalization policy. For information on configuring the device policy to enable user personalization, refer to the *System Administrator Guide* at www.xerox.com/office/VLB415docs.

ACCOUNTING

Accounting is used to track and record the numbers of Copy, Print, Scanning, Server Fax, and Fax jobs that the device produces for each user. The system administrator is required to create user accounts and enable the accounting feature. After Accounting is enabled, provide Accounting IDs at the printer to access restricted apps. If Authentication is enabled, you are required to log in first. Before you print documents from a computer, provide your account details in the print driver.

The system administrator can set limits to restrict the total number of jobs by type that a user can send to the printer. The administrator can generate reports that list usage data for individual users and groups.

For details, refer to the *System Administrator Guide* at www.xerox.com/office/VLB415docs.

LOGGING IN

Logging in is the process by which you identify yourself to the printer for authentication. If authentication is set, to access printer features, you log in with your user credentials.

Logging In at the Control Panel

Note:

- Before logging in for the first time at the Xerox device control panel, log in to the Embedded Web Server, then update your password. For details, refer to Logging In Using the Embedded Web Server.
- If you do not know your user name or password, contact your system administrator.

1. At the printer control panel, press the **Home** button.
2. Touch **Log In**.
3. For User Name, use the keypad and enter your name, then touch **Next**.
4. If prompted, enter the password, then touch **Done**.

Note: To access each app that is password-protected, repeat steps 3 and 4.

Apps, Features, and Functions

INTRODUCTION TO APPS

Xerox Apps are a gateway to the features and functions of your device. Standard Apps are installed already on the device and appear on the Home screen. Some Apps are installed as standard, but are hidden the first time you use the device.

When you log in, the Apps configured for your personal account appear on the control panel.

You can download more Apps for your device from the Xerox® App Gallery. For more information, refer to Xerox® App Gallery.

TOUCHLESS WORKFLOWS

There are two features that you can configure for the device to perform specific actions when originals are detected in the automatic document feeder:

- Default Screen When Originals Are Detected: This feature sets the default app to launch when original documents are loaded in the automatic document feeder. The setting applies when the device control panel displays the Home screen only.
- Auto Start When Originals Are Detected: This option enables the Auto Start feature. The Auto Start feature allows the device to start a job automatically within an app. For example, the device can be configured to launch the Copy app automatically when media is detected in the automatic document feeder. The Auto Start feature applies to Copy, Email, Fax, Scan To, and 1-Touch Apps. Auto Start can be enabled for individual apps, or for all supported apps.

When both the Auto Start When Originals Are Detected feature and the Default Screen When Originals Are Detected feature are enabled for an app, you can create touchless workflows. The following example describes this scenario for a 1-Touch App, based on the Copy App. If the 1-Touch App is selected as the default app when originals are detected, and Auto Start is enabled for the 1-Touch App. The control panel displays the Home screen. When a user places original documents in the automatic document feeder, the device launches the 1-Touch App automatically. The copy is initiated within 7 seconds, unless the user cancels the automatic operation.

When Personalization is enabled, a logged-in user can personalize their default app for when originals are detected. The personalized setting for the default app when originals are detected applies to a logged-in user when the control panel displays the Home screen. The preferred app opens when the user places documents in the automatic document feeder.

For more information about creating and using 1–Touch Apps, refer to Personalize.

For detailed instructions on how to configure Entry Screen Defaults and the Auto Start feature, refer to the *System Administrator Guide* at www.xerox.com/office/VLB415docs.

ADAPTIVE LEARNING

Adaptive Learning offers workflow-automation and suggestions to help users to streamline their workflows. When Adaptive Learning is enabled, the following features are provided:

- Automatically Set Device Defaults: This feature is enabled by the administrator and provides customization of default settings based on device usage by walk-up users. Options include the default walk-up screen, the default

screen when original documents are detected, and default settings for the Email and Scan To Apps. After this feature is enabled, the device gathers usage data, then changes the default settings automatically to streamline tasks.

- Suggest Personalized App Workflows: This feature provides personalized workflow suggestions for a logged-in user based on their use of certain applications. An individual user can choose the types of suggestions that they receive. Personalized suggestions apply to the Copy, Email, and Scan To Apps only.

  For more information about personalized workflow suggestions, refer to Personalize.

Note: The Adaptive Learning personalization feature is available to logged-in users only.

For detailed instructions on how to configure Adaptive Learning, refer to the *System Administrator Guide* at www.xerox.com/office/VLB415docs.

Information Pages

Your printer has a set of information pages that you can print. These pages include configuration and font information, getting started pages, and more.

The following Information Pages are available:

NAME	DESCRIPTION
Basic Configuration Report	The Basic Configuration Report provides printer information, including the serial number, installed options, network settings, port setup, tray information, and more.
Detailed Configuration Report	The Detailed Configuration Report provides information about all of the printer settings, including extensible services setup, security and authentication server configuration, connectivity settings, and more.
Billing Summary	The Billing Summary Report provides information about the device and a detailed listing of the billing meters and sheet counts.
Getting Started	The *Getting Started* guide provides an overview of the key features of the printer.
Troubleshooting Print Quality Page	The Troubleshooting Print Quality Page provides a list of common print-quality problems and tips to help solve them.
Supplies Usage Page	The Supplies Usage Page provides coverage information and part numbers for reordering supplies.
Graphics Demo Page	Print this page to check the quality of graphics.
PCL Font List	The PCL Font List provides a printout of all PCL fonts that are available on the printer.
PostScript Font List	The PostScript Font List provides a printout of all PostScript fonts that are available on the printer.

PRINTING INFORMATION PAGES

1. At the printer control panel, press the **Home** button.
2. Touch **Device > Information Pages**.
3. To print an information page, touch the needed page, then touch **Print**.

   The printer prints the selected information page.
4. To return to the Home screen, press the **Home** button.

CONFIGURATION REPORTS

There are two configuration reports available, a **Basic Configuration Report**, and a **Detailed Configuration Report**. The configuration reports provide product information, including installed options, network settings, port setup, tray information, and more.

Printing a Configuration Report

1. At the printer control panel, press the **Home** button.
2. Touch **Device > Information Pages**.
3. Touch **Basic Configuration Report** or **Detailed Configuration Report**, then touch **Print**.

   The printer prints the chosen configuration report.
4. To return to the Home screen, press the **Home** button.

The Embedded Web Server

The Embedded Web Server is the administration and configuration software that is installed in the printer. It allows System Administrators to modify network and system settings on the printer remotely using a Web browser.

You can check the status of the printer, monitor paper and supply levels, and submit and track print jobs. All these functions can be accessed from the convenience of your computer.

The Embedded Web Server requires:

- A TCP/IP connection between the printer and the network in Windows, Macintosh, UNIX, or Linux environments.
- TCP/IP and HTTP enabled in the printer.
- A network-connected computer with a Web browser that supports JavaScript.

FINDING THE IP ADDRESS OF YOUR PRINTER

You need the IP address of your printer to do the following:

- To install the print driver for a network-connected printer.
- To access the settings of your printer through the Embedded Web Server.

You can view the IP address of your printer on the control panel or on a configuration report.

Note: To view the TCP/IP address on the control panel, wait until the printer has been on for 2 minutes. If the TCP/IP address is 0.0.0.0, or begins with 169, it indicates that there is a network connectivity issue.

Viewing the IP Printer Address on the Control Panel

To view the IP address of the printer on the control panel:

1. At the printer control panel, press the **Home** button.
2. Touch **Device > About**.

   The IP address appears in the Network section of the About screen for Wired IPv4 Address or Wired IPv6 Address.
3. Record the IP address from the display.
4. To return to the Home screen, press the **Home** button.

Obtaining the Printer IP Address from a Configuration Report

To obtain the printer IP address from a configuration report:

1. At the printer control panel, press the **Home** button.
2. Touch **Device > Information Pages**.
3. Touch **Basic Configuration Report** or **Detailed Configuration Report**, then touch **Print**.

   The printer prints the chosen configuration report. The IP address appears in the Common User Data section of the configuration report.
4. To return to the Home screen, press the **Home** button.

ACCESSING THE EMBEDDED WEB SERVER

At your computer, open a Web browser. In the address field, type the IP address of the printer, then press **Enter** or **Return**.

To use the Embedded Web Server, click the page required:

- **Home**: This page provides a description of the printer and current notifications, the status of the paper trays, and supplies and billing information. There is a Quick Links area at the bottom of the page that provides direct access to key functions and pages.
- **Jobs**: The Jobs page enables you to manage active jobs on the printer, view, print, and delete saved jobs, and create and manage saved job folders.
- **Print**: This page enables you to submit print-ready files to the printer for printing. You can select options for print jobs using this page. Only print-ready files can be submitted, for example PDF, PS, PCL, and XPS file formats.
- **Scan**: The Scan page enables you to create distribution workflows and mailboxes for scanned documents.
- **Address Book**: Use the Address Book page to create a Device Address Book containing contacts for use with the fax, email, and scanning apps. You can configure the printer to use a Network Address book that looks up addresses from an LDAP directory. The printer can also be configured to use a Network Address Book, which looks up addresses from an LDAP directory. If both the Address Book and Device Address Book are configured, users are presented with a choice when they use a compatible app.
- **Properties**: You can use the Properties tab to access and configure settings for your device. System administrator login credentials are required to change most settings.
- **Support**: This page provides access to general support information and telephone numbers. You can use the Support page to access the Remote Control Panel and send diagnostic information to Xerox.

The Embedded Web Server has a Help option that provides information about all available device features and functions. To access Help, click the **Help** link displayed at the bottom of each page. Navigate to the topic required, or use the **Search** function to find specific information.

For detailed instructions on how to use the Embedded Web Server to configure printer settings, refer to the *System Administrator Guide* at www.xerox.com/office/VLB415docs.

LOGGING IN USING THE EMBEDDED WEB SERVER

To access certain features, tools, and apps, log in to the Embedded Web Server for your device.

Note: Access to some restricted functions requires administrator rights. For more information, refer to the *System Administrator Guide* at www.xerox.com/office/VLB415docs.

To log in to the Embedded Web Server:

1. At your computer, open a Web browser. In the address field, type the IP address of the printer, then press **Enter** or **Return**.
2. In the top right area of the page, click **Login**.
3. Enter your User ID and password, then click **Login**.
4. If you are logging in for the first time, set up a password.
   a. Type the old password.

b. Type a new password. To verify the password, retype it.

Note: The new password must adhere to all minimum password requirements. For details, contact your system administrator, or refer to the *System Administrator Guide* at www.xerox.com/office/VLB415docs.

c. Click **Save**. The new password is stored.

CERTIFICATES FOR THE EMBEDDED WEB SERVER

Your device includes an HTTPS certificate. The device generates the certificate automatically during device installation. The HTTPS certificate is used to encrypt communications between your computer and the Xerox device.

Note:

- The Embedded Web Server page for your Xerox device can display an error message that the security certificate is not trusted. This configuration does not lessen the security of the communications between your computer and the Xerox device.
- To eliminate the connection warning in your Web browser, you can replace the certificate with a signed certificate from a Certificate Authority. For information on obtaining a certificate from a Certificate Authority, contact your Internet Service Provider.
- To eliminate the connection warning in your Web browser, you can download the Xerox Root CA certificate from the device Embedded Web Server, then install the certificate on your client.

For information on obtaining, installing, and enabling certificates, refer to the *System Administrator Guide* at www.xerox.com/office/VLB415docs.

DOWNLOADING THE CONFIGURATION REPORT FROM THE EMBEDDED WEB SERVER

From the Embedded Web Server, you can download and save a copy of the Configuration Report to your computer hard drive. Use configuration reports from multiple devices to compare software versions, configurations, and compliance information.

To download a copy of the Configuration Report from the Embedded Web Server:

1. At your computer, open a Web browser. In the address field, type the IP address of the printer, then press **Enter** or **Return**.

   Note: For details about obtaining the IP address of your printer, refer to Finding the IP Address of Your Printer.

2. To download the Configuration Report, scroll to the bottom of the page. In the Quick Links section, click **Download Configuration Page**.

   Note: If the **Download Configuration Page** option does not appear, log in as a system administrator.

   The document is saved automatically as an XML file in the default download location on your computer hard drive. To open the Configuration Report, use an XML viewer.

USING THE REMOTE CONTROL PANEL FEATURE

The Remote Control Panel feature in the Embedded Web Server allows you to access the printer control panel remotely from a Web browser.

Note: To access the Remote Control Panel, first enable the feature. For details, contact your system administrator or refer to the *System Administrator Guide* at www.xerox.com/office/VLB415docs.

To access the Remote Control Panel feature:

1. At your computer, open a Web browser. In the address field, type the IP address of the printer, then press **Enter** or **Return**.

   Note: For details about obtaining the IP address of your printer, refer to Finding the IP Address of Your Printer.

2. In the Quick Links area, click **Remote Control Panel**.

   Note: If the Remote Control Panel option is not displayed or fails to load, contact your system administrator.

3. To restrict other users from accessing the device control panel when you are connected remotely to the device, click **Block device control panel (local user can only observe)**.

   Note: If a local user attempts to access the control panel while the device control panel is locked, the control panel does not respond. A message appears on the control panel, confirming that the control panel is locked and the device is being controlled remotely.

4. To enable remote access to the device control panel, click **Start Remote Session**. The remote control panel sends a request to the local control panel.
   - If the local control panel is inactive, the remote control panel session is activated automatically.
   - If a local user is active on the device, a `Remote Session Request` message appears on the local control panel. The local user chooses to accept or deny the request. If the request is accepted, the remote control panel session is activated. If the request is denied, a `Request Denied` message appears in the Embedded Web Server.

   Note: If the system administrator requests a remote session, if the request is denied, an option to override the local session is displayed.

DOWNLOADING THE PRINT AND SCAN DRIVERS FROM THE EMBEDDED WEB SERVER

You can download the Print and Scan Drivers for your device from the Embedded Web Server.

1. In your computer Web browser, open the Embedded Web Server by typing the IP address of the printer.
2. Click **Support > General**.
3. To download the Print and Scan Drivers, at Assistance Links, click **Install Print/Scan Drivers**.

   The Smart Start installer file is downloaded to your computer.

USING XEROX® WORKPLACE CLOUD TO MANAGE YOUR DEVICE

Xerox® Workplace Cloud is a cloud-based print solution that can remotely manage many aspects of your device. Xerox® Workplace Cloud provides authentication, print management, cost control, and mobility workflows.

Features such as Pull Printing allow you to submit your jobs to a secure single queue from any computer or mobile device. After you have authenticated with the networked device of your choice, you can view, modify, print, or delete your job as needed.

Flexible authentication options enable you to release your pull print jobs securely, and access your printer apps. Single Sign-on (SSO) authentication is provided allowing you to access all of your SSO-enabled apps without having to perform any additional login steps.

Xerox® Workplace Cloud is easy to set up and use, and because it is hosted in the cloud, Xerox manage all updates and patches.

For more information about enabling Xerox® Workplace Cloud for your device, contact your system administrator or refer to the *System Administrator Guide* at www.xerox.com/office/VLB415docs.

Installation and Setup

For reference:

- *Installation Guide* packaged with your printer
- Online Support Assistant at www.xerox.com/office/VLB415docs

INSTALLATION AND SETUP OVERVIEW

Before you print, ensure that your computer and the printer are plugged in, powered on, and connected. Configure the initial settings of the printer, then install the print driver software and utilities on your computer.

You can connect to your printer directly from your computer using USB, or connect to a network using an Ethernet cable or wireless connection. Hardware and cabling requirements vary for the different connection methods. Routers, network hubs and switches, modems, Ethernet cables, and USB cables are not included with your printer and must be purchased separately. Xerox recommends an Ethernet connection because it is typically faster than a USB connection, and it provides access to the Embedded Web Server.

For more information, refer to the *System Administrator Guide* at www.xerox.com/office/VLB415docs.

SELECTING A LOCATION FOR THE PRINTER

Caution: To avoid personal injury and damage to the printer, professional installation of the printer is required.

1. Select a dust-free area with temperatures from 10°–32° C (50°–90° F), and relative humidity of 15–85 percent.

   Note: Sudden temperature fluctuations can affect print quality. Rapid heating of a cold room can cause condensation inside the printer, which directly interferes with image transfer.

2. Place the printer on a level, solid, non-vibrating surface with adequate strength to hold the weight of the printer. Ensure that the printer is horizontal and that all four feet are in solid contact with the surface.
   To find the weight for your printer configuration, refer to Physical Specifications.
3. Select a location with adequate clearance to access supplies and to provide proper ventilation.
   To find the clearance requirements for your printer, refer to Clearance Requirements.
4. After you position the printer, you are ready to connect it to the power source and computer or network.

UPDATING THE PRINTER SYSTEM SOFTWARE

Before installing print driver, verify that the printer has the latest version of system software loaded. When Xerox releases a new version of printer system software or firmware, you can update your device. To ensure a successful software update, follow the steps provided with the software files. Printer system software is downloaded from www.xerox.com/office/VLB415support.

Before you download and install new software, determine the current software version installed on your device. Print a configuration report to compare the system software version with the version available for download. For

instructions about printing a configuration report, refer to Printing a Configuration Report.

Follow the instructions provided with the software to download the files and upgrade your device. You can configure the device to connect routinely to an FTP directory on your network to update device software automatically. You can also update the device software manually. For more information about updating system operating software, refer to the *System Administrator Guide* at www.xerox.com/office/VLB415docs.

REMOVING THE INTERNAL PACKING MATERIALS

The printer comes with internal packing materials. Remove the packing materials and install the imaging unit and the toner cartridge, correctly.

1. At the front of the printer, open Door A.
2. To remove toner cartridge, pull the handle.

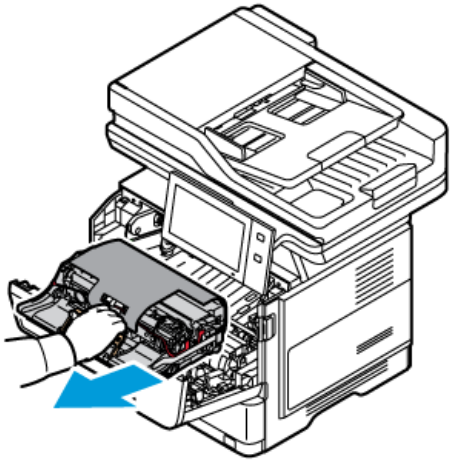

3. Remove the imaging unit.
4. Remove the packing materials, such as plastic clips, tape, and foam.

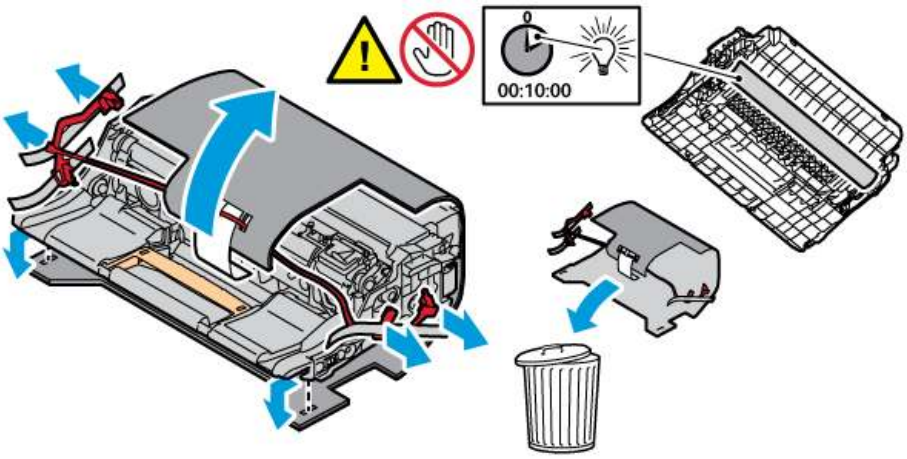

5. Insert the imaging unit, then the toner cartridge, back into the printer.

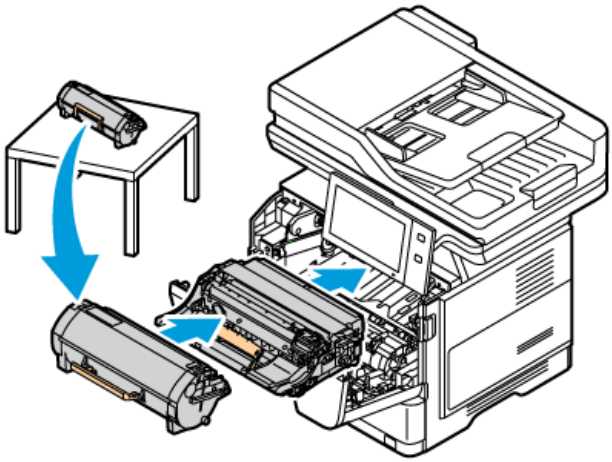

6. Close Door A.

Restart the printer after removing the packing materials. For more information, refer to the *Installation Guide* of the printer.

Connecting the Printer

SELECTING A CONNECTION METHOD

You can connect the printer to your computer using a USB cable, Ethernet cable, or wireless connection. The method that you select depends on how your computer is connected to the network. A USB connection is a direct connection and is the easiest to set up. An Ethernet connection is used to connect to a network. If you are using a network connection, it is important to understand how your computer is connected to the network.

Note: Hardware and cabling requirements vary for the different connection methods. Routers, network hubs, network switches, modems, Ethernet cables, and USB cables are not included with your printer and require a separate purchase.

USB

If you connect the printer to one computer and do not have a network, use a USB connection. A USB connection offers fast data speeds, but typically is not as fast as a network connection.

Network

If your computer is connected to an office network or home network, use an Ethernet cable to connect the printer to the network. You cannot connect the printer directly to the computer. A connection through a router or network switch is required. An Ethernet network can be used for one or more computers and supports many printers and systems simultaneously. An Ethernet connection is typically faster than USB and allows you direct access to the settings of the printer using the Embedded Web Server.

Note: To access the Embedded Web Server, a network connection is required.

Wireless Network

If your environment includes a wireless router or wireless access point, you can connect the printer to the network with a wireless connection. A wireless network connection provides the same access and services as a wired connection. A wireless network connection is typically faster than USB and allows direct access to the settings of the printer using the Embedded Web Server.

Note: For your printer, to connect to a Wireless Network, a Wireless Network Adapter is required.

CONNECTING TO A COMPUTER USING A USB CABLE

To connect the printer to a computer using a USB cable, you need one of these operating systems:

- Windows 10, Windows 11, Windows Server 2012, Windows Server 2016, Windows Server 2019, and Windows Server 2022.
- Macintosh OS version 10.15 and later.
- UNIX and Linux: Your printer supports connection to various UNIX platforms through the network interface.

To connect the printer to a computer using a USB cable:

1. Connect the B end of a standard A/B USB 2.0 or USB 3.0 cable to the USB Port on the back of the printer.
2. Connect the A end of the USB cable to the USB port on the computer.
3. If the Windows Found New Hardware Wizard appears, click **cancel**.

4. Install the print driver.

For more information, refer to Installing the Print Driver Software.

CONNECTING TO A WIRED NETWORK

Use a Category 5 or better Ethernet cable to connect the printer to the network. An Ethernet network is used for one or more computers and supports many printers and systems simultaneously. An Ethernet connection provides direct access to printer settings using the Embedded Web Server.

To connect the printer:

1. Connect the power cord to the printer, then plug the cord into an electrical outlet.
2. Connect one end of a Category 5 or better Ethernet cable to the Ethernet port on the back of the printer. Connect the other end of the cable to a correctly-configured network port.
3. Power on the printer.

For details on configuring connection settings, refer to the *System Administrator Guide* at www.xerox.com/office/VLB415docs.

WIRELESS NETWORK ADAPTER

The Xerox® Wireless Network Adapter enables you to use the Wireless Wizard to connect to a wireless network. The compatibility of the Wireless Network Adapter is dependent on the device model and software version.

The Xerox® Wireless Network Adapter supports the following:

- Wi-Fi Bands: Dual Band 2.4 GHz and 5 GHz
- Network Standards:
  - 802.11ac
  - 802.11n
  - 802.11b/a/g
- Wi-Fi Direct

For more information on the Wireless Network Adapter, refer to the *System Administrator Guide* at www.xerox.com/office/VLB415docs.

Connecting to a Wireless Network

If you have purchased the Xerox® Wireless Network Adapter, you can use the Wireless Wizard to connect the device to a wireless network. If the device is connected to a wired network, you can configure wireless settings using the Embedded Web Server or at the control panel touch screen using the Wireless Install Wizard.

Note:

- Not all Xerox® Wireless Network Adapters are compatible with all Xerox® printers. Ensure that you purchase the correct Xerox® Wireless Network Adapter kit for your device. For more information, contact your Xerox representative.
- For more information about installing the wireless network adapter, refer to the Xerox® Wireless Network Adapter Kit *Hardware Install and Setup* instructions that are included with the kit.
- The device uses either the wireless or the wired network connection. Activating one network connection deactivates the other network connection.
- When you switch from a wired connection to a wireless connection, the IP address of the printer changes. For more information on IP address or host name, refer to *System Administrator Guide*.

For details on configuring wireless network settings, refer to the *System Administrator Guide* at www.xerox.com/office/VLB415docs.

CONNECTING WITH WI-FI DIRECT

You can connect to your printer from any Wi-Fi-enabled mobile device, such as a tablet, computer, or smart phone, using Wi-Fi Direct or Soft AP features. The Wi-Fi Direct feature is disabled by default on the Xerox device.

Note: The Wi-Fi Direct feature is available only on printers with the optional Wireless Network Adapter installed. After you install the Wireless Network Adapter, the Wi-Fi Direct feature is enabled by default.

Wi-Fi Direct Overview

The Wi-Fi Direct feature allows you to print from a mobile device to your printer, using one of the following methods.

- WPS push button, for Wi-Fi Direct-enabled Android devices with the Mopria print plug-in installed.
- Soft Access Point (AP), for Apple iPhones and other mobile devices that do not support the Wi-Fi Direct function.

For information about using the Wi-Fi Direct feature on your mobile device, or connecting to the printer using the Soft AP feature, refer the mobile device documentation from the manufacturer.

For information about configuring the Wi-Fi Direct feature on your printer, refer to the *System Administrator Guide* at www.xerox.com/office/VLB415docs.

Using Wi-Fi Direct on Your Mobile Device

The Wi-Fi Direct WPS Push Button feature requires the Mopria Print Service App installed on your mobile device. The printer does not require a wireless connection.

Installing Mopria Print Service

1. On your mobile device, go to the Google Play Store, then search for **Mopria Print Service**.
2. Install the **Mopria Print Service** App.
3. Go to **Settings**, then touch **Printing**.
4. Go to the notification area, then touch **Mopria Print Service**.

5. To enable Mopria Print Service, touch **On**.
6. Exit **Settings**.

Your mobile device searches for Wi-Fi Direct-enabled printers that are in range of the mobile device.

Using Wi-Fi Direct on your Printer

Wi-Fi Direct is a direct wireless connection from your mobile device to the printer. The Wi-Fi Direct feature is enabled by default when the Wi-Fi hardware is installed.

Using the Wi-Fi Direct feature does not require a wireless network connection to a printer. Contact your System Administrator to connect your printer to a wired or wireless network.

Printing Using Wi-Fi Direct

To print a document from a Wi-Fi-enabled mobile device:

1. On the mobile device, open the document that you want to print.
2. In the device application, select the **Print** button.
3. If there is more than one printer in the area with Wi-Fi Direct enabled, select the required printer from the list.
4. Select the print settings required for the job.
5. Submit the job for printing.

   A message appears on the mobile device.
6. Select **Connect**.

   When the connection is made, a message appears on the printer.
7. At the printer control panel, touch **OK**.

   The job prints.

CONNECTING WITH NEAR FIELD COMMUNICATION (NFC)

NFC Overview

Near field communication (NFC) is a technology that enables devices to communicate when they are in close range. NFC allows you to add a printer to your Android mobile device easily. After you add the printer, there is no need to use NFC on that printer. The NFC feature requires installation of the Xerox Print Service app on the mobile device.

Printers can communicate using NFC when they are within your mobile device range.

Note: The range can vary depending on the device manufacturer. For information about the required settings for individual mobile devices, refer the documentation supplied by the manufacturer of your mobile device.

For details about configuring NFC on your printer, refer to the *System Administrator Guide* at www.xerox.com/office/VLB415docs.

Using NFC on your Mobile Device

The NFC feature requires installation of the Xerox Print Service app on the mobile device.

Your mobile device must use the same Wi-Fi network environment as the printer. The printer does not need to have a wireless connection.

Note: NFC supports Android 4.4 or greater devices.

Installing the Xerox Print Service Plugin

1. On your mobile device, go to the Google Play Store, then search for **Xerox Print Service Plugin**.
2. Install the **Xerox Print Service Plugin** app.
3. Go to **Settings**, then touch **Printing**.
4. Go to the notification pull-down bar, then touch **Xerox Print Service**.
5. To enable **Xerox Print Service**, touch **On**.
6. Exit **Settings**.

Enabling NFC on the Mobile Device

Most mobile devices have NFC disabled by default.

To enable NFC:

1. Go to **Settings**.
2. Go to the NFC setting, then touch **On.**
3. Exit **Settings**.

Using NFC on your Printer

The NFC chip is on the bottom right of the control panel. When NFC is enabled, you can use the NFC function.

Refer to your mobile device user documentation for the mobile device NFC chip location.

Note: The NFC function must be enabled before use. For NFC enable instructions, refer to the *System Administrator Guide* at www.xerox.com/office/VLB415docs.

Mapping the Printer to your Mobile Device

1. Open the **Xerox Print Service Plugin**.

2. At the top right side of the screen, touch the selection button, then select **Add Printer**.
3. Touch the **NFC** option.
4. Hold the mobile device over the NFC icon on the control panel.

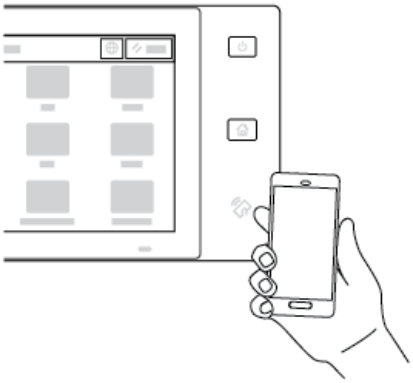

The mobile device and the printer communicate with each other. The mobile device searches the network for the printer. When the printer is located, it is added to the list as a mapped printer.

You can submit print jobs from your mobile device to the printer.

Printing using Xerox® Print Services

1. Open the document that you want to print. For example, a PDF or Word document.
2. At the top of the screen, select the **Print** button.
3. If there is more than one printer mapped for use with NFC, select the printer required.
4. Select the print settings required for the job.
5. Submit the job for printing.

CONFIGURING AIRPRINT

AirPrint is a software feature that allows you to print documents from Apple iOS-based mobile devices and MacOS-based devices without a print driver. AirPrint-enabled printers that use a wired or wireless connection allow you to print or fax directly from a Mac, an iPhone, iPad, or iPod Touch. Additionally, you can use AirPrint to scan from a wired or wireless printer to supported Apple devices.

For information about AirPrint configuration settings, refer to the *System Administrator Guide* at www.xerox.com/office/VLB415docs. Alternatively, use a desktop computer to access the Embedded Web Server for your device, then click the Help link that appears at the bottom of each page. For details, refer to Accessing the Embedded Web Server.

CONFIGURING A DEVICE FOR UNIVERSAL PRINT

Universal Print is a cloud-based print protocol that provides a simple and secure print solution for Microsoft® 365 users. Universal Print allows administrators to manage printers without the need for on-premises print servers. Universal Print enables users to access cloud printers without the need for print drivers.

- When Universal Print is enabled, the configuration settings appear. The Universal Print area displays the registration status of your device.
- When Universal Print is disabled, the configuration settings are hidden. The Universal Print area shows the status `Off`. This status is the default.

For information about configuring a device for Universal Print, refer to the *System Administrator Guide* at www.xerox.com/office/VLB415docs.

CONNECTING TO A TELEPHONE LINE

A standard one-line fax is available with your printer.

> **Caution:** To reduce the risk of fire, use only No. 26 American Wire Gauge (AWG) or larger telecommunication line cord.

1. Ensure that the printer is powered off.
2. Connect a standard RJ11 cable, No. 26 American Wire Gauge (AWG) or larger to the Line port on the back of the printer.
3. Connect the other end of the RJ11 cable to an operating telephone line.
4. Power on the printer.
5. Enable and configure the Fax functions.

Initial Printer Setup

Before installing the printer software, verify that the printer is set up correctly. Setup includes enabling the optional features and assigning an IP address for the Ethernet network connection. Printer settings can be configured at the printer control panel or by using the Embedded Web Server. To configure settings at the printer control panel, the Installation wizard starts the first time that you power on the printer. The wizard prompts you with a series of questions to help configure basic printer settings.

The System Administrator can configure the following settings:

- Language
- Backup & Restore Settings
- Network Connection
- Proxy Server Setup
- Date and Time
- Measurements
- LDAP Settings
- Apps Setup
- Security Settings

For more information on configuring the printer settings at the control panel or using the Embedded Web Server, refer to the *System Administrator Guide* at www.xerox.com/office/VLB415docs.

CONFIGURATION WATCHDOG

Configuration Watchdog is a security feature that monitors feature settings to ensure that the device stays in the appropriate configuration throughout day-to-day operations. The feature ensures that values remain compliant without external device monitoring. When a watched setting changes, Configuration Watchdog detects the change on the next manual or scheduled check. After a change is detected, Configuration Watchdog remediates the feature to the required settings.

After remediation occurs, administrators can view the list of remediated items on the Configuration Watchdog page.

For more information about Configuration Watchdog, contact your system administrator, or refer to the *System Administrator Guide* at www.xerox.com/office/VLB415docs.

FLEET ORCHESTRATOR

The Fleet Orchestrator feature allows you to configure many devices in similar ways, automatically. After you configure one device, you can distribute any of the configuration settings to other devices, as needed. You can set up schedules to share configuration settings regularly and automatically.

The Fleet Orchestrator feature enables you to share the following types of configuration files:

- Clone files
- Software upgrade files

- 1-Touch Add-On files

For more information about Fleet Orchestrator, contact your system administrator, or refer to the *System Administrator Guide* at www.xerox.com/office/VLB415docs.

XEROX® EASY ASSIST APPLICATION

Xerox Easy Assist application can assist you with the initial setup procedure for a new printer. You can access and configure the printer from your smartphone through the Xerox Easy Assist (XEA) app. To access the printer from your smartphone, download and install the Xerox Easy Assist app on your mobile device. By installing the Xerox Easy Assist app on your smartphone, you can setup your new printer easily, manage its configuration, view alerts indicating supply requirements and order them, and get live troubleshooting support for your printer.

The Xerox Easy Assist App has instructions and video links that help you to unpack the printer from its shipping box. To install the Xerox Easy Assist app on your smartphone, you need to scan a QR Code. You can find this QR Code on the packaging box or the *Installation Guide* that comes with the printer. To install the Xerox Easy Assist app for the first time, scan the QR Code with your smartphone camera.

For more information, refer to Xerox® Easy Assist (XEA) App.

Installing the Print Driver Software

Before you install the print driver software, verify that the printer is plugged in, powered on, connected correctly, and has a valid IP address. The IP address usually appears on the default Home screen of the control panel. If you cannot find the IP address of your printer, refer to Finding the IP Address of Your Printer.

Note: If the *Software and Documentation* disc is not available, download the latest drivers from www.xerox.com/office/VLB415drivers.

After you install the print driver software, you can configure printing preferences and default settings for the print driver. For more information, refer to Printing.

Printing settings for the device, such as Page Description Language options, are configured using the Embedded Web Server. To configure printing settings, contact your System Administrator or refer to the *System Administrator Guide* at www.xerox.com/office/VLB415docs.

OPERATING SYSTEM REQUIREMENTS

- Windows 10, Windows 11, Windows Server 2012, Windows Server 2016, Windows Server 2019, and Windows Server 2022.
- Macintosh OS version 10.15 and later.
- UNIX and Linux: Your printer supports connection to various UNIX platforms through the network interface.

INSTALLING THE PRINT DRIVERS FOR A WINDOWS NETWORK PRINTER

1. Insert the *Software and Documentation disc* into the appropriate drive on your computer. If the installer does not start automatically, navigate to the drive, then double-click the **Setup.exe** installer file.

   Note: If you do not have the *Software and Documentation disc*, download the Smart Start installer file from www.xerox.com or the Embedded Web Server of your printer. For more information, refer to Downloading the Print and Scan Drivers from the Embedded Web Server.

2. Click **Xerox Smart Start — Driver Installer (Recommended)**.
3. At the License Agreement, click **Agree**.
4. From the list of discovered printers, select your printer.

   Note: When you install print drivers for a network printer, if your printer does not appear in the list, click **Don't See Your Printer?**and then enter the IP address for your printer. To install the recommended print driver, click **Continue**, then select **Install**.

5. Click **Quick Install**.

   A message appears that confirms that the installation is successful.

6. To complete the installation and close the Installer window, click **Done**.

INSTALLING THE WINDOWS PRINT DRIVER .ZIP FILE

You can download print drivers from Xerox.com in a .zip file, then use the Windows Add Printer Wizard to install the print drivers on your computer.

To install the print driver from the .zip file:

1. Download, then extract the required .zip file to a local directory on your computer.
2. At your computer, open the **Control Panel**, then select **Devices and Printers > Add a Printer**.
3. Click **The printer that I want isn't listed**, then click **Add a local printer or network printer with manual settings**.
4. To use a previously established port, select **Use an existing port**, then from the list, select a Standard TCP/IP Port.
5. To create a Standard TCP/IP port:
   a. Select **Create a New Port**.
   b. For Type of port, select **Standard TCP/IP Port**, then click **Next**.
   c. In the Hostname or IP address field, type the printer IP address or host name.
   d. To disable the feature, clear the check box for **Query the printer and automatically select the driver to use**, then click **Next**.
6. Click **Have Disk**.
7. Click **Browse**. Browse to the extracted files in the local directory, then select the driver.inf file for your printer. Click **Open**.
8. Select your printer model, then click **Next**.
9. If a prompt appears because the print driver was installed previously, click **Use the driver that is currently installed (recommended)**.
10. In the Printer name field, type a name for your printer.
11. To install the print driver, click **Next**.
12. If needed, set the printer as the default printer.

    Note: Before you select **Share Printer**, contact your system administrator.

13. To send a test page to the printer, click **Print a test page**.
14. Click **Finish**.

INSTALLING THE PRINT DRIVERS FOR A WINDOWS USB PRINTER

1. Connect the B end of a standard A/B USB 2.0 or USB 3.0 cable to the USB Port on the back of the printer.
2. Connect the A end of the USB cable to the USB port on the computer.
3. If the Windows Found New Hardware Wizard appears, click **cancel**.

4. Insert the *Software and Documentation disc* into the appropriate drive on your computer. If the installer does not start automatically, navigate to the drive, then double-click the **Setup.exe** installer file.

   Note: If you do not have the *Software and Documentation disc*, download the Smart Start installer file from www.xerox.com or the Embedded Web Server of your printer. For more information, refer to Downloading the Print and Scan Drivers from the Embedded Web Server.

5. Click **Xerox Smart Start — Driver Installer (Recommended)**.
6. At the License Agreement, click **Agree**.
7. From the list of discovered printers, select your printer, then click **Quick Install**.

   A message appears that confirms that the installation is successful.

8. To complete the installation and close the Installer window, click **Done**.

INSTALLING THE PRINTER AS A WEB SERVICE ON DEVICES

Web Services on Devices (WSD) allows a client to discover and access a remote device and its associated services across a network. WSD supports device discovery, control, and use.

Installing a WSD Printer Using the Add Device Wizard

1. At your computer, click **Start**, then select **Printers and Scanners**.
2. To add the required printer, click **Add a Printer or Scanner**.
3. In the list of available devices, select the device that you want to use, then click **Next**.

   Note: If the printer that you want to use does not appear in the list, click **Cancel**. To add the printer manually, use the IP address of the printer. For details, refer to Installing the Windows Print Driver .zip File.

4. Click **Close**.

INSTALLING THE DRIVERS AND UTILITIES FOR MACINTOSH OS (MACOS)

1. Download the latest print driver from www.xerox.com/office/VLB415support.
2. Open the Xerox® Print Drivers 5.xx.x.dmg or .pkg as needed for your printer.
3. To run Xerox® Print Drivers 5.xx.x.dmg or .pkg, double-click the appropriate file name.
4. When prompted, click **Continue**.
5. To accept the license agreement, click **I Agree**.
6. To accept the current installation location, click **Install**, or select another location for the installation files, then click **Install**.
7. If prompted, enter your password, then click **OK**.
8. From the list of discovered printers, select your printer, then click **Next**.
9. If your printer does not appear in the list of discovered printers:
   a. Click the **Network Printer Icon**.
   b. Type the IP address of your printer, then click **Continue**.

c. Select your printer in the list of discovered printers, then click **Continue**.

10. If your printer was not detected, verify that the printer is powered on and that the Ethernet or USB cable is connected properly.
11. To accept the print queue message, click **OK**.
12. Select or clear the **Set Printer as Default** and **Print a Test Page** check boxes.
13. Click **Continue**, then click **Close**.

Adding the Printer for MacOS

For networking, set up your printer using Bonjour® (mDNS), or for an LPD, LPR connection, connect using the IP address of your printer. For a non-network printer, create a desktop USB connection.

For more information, go to the Online Support Assistant at: www.xerox.com/office/VLB415support.

Adding the Printer Using Bonjour

To add the printer using Bonjour®:

1. From the computer Applications folder or from the dock, open **System Preferences**.
2. Click **Printers & Scanners**.

   The list of printers appears on the left of the window.
3. For the list of printers, click the Plus icon (**+**).
4. At the top of the window, click the **Default** icon.
5. Select your printer from the list, then click **Add**.

Note: If your printer is not detected, verify that the printer is powered on and that the Ethernet cable is connected properly.

Adding the Printer by Specifying the IP Address

To add the printer by specifying the IP address:

1. From the computer Applications folder or from the dock, open **System Preferences**.
2. Click **Printers & Scanners**.

   The list of printers appears on the left of the window.
3. In the list of printers, click the Plus (**+**) icon.
4. Click **IP**.
5. From the Protocol list, select the protocol.
6. In the Address field, enter the IP address of the printer.
7. In the Name field, enter a name for the printer.
8. From the Use list, choose **Select a driver to use**.
9. From the printer software list, select the print driver for your printer model.
10. Click **Add**.

INSTALLING PRINT DRIVERS AND UTILITIES FOR UNIX AND LINUX PRINTING

To provide printer spooling and network print server functionality, UNIX-based printing uses LPD/LPR port 515 or lp to port 9100. For information about UNIX-based printing, refer to UNIX, Linux, and AS/400 Printing.

For more information on installing print drivers and utilities for UNIX and Linux, refer to www.xerox.com/office/VLB415drivers.

More Information

You can obtain more information about your printer from these sources:

RESOURCE	LOCATION
Installation Guide	Packaged with the printer.
Getting Started guide	Print from the control panel. For details, refer to Information Pages.
Other documentation for your printer	www.xerox.com/office/VLB415docs
Recommended Media List	United States: www.xerox.com/rmlna European Union: www.xerox.com/rmleu
Technical support information for your printer, including online technical support, Online Support Assistant, and print driver downloads.	www.xerox.com/office/VLB415support
Information Pages	Print from the control panel. For details, refer to Information Pages.
Embedded Web Server information	In the Embedded Web Server, click **Help**.
Order supplies for your printer	www.xerox.com/office/supplies
A resource for tools and information, including interactive tutorials, printing templates, helpful tips, and customized features to meet your individual needs.	www.xerox.com/office/businessresourcecenter
Local sales and Technical Customer Support	www.xerox.com/office/worldcontacts
Printer registration	www.xerox.com/register
Xerox® Direct online store	www.direct.xerox.com/

LOCATING THE SERIAL NUMBER

When you order supplies or contact Xerox for assistance, you need the serial number of your device. You can obtain the serial number in several ways. To locate the serial number, print a configuration report, or view the serial number on the control panel or on the Embedded Web Server home page. The serial number is printed on a label that is affixed to the printer. To view the label, open Door A.

For details on how to print a configuration report, refer to Information Pages.

To view the serial number on the control panel:

1. At the printer control panel, press the **Home** button.
2. Touch **Device > About**.

   The model, serial number, and software version is displayed.
3. To return to the Home screen, press the **Home** button.

Personalize

This chapter contains:

Personalize Overview 72
Personalization by the User 73
Personalization from Adaptive Learning 79
1–Touch Apps 82
Creating Personalized Touchless Workflows 85
Removing All Personalizations 86

Personalize Overview

This chapter provides information on how to personalize your device user interface to meet the specific demands of your workflows.

Personalization enables individual logged-in users to work more productively, and ensures that the features and functions displayed meet individual user needs. Personalization allows you to configure apps, and hide, show, and rearrange apps on the Home screen to suit your job priorities.

The device uses the Adaptive Learning functionality to analyse the apps and features used when you are logged in to the device. The device provides personalized workflow suggestions based on your activity. As an individual user, you can choose the types of Adaptive Learning suggestions that you receive. You can enable or disable your suggestion options at the device control panel.

You can create private 1-Touch Apps to save and simplify lengthy or frequent workflows. After you create your 1-Touch Apps, they appear on the logged-in users Home screen. For each app, you can hide or show individual features and personalize default settings to meet your needs, and save job settings for repeated use.

System administrators can use the Customization feature to configure settings for all users. Customization allows the system administrator to do the following:

- Hide, show, and rearrange apps on the Home screen
- Create and edit 1-Touch Apps
- Hide or show app features
- Configure and save the default settings

For details, contact your system administrator, or refer to the *System Administrator Guide* at www.xerox.com/office/VLB415docs.

Note: Personalization settings configured by individual users override any equivalent Customization settings configured by the system administrator.

Personalization by the User

PERSONALIZING THE HOME SCREEN

Using the personalization options, you can show, hide, or change the display order of apps for the Home screen.

Displaying or Hiding an App on the Home screen

To display or hide an app on the Home screen for the logged-in user:

1. At the printer control panel, press the **Home** button.
2. Touch **Log In**. Type the User Name using the keypad, then touch **Next**. Type the Password using the keypad, then touch **Done**.
3. Scroll to the bottom, then touch **Personalize**.
4. Touch **Personalize Home**.
5. To display an installed, but hidden app:
   a. Touch the **Plus** (**+**) icon.
   b. Touch the app that you want to appear on the control panel.
6. To hide an installed app:
   a. For the required app, touch **X**.
   b. Touch **Hide**.
7. Touch **Done**.
8. Verify that only the required apps appear on the Home screen.

Rearranging Apps on the Home screen

To rearrange apps on the Home screen for the logged-in user:

1. At the printer control panel, press the **Home** button.
2. Touch **Log In**. Type the User Name using the keypad, then touch **Next**. Type the Password using the keypad, then touch **Done**.
3. Scroll to the bottom, then touch **Personalize**.
4. Touch **Personalize Home**.
5. Touch and hold the required app, then drag the app to the new location. Release the app.
6. Touch **Done**.
7. Verify that the apps appear in the correct location on the Home screen.

Deleting an App from the Home Screen

To delete an app from the Home screen for the logged-in user:

1. At the printer control panel, press the **Home** button.

2. Touch **Log In**. Type the User Name using the keypad, then touch **Next**. Type the Password using the keypad, then touch **Done**.
3. Scroll to the bottom, then touch **Personalize**.
4. Touch **Personalize Home**.
5. To delete an installed app:
   a. For the required app, touch **X**.
   b. At the prompt, touch **Delete**.
6. Touch **Done**.
7. Verify that only the required apps appear on the Home screen.

Removing Personalization From the Home Screen

To remove personalization from the Home screen for the logged-in user:

1. At the printer control panel, press the **Home** button.
2. Touch **Log In**. Type the User Name using the keypad, then touch **Next**. Type the Password using the keypad, then touch **Done**.
3. Scroll to the bottom, then touch **Personalize**.
4. Select an option:
   - **Remove Home Personalization**: This option removes all personalization from the Home screen.

> **Warning:** The Remove Home Personalization option removes personalization from the Home screen, and other personalized device settings.

   - **Remove All Personalization**: This option removes all personalization for the logged-in user, including personalized 1–Touch apps.

Note: Any customizations configured by the system administrator, including 1-Touch, EIP, Single Touch, and Weblet apps, are not affected.

5. At the prompt, touch **Remove**.

   Apps appear in the default location on the Home screen.
6. Touch **Done**.

PERSONALIZING ENTRY SCREEN DEFAULTS

Use the **Entry Screen Defaults** option to set the screen defaults or actions when a user logs in to the device for the first time. You can personalize the following options:

- **Device Default App**: The Device Default App is the initial app that appears to a logged-in user, or when the device is reset to default settings.
- **Originals Detected**: This feature sets the default app to launch when original documents are loaded in the automatic document feeder. The setting applies when the device control panel displays the Home screen only. The setting does not apply when a different app is open at the control panel.

If a selected app is no longer available, a notification displays and the entry screen defaults return to the factory default settings.

When both the **Auto Start When Originals Are Detected** feature and the **Originals Detected** feature are enabled for an app, you can create touchless workflows. For more information, refer to Creating Personalized Touchless Workflows.

Setting the Device Default App

To set the device default app for the logged-in user:

1. At the printer control panel, press the **Home** button.
2. Touch **Log In**. Type the user name using the keypad, then touch **Next**. Type the password using the keypad, then touch **Done**.
3. Touch **Personalize**.
4. Touch **Entry Screen Defaults**.
5. Touch **Device Default App**.
6. Touch the required app or 1-Touch App.
7. Touch **OK**.

Setting the Originals Detected Option

To set the default screen when original documents are detected:

1. At the printer control panel, press the **Home** button.
2. Touch **Log In**. Type the user name using the keypad, then touch **Next**. Type the password using the keypad, then touch **Done**.
3. Touch **Personalize**.
4. Touch **Entry Screen Defaults**.
5. Touch **Originals Detected**.
6. Touch the required app or 1-Touch App.
7. Touch **OK**.

PERSONALIZING THE APPS

The app personalization options enable you to modify the features available, save app default settings, or remove personalized settings applied to an app.

You can personalize the Copy, ID Card Copy, Email, Fax, and Scan To apps for your device.

Personalizing the Feature List

Personalization of Features list is available for Email, Scan To, Embedded Fax, and Copy apps.

To personalize the Features list for an app for the logged-in user:

1. At the printer control panel, press the **Home** button.
2. Touch **Log In**. Type the User Name using the keypad, then touch **Next**. Type the Password using the keypad, then touch **Done**.
3. Touch the app required.
4. Scroll to the bottom, then touch **Personalize**.
5. Touch **Personalize Feature List**.
6. Touch the required option.
   - To hide a feature, for the required feature, touch the **Eye** icon. To signify that the feature is hidden, the Eye icon appears with a line across it.
   - To show a feature, for the required feature, touch the **Eye** icon. To signify that a feature is visible, the Eye icon appears with no line across it.
7. To reorder the menu features, touch and drag the features into the appropriate order. If Adaptive Learning is enabled for Personalization, to order the feature list according to feature usage, touch the Adaptive Learning icon.
8. To save the current configuration, touch **Done**.

Showing all Features in the Features List

To show all the hidden features for an app:

1. At the printer control panel, press the **Home** button.
2. Touch the app required.
3. Select the job settings.
4. Scroll to the bottom, then touch **Show Additional Features**.

   The hidden features list appears.

Saving App Default Settings

You can use this feature to save a particular combination of app settings as the default settings. This feature is available for Email, Scan To, Embedded Fax, Copy, and ID Card Copy apps.

To save the current app settings as default settings for the logged-in user:

1. At the printer control panel, press the **Home** button.
2. Touch **Log In**. Type the user name using the keypad, then touch **Next**. Type the password using the keypad, then touch **Done**.
3. Touch the app required.
4. Select the job settings that you want to save as the default settings.
5. Scroll to the bottom of the feature list, then touch **Personalize**.
6. Touch **Save Settings as Default**.

7. At the prompt, touch **Save**.

   The new settings override the previous default settings.

Enabling the Auto Start Feature as an App Default Setting

The Auto Start When Originals Are Detected feature allows the device to start a job automatically within an app. The feature applies when an app is open and Auto Start is enabled for that app. When the device detects original documents in the automatic document feeder, the job starts automatically.

The Auto Start feature applies to Copy, Email, Fax, Scan To, and 1-Touch Apps.

When both the Auto Start When Originals Are Detected feature and the Originals Detected feature are enabled for an app, you can create touchless workflows. For more information, refer to Creating Personalized Touchless Workflows.

To enable the Auto Start feature for selected apps:

\

1. At the printer control panel, press the **Home** button.
2. Touch **Log In**. Type the user name using the keypad, then touch **Next**. Type the password using the keypad, then touch **Done**.
3. Touch the app required.
4. Select the job settings that you want to save as the default settings.
5. To enable Auto Start, touch the **Auto Start When Originals are Detected** toggle button.
6. Scroll to the bottom of the feature list, then touch **Personalize**.
7. Touch **Save Settings as Default**.
8. At the prompt, touch **Save**.

   When the logged-in user selects the app and loads original documents in the automatic document feeder, the job starts automatically.

Removing App Personalization Using the Control Panel

To remove the current app personalization settings:

1. At the printer control panel, press the **Home** button.
2. Touch **Log In**. Type the user name using the keypad, then touch **Next**. Type the password using the keypad, then touch **Done**.
3. Touch the app required.
4. Scroll to the bottom of the feature list, then touch **Personalize**.
5. Touch **Remove App Personalization**.
6. At the prompt, touch **Remove**.

PERSONALIZING THE LANGUAGE

A logged-in user can personalize the default language settings and the default keyboard layout.

Each time the user logs in to the device, the selected language and keyboard settings are activated.

To personalize the default language and keyboard layout:

1. At the printer control panel, press the **Home** button.
2. Touch **Log In**. Type the user name using the keypad, then touch **Next**. Type the password using the keypad, then touch **Done**.
3. Touch **Log In**, then touch **Personalize Language**.
4. To change the language, touch the language required.
5. To change the keyboard layout, touch **Keyboard Layout**, then touch the option required.
6. Touch **Done**.

Personalization from Adaptive Learning

Adaptive Learning reacts to everyday usage of the device to streamline tasks for users and administrators. Adaptive Learning provides personalized workflow suggestions for a logged-in user based on their use of certain applications. An individual user can choose the types of suggestions that they receive. Individual users can enable and disable their personalized suggestion options at the device control panel.

Adaptive Learning personalization offers workflow-automation suggestions to help logged-in users streamline their workflow. Personalized app workflow suggestions include the following:

- Creation of 1-Touch Apps for repetitive tasks
- Creation of 1-Touch Apps for complex tasks
- Reordering of app feature settings according to frequency of use
- Language preference settings

Adaptive Learning personalization is enabled by default. When Adaptive Learning personalization is enabled, all personalization suggestion options for logged-in users are enabled by default. When Adaptive Learning personalization is enabled, logged-in users can manage their personalization suggestions at the control panel.

1–TOUCH APP SUGGESTIONS

When Adaptive Learning and Personalization are enabled, the device offers to create a 1-Touch App for repeated or complex tasks.

If a logged-in user selects identical job programming repeatedly, after 7 days, a repetitive task is identified and the device suggests creating a 1-Touch App.

If a logged-in user selects six or more features for a job, a complex task is identified, and the device suggests creating a 1–Touch App for the repeated job.

The 1-Touch App suggestion is offered immediately after job submission. If the offer is accepted, a 1–Touch App is created. If the offer is declined, the same 1-Touch App suggestion is not offered again for 14 days.

To create a repeated or complex job 1–Touch App from a suggestion screen:

1. After job submission, if a repeated or complex job is identified, the suggestion screen appears. From the suggestion screen, touch **Create 1–Touch App**.
2. To enter a name, touch the **Enter 1–Touch App Name** entry field, then use the alphanumeric keypad. Touch **Next**.
3. Do one of the following:
   - To create the 1-Touch App with the default settings, touch **Create 1-Touch App**.
   - To modify the 1-Touch App settings, touch **Personalize Appearance**, then do the following:
     1. Touch a color scheme option for your 1-Touch App, then touch **Next**.
     2. Touch an icon that best suits the 1-Touch App that you are creating, then touch **Next**.
     3. To provide instructions that appear at the top of the app screen, touch the entry field, then use the alphanumeric keypad to enter instructions for users. Touch **Done**.

   The system saves the 1–Touch App, and the app appears on the Home screen for the logged-in user.

FEATURE LIST ORDER SUGGESTIONS

When Adaptive Learning and Personalization are enabled, the device offers to reorder the features listed in an app based on the usage history of the logged-in user.

The device collects feature usage data for 30 days. After 10 job submissions during the 30 days, when a user logs in to the device and selects an app, if the usage order does not match the current order, the device offers to reorder the feature list.

If the suggestion is accepted, the most frequently used features are moved to the top of the list. Features that have never been used are hidden and moved to the Show Additional Features area.

Whether the suggestion is accepted or declined, there are no additional offers to reorder the list for 14 days.

To reorder the feature list from a suggestion screen:

1. At the printer control panel, press the **Home** button.
2. Touch **Log In**. Type the user name using the keypad, then touch **Next**. Type the password using the keypad, then touch **Done**.
3. Touch the app required. If the device has collected usage data for 30 days or more, a suggestion screen appears.
4. To accept the offer to reorder features, touch **Reorder Features**. The features are reordered based on the usage history of the logged-in user.
5. To modify the feature list manually, touch the required option, then do the following:
   - To hide a feature, for the required feature, touch the Eye icon. To signify that the feature is hidden, the Eye icon appears with a line across it.
   - To show a feature, for the required feature, touch the Eye icon. To signify that a feature is visible, the Eye icon appears with no line across it.
   - To reorder the menu features, touch and drag the features into the appropriate order.
6. Touch **Done**.

PERSONALIZED LANGUAGE SUGGESTIONS

When Adaptive Learning and Personalization are enabled, if a logged-in user selects a different language, the device offers to change the language immediately after the user changes the current language.

To personalize the language from a suggestion screen:

1. At the printer control panel, press the **Home** button.
2. Touch **Log In**. Type the user name using the keypad, then touch **Next**. Type the password using the keypad, then touch **Done**.
3. If the logged-in user changed the language in the previous session, a suggestion screen appears. To accept the offer to change your default language, touch **Make Default**.

   The default language for the logged-in user is changed.

MANAGING YOUR PERSONALIZATION SUGGESTIONS

When Adaptive Learning and Personalization are enabled, the device provides suggestions for an improved user experience at the device.

To manage your personalization suggestions:

1. At the printer control panel, press the **Home** button.
2. Touch **Log In**. Type the user name using the keypad, then touch **Next**. Type the password using the keypad, then touch **Done**.
3. Touch **Log In**, then touch **Manage Suggestions**.
   Alternatively, you can access the **Manage Suggestions** option from each suggestion screen.
4. Touch the options required:
   - **Repetitive 1-Touch App**: Use this option to receive a suggestion to create a 1-Touch App for jobs that you program repeatedly.
   - **Complex 1-Touch App:**: Use this option to receive a suggestion to create a 1-Touch App for jobs with six or more feature selections.
   - **Feature Order:**: Use this option to receive a suggestion to update the feature list order, to list features that you use more frequently at the top.
   - **Language:**: Use this option to receive a suggestion to change the language when a different language is selected.
5. Touch **OK**.

1–Touch Apps

1-Touch Apps are individual apps which are created to allow completion of frequent jobs or tasks. You can create 1-Touch Apps in Copy, Email, Fax, and Scan To apps.

The following types of 1-Touch Apps are available:

- Public 1-Touch Apps: Device administrators and users with customization privileges can create public 1-Touch Apps, When you create a public 1-Touch App, you can configure the app to allow users to make temporary changes to the app feature settings. When the app is reset, any temporary changes are discarded. The app can also be configured to prevent users from viewing or changing the app feature settings. The public 1-Touch App appears on the device Home screen. Device administrators and users with customization privileges can save an existing public 1-Touch App as a new public 1-Touch App, then adjust the appearance and default settings for the new app as needed. If Personalization is enabled, all logged-in users can save a public 1-Touch App as a new private 1- Touch App, then adjust the appearance and default settings for the new app as needed.
- Private 1-Touch Apps: If Personalization is enabled, all logged-in users can create private 1-Touch Apps. Private 1-Touch Apps are available only for the user that created the app, and appear only on the Home screen for the logged-in user. After you create a private 1-Touch App, you can save the app as a new private 1-Touch App, then adjust the appearance and default settings for the new app as needed.

  Note: All private 1-touch Apps allow for temporary changes. When the app is reset, any temporary changes are discarded.

  All private 1-touch Apps allow for temporary changes. When the app is reset, any temporary changes are discarded.

For information about configuring public 1–Touch Apps, refer to the *System Administrator Guide* at www.xerox.com/office/VLB415docs.

CREATING A PRIVATE 1–TOUCH APP

To create a private 1-Touch App for the logged-in user:

1. At the printer control panel, press the **Home** button.
2. Touch **Log In**. Type the user name using the keypad, then touch **Next**. Type the password using the keypad, then touch **Done**.
3. Touch the app required.
4. Select the job settings for the 1-Touch App, as required.
5. Scroll to the bottom of the feature list, then touch **Create 1-Touch App**.
6. To enter a name, touch the **Enter 1-Touch App Name** entry field, then use the alphanumeric keypad. Touch **Next**.

7. Do one of the following:
   - To create the 1-Touch App with the default settings, touch **Create 1-Touch App**.
   - To modify the 1-Touch App settings, touch **Personalize Appearance**, then do the following:
     1. Touch a color scheme option for your 1-Touch App, then touch **Next**.
     2. Touch an icon that best suits the 1-Touch App that you are creating, then touch **Next**.
     3. To provide instructions that appear at the top of the app screen, touch the entry field, then use the alphanumeric keypad to enter instructions for users. Touch **Done**.

   The system saves the 1-Touch App, and the app appears on the Home screen for the logged-in user. The 1-Touch App is hidden from all other users.

CREATING A PRIVATE 1–TOUCH APP FROM A PUBLIC 1–TOUCH APP

To create a private 1-Touch App from an existing public 1-Touch App:

1. At the printer control panel, press the **Home** button.
2. Touch **Log In**. Type the user name using the keypad, then touch **Next**. Type the password using the keypad, then touch **Done**.
3. Touch the public 1-Touch App required.
4. Scroll to the bottom of the feature list, then touch **Save As New 1-Touch App**.
5. To enter a name, touch the **Enter 1-Touch App Name** entry field, then use the alphanumeric keypad. Touch **Next**.
6. Do one of the following:
   - To create the 1-Touch App with the default settings, touch **Create 1-Touch App**.
   - To modify the 1-Touch App settings, touch **Personalize Appearance**, then do the following:
     1. Touch a color scheme option for your 1-Touch App, then touch **Next**.
     2. Touch an icon that best suits the 1-Touch App that you are creating, then touch **Next**.
     3. To provide instructions that appear at the top of the app screen, touch the entry field, then use the alphanumeric keypad to enter instructions for users. Touch **Done**.

   The system saves the 1-Touch App, and the app appears on the Home screen for the logged-in user. The 1-Touch App is hidden from all other users.

EDITING A 1–TOUCH APP

To delete or hide a 1-Touch App from the Home screen:

1. At the printer control panel, press the **Home** button.
2. Touch **Log In**. Type the user name using the keypad, then touch **Next**. Type the password using the keypad, then touch **Done**.
3. Touch **Personalize**.
4. Touch **Personalize Home**.

5. For the required 1-Touch App, touch **X**, then touch an option.
   - **Delete**: Use this option to delete the 1-Touch App from the printer permanently.
   - **Hide**: Use this option to remove the 1-Touch App from the Home screen. The 1-Touch App is still available, and you can add the app to the Home screen at any time.
6. Touch **Done**.

DELETING OR HIDING A 1–TOUCH APP

To delete or hide a 1-Touch App from the Home screen:

1. At the printer control panel, press the **Home** button.
2. Touch **Log In**. Type the User Name using the keypad, then touch **Next**. Type the Password using the keypad, then touch **Done**.
3. Touch **Personalize**.
4. Touch **Personalize Home**.
5. For the required 1-Touch App, touch **X**, then touch an option.
   - **Delete**: Use this option to delete the 1-Touch App from the printer permanently.
   - **Hide**: Use this option to remove the 1-Touch App from the Home screen. The 1-Touch App is still available, and you can add the app to the Home screen at any time.
6. Touch **Done**.

USING AND EDITING A 1–TOUCH APP

To use a 1-Touch App:

1. At the printer control panel, press the **Home** button.
2. If required, touch **Log In**. Type the user name using the keypad, then touch **Next**. Type the password using the keypad, then touch **Done**.
3. Load the original documents in the automatic document feeder or on the document glass.
4. Touch the 1-Touch App required.
5. If editing is enabled, edit the feature settings as required. If editing is restricted, to create a new 1-Touch, select **Save As New 1–Touch**, then edit the new 1-Touch App.
6. Touch **Start**.
7. To return to the Home screen, press the **Home** button.

Creating Personalized Touchless Workflows

When Personalization is enabled, a logged-in user can use the Entry Screen Defaults settings, with the Auto Start When Originals Are Detected feature to create a touchless workflow.

Touchless workflows improve productivity by configuring the device to perform automatic operations when original documents are placed in the automatic document feeder. Touchless workflows save time for repetitive or regular activities performed on the device.

In this scenario, a user receives multiple sets of high-quality, hard-copy printed documents for scanning and proofing every day. The user logs in to the device, and creates a private 1-Touch App based on the Scan To App. The private 1-Touch App has the image quality and destination settings configured, and the Auto Start When Originals Are Detected feature enabled. To personalize the Entry Screen Defaults, for Device Default App and Originals Detected, the user chooses the private 1-Touch App. Each day, to run the job, the user logs in to the device, and places the first set of original documents in the automatic document feeder. The private 1-Touch App launches automatically, and the job initiates within 7 seconds. The first job completes, then the user continues to load each set of documents into the automatic document feeder. Each job completes, and the scanned images are sent to the preprogrammed destination, without any user interaction with the touch screen.

For information about creating and using 1-Touch Apps, refer to 1–Touch Apps.

For instructions on personalizing app default settings, refer to Personalizing the Apps.

For information about setting the Entry Screen Defaults, refer to Personalizing Entry Screen Defaults.

Removing All Personalizations

To remove all personalizations from the device:

1. At the printer control panel, press the **Home** button.
2. Touch **Log In**. Type the User Name using the keypad, then touch **Next**. Type the Password using the keypad, then touch **Done**.
3. Scroll to the bottom, then touch **Personalize**.
4. Touch **Remove All Personalizations**.

> **Warning:** The Remove Home Personalization option removes personalization from the Home screen, and other personalized device settings.

5. At the prompt, touch **Remove All**.

Xerox® Apps

This chapter contains:

Xerox® App Gallery 88
Device 91
Jobs 100
Copy 107
ID Card Copy 118
Email 119
Workflow Scanning 123
Scan To 134
Fax 142
Server Fax 149
Print From 153
@PrintByXerox 156
Xerox® Connect for XMPie 157

Xerox® Apps are a gateway to the features and functions of your device. There are standard Apps already installed and displayed on the Home screen. Some Apps are installed as standard, but are hidden when you use your device for the first time. You can show, hide, or reorder Apps on the Home screen using the settings available in the Embedded Web Server.

For details about displaying, configuring, and customizing the Apps, refer to the *System Administrator Guide* at www.xerox.com/office/VLB415docs.

A range of Apps is available for download and installation from the Xerox® App Gallery. These apps include Xerox® Extensible Interface Platform (EIP) Apps. EIP Apps enable you to install secure, signed apps on compatible printers.

For more information about using the Xerox® App Gallery and downloading Apps, refer to Xerox® App Gallery.

Xerox® App Gallery

XEROX® APP GALLERY OVERVIEW

Use the Xerox® App Gallery to find apps that provide new features or capabilities for your device. The Xerox® App Gallery provides direct access to apps that can improve your productivity, simplify workflows, and enhance your user experience.

The Xerox® App Gallery enables you to browse and update apps easily. You can browse the App Gallery without logging in. The moving banner provides an active display of apps, or you can scroll the full list of apps. To get more details on an app, touch the app name in the list.

To use the Xerox® App Gallery App, ensure that your device uses either the wireless or the wired network connection.

Note: If your device is configured to access the Internet through a proxy, to allow the Xerox® App Gallery App to access the Internet, ensure that the proxy is configured correctly.

For more information and instructions on using the Xerox® App Gallery, refer to the *Xerox® App Gallery User Guide* available at www.xerox.com/XeroxAppGallery.

If authentication or accounting is enabled on your device, to access features, enter your login details. For details about Personalization for logged-in users, refer to Personalize.

CREATING A XEROX® APP GALLERY ACCOUNT

With an App Gallery account, you have direct access to all the available Apps for your device. An App Gallery account allows you to view and acquire Apps, install Apps on your device, and manage your Apps and licenses.

You can set up an App Gallery account using the control panel or the Xerox® App Gallery Web portal. For more information about the Xerox® App Gallery Web portal, refer to www.xerox.com/XeroxAppGallery.

Note: If you have an existing Xerox App Gallery Account, refer to Logging in to your Xerox® App Gallery Account.

To create an App Gallery account using the Control Panel:

1. At the printer control panel, press the **Home** button.
2. Touch **Xerox App Gallery**.
3. Touch **Log In**.
4. Touch **Create Account**.

5. Enter the information required into the appropriate fields:
   - Email Address
   - Confirm Email Address
   - Password
   - Confirm Password
   - First and Last Name
   - Company Name
   - Country
   - Payment Currency
6. Review and accept the Terms of Service and the Data Administration Terms of Service, then click **OK**.
7. After the account is created, a message appears that confirms that completion instructions will be sent to the email address entered in step 5.
8. To complete the account creation process, verify your account:
   a. Access the inbox for the email address provided in step 5, then open the *Welcome to Xerox® App Gallery* email.
   b. Click **Verify Account**.

      A webpage opens.
   c. To complete the verification process, enter the email address and password entered in step 5, then click **Log In**.

      A welcome message appears that confirms that the account verification process is complete.

LOGGING IN TO YOUR XEROX® APP GALLERY ACCOUNT

When you are logged in to the App Gallery, you can browse available Apps, and install and update Apps.

To log in to your App Gallery Account:

1. At the printer control panel, press the **Home** button.
2. Touch **Xerox App Gallery**, then select **Log In**.
3. To enter your email address, use the touch screen keypad.
4. To enter your password, use the touch screen keypad.
5. To log in, touch **OK** or **Enter**.

INSTALLING OR UPDATING AN APP FROM THE XEROX® APP GALLERY

Xerox® Apps add to, extend, or customize the functionality of your device. You can use the Xerox®App Gallery App to browse and install Apps at your device control panel.

To install an App from the App Gallery:

1. At the printer control panel, press the **Home** button.

2. Touch **Xerox App Gallery**, then select **Log In**.
3. To enter your email address, use the touch screen keypad.
4. To enter your password, use the touch screen keypad.
5. Touch **OK** or **Enter**.
6. Touch the App required, then touch **Install**. The License Agreement screen appears.

   Note: If the App was installed previously and a new version is available, the **Install** option changes to an **Update** option.

7. Touch **Agree**. The installation process begins.

   If the App does not successfully install, to attempt the installation process again, touch **Install**.

8. To exit the Xerox® App Gallery App, press the **Home** button.

Updating an App from the App Gallery

1. At the printer control panel, press the **Home** button.
2. Touch **Xerox App Gallery**, then select **Log In**.
3. To enter your email address, use the touch screen keypad.
4. To enter your password, use the touch screen keypad.
5. Touch **OK** or **Enter**.
6. Touch the App required, then touch **Update**. The License Agreement screen appears.
7. Touch **Agree**.
8. When the update is complete, the Update option changes to an Installed status.
9. To exit the Xerox® App Gallery App, press the **Home** button.

Device

DEVICE OVERVIEW

The Device App gives you access to information about your printer, including the serial number and model. You can view the status of the paper trays, billing and supplies information, and print information pages.

Many Device options can be configured to meet your individual needs. For details about configuring all of the Device settings, refer to the *System Administrator Guide* at www.xerox.com/office/VLB415docs.

Device Options

The following device options are available:

OPTION		DESCRIPTION
	Admin Personalization Settings	For logged-in users, Personalization Settings provides access to the **Personalized Language** and **Manage Suggestions** options. For more information about Personalization settings, refer to Personalize.
	Language	Pressing the Language button allows you to set the language that appears on the control panel touch screen. Note: Sometimes this option is hidden from view. For details, refer to *System Administrator Guide* at www.xerox.com/office/VLB415docs.
	Accessibility	Pressing Accessibility allows you to access the **Invert Display Color** feature, that changes the appearance of the control panel touch screen. For more information, refer to Accessibility.
	About	The About option provides an overview of your device, the device serial number, and information about current settings.
	Information Pages	Your printer has a set of information pages that you can print. These pages include configuration and font information, demonstration pages, and more.
	Notifications	Use the Notifications option to see details of any current alerts or errors on the device. A Fault History option displays fault codes and the date that they occurred on the device.
	Paper Trays	Use the Paper Trays option to see the paper size, type, and color set for each paper tray and the tray-capacity status.
	Supplies	Use the Supplies section to monitor the status of the components you can replace. The supply level and estimated number of impressions or days that remain for each unit are displayed.

OPTION		DESCRIPTION
	Billing/Usage	Use the Billing/Usage option to view the serial number and the total number of impressions your device has made.
	Tools	Use the Tools option to customize settings, such as the power-save modes, the date and time, and the control panel brightness. You can configure settings using the device control panel or the Embedded Web Server. Note: For details on configuring the printer settings, refer to *System Administrator Guide* at www.xerox.com/office/VLB415docs.
	Web-Based Configuration (Test Drive)	Use the Web-Based Configuration (Test Drive) tool to access device capabilities and configuration options available on the Embedded Web Server, at the device control panel. Note: Some Embedded Web Server configuration options and features are restricted. Examples of restricted options and features are downloading and installing files, and accessing links that redirect to external websites.
	Remote Services	Use the Remote Services option to send error and usage information to the Xerox support team. Note: Your System Administrator is required to enable this feature using the Embedded Web Server.
	Xerox Easy Assist App	Use the Xerox Easy Assist app to access and configure the printer from your smartphone. By installing the Xerox Easy Assist app on your smartphone, you can setup your new printer easily, manage its configuration, view alerts indicating supply requirements and order them, and get live troubleshooting support for your printer. For more information, refer to Xerox® Easy Assist (XEA) App.

For details on configuring the printer settings, refer to the *System Administrator Guide* at www.xerox.com/office/VLB415docs.

ACCESSIBILITY

Invert Display Color

Invert Display Color allows you to invert the colors of the control panel display.

1. At the printer control panel, press the **Home** button.
2. Touch **Device > Accessibility**.

   A new window appears for Accessibility.
3. To invert the display color of the control panel screen, touch the **Invert Display Color** toggle button.

4. Touch **OK**.

The inversion of the display color only applies to individual users during their session. Inversion of the display color gets cleared when:

- The user changes it back
- The current session ends
- User does a **Reset All**.

To change the default settings, refer to *System Administrator Guide* at www.xerox.com/office/VLB415docs.

ABOUT

The About option provides an overview of your device and its current settings and status. You can view the serial number, model number, and software version.

INFORMATION PAGES

Your printer has a set of information pages that you can print. These pages include configuration and font information, getting started pages, and more.

The following Information Pages are available:

NAME	DESCRIPTION
Basic Configuration Report	The Basic Configuration Report provides printer information, including the serial number, installed options, network settings, port setup, tray information, and more.
Detailed Configuration Report	The Detailed Configuration Report provides information about all of the printer settings, including extensible services setup, security and authentication server configuration, connectivity settings, and more.
Billing Summary	The Billing Summary Report provides information about the device and a detailed listing of the billing meters and sheet counts.
Getting Started	The *Getting Started* guide provides an overview of the key features of the printer.
Troubleshooting Print Quality Page	The Troubleshooting Print Quality Page provides a list of common print-quality problems and tips to help solve them.
Supplies Usage Page	The Supplies Usage Page provides coverage information and part numbers for reordering supplies.
Graphics Demo Page	Print this page to check the quality of graphics.

NAME	DESCRIPTION
PCL Font List	The PCL Font List provides a printout of all PCL fonts that are available on the printer.
PostScript Font List	The PostScript Font List provides a printout of all PostScript fonts that are available on the printer.

Printing Information Pages

1. At the printer control panel, press the **Home** button.
2. Touch **Device > Information Pages**.
3. To print an information page, touch the needed page, then touch **Print**.

   The printer prints the selected information page.
4. To return to the Home screen, press the **Home** button.

SUPPLY STATUS

You can check the status and percentage of life remaining for your printer supplies at the control panel or from the Embedded Web Server. When printer supplies near their replacement time, warning alerts appear on the control panel. You can customize the alerts that appear on the control panel and configure email alert notifications.

To check the supplies status at the control panel:

1. To view status information for the printer supplies, touch **Device > Supplies**.
2. To view details about a specific item, including its part number for reordering, touch the required item.
3. To return to the Supplies screen, touch **X**.
4. To return to the Device screen, touch **X**.

To check the supplies status and set up alerts, use the Embedded Web Server. For details about configuring all Device settings, refer to the *System Administrator Guide* at www.xerox.com/office/VLB415docs.

BILLING AND USAGE COUNTERS

The Billing/Usage menu displays the total number of impressions that the printer generated or printed during its lifetime. You cannot reset the counters. A page is counted as one side of a sheet of paper. For example, a sheet of paper that is printed on two sides counts as two impressions.

To view the Billing and Usage Counters:

1. At the printer control panel, press the **Home** button.
2. Touch **Device > Billing/Usage**.

3. To view more details, touch **Usage Counters**, then select an option.
   - **Impression Counters**: This option provides the number of impressions made by the printer. The number of impressions cannot equal the number of sheets counted, depending on the printer setup. If your printer is set up to count large sheets as large impressions or as multiple smaller impressions, the number of impressions can differ.
   - **Sheet Counters**: This option provides the number of impressions made by the printer. Impressions for 2-Sided sheets are identified as a separate line from 1-Sided sheets.
   - **Images Sent Counters**: This option provides the number of images sent using the Fax, Email, or Scan features.
   - **Fax Impressions Counters**: This option provides the number of images sent using the Fax features. Each fax feature is identified on a separate line.
   - **All Usage Counters**: This option provides all printer usage information.
4. After viewing the usage readings, to return to the Home screen, press the **Home** button.

REMOTE SERVICES

You can use the Remote Services option to send error and usage information to the Xerox support team to help them resolve problems quickly.

For information about enabling Remote Services and uploading information to Xerox, refer to the *System Administrator Guide* at www.xerox.com/office/VLB415docs.

XEROX® EASY ASSIST (XEA) APP

Xerox Easy Assist app allows you to access and configure the printer from your smartphone. To access the printer from your smartphone, download and install the Xerox Easy Assist app on your mobile device. By installing the Xerox Easy Assist app on your smartphone, you can setup your new printer easily, manage its configuration, view alerts indicating supply requirements and order them, and get live troubleshooting support for your printer.

To install the Xerox Easy Assist app on your smartphone, you need to scan a QR Code or search the app in the Apple App Store or Google Play Store. There are two types of XEA QR Codes:

- QR Code to acquire the XEA app: This QR Code is for the initial installation of the app. To install the Xerox Easy Assist app for the first time, you are required to scan this QR Code using your smartphone camera. You can find this QR Code on the packaging box or the *Installation Guide* that comes with the printer. Check the following locations for the XEA QR Code:
  - Printer packaging box
  - Installation Guide
  - Device Install Wizard
  - Help materials

  For more information, refer to Prior to Installing the Printer: Initial Setup with Xerox® Easy Assist (XEA) App.
- QR Code to connect the mobile device to the printer: This QR Code is to setup a wireless network connection between the smartphone and the printer. For example, connection to Wi-Fi Direct. You can find this QR Code at the printer control panel or in the device Install Wizard. The QR Code provides all key information to connect your smartphone and the printer without manually entering any technical information. To connect to the

printer, scan this QR Code within the Xerox Easy Assist app. For more information, refer to After Initial Installation: Connecting to the Xerox® Easy Assist App from the Control Panel.

Primary features of Xerox Easy Assist app are:

Set Up a New Printer

If you have the QR Code or IP Address available, you can set up a new Xerox printer with the help of Xerox Easy Assist app. On My Printers screen in the app, touch the **+** icon, then touch **Set Up a New Printer**. Follow the instructions from the app.

For more information, refer to Adding Multiple Printers to the Xerox Easy Assist App.

Printer Status

The status displays the printer information, such as readiness of the printer, toner level, and paper tray status for each tray. You can order parts and supplies through the Xerox Easy Assist app. If the toner level appears to be low, to order a new toner, select the **Toner** icon, then touch **Reorder**.

Alerts

The Xerox Easy Assist app can notify you of any errors or problems in the printer. To view the error statement, touch the **Bell** icon.

Print

You can perform a print job through the Xerox Easy Assist app. In the app, select your printer, then touch **Print**. Select the document that you need to print from your mobile device, confirm the print settings, then touch **Print**.

Device Settings

You can view and edit your printer settings from the **Device Settings** tab. If you have not setup a password during the initial setup, to view or edit existing printer settings, you need to set up the password.

Support

You can request support and find solutions for printer-related problems through the Xerox Easy Assist app. In the app, select your printer, then touch **Support**. It connects you to Xerox's Support Agent Live Chatbot.

Set Up Computer

You can download Print and Scan Drivers for your printer through Xerox Easy Assist app. In the app, select your printer, then touch **Set Up Computer**. In the Email field, type your registered email address, then touch the **+** icon to add your email. To download and install the Print and Scan Drivers, the app sends a Quick Link to your email address.

Print Test Page

To confirm that all settings are correct, you can print a test page. In the app, select your printer, then touch **Print Test Page**.

Remove a Printer

You can remove a printer from the Xerox Easy Assist app. On your app, select a printer from My Printers page, then swipe left and touch **Remove**.

Prior to Installing the Printer: Initial Setup with Xerox® Easy Assist (XEA) App

To complete the initial setup and install the Xerox Easy Assist app for the first time, do the following:

1. For initial setup when the printer is powered on for the first time, the initial setup wizard appears. At the printer control panel, do the following:
   a. Select your **Language**, then touch **Next**.

      The Xerox Easy Assist Mobile App screen appears.

   b. To use your mobile device to set up and manage your printer, touch **Yes**.

      Get the App screen appears to confirm the type of your mobile device. Choose any one option:

      - **iOS**: To install the Xerox Easy Assist app for your iPhone, select this option.
      - **Android**: To install the Xerox Easy Assist app for your Android mobile device, select this option.
      - **I have the App**: If you have already installed Xerox Easy Assist app on your mobile device, select this option.
2. If you have selected iOS or Android option, a screen appears to help you download the app. At the control panel, touch **Show QR Code** option.

   A screen appears with the QR Code. To install the app, scan the QR Code with your smartphone camera.
3. Download and install the Xerox Easy Assist app on your smartphone:
   - For Android phones: Go to Google Play Store, then search for Xerox Easy Assist app.
   - For iOS or iPhones: Go to Apple App Store, then search for Xerox Easy Assist app.
4. When you install the app for the first time on your smartphone, for End-User License Agreement (EULA), touch **I Agree**.

   Note: The Xerox Easy Assist App has instructions that help you to unpack the printer from its packaging box. To watch a helpful video on how to unpack your printer, scan the QR Code on the packaging box or the *Installation Guide* that came with your printer, using your smartphone camera. Accept the End-User License Agreement (EULA), then follow the instructions that appear on the app.
5. Follow the instructions that appear on the app. To connect your smartphone with the printer, touch **Connect To My Printer**.
6. At the printer control panel, to connect to the app, touch **Show QR Code** option. The second or connect–QR Code appears.
7. Scan the QR Code through the Xerox Easy Assist app. Follow the instructions that appear on the app.

   When the connection is configured, your smartphone and the printer share the same wireless network, temporarily.
8. With the support of Xerox Easy Assist app, complete the general settings and register the printer on the network.
   General settings include Admin Password, Connectivity, Measurements, Sound, Power Saver settings, and more.

   Note: Ensure that your smartphone is connected to the same Wireless or wired network as the printer and they can communicate after the setup is complete.

9. To complete the initial setup in the app, type the necessary information for your printer, then touch **Complete Setup**.

   The Welcome screen appears.

When the initial setup is complete, with the Xerox Easy Assist app, you can perform the following:

- Setting up a new printer
- Checking the printer status and order supplies
- Downloading Print and Scan Drivers
- Printing
- Getting troubleshooting support
- Removing a printer from the XEA app My Printers list

For Xerox Easy Assist app features, refer to Xerox® Easy Assist (XEA) App.

After Initial Installation: Connecting to the Xerox® Easy Assist App from the Control Panel

For a printer that is already installed and does not require initial installation setup, to use the features of the XEA app, connect the printer to Xerox Easy Assist app. By accessing Xerox Easy Assist (XEA) app through your smartphone, you can setup additional printers, manage its configuration, view alerts indicating supply requirements and order them, and get live troubleshooting support for your printer. You can find the QR Code and connect to the XEA app from the printer control panel:

1. At the control panel Home screen, touch **Device**.
2. From Device options, touch the icon for **Xerox Easy Assist App**.

   The Xerox Easy Assist App screen appears with a display of main features Setup, Manage, and Print.
3. Select from the following options:
   - **Get Started**: Select this option to connect and add the printer to the XEA app.
   - **Close**: Select this option to return to the Device screen.
4. To add the printer to the app, touch **Get Started**.

   Get the App screen appears on the printer control panel.
5. Touch any one option:
   - **Back**: To return to the initial XEA app screen, select this option.
   - **I Have the App**: When you have the XEA app installed on your smartphone, select this option.
   - **Android**: To install the XEA app from Google Play Store, select this option.
   - **iOS**: To install the XEA app from Apple App Store, select this option.
6. If you have the XEA app installed on your smartphone already, then touch **I Have the App**.

   Connect to Xerox Easy Assist Mobile App screen appears with a QR Code.
7. To connect the printer to the app, scan the QR Code through the XEA app, then follow the instructions that appear on your smartphone and the control panel.

8. To view the Wireless network information, touch **Manual Entry**. The Wi-Fi Direct information appear on the control panel touchscreen. To connect the printer to the app, you can type the Wi-Fi Direct information manually on the XEA app.

Note: If the printer and mobile device cannot communicate, ensure that they are on the same network.

9. To return to the Connect to Xerox Easy Assist Mobile App screen, touch **Close**.
10. To return to the Xerox Easy Assist App main screen, touch **Back**.

Adding Multiple Printers to the Xerox Easy Assist App

If your printer is already set up on your network and the Initial Setup Wizard is complete, through the XEA app, you can include additional printers directly to the list of My Printers. To add printers that are on the network, open the XEA app Home page. On the My Printers screen, touch the **+** icon, then refer to the following options:

- **Setting Up a New Printer**: To set up a new printer from your smartphone XEA app, at the Add Printer screen, select **Set Up a New Printer**. Follow the instructions that appear on the printer control panel and your mobile device.
- **Adding an Existing Printer**: To add an existing printer from the network, select any one from the options:
  - **QR Code**: To scan the printer QR Code with the XEA app scanner, touch **QR Code**. To find the QR Code of the printer, refer to After Initial Installation: Connecting to the Xerox® Easy Assist App from the Control Panel.
  - **IP Address**: To connect to the printer by typing the IP Address manually, touch **IP Address**. Type the IP Address of the printer, then touch **OK**. To find the IP Address of the printer, refer to Finding the IP Address of Your Printer.
- **Finding the Nearby Network Printers**: When your smartphone is connected to the same wireless or wired network as the printer, to find nearby printers, select **Printers Around Me**. The app looks for nearby printers on the network:
  - If the app finds the printer, you can select and add the printer directly.
  - If the app is unable to find the printer you are looking for, then you can add the printer by typing its IP address.

Note: If the printer and mobile device cannot communicate, ensure that they are on the same network.

Jobs

JOBS OVERVIEW

You can use Jobs to view current jobs, print saved and secure jobs, and view details about completed jobs. You can pause, delete, print, or view job progress or job details for a selected job.

JOB OPTIONS

The following job options are available:

OPTION		DESCRIPTION
	Interrupt Button	When enabled by the System Administrator, pressing the **Interrupt** button allows you to pause the current job to run a more urgent job. Note: Sometimes this option is hidden from view. To enable the Interrupt function, refer to the *System Administrator Guide* at www.xerox.com/office/VLB415docs.
	Pause Button	Pressing the **Pause** button allows you to temporarily pause an active print job. The job pauses with the option to resume printing or to delete the job.

MANAGING JOBS

From the control panel Jobs menu, you can view lists of active jobs, secure jobs, or completed jobs. You can interrupt, pause, or delete jobs that are printing. You can also view job progress or job details for a selected job.

A print job can be held by the printer when it is unable to complete the job. For example, if the printer needs attention, paper, or supplies. When the condition is resolved, the printer automatically resumes printing. When you send a Secure Print job, the job is held until you release it by entering a passcode at the control panel. For more details, refer to Managing Special Job Types.

From the Jobs window in the Embedded Web Server, you can view a list of active and saved print jobs. For more details, refer to Managing Jobs using the Embedded Web Server.

Interrupting Printing

System Administrators can allow users to interrupt active print jobs. For details about **Interrupt Printing Enablement**, refer to the *System Administrator Guide* at www.xerox.com/office/VLB415docs.

1. At the printer control panel, press the **Home** button.
2. Touch **Jobs**.

   A list with active jobs, that are queued for the printer, appears.

3. At the control panel, touch the **Interrupt** button. The printer continues to print while it determines the best place to pause the spooled print job.
4. Printing stops to allow the printer to complete another job.
5. To resume printing, touch the **Interrupt** button again.

Pausing or Deleting a Print Job

1. At the printer control panel, press the **Home** button.
2. Touch **Jobs**.

   A list with active jobs, that are queued for the printer, appears.
3. To pause a job that is printing, touch the **Pause** button on the control panel.
4. Select a task.
   - To resume the print job, touch **Resume**.
   - To delete the print job, touch **Delete**. At the prompt, touch **Delete**.
5. To return to the Home screen, press the **Home** button.

Printing a Job Held for Resources

When a job is held for resources, a status message and a pop-up alert appear on the control panel, as default. From the Embedded Web Server, the system administrator can configure whether only a status message appears or both status message and a pop-up alert appear on the control panel.

1. If the pop-up alert is disabled by the system administrator, to view the held jobs, do the following:
   a. At the printer control panel, press the **Home** button.
   b. Touch **Jobs**.

      A list with active jobs, that are queued for the printer, appears.
2. When the pop-up alert is enabled, if a job is held for resources, a pop-up alert appears on the control panel. On the pop-up alert, touch **View Active Jobs**.

   A list with active jobs, that are queued for the printer, appears.
3. From the jobs list, touch the held job name. The following options appear:
   - **Print On Alternate Paper**: To choose an alternative paper source to enable the job to print, touch **Print On Alternate Paper**. Select a paper tray, then touch **OK**.
   - **Delete**: To delete the print job, touch **Delete**. At the prompt, touch **Delete**.
   - **Job Progress**: To view the progress, touch **Job Progress**.
   - **Job Details**: To view the details, touch **Job Details**. At the prompt, you can view the Job Settings and Required Resources.

4. To print the job, replenish the resources required. The job resumes automatically when the required or alternate resources are available.

   Note: The **Print On Alternate Paper** option is enabled using the Embedded Web Server. For details about the Print On Alternate Paper option, refer to the *System Administrator Guide* at www.xerox.com/office/VLB415docs.

5. To return to the Home screen, press the **Home** button.

MANAGING SPECIAL JOB TYPES

Special job types allow you to send a print job from your computer, then print it from the printer control panel. Select special job types in the print driver, Printing Options tab, under Job Type.

Saved Job

Saved Jobs are documents that are sent to the printer and stored there for future use. All users can print or delete a Saved Job.

At the control panel, from the Print From menu, you can view and print saved jobs. In the Embedded Web Server, in the Jobs window, you can view, print, and delete saved jobs, and you can manage where jobs are stored.

Printing using Saved Job

1. In your software application, access the print settings. For most software applications, press **CTRL+P** for Windows or **CMD+P** for Macintosh.
2. Select your printer, then open the print driver.
   - For Windows, click **Printer Properties**. Depending on your application, the title of the button can vary.
   - For Macintosh, in the Print window, in the print options list, click **Xerox Features**.
3. For Job Type, select **Saved Job**.
   a. Type a job name or select a name from the list.
   b. Type a folder name or select a name from the list.
   c. To add a passcode, click **Private**, type the passcode, then confirm the passcode.
   d. Click **OK**.
4. Select other required printing options.
   - For Windows, click **OK**, then click **Print**.
   - For Macintosh, click **Print**.

Printing, Deleting, Moving, or Copying a Saved Job in the Embedded Web Server

1. At your computer, open a Web browser. In the address field, type the IP address of the printer, then press **Enter** or **Return**.
2. In the Embedded Web Server, click **Home**.
3. Click **Jobs**.
4. Click the **Saved Jobs** tab.

5. For the job that you want to process, select the check box.
6. From the menu, select an option.
   - **Print Job**: This option prints a job immediately.
   - **Delete Job** This option deletes the saved job.
   - **Move Job**: Use this option to move the job to another folder location.
   - **Copy Job**: Use this option to duplicate the job.
7. Click **Go**.

Secure Print

Use Secure Print to print sensitive or confidential information. After you send the job, it is held at the printer until you enter your passcode at the printer control panel.

After a Secure Print job is printed, it is deleted automatically.

Printing using Secure Print

1. In your software application, access the print settings. For most software applications, press **CTRL+P** for Windows or **CMD+P** for Macintosh.
2. Select your printer, then open the print driver.
   - For Windows, click **Printer Properties**. Depending on your application, the title of the button varies.
   - For Macintosh, in the Print window, click **Preview**, then select **Xerox Features**.
3. For Job Type, select **Secure Print**.
4. Type the passcode, confirm the passcode, then click **OK**.
5. Select any other required printing options.
   - For Windows, click **OK**, then click **Print**.
   - For Macintosh, click **Print**.

Releasing a Secure Print Job

1. At the printer control panel, press the **Home** button.
2. Touch **Jobs**.
3. To view Secure Print jobs, touch **Secure Jobs**.
4. Do one of the following:
   - If you submitted a single Secure Print job, touch the folder, then touch the job. Enter the passcode number, then touch **OK**. The job prints automatically.
   - If you submitted multiple Secure Print jobs, touch the folder, enter the passcode number, then touch **OK**. Select an option:
     - To print a single Secure Print job, touch the job required.
     - To print all the jobs in the folder, touch **Print All**.
     - To delete a single Secure Print job, touch the **Trash** icon. At the prompt, touch **Delete**.

- To delete all the jobs in the folder, touch **Delete All**.

Note: After a Secure Print job prints, the printer deletes it automatically.

5. To return to the Home screen, press the **Home** button.

Sample Set

The Sample Set job type prints one copy of a multiple-copy print job before printing the remaining copies. After reviewing the sample set, you can either print the remaining copies or delete them at the printer control panel.

Sample Set is a type of saved job with these features:

- A Sample Set job appears in a folder named after the user ID associated with the print job.
- A Sample Set job does not use a passcode.
- Any user can print or delete a Sample Set job.
- A Sample Set prints one copy of a job to allow you to proofread the job before printing any remaining copies.

After a Sample Set job is printed, it is deleted automatically.

To print a Sample Set, refer to Printing using Sample Set.

Printing using Sample Set

1. In your software application, access the print settings. For most software applications, press **CTRL+P** for Windows or **CMD+P** for Macintosh.
2. Select your printer, then open the print driver.
   - For Windows, click **Printer Properties**. Depending on your application, the title of the button varies.
   - For Macintosh, in the Print window, click **Preview**, then select **Xerox Features**.
3. For Job Type, select **Sample Set**.
4. Select any other required printing options.
   - For Windows, click **OK**, then click **Print**.
   - For Macintosh, click **Print**.

Releasing a Sample Set

1. At the printer control panel, press the **Home** button.
2. To view available jobs, touch **Jobs**.
3. Touch the Sample Set job.

   Note: The Sample Set file description shows the job as Held for Future Printing, and shows the number of remaining copies of the job.

4. Select an option.
   - To print the remaining copies of the job, touch **Release**.
   - To delete the remaining copies of the job, touch **Delete**.
5. To return to the Home screen, press the **Home** button.

MANAGING JOBS USING THE EMBEDDED WEB SERVER

In the Embedded Web Server Active Jobs list, you can view a list of active jobs and delete print jobs. You can use the Embedded Web Server to submit jobs for printing at the device. You can use the Job Submission feature to print .ps, .pdf, .pcl, and .xps files without installing a print driver. You can select jobs for printing from your local computer hard drive, mass storage devices, or a network drive.

Saved jobs are documents sent to the printer and stored there for future use. Any saved jobs appear on the Saved Jobs page. Use the Saved Jobs page to view, print, and delete saved jobs, and create and manage folders in which they are stored.

To manage jobs using the Embedded Web Server:

1. At your computer, open a Web browser. In the address field, type the IP address of the printer, then press **Enter** or **Return**.
2. In the Embedded Web Server, click **Jobs**.
3. Click the job name.
4. From the menu, select an option.
   - To pause the print job, click **Pause**, then click **Go**.
   - To delete the print job, click **Delete**, then click **Go**. At the prompt, click **OK**.
5. To return to the Home screen, click **Home**.

Submitting Jobs for Printing using the Embedded Web Server

1. At your computer, open a Web browser. In the address field, type the IP address of the printer, then press **Enter** or **Return**.
2. In the Embedded Web Server, click **Home**.
3. Click **Print**.
4. For File Name, click **Browse** or **Choose File**, then do one of the following steps.
   - Navigate to the file, then select it.
   - Type the path to the file that you want to select.
5. In the Printing area, for Copies, select **Auto**, or enter the number of copies to print.
6. For Job Type, select an option:
   - **Normal Print**: This option prints a job immediately.
   - **Secure Print**: This option prints a job after you enter your passcode at the printer control panel.
   - **Sample Set** or **Proof Print**: These options print one copy of a multiple-copy print job. The device holds the remaining copies in memory until you release them for printing at the control panel.
   - **Save Job for Reprint:** This option saves a print job in a folder on the print server for future printing. You can specify a job name and folder.
   - **Delay Print:** This option prints a job at a specified time up to 24 hours from the original job submission.
7. As needed, for Paper Selection, select paper size, color, type, and tray.

8. As needed, select job options.
   - 2-Sided Printing
   - Collate
   - Orientation
   - Output Destination

   Note: The available options vary by device.
9. If Accounting is enabled, enter your User ID and Account ID.
10. Click **Submit Job**.

Reprinting Saved Jobs using the Embedded Web Server

1. At your computer, open a Web browser. In the address field, type the IP address of the printer, then press **Enter** or **Return**.
2. In the Embedded Web Server, click **Home**.
3. Click **Jobs**.
4. Click the **Saved Jobs** tab.
5. For the job that you want to process, select the check box.
6. From the menu, select an option.
   - **Print Job**: This option prints a job immediately.
   - **Delete Job** This option deletes the saved job.
   - **Move Job**: Use this option to move the job to another folder location.
   - **Copy Job**: Use this option to duplicate the job.
7. Click **Go**.

Copy

COPY OVERVIEW

To make a copy, the device scans your original documents and temporarily stores the images. It then prints the images based on the options that you selected. You can change settings for individual jobs based on the original documents. You can save settings that you use for regular jobs and retrieve them for later use.

For information about all the Copy App features and available settings, refer to Apps Features.

For details on configuring and customizing the Apps, refer to the *System Administrator Guide* at www.xerox.com/office/VLB415docs.

If authentication or accounting is enabled on your device, to access features, enter your login details. For details about Personalization for logged-in users, refer to Personalize.

MAKING A COPY

To make a copy:

1. Load your original documents.
   - For single pages or paper that cannot be fed using the duplex automatic document feeder, use the document glass. Lift the duplex automatic document feeder, then place the original document face down in the upper-left corner of the document glass.

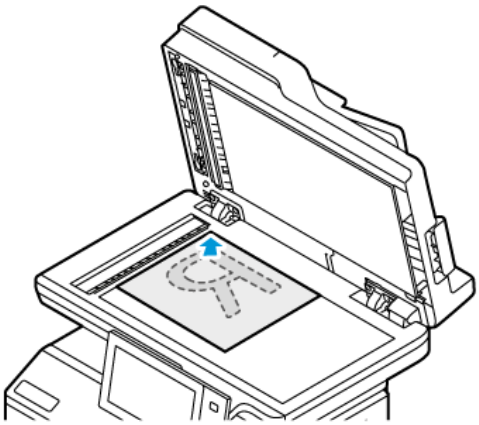

   - For multiple, single, or 2-sided pages, use the duplex automatic document feeder. Remove any staples and paper clips from the pages. Insert the original documents face up in the duplex automatic document feeder with the top of the page entering the feeder first. Adjust the paper guides so that they fit against the original documents.

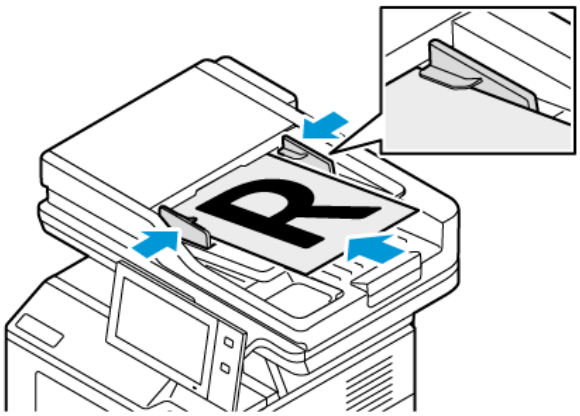

Note:

- When the original documents are detected, the automatic document feeder confirmation indicator LED illuminates.
- If the **Default Screen When Originals Are Detected** feature is configured, when the original documents are detected, the default app is launched automatically.
- If the **Auto Start When Originals Are Detected** feature is enabled, when the original documents are detected, the job starts automatically and the countdown screen is displayed. To stop the countdown and program the job manually, touch **Cancel**.

2. At the printer control panel, press the **Home** button.
3. Touch **Copy**.
4. To clear previous app settings, touch **Reset**.

5. To enter the number of copies needed, use the numeric keypad.
6. Adjust copy settings as needed. If you are scanning from 2-sided original documents, touch **2-Sided Copying**, then select an option.

   For details about available features, refer to Apps Features.
7. Touch **Start**. If you place documents in the feeder, scanning continues until the feeder is empty.
8. For logged-in users, if the Adaptive Learning feature is enabled for Personalization, a suggestion to create a 1-Touch App can appear for repetitive or complex jobs. To create a personalized 1-Touch App, touch **Create 1-Touch App**, then set up the app as required. To decline the suggestion, touch **Cancel**.
   For more information about the Personalization feature and 1-Touch App creation, refer to Personalize.
9. To return to the Home screen, press the **Home** button.

COPY WORKFLOWS

Some features are hidden from view when the Copy App is installed. For details on configuring and customizing the Apps, refer to the *System Administrator Guide* at www.xerox.com/office/VLB415docs.

Erasing the Edges of Copies

You can erase content from the edges of your copies using the Edge Erase feature. You can specify the amount to erase on the right, left, top, and bottom edges.

To erase the edges of copies:

1. At the printer control panel, press the **Home** button.
2. Touch **Copy**.
3. Touch **Edge Erase**.
4. Select one of the following options.
   - **All Edges**: This option erases all four edges by the same amount. To adjust the amount to erase, move the slider.
   - **Individual Edges**: This option allows you to specify different amounts to erase from the edges. Touch the required **Top**, **Bottom**, **Left** or **Right** field. To enter the amount to erase, use the numeric keypad, or touch the arrows.
5. To mirror the same erase amount applied to Side 1 on Side 2, touch the **Mirror Side 1** check box.
6. To select a pre-defined amount of erase, use the **Presets** option.
7. Touch **OK**.

Specifying the Size of the Original

Use the Original Size feature to set a standard or custom size for scanning, or for the printer to determine the original size document automatically. You can use this feature to enable mixed-size original document scanning.

To specify the original size:

1. At the printer control panel, press the **Home** button.

2. Touch **Copy**.
3. Touch **Original Size**.
4. Select an option.
   - **Auto Detect**: This option allows the printer to determine the size of the original document.
   - **Preset Scan Area**: This option specifies the area to scan when it matches a standard paper size. In the scrolling list, touch the desired paper size.
   - **Custom Scan Area**: You can specify the width and length of the area to scan. To specify the original width or length, touch the appropriate field. To enter the size, use the numeric keypad, or use the arrows.
   - **Mixed Size Originals**: You can scan standard-size originals of varying sizes. To determine which original sizes can be mixed in the same job, use the diagram on the screen.
5. Touch **OK**.

Shifting the Image

You can change the placement of an image on the copy page. This is useful if the image is smaller than the page size. For image shift to work correctly, position original documents as follows.

- **Document Feeder**: Position original documents face up, long edge entering the feeder first.
- **Document Glass**: Position original documents face down, in the upper-left corner of the document glass, long edge to the left.

To change the placement of the image:

1. At the printer control panel, press the **Home** button.
2. Touch **Copy**.
3. Touch **Image Shift**.
4. Select one of the following options.
   - **Off**: This option is the default setting.
   - **Auto Center**: This option centers the image on the page.
5. To enter a specific amount of image shift, touch **More**, then touch **Margin Shift**. Touch the required **Up / Down** or **Left / Right** fields. To enter the amount of shift, use the numeric keypad, or touch the arrows.
6. To mirror the same image shift applied to Side 1 on Side 2, touch the **Mirror Side 1** check box.
7. To select a pre-defined amount of shift, use the **Presets** option.
8. Touch **OK**.

Creating a Booklet

The Booklet Creation feature prints two pages on each side of the paper. The printer reorders and reorients the pages so that they are in the correct order and orientation when folded. If more finishing options are available, the pages can be stapled and folded to create a booklet.

To create a booklet:

Note: In this mode, the printer scans all the original documents before it prints the copies.

1. At the printer control panel, press the **Home** button.
2. Touch **Copy**.
3. Touch **Booklet Creation**.
4. Select one of the following options.
   - **Off**: This option is the default setting.
   - **On**: This option enables Booklet Creation.

Note: If Paper Supply is set to Auto Paper Select, the Paper Conflict screen appears. Select the required paper tray, then touch **OK**.

5. To change the **Original Input**, **Paper Supply** or finishing options, touch **More**, then select an option.
   - To scan 1 or 2-sided originals, touch **Original Input**, then select an option.
   - To change the paper source for the booklet, touch **Paper Supply**, then select an option.
6. Touch **OK**.

Adding Covers

You can print the first and last pages of your copy job on different paper, such as colored or heavyweight paper. The printer selects the paper from a different tray. The covers can be blank or printed.

To add covers to your copy job:

1. At the printer control panel, press the **Home** button.
2. Touch **Copy**.
3. Touch **Special Pages > Covers**.

Note: If Paper Supply is set to Auto Paper Select, the Paper Conflict screen appears. Select the required paper tray, then touch **OK**.

4. For Covers Options, select an option.
   - **Front & Back Same**: This option includes front and back covers from the same tray.
   - **Front & Back Different**: This option includes a front and a back cover from different trays.
   - **Front Only**: This option includes a front cover only.
   - **Back Only**: This option includes a back cover only.
5. For Printing Options, select an option.
   - **Blank Cover**: This option inserts a blank cover.
   - **Print on Side 1 Only**: This option prints on the front side of the cover only. To rotate the image on side 2 by 180degrees, touch Rotate Side 2.
   - **Print on Side 2 Only:** This option prints on the back of the cover only. To rotate the image on side 2 by 180degrees, touch Rotate Side 2.
   - **Print on Both Sides**: This option prints on both sides of the cover.
   - **Rotate Side 2**: If covers are 2-Sided, touch this option to rotate the image on side 2 by 180 degrees.

6. For Paper Supply, touch the required tray.
7. Touch **OK**. The options that you selected appear on the Special Pages screen.
8. To edit or delete a special page entry, touch the entry in the list. From the menu, touch the required option.
9. Touch **OK**.

Adding Inserts

You can insert blank pages or pre-printed sheets in specific locations in your copy job. To do this, you specify the tray that contains the inserts.

To add inserts to a copy job:

1. At the printer control panel, press the **Home** button.
2. Touch **Copy**.
3. Touch **Special PagesInserts**.

   Note: If Paper Supply is set to Auto Paper Select, the Paper Conflict screen appears. Select the required paper tray, then touch **OK**.

4. To specify the number of sheets to insert, touch the **Insert Quantity** field. To enter the number of sheets, use the numeric keypad, or use the arrows. Touch **Enter**.
5. To enter a location for the insert, touch the **Insert After Page** entry box. To enter a page number, use the numeric keypad. Touch **Enter**.
6. To specify the paper tray to use for the insert:
   a. Touch **Paper Supply**.
   b. Touch the required paper tray.
   c. Touch **OK**.
7. Touch **Add**. The insert appears in the list on the Inserts screen. To add more inserts, repeat the previous steps.
8. Touch **X.** The options that you selected appear on the Special Pages screen.
9. To edit or delete a special-page entry, touch the entry in the list. From the menu, touch the required option.
10. Touch **OK**.

Specifying Chapter Start Pagination

If you select 2-sided copies, you can set each chapter to start on the front or back of the page. If necessary, the printer leaves one side of the paper blank so that the chapter starts on the specified side of the paper.

To specify chapter start pagination:

1. At the printer control panel, press the **Home** button.
2. Touch **Copy**.
3. Touch **Special Pages > Chapter Starts**.
4. To specify the chapter start page, touch **Page Number**. To enter the page number, use the numeric keypad. Touch **Enter**.

5. For **Start Chapter**, select an option.
   - **On Right Page**: This option specifies the front of the paper.
   - **On Left Page**: This option specifies the back of the paper.
6. Touch **Add.** The page is added to the list on the right side of the screen.
7. To set other pages, repeat the previous steps.
8. Touch **X**. The options that you selected appear on the Special Pages screen.
9. To edit or delete a special-page entry, touch the entry in the list. From the menu, touch the required option.
10. Touch **OK**.

Specifying Exception Pages

You can specify exception pages to print on paper that is loaded in a different paper tray than the paper for the rest of the document. Ensure that the paper you use for the exception pages is the same size as the paper that you use for the rest of the document.

To specify the exception pages:

1. At the printer control panel, press the **Home** button.
2. Touch **Copy**.
3. Touch **Special Pages > Exceptions**.

   Note: If Paper Supply is set to Auto Paper Select, the Paper Conflict screen appears. Select the required paper tray, then touch **OK**.
4. To enter the range of pages to print on different paper:
   - To enter the starting page number, touch the first **Page Number** field. To enter the starting page number, use the numeric keypad. Touch **Enter**.
   - To enter the ending page number, touch the second **Page Number** field. To enter the last page number, use the numeric keypad. Touch **Enter**.

   Note: To specify a single page as an exception, enter that page number as the start and end of the range.
5. To specify the paper to use for the exception pages:
   a. Touch **Paper Supply**.
   b. Touch the tray that contains paper to use for the exception pages.
   c. Touch **OK**.
6. Touch **Add.** The page range is added to the list on the right side of the screen.
7. To set other pages, repeat the previous steps.
8. Touch **X**. The options that you selected appear on the Special Pages screen.
9. To edit or delete a special-page entry, touch the entry in the list. From the menu, touch the required option.
10. Touch **OK**.

Adding Annotations

You can automatically add annotations such as page numbers and the date to your copies.

Note:

- You cannot add annotations to covers, inserts, or blank chapter-start pages.
- If Booklet Creation is selected, you cannot add annotations.

To add annotations:

1. At the printer control panel, press the **Home** button.
2. Touch **Copy**.
3. Touch **Annotations**.
4. To add page numbers:
   a. Touch **Page Number**.
   b. Touch **On**.
   c. Touch the **Starting Page Number** entry box. To enter a page number, use the numeric keypad, then touch **Enter**.
   d. Touch **Apply To**, then select an option.
   e. To position the page number, touch an arrow. The sample page shows the location of the page number.
   f. Touch **OK**.
5. To insert a comment:
   a. Touch **Comment**.
   b. Touch **On**.
   c. For Stored Comments, touch an option in the list.
      - Touch an existing comment.
      - To create a comment, touch an **Available** option. To enter the annotation text, use the touch screen keypad, then touch **OK**.
      - To edit or delete a comment, use the buttons below the Stored Comments list.
   d. Touch **Apply To**, then select an option.
   e. To position the comment, touch an arrow. The sample page shows the location of the comment.
   f. Touch **OK**.
6. To insert the current date:
   a. Touch the desired current date location.
   b. Touch **Date**.
   c. Touch **On**, then touch the date format that you wish to use.
   d. Touch **Apply To**, then select an option.

   e. To position the date in the header or footer, touch an arrow. The sample page shows the location of the date.
   f. Touch **OK**.
7. To insert a Bates Stamp:
   a. Touch **Bates Stamp**.
   b. Touch **On**.
   c. For Stored Prefixes, touch an option in the list.
      - Touch an existing prefix.
      - To create a prefix, touch an **Available** option. To enter text, use the touch keypad, then touch **OK**.
      - To edit or delete a prefix, use the buttons below the Stored Prefixes list.
   d. Touch **Starting Page Number**. To enter the starting page number, use the alphanumeric keypad. You can use leading zeros to indicate the number of digits required. Touch **Enter**.
   e. Touch **Apply To**, then select an option.
   f. To position the Bates Stamp in the header or footer, touch an arrow. The sample page shows the location of the Bates Stamp.
   g. Touch **OK**.
8. To change the text formatting, touch **Format & Style**, choose the required settings, then touch **OK**.
9. To remove all entered annotations, touch **Delete All**.
10. Touch **OK**.

Changing the Page Layout

You can use Page Layout to place a defined number of pages on one or both sides of the paper.

To change the page layout:

1. At the printer control panel, press the **Home** button.
2. Touch **Copy**.
3. Touch **Page Layout**.
4. Select one of the following options.
   - **Pages per Side**: This option places a defined number of pages on one or both sides of the paper. Select the required number of pages per side.
   - **Repeat Image**: This option places a defined number of the same image on one or both sides of the paper. Select the number of images required. Auto Repeat allows the printer to determine the maximum number of images that can fit on the currently selected paper size.
5. To enter a specific number of rows and columns, touch **Specify Rows & Columns**. Touch the **Rows** or **Columns** field. To enter the number of rows and columns, use the numeric keypad, or touch the arrows. To rotate the paper, select the check box for Rotate Background.
6. To change the original orientation, touch **Original Orientation**. Select **Portrait** or **Landscape**.
7. Touch **OK**.

Printing a Sample Job

Sample Job allows you to print a test copy of a job to inspect before printing multiple copies. This feature is useful for complex or high-volume jobs. After you print and inspect the test copy, you can choose to print or cancel the remaining copies.

To print a sample copy of your job:

1. At the printer control panel, press the **Home** button.
2. Touch **Copy**.
3. Adjust the copy settings as needed.
4. Enter the number of copies needed.
5. Touch the **Sample Job** toggle button.
6. Touch the **Start** button. The sample job prints.
7. Inspect the sample job, then select one of the following options:
   - If the copy is unsatisfactory, touch **Delete**. Touch **Delete** to confirm. The job is canceled and no more copies are printed.
   - If the copy is satisfactory, touch **Print**. The remaining copies are printed.
8. To return to the home screen, press the **Home** button.

Saving Current Copy Settings

To use a particular combination of copy settings for future copy jobs, you can save the settings with a name and retrieve them for later use.

To save the current copy settings:

1. At the printer control panel, press the **Home** button.
2. Touch **Copy**.
3. Change the settings required.
4. Touch **Save Current Settings**.
5. To create a new saved setting, touch any option labeled **<Available>**.
6. Enter a name for the saved setting using the touch screen keyboard, then touch **OK**.

Retrieving Saved Copy Settings

You can retrieve and use any previously saved copy settings for current jobs.

Note: To save the copy settings with a name, refer to Saving Current Copy Settings.

To retrieve saved settings:

1. At the printer control panel, press the **Home** button.
2. Touch **Copy**.
3. Touch **Retrieve Saved Settings**.

4. Touch the saved setting required.

   Note: To delete a saved setting, touch the setting, then touch **Delete Settings**. Touch **Delete** to confirm.

5. Touch **OK**. The saved settings are loaded for the current copy job.

ID Card Copy

ID CARD COPY OVERVIEW

You can use the ID Card Copy App to copy both sides of an ID card or small document onto one side of paper. To copy the card properly, place each side in the upper-left corner of the document glass. The printer stores both sides of the document, then prints them side by side on the paper.

The ID Card Copy App is hidden from view on initial device setup. For details about configuring and customizing the Apps, refer to the *System Administrator Guide* at www.xerox.com/office/VLB415docs.

For information about all the ID Card Copy App features and available settings, refer to Apps Features.

If authentication or accounting is enabled on your device, to access features, enter your login details. For details about Personalization for logged-in users, refer to Personalize.

COPYING AN ID CARD

To copy an ID card:

1. Lift the document feeder, then place the original document in the upper-left corner of the document glass.
2. At the printer control panel, press the **Home** button.
3. Touch **ID Card Copy**.
4. To clear previous App settings, touch **Reset**.
5. Adjust the settings as required.
6. Touch **Scan Front**.
7. When scanning is finished, lift the document feeder. Place the second side of the original document in the upper-left corner of the document glass.
8. To scan the second side of the original document and print the copies, touch **Scan Back**.
9. To return to the home screen, press the **Home** button.

Email

EMAIL OVERVIEW

You can use the Email App to scan images and attach them to emails. You can specify the file name and format of the attachment, and include a subject heading and message for the email.

Note: The system administrator must set up this feature before you can use it. For details, refer to the *System Administrator Guide* at www.xerox.com/office/VLB415docs.

For information about all the Email App features and available settings, refer to Apps Features.

For details on configuring and customizing the Apps, refer to the *System Administrator Guide* at www.xerox.com/office/VLB415docs.

If authentication or accounting is enabled on your device, to access features, enter your login details. For details about Personalization for logged-in users, refer to Personalize.

SENDING A SCANNED IMAGE IN AN EMAIL

To send a scanned image in an email:

1. Load your original documents.
   - For single pages or paper that cannot be fed using the duplex automatic document feeder, use the document glass. Lift the duplex automatic document feeder, then place the original document face down in the upper-left corner of the document glass.

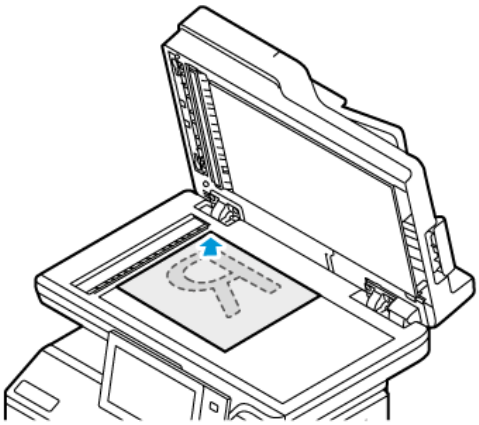

   - For multiple, single, or 2-sided pages, use the duplex automatic document feeder. Remove all staples and paper clips from the pages. Insert the original documents face up in the duplex automatic document feeder with the top of the page entering the feeder first. Adjust the paper guides so that they fit against the original documents.

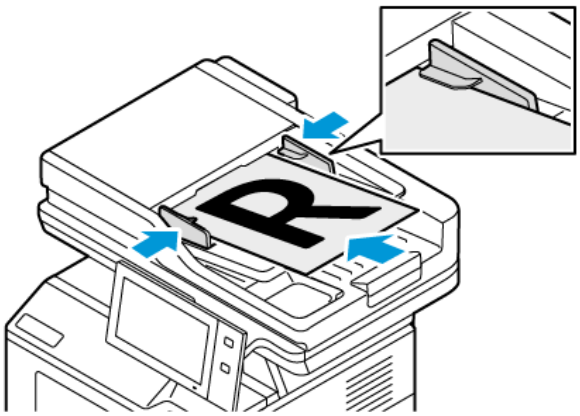

Note:

- When the original documents are detected, the automatic document feeder confirmation indicator LED illuminates.
- If the **Default Screen When Originals Are Detected** feature is configured, when the original documents are detected, the default app is launched automatically.
- If the **Auto Start When Originals Are Detected** feature is enabled, when the original documents are detected, the job starts automatically and the countdown screen is displayed. To stop the countdown and program the job manually, touch **Cancel**.

2. At the printer control panel, press the **Home** button.
3. Touch **Email**.
4. To clear previous app settings, touch **Reset**.

5. Enter recipients.
   - If the entry screen appears, to enter a recipient, touch an option, or touch **X**.
   - To select a contact or group from the Address Book, touch **Device Address Book**. Touch **Favorites** or **Contacts**, then select a recipient. Touch **OK**.
   - To select a contact from the Network Address Book, touch **Network Address Book**. Enter a name, touch **Search**, then select a recipient. Touch **OK**.
   - To enter the email address manually, touch **Manual Entry**. In the Enter Email Address field, enter the email address, then touch **Add**.
   - To add your own email address to the recipient list, touch **Add Me**. If necessary, enter your login details.
   - To add more recipients, touch **Add Recipient**, then repeat the procedure.

   Note: The choices available for adding recipients depend on system configuration.

6. To organize the recipients, touch one of the recipient names on the list. From the menu, select **To:**, **Cc:**, or **Bcc:**.
7. Adjust the email settings as needed.
   - To change the subject, touch **Subject**, enter a new subject, then touch **OK**.
   - To save the scanned document as a specific file name, touch the attachment file name, enter a new name, then touch **OK**.
   - To save the scanned document as a specific file format, touch the attachment file format, then select the required format. To create a searchable file or to add password protection, from the file format menu, select **More**.
   - To change the email message, touch **Message**, enter a new message, then touch **OK**.
   - To scan more documents using the document glass, or to change settings for different sections of the job, touch **Build Job**.
   - If you are scanning from 2-sided original documents, touch **2-Sided Scanning**, then select an option.

   For details about available features, refer to Apps Features.

8. To start the scan, touch **Send**.
9. If Build Job is enabled, touch **Scan**, then, when prompted, do these steps.
   - To change settings, touch **Program Next Segment**.
   - To scan another page, touch **Scan Next Segment**.
   - To finish, touch **Submit**.
10. For logged-in users, if the Adaptive Learning feature is enabled for Personalization, a suggestion to create a 1–Touch App can appear for repetitive or complex jobs. To create a personalized 1–Touch App, touch **Create 1–Touch App**, then set up the app as required. To decline the suggestion, touch **Cancel**.
    For more information about the Personalization feature, and 1–Touch App creation, refer to Personalize.
11. To return to the Home screen, press the **Home** button.

ADDING OR EDITING CONTACTS IN THE DEVICE ADDRESS BOOK FROM THE CONTROL PANEL

You can set up the Device Address Book using the Embedded Web Server. The Address Book can contain up to 5000 contacts that you can access when you enter recipients or destinations using apps.

To add or edit contacts in the Device Address Book from the control panel:

Note: Before you can use this feature, the system administrator must enable Create/Edit Contact from Touch Screen for All Users.

1. Load your original documents.
2. At the printer control panel, press the **Home** button.
3. Touch **Email**.
4. To clear previous App settings, touch **Reset**.
5. Touch **Manual Entry**. To enter an email address, use the touch screen keypad.
6. To add the recipient to the Device Address Book, touch the **Address Book** icon.
7. Do one of the following steps.
   - To create an entry, touch **Create New Contact**. To enter contact details, touch a field, then use the touch screen keypad. Touch **OK**.
   - To add to an existing entry, touch **Add to Existing Contact**. In the list, touch a contact. To find a contact, touch **Search**.
8. To mark a recipient to appear as a favorite option, touch the **Star** icon.
9. Adjust the email settings as needed.
10. To start the scan, touch **Send**.
11. To return to the Home screen, press the **Home** button.

Workflow Scanning

WORKFLOW SCANNING OVERVIEW

The Workflow Scanning App allows you to scan an original document, distribute, and archive the scanned image file. The Workflow Scanning feature simplifies the task of scanning many multi-page documents and saving the scanned image files in one or more file locations.

Note: The system administrator must set up this feature before you can use it. For details, refer to the *System Administrator Guide* at www.xerox.com/office/VLB415docs.

The Workflow Scanning App enables you to scan documents using pre-defined settings to a range of file destinations quickly and easily. There are several workflow options:

- Distribution workflows enable you to scan documents to one or more file destinations. File destinations include an FTP site, a website, and a network server. You can add fax destinations to workflows too.
- Scan to Mailbox enables you to scan documents to public or private mailbox folders on the printer.
- Scan to Home enables you to scan documents to a personal Home folder on your network.
- Scan to USB enables you to scan documents to a connected USB flash drive.

Note:

- To scan original documents to a file destination associated with a contact in the address book, refer to Scan To.
- To scan original documents to an email address, refer to Email.

For information about all the Workflow Scanning App features and available settings, refer to Apps Features.

For details on configuring and customizing the Apps, refer to the *System Administrator Guide* at www.xerox.com/office/VLB415docs.

If authentication or accounting is enabled on your device, to access features, enter your login details. For details about Personalization for logged-in users, refer to Personalize.

USING WORKFLOW SCANNING

To scan an original document:

1. Load your original documents.
   - For single pages or paper that cannot be fed using the duplex automatic document feeder, use the document glass. Lift the duplex automatic document feeder, then place the original document face down in the upper-left corner of the document glass.

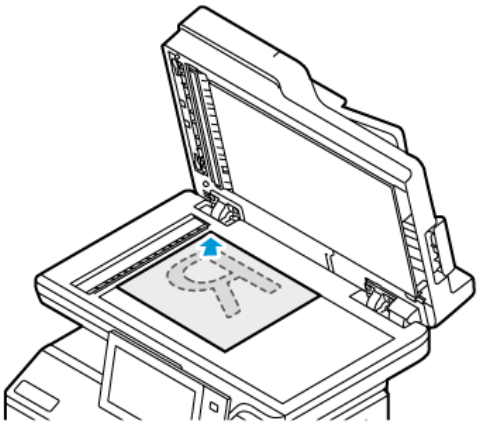

   - For multiple, single, or 2-sided pages, use the duplex automatic document feeder. Remove any staples and paper clips from the pages. Insert the original documents face up in the duplex automatic document feeder with the top of the page entering the feeder first. Adjust the paper guides so that they fit against the original documents.

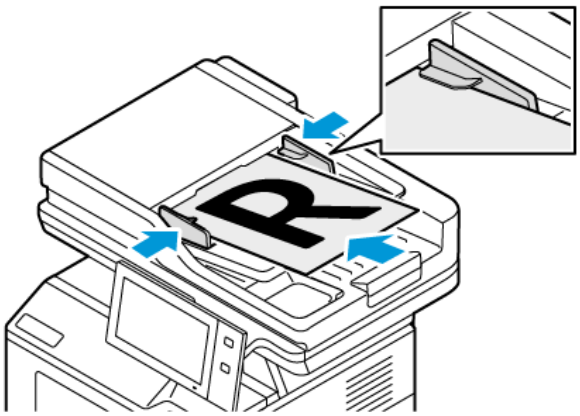

Note: When the original documents are detected, the automatic document feeder confirmation indicator LED illuminates.

2. At the printer control panel, press the **Home** button.
3. Touch **Workflow Scanning**.
4. To clear previous app settings, touch **Reset**.
5. To select a workflow, from the Pick a Workflow screen, touch an option. If necessary, to refresh the workflow list, touch **Update**.

Note: If the Pick a Workflow screen does not appear automatically, to display the screen, touch **Change Workflow**.

6. If needed, enter recipients, workflow destination details, or browse to the location required for the scanned documents.

7. To add a file destination, touch **Add File Destinations**. From the list, select a file destination.

   Note: You can add file destinations to a workflow from the predefined list of file repository settings.

   - In the Embedded Web Server, to create a new workflow, you can add file destinations from the predefined list.
   - In the Workflow Scanning App, for a selected workflow, you can add more file destinations from the predefined list.

   For details, refer to the *System Administrator Guide* at www.xerox.com/office/VLB415docs.

8. Adjust the workflow scanning settings as needed.
   - To save the scanned document with a specific file name, touch the attachment file name, enter a new name, then touch **OK**.
   - To save the scanned document as a specific file format, touch the attachment file format, then select the required format.
   - To define what action the device takes when the filename is used already, touch **If File Already Exists**. Select an option, then touch **OK**.

   Note: If the Add to pdf folder option is not available, access the Embedded Web Server, then enable the Filing Option settings. For details, refer to the *System Administrator Guide* at www.xerox.com/office/VLB415docs.

   - If you are using the document glass, to combine pages into a single scan file, enable the Build Job feature. To enable the feature, touch the toggle button for **Build Job**.
   - If you are scanning from 2-sided original documents, touch **2-Sided Scanning**, then select an option.

   For details about available features, refer to Apps Features.

9. To start the scan, touch **Scan**.
10. If Build Job is enabled, when prompted, do these steps:
    - To change settings, touch **Program Next Segment**.
    - To scan another page, touch **Scan Next Segment**.
    - To finish, touch **Submit**.
11. To return to the Home screen, press the **Home** button.

    Note:

    - For remote scanning, a network connection is required.
    - For details about remote scanning, refer to the Help in the Embedded Web Server.
    - Print, copy, and fax jobs can print while you are scanning original documents or downloading files from the printer.

Distribution Workflows

Distribution Workflows are customized workflows used in the Workflow Scanning App. A workflow contains pre-programmed settings for a scan job that specify how and where scanned documents are distributed. A workflow

can include one or more file destinations, as well as fax destinations. You can store customized scan settings in each workflow.

Using the Embedded Web Server, you can create a workflow using one or more scan destinations. The following options are available:

- Predefined scan destinations from the list of file repositories.
- New scan destinations such as an FTP site, a website, or an SMB server.
- Fax number destinations.

When you create a workflow, it appears in the list of workflows in the Pick a Workflow screen of the Workflow Scanning App.

At the printer control panel, when you select a workflow, you can change the scan settings and add more scan destinations from the predefined list.

Predefined Network File Repositories

A file repository is a predefined file destination that you can use in a workflow. You can use the printer control panel to add a file repository to a workflow.

The system administrator configures the file repositories available as predefined scanned file destinations. At least one repository must be set up for the Workflow Scanning feature to be available. For details, refer to the *System Administrator Guide* at www.xerox.com/office/VLB415docs.

Note: On the Pick a Workflow screen, the DEFAULT workflow is associated with the default file repository.

Creating a New Workflow

1. At your computer, open a Web browser, in the address field, type the IP address of the printer, then press **Enter** or **Return**.

   Note: For details about obtaining the IP address of your printer, refer to Finding the IP Address of Your Printer.

2. Click the **Scan** tab.
3. In the Display area, select **Workflows**, then select **Create New Workflow**.
4. For Add Destination to Workflow, select an option:
   - To add an existing file destination to the workflow, select **Select from a Predefined List**.
   - To add a file destination to the workflow, select **Enter a Scan Destination**.
   - To add a fax destination to the workflow, select **Enter a Server Fax Number**.
5. For Select from a Predefined List, select a destination from the File Destination list, then click **Add**.
6. For Enter a Scan Destination, add these details:
   a. Click the **Friendly Name** field, then enter a name for the scan destination.
   b. For Protocol, select an option, then enter the destination address.
      - For IP Address, enter the IP Address: Port number.
      - For Host Name, enter the Host Name: Port number.
   c. Enter the name of the destination folder as needed. In SMB, the destination folder is the shared folder.

d. In Document Path, enter the name of the subfolder within the destination folder. Select a Filing Policy.

e. Enter a valid login name and password.

Note: Use the login name for the computer that holds the destination folder. The login name can include the domain name, such as domain name\login name.

7. Click **Add**.
8. To add another destination to the workflow:
   - To add a file destination, for File Destinations, click **Add**.
   - To add a fax destination, for Fax Destinations, click **Add**.
9. Set the scan settings for the workflow as required.

After a workflow is created in the Embedded Web Server, the workflow is added to the list in the Workflow Scanning App.

Scanning to a Shared Network Folder

You can scan to a shared folder on a network using SMB. The folder can be on a server or computer running SMB services.

To scan to a shared network folder, create a shared folder with read and write access privileges.

Sharing a Folder on a Windows Computer

1. Open Windows Explorer.
2. Right-click the folder you want to share, then select **Properties**.
3. Click the **Sharing** tab, then click **Advanced Sharing**.
4. Select **Share this folder**.
5. Click **Permissions**.
6. Select the **Everyone** group, then verify that all permissions are enabled.
7. Click **OK**.

   Note: Remember the Share name for later use.

8. Click **OK** again.
9. Click **Close**.

Sharing a Folder in Macintosh OS X Version 10.7 and Later

1. From the Apple menu, select **System Preferences**.
2. From the System Preferences window, select **Sharing**, then select **File Sharing**.
3. Under Shared Folders, click the Plus icon (**+**). Browse to the folder that you want to share on the network, then click **Add**.
4. To modify access rights for your folder, select the folder. The groups activate.
5. From the Users list, click **Everyone**, then use the arrows to select **Read & Write**.

6. Click **Options**, then select a share-folder option.
   - To share the folder, select **Share files and folders using SMB**.
   - To share the folder with specific users, next to the user name, select **On**.
7. Click **Done**.
8. Close the System Preferences window.

Note: When you open a shared folder, a Shared Folder banner appears in the Finder for the folder and subfolders.

Scanning to a Mailbox Folder

Scanning to a folder is the simplest scanning method. This function allows users to scan files to mailboxes, which are folders created on the printer. When you scan an image at the printer, the scan file is stored in a folder on the printer. You can use the Embedded Web Server to retrieve the stored scan file to save to your computer.

The default settings create a 1-sided, color, portable document format **.pdf** file. You can change the default settings using the printer control panel, or using the Embedded Web Server at your computer. Control panel selections override the settings in the Embedded Web Server.

Scanning to the Public Mailbox Folder

The printer provides a public mailbox folder to store scanned images. You do not need a password to scan images to the public mailbox folder, or to retrieve the scanned images. All users can view scanned documents in the public mailbox folder. You can create a password-protected private mailbox folder. For details, refer to Creating a Private Mailbox Folder.

To scan an image to the public mailbox folder:

1. Load your original documents.
2. At the printer control panel, press the **Home** button.
3. Touch **Workflow Scanning**.
4. To select a workflow, from the Pick a Workflow screen, touch **Default Public Mailbox**.

   Note: If the Pick a Workflow screen is not automatically displayed, to display it, touch **Change Workflow**.
5. To add a file destination, touch **Add File Destinations**, then select a file destination from the list.
6. Adjust the workflow scanning settings as needed.
   - To save the scanned document as a specific file name, touch the attachment file name, enter a new name, then touch **OK**.
   - To save the scanned document as a specific file format, touch the attachment file format, then select the required format.
   - If you are using the document glass, to combine pages into a single scan file, enable **Build Job**.
   - If you are scanning from 2-sided original documents, touch **2-Sided Scanning**, then select an option.

   For details about available features, refer to Apps Features.
7. To start the scan, touch **Scan**. The Job Progress screen appears, and the original document is scanned. The printer stores the scanned image on the printer.

8. If Build Job is enabled, when prompted, do these steps.
   - To change settings, touch **Program Next Segment**.
   - To scan another page, touch **Scan Next Segment**.
   - To finish, touch **Submit**.
9. To move the file to your computer, use the Embedded Web Server. For details, refer to Retrieving Scan Files from a Mailbox Folder.

Scanning to a Private Mailbox Folder

This feature allows you to scan documents to a private mailbox folder. Private mailbox folders can require a password.

You can use the Embedded Web Server to create your private mailbox folders. For details, refer to Creating a Private Mailbox Folder.

To scan to a private mailbox folder:

1. Load your original documents.
2. At the printer control panel, press the **Home** button.
3. Touch **Workflow Scanning**.
4. To select a workflow, from the Pick a Workflow screen, select a private mailbox folder.

   Note: If the Pick a Workflow screen is not automatically displayed, to display it, touch **Change Workflow**.
5. On the Mailbox Password screen, enter the password, then touch **OK**.
6. To add a file destination, touch **Add File Destinations**, then select a file destination from the list.
7. Adjust the workflow scanning settings as needed.
   - To save the scanned document as a specific file name, touch the attachment file name, enter a new name, then touch **OK**.
   - To save the scanned document as a specific file format, touch the attachment file format, then select the required format.
   - If you are using the document glass, to combine pages into a single scan file, enable **Build Job**.
   - If you are scanning from 2-sided original documents, touch **2-Sided Scanning**, then select an option.

   For details about available features, refer to Apps Features.
8. To start the scan, touch **Scan**.
9. If Build Job is enabled, when prompted, do these steps:
   - To change settings, touch **Program Next Segment**.
   - To scan another page, touch **Scan Next Segment**.
   - To finish, touch **Submit**.
10. To move the file to your computer, use the Embedded Web Server. For details, refer to Retrieving Scan Files from a Mailbox Folder.

Creating a Private Mailbox Folder

If the scan policy to allow additional folders is enabled, you can create a private mailbox folder. The system administrator can create a private mailbox folder at any time. For details, refer to the *System Administrator Guide* at www.xerox.com/office/VLB415docs.

To create a private mailbox folder with a password:

1. At your computer, open a Web browser, in the address field, type the IP address of the printer, then press **Enter** or **Return**.

   Note: For details about obtaining the IP address of your printer, refer to Finding the IP Address of Your Printer.

2. Click the **Scan** tab.
3. In the Display section, select **Mailboxes**.

   Note: If the Display section does not appear, Scan to Mailbox is not enabled. For details, refer to the *System Administrator Guide* at www.xerox.com/office/VLB415docs.

4. In the Scan to Mailbox section, click **Create Folder**.
5. Click the **Folder Name:** field, then type a name for the folder.
6. In the Folder Password field, type a password that adheres to the password rules.
7. In the Confirm Folder Password field, type the password again.
8. Click **Apply**.

Your private mailbox folder appears in the mailbox folder list in the Embedded Web Server and on the printer touch screen under Pick a Workflow. The contents are stored on the printer.

Retrieving Scan Files from a Mailbox Folder

You can use the Embedded Web Server to retrieve scan files from a mailbox folder and copy the files to your computer.

To retrieve your scan files:

1. At your computer, open a Web browser, in the address field, type the IP address of the printer, then press **Enter** or **Return**.

   Note: For details about obtaining the IP address of your printer, refer to Finding the IP Address of Your Printer.

2. Click the **Scan** tab.
3. In the Display section, select **Mailboxes**.
4. In the Scan to Mailbox section, click the folder containing the scan.

   Note:

   - For a password protected private folder, click the **Folder Password** field, type the password, then click **OK**.
   - If your image file does not appear, click **Update View**.

   Your scan file appears in the Folder Contents window.

5. Under Action, select an option, then click **Go**.
   - **Download** saves a copy of the file to your computer. When prompted, click **Save**, then navigate to the location on your computer to save the file. Open the file or close the dialog box.
   - **Reprint** prints the file without saving a copy of the file to your computer.
   - **Delete** removes the file from the mailbox. When prompted, click **OK** to delete the file or **Cancel** to cancel the operation.

Note: You can also print a mailbox file using the Print From App. For details, refer to Print From.

Scanning to a User Home Folder

Scan to Home allows you to scan documents to a home directory on an external server. The home directory is distinct for each authenticated user. The directory path is established through LDAP.

The Scan to Home feature is available as the Home workflow in the Workflow Scanning App.

To enable the Home workflow:

- Ensure that LDAP Network Authentication is configured.
- Ensure that Home folder locations are defined for each user in the LDAP directory.

Note: When a user logs in to the printer using network credentials, the Home workflow appears on the Pick a Workflow screen.

To use the Home workflow:

1. Load your original documents.
2. To log in to the printer, touch **Log In**, then log in with your network credentials.
3. At the printer control panel, press the **Home** button.
4. Touch **Workflow Scanning**.
5. From the Pick a Workflow screen, touch the **Home** workflow.

   Note:

   - If the Pick a Workflow screen is not automatically displayed, to display it, touch **Change Workflow**.
   - If the Home workflow is not displayed, check that you have logged in with the required credentials.
6. To add a file destination, touch **Add File Destinations**, then select a file destination from the list.
7. Adjust the workflow scanning settings as needed.
   - To save the scanned document as a specific file name, touch the attachment file name, enter a new name, then touch **OK**.
   - To save the scanned document as a specific file format, touch the attachment file format, then select the required format.
   - If you are using the document glass, to combine pages into a single scan file, enable **Build Job**.
   - If you are scanning from 2-sided original documents, touch **2-Sided Scanning**, then select an option.

   For details about available features, refer to Apps Features.

8. To start the scan, touch **Scan**.
9. If Build Job is enabled, when prompted, do these steps.
   - To change settings, touch **Program Next Segment**.
   - To scan another page, touch **Scan Next Segment**.
   - To finish, touch **Submit**.
10. To return to the Home screen, press the **Home** button.

Scanning to a USB Flash Drive

You can scan a document and store the scanned file on a USB Flash drive. The Scan to USB function produces scans in **.jpg**, **.pdf**, **.pdf (a)**, **.xps**, and **.tif** file formats.

The Scan to USB feature is available as the USB workflow in the Workflow Scanning App.

Note: Only USB Flash drives formatted to the typical FAT32 file system are supported.

To scan to a USB Flash drive:

1. Load your original documents.
2. At the printer control panel, press the **Home** button.
3. Insert the USB Flash drive into the USB memory port.
4. At the USB Drive Detected screen, touch **Scan to USB**.

   Note: If the USB Flash drive is inserted in the printer already, touch **Workflow Scanning**. Touch **Change Workflow**, then touch **USB**.
5. To add a file destination, touch **Add File Destinations**, then select a file destination from the list.
6. Adjust the workflow scanning settings as needed.
   - To save the scanned document as a specific file name, touch the attachment file name, enter a new name, then touch **OK**.
   - To save the scanned document as a specific file format, touch the attachment file format, then select the required format.
   - If you are using the document glass, to combine pages into a single scan file, enable **Build Job**.
   - If you are scanning from 2-sided original documents, touch **2-Sided Scanning**, then select an option.

   For details about available features, refer to Apps Features.
7. To start the scan, touch **Scan**.

8. If Build Job is enabled, when prompted, do these steps.
   - To change settings, touch **Program Next Segment**.
   - To scan another page, touch **Scan Next Segment**.
   - To finish, touch **Submit**.

> **Caution:** Do not remove the USB Flash drive while the printer is processing the scan job. If you remove the Flash drive before the transfer is complete, the file can become unusable and other files on the drive can be damaged.

9. To return to the Home screen, press the **Home** button.

Single-Touch Apps

A Single-Touch App enables you to use a workflow without having to use the Workflow Scanning App. Single-Touch Apps are displayed on the Home screen, and used with a single touch.

You can use the Embedded Web Server to design the app, associate it with a workflow, and assign user rights. For details about creating Single-Touch Apps for workflow scanning destinations, refer to the *System Administrator Guide* at www.xerox.com/office/VLB415docs.

Scan To

SCAN TO OVERVIEW

You can use the Scan To App to scan documents to multiple destinations and recipients in a single scan. A Scan To destination can be an email address, a USB flash drive, an SMB network location, or another remote destination. A Scan To recipient can be a contact in the device address book or network address book, an email address, or the logged-in user.

The Scan To App supports the following scanning functions:

- Scan original documents to an email address. For details, refer to Scanning to an Email Address.
- Scan original documents to a USB flash drive. For details, refer to Scanning to a USB Flash Drive.
- Scan original documents to the email address associated with the logged-in user. For details, refer to Scanning to the Logged-In User.
- Scan original documents to remote destinations. For details, refer to Scanning to Remote Destinations.

To scan documents to one or more file destinations using customized workflows, refer to Workflow Scanning.

For information about all the Scan To App features and available settings, refer to Apps Features.

For details on configuring and customizing the Apps, refer to the *System Administrator Guide* at www.xerox.com/office/VLB415docs.

If authentication or accounting is enabled on your device, to access features, enter your login details. For details about Personalization for logged-in users, refer to Personalize.

SCANNING TO AN EMAIL ADDRESS

You can scan a document and send the scanned file to an email address. The Scan To App produces scans in **.jpg**, **.pdf**, **.pdf (a)**, **.xps**, and **.tif** file formats.

Before you scan to an email address, ensure that you configure the printer with the email server information. For details, refer to the *System Administrator Guide* at www.xerox.com/office/VLB415docs.

To scan an image and send it to an email address:

1. Load the original document on the document glass or into the automatic document feeder.

Note:

- When the original documents are detected, the automatic document feeder confirmation indicator LED illuminates.
- If the **Default Screen When Originals Are Detected** feature is configured, when the original documents are detected, the default app is launched automatically.
- If the **Auto Start When Originals Are Detected** feature is enabled, when the original documents are detected, the job starts automatically and the countdown screen is displayed. To stop the countdown and program the job manually, touch **Cancel**.

2. At the control panel, touch **Home**.
3. Touch **Scan To**.
4. If the Scan To destination window does not appear, touch **Add Destination**.
5. Add recipients.
   - To enter the email address manually, touch **Email**. Enter an email address, then touch **Add**.
   - To select a contact or group from the Device Address Book, touch **Device Address Book**. Touch **Favorites** or **Contacts**, then select a recipient.
   - To select a contact or group from the Network Address Book, touch **Network Address Book**. In the search bar, type the name of the contact or group that you want to add, then touch **Search**. From the list of results, select a recipient.

   Note: For details about using the Address Book and managing and creating Favorites, refer to the *System Administrator Guide* at www.xerox.com/office/VLB415docs.
6. To add another Scan To destination, touch **Add Destination**, then select the required destination.
7. To save the scanned document as a specific filename, touch the attachment filename, then enter a new name using the touch screen keypad. Touch **Enter**.
8. To save the scanned document as a specific file format, touch the attachment file format, then select the required format.

   Note: To make scanned documents searchable, your system administrator can enable the Searchable feature.
9. Adjust scanning options as needed.
   - To change the email subject line, touch **Subject**. Enter a new subject line using the touch screen keypad, then touch **Enter**.
   - To change the email body message, touch **Message**. Enter a new message, then touch **OK**.
   - To scan multiple pages using the document glass, or to change settings for different sections of the job, touch **Build Job**.
10. To begin the scan, touch **Scan**.
11. If Build Job is enabled, when prompted, do these steps.
    - To change settings for the next segment of the document, touch **Program Segment**.
    - To scan another page, load the new document onto the document glass, then touch **Scan Segment**.
    - To finish, touch **Submit**.
12. For logged-in users, if the Adaptive Learning feature is enabled for Personalization, a suggestion to create a 1–Touch App can appear for repetitive or complex jobs. To create a personalized 1–Touch App, touch **Create 1–Touch App**, then set up the app as required. To decline the suggestion, touch **Cancel**.
    For more information about the Personalization feature, and 1–Touch App creation, refer to Personalize.
13. To return to the Home screen, press the **Home** button.

SCANNING TO A USB FLASH DRIVE

You can scan a document and store the scanned file on a USB Flash drive. The Scan To App produces scans in **.jpg**, **.pdf**, **.pdf (a)**, **.xps**, and **.tif** file formats.

Note: Only USB Flash drives formatted to the typical FAT32 file system are supported.

To scan to a USB Flash drive:

1. Load the original document on the document glass or in the automatic document feeder.
2. At the printer control panel, press the **Home** button.
3. Touch **Scan To**.
4. If the Scan To destination window does not appear, touch **Add Destination**.
5. Insert your USB Flash drive into the USB port on the front of the printer, then touch **USB**.

   Note: If you select **USB** as the Scan To destination before inserting a USB Flash drive, you will be prompted to insert it.
6. To add another Scan To destination, touch **Add Destination**, then select the required destination.
7. To save the scanned document as a specific file name, touch the attachment file name, then enter a new name using the touch screen keypad. Touch **Enter**.
8. To save the scanned document as a specific file format, touch the attachment file format, then select the required format.
9. Adjust scanning features as needed.
10. To scan multiple pages using the document glass, or to change settings for different sections of the job, touch **Build Job**.
11. To begin the scan, press **Scan**.
12. If Build Job is enabled, when prompted, do these steps.
    - To change settings for the next segment of the document, touch **Program Segment**.
    - To scan another page, load the new page onto the document glass, then touch **Scan Segment**.
    - To finish, touch **Submit**.

    The printer scans your images to the root folder of the USB Flash drive.
13. If you are scanning from the document glass, when prompted, to finish, touch **Done** or to scan another page, touch **Add Page**.

    Note: If you are scanning a document from the automatic document feeder, a prompt does not appear.

> **Warning:** Do not remove the USB Flash drive while the device is scanning and processing the job. If you remove the Flash drive before the transfer is complete, the file can become unusable and other files on the drive can be damaged.

14. To return to the Home screen, press the **Home** button.

SCANNING TO THE LOGGED-IN USER

You can use the Add Me function to scan a document and send the scanned file to the email address associated with a logged-in user.

Note: Only users authenticated through an LDAP server can have an associated email address.

Before scanning to a logged-in user, ensure that LDAP user authentication is configured. For details, refer to the *System Administrator Guide* at www.xerox.com/office/VLB415docs.

The Scan To App produces scans in **.jpg**, **.pdf**, **.pdf (a)**, **.xps**, and **.tif** file formats.

To scan an image and send it to the email address of the logged-in user:

1. Load the original document on the document glass or into the automatic document feeder.
2. At the control panel, touch **Home**.
3. Touch **Scan To**.
4. If the Scan To destination window does not appear, touch **Add Destination**.
5. Touch **Add Me**.
6. If you are not logged in, a login screen appears. Enter your LDAP network user name and password, then touch **Done**.
7. To add another Scan To destination, touch **Add Destination**, then select the required destination.
8. To save the scanned document with a specific file name, touch the attachment file name, then enter a new name using the touch screen keypad. Touch **Enter**.
9. To save the scanned document as a specific file format, touch the attachment file format, then select the required format.

   Note: To make scanned documents searchable, your system administrator can enable the Searchable feature.

10. Adjust scanning options as needed.
11. To scan multiple pages using the document glass, or to change settings for different sections of the job, touch **Build Job**.
12. To begin the scan, touch **Scan**.
13. If Build Job is enabled, when prompted, do these steps.
    - To change settings for the next segment of the document, touch **Program Segment**.
    - To scan another page, load the new document onto the document glass, then touch **Scan Segment**.
    - To finish, touch **Submit**.
14. To return to the Home screen, press the **Home** button.

SCANNING TO REMOTE DESTINATIONS

You can scan to the following remote destinations:

- Cloud Services: Dropbox, Google Drive, and Microsoft OneDrive
- FTP and SFTP
- SMB

The Scan To Cloud service is a licensed feature. Access to the service requires a feature installation key. To enable this option, on the Feature Installation page, provide a Scan to Cloud Licensing feature installation key. To purchase a Scan to Cloud Licensing feature installation key for your device, contact your Xerox representative.

For more information on configuring the Scan To Remote Destination feature, refer to the *System Administrator Guide*.

Scanning to Cloud Services

Before you scan to a cloud destination, ensure that you configure the printer with the cloud service information. For details, refer to the *System Administrator Guide*. To scan a document and send it to a cloud service, do the following:

1. Load the original document on the document glass or into the duplex automatic document feeder.
2. At the control panel, press the **Home** button.
3. Touch **Scan To**.
4. Touch **Dropbox**, **Google Drive**, or **Microsoft Onedrive**.
5. If prompted, type a valid user name and password in the login window of the cloud provider, then touch **Enter**.
6. Select a folder location for your scanned document, then touch **OK**.
7. To save the scanned document as a specific file name, touch the file name. Enter a new name using the touch screen keypad, then touch **Enter**.
8. To save the scanned document as a specific file format, touch the file format, then select the required format. Adjust scanning options as needed.
9. To begin the scan, touch **Scan**.

   The printer scans documents to the folder that you specified.

Scanning to FTP or SFTP Server

Before you scan to an FTP or SFTP server, ensure that you configure the printer with the server information. For details, refer to the *System Administrator Guide*. To scan a document and send it to an FTP or SFTP server, do the following:

1. Load the original document on the document glass or into the duplex automatic document feeder.
2. At the control panel, press the **Home** button.
3. Touch **Scan To**.
4. Touch **FTP**or **SFTP**, then enter the server address.
5. If prompted, enter a valid user name and password, then touch **Enter**.
6. Select a folder location for your scanned document, then touch **OK**.

7. To save the scanned document as a specific file name, touch the file name. Enter a new name using the touch screen keypad, then touch **Enter**.
8. To save the scanned document as a specific file format, touch the file format, then select the required format. Adjust scanning options as needed.
9. To begin the scan, touch **Scan**.

   The printer scans documents to the folder that you specified.
10. If you are scanning from the document glass, when prompted, to finish, touch **Done**, or to scan another page, touch **Add Page**.

    Note: If you are scanning a document from the automatic document feeder, a prompt does not appear.
11. To return to the Home screen, press the **Home** button.

Scanning to a Shared Folder on a Networked Computer

You can scan a document and save the scanned file to a folder on a networked computer. The Scan To App produces scans in **.jpg**, **.pdf**, **.pdf (a)**, **.xps**, and **.tif** file formats.

Note: To scan to a user home folder, use the Workflow Scanning App. For details, refer to Adding a Scan To Destination to an Address Book Entry.

Before You Begin

Before scanning to a folder on a networked computer, perform these steps:

- Create a shared folder on your computer:
  - For Windows, refer to Sharing a Folder on a Windows Computer.
  - For Macintosh, refer to Sharing a Folder in Macintosh OS X Version 10.7 and Later.
- Configure an SMB Folder. For details, refer to the *System Administrator Guide*, at www.xerox.com/office/VLB415docs.
- Use the Embedded Web Server to associate a Scan To destination with a Device Address Book contact. For details, refer to Adding a Scan To Destination to an Address Book Entry.

  Note: Ensure that the Address Book contains at least one contact with a scan-to destination.

Scanning to a Shared Folder on a Networked Computer

1. Load the original document on the document glass or into the automatic document feeder.
2. At the printer control panel, press the **Home** button.
3. Touch **Scan To**.

4. To specify the destination of the scanned document, select one of the following options.
   - To scan to an SMB folder on a networked computer, touch **Network**. Browse to the required folder, or enter the network path name, then touch **OK**.

   Note: For information on configuring SMB folders, refer to the *System Administrator Guide* at www.xerox.com/office/VLB415docs.

   - To scan to a folder associated with a contact in the address book, touch **Device Address Book**. Select the required contact, then touch the Scan To location.

   Note: For details on how to associate a networked folder with an address book contact, refer to Adding a Scan To Destination to an Address Book Entry.

5. To add another Scan To destination, touch **Add Destination**, then select the required destination.
6. To save the scanned document as a specific filename, touch the filename. Enter a new name using the touch screen keypad, then touch **Enter**.
7. To save the scanned document as a specific file format, touch the file format, then select the required format.
8. Adjust scanning options as needed.
9. To scan multiple pages using the document glass, or to change settings for different sections of the job, touch **Build Job**.
10. To begin the scan, press **Scan**.
11. If Build Job is enabled, when prompted, do these steps.
    - To change settings for the next segment of the document, touch **Program Segment**.
    - To scan another page, load the new document onto the document glass, then touch **Scan Segment**.
    - To finish, touch **Submit**.
12. To return to the Home screen, press the **Home** button.

ADDING A SCAN TO DESTINATION TO AN ADDRESS BOOK ENTRY

You can create Address Book contacts using the Embedded Web Server. A contact is a user with an associated email address, fax number, or scan to destination. If a contact has been set up to include a scan to destination, the contact is available for selection in the Scan To App. Contacts can be marked as a Favorite.

To create an address book contact and add a scan to destination:

1. At your computer, open a Web browser. In the address field, type the IP address of the printer, then press **Enter** or **Return**.

   Note: For details about obtaining the IP address of your printer, refer to Finding the IP Address of Your Printer.

2. Click **Address Book**.

3. To add or edit a contact in the address book:
   - To add a contact, click **Add**, then enter the contact information.
   - To edit a contact, select the contact, then click **Edit**.

Note: If the Add button is unavailable, the address book has reached its limit. The Device Address Book can contain up to 5000 contacts.

4. To associate a scan destination with this contact, for Scan To Destination, click the **Add Destination** (**+**) button. Enter the nickname that you want to appear in the Address Book.
5. Under Protocol, select an option, then enter the destination address:
   - For FTP, SFTP, or SMB:
     - For **IP Address**, enter the IP Address: Port number.
     - For **Host Name**, enter the Host Name: Port number.
   - For Netware, enter the Server Name, Server Volume, NDS Tree, and NDS Context.
6. For SMB, in the **Share** field, enter the name of the destination folder. For example, to save scanned files to a shared folder named scans, type **scans**.
7. In Document Path, enter the name of the subfolder within the destination folder. For example, to save the scanned files to a folder named colorscans inside the scans folder, type **colorscans**.
8. Enter a valid login name and password.

Note: Use the login name for the computer that holds the destination folder. For SMB, the login name is your computer user name.

9. To confirm the validity of the destination details, click **Destination Test**.
10. Click **Save**, or select **Add Another Contact After Saving**, then click **Save**.

Note: To mark a contact as a Favorite for email, fax, or scan to destination, for the appropriate field, click the **Star** icon. If you click the **Star** icon for Display Name, the contact becomes a Global Favorite.

Fax

FAX OVERVIEW

When you send a fax from the printer control panel, the document is scanned and transmitted to a fax machine, using a dedicated telephone line. You can use the Fax App to fax documents to a fax number, an individual contact, or to a group of contacts.

You can use the Fax App to do the following tasks:

- Delay the send of your fax job for up to 24 hours.
- Send a fax from your computer.
- Forward fax documents to an email address.
- Print a fax from a secure folder.

The fax function works best with an analog phone line. Voice-Over-Internet Protocols (VOIPs) such as Fiber Optic Service (FIOS) and Digital Subscriber Line (DSL) are not supported. Before you use the Fax App, configure the Fax Settings to ensure that they are compatible with your local connection and regulations. The Fax Settings include optional features you can use to configure the printer for faxing.

Note: Not all options listed are supported on all printers. Some options apply only to a specific printer model, configuration, operating system, or print driver type.

For information about all the Fax App features and available settings, refer to Apps Features.

For details on configuring and customizing the Apps, refer to the *System Administrator Guide* at www.xerox.com/office/VLB415docs.

If authentication or accounting is enabled on your device, to access features, enter your login details. For details about Personalization for logged-in users, refer to Personalize.

SENDING A FAX

To send a fax:

1. Load your original documents.
   - For single pages or paper that cannot be fed using the duplex automatic document feeder, use the document glass. Lift the duplex automatic document feeder, then place the original document face down in the upper-left corner of the document glass.

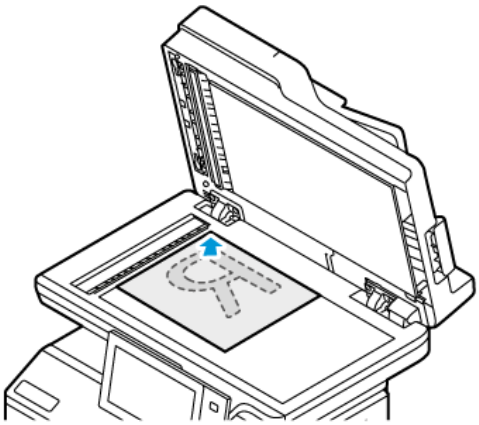

   - For multiple, single, or 2-sided pages, use the duplex automatic document feeder. Remove any staples and paper clips from the pages. Insert the original documents face up in the duplex automatic document feeder with the top of the page entering the feeder first. Adjust the paper guides so that they fit against the original documents.

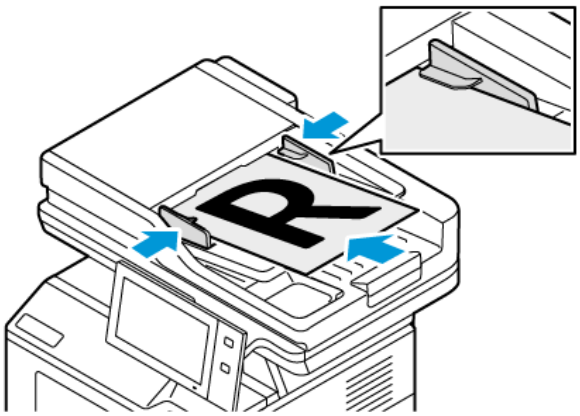

Note:

- When the original documents are detected, the automatic document feeder confirmation indicator LED illuminates.
- If the **Default Screen When Originals Are Detected** feature is configured, when the original documents are detected, the default app is launched automatically.
- If the **Auto Start When Originals Are Detected** feature is enabled, when the original documents are detected, the job starts automatically and the countdown screen is displayed. To stop the countdown and program the job manually, touch **Cancel**.

2. At the printer control panel, press the **Home** button.
3. Touch **Fax**.
4. To clear previous app settings, touch **Reset**.

5. Enter recipients:
   - If the entry screen appears, to enter a recipient, touch an option, or touch **X**.
   - To select a contact or group from the Device Address Book, touch **Device Address Book**. Touch **Favorites** or **Contacts**, then select a recipient.
   - To enter the fax number manually, touch **Manual Entry**. In the Enter Fax Number field, enter the fax number, then touch **Add**.
   - To add more recipients, touch **Add Recipient**, then repeat the procedure.

   Note: To insert a pause as needed, touch **Dial Pause**. To enter longer pauses, touch **Dial Pause** multiple times.
6. Adjust the fax settings as needed.
   - To scan more documents using the document glass or to change settings for different sections of the job, touch **Build Job**.
   - If you are scanning from 2-sided original documents, touch **2-Sided Scanning**, then select an option.

   For details about available features, refer to Apps Features.
7. Touch **Send**.
8. If Build Job is enabled, touch **Scan**, then, when prompted, do these steps:
   - To change settings, touch **Program Next Segment**.
   - To scan another page, touch **Scan Next Segment**.
   - To finish, touch **Submit**.
9. To return to the Home screen, press the **Home** button.

FAX WORKFLOWS

Sending a Delayed Fax

You can set a time in the future for the printer to send your fax job. You can delay the sending of your fax job for up to 24 hours.

Note: Before you use this feature, ensure that the printer is set to the current time. For details, refer to the *System Administrator Guide* at www.xerox.com/office/VLB415docs.

To specify the time to send your fax:

1. Load your original documents.
2. At the printer control panel, press the **Home** button, then touch **Fax**.
3. Add fax recipients, then adjust fax settings as needed. For details, refer to Sending a Fax.
4. Touch **Delay Send**.

5. Touch **Delay send**, then set the time to send the fax.
   - To set the hour, touch the **Hour** field, then use the numeric keypad, or touch the arrows.
   - To set the minutes, touch the **Minute** field, then use the numeric keypad, or touch the arrows.
   - If your printer is set to display the 12-hour clock, touch **AM** or **PM**.
6. Touch **OK**.
7. Touch **Send**. The fax is scanned and saved, then sent at the specified time.

Adding a Cover Sheet

You can use the Cover Sheet option to add an introduction page to the beginning of your fax. You can add a short comment to the cover sheet, as well as To and From details.

To include a cover sheet:

1. Load your original documents.
2. At the printer control panel, press the **Home** button, then touch **Fax**.
3. Add fax recipients, then adjust fax settings as needed. For details, refer to Sending a Fax.
4. Touch **Cover Sheet > On**.
5. To enter the name of the recipient, touch the **To** field, then use the touch screen keyboard. Touch **OK**.
6. To enter the name of the sender, touch the **From** field, then use the touch screen keyboard. Touch **OK**.
7. To add a comment, do one of the following steps.
   - Touch an existing comment.
   - Touch an <Available> comment, then touch the **Edit** icon. To type text, use the touch screen keypad. Touch **OK**.

Note:

- To delete an existing comment, touch the comment, then touch **X**. To confirm the action, touch **Delete**.
- To edit an existing comment, touch the comment, then touch the **Edit** icon. To change the comment, use the touch screen keypad. Touch **OK**.

8. Touch **OK**.

Printing a Secure Fax

When the Fax Secure Receive option is enabled, all faxes that the device receives are held in the Job list until you enter a passcode. After you enter the passcode, the faxes are released and printed.

Note: Before you can receive a Secure Fax, ensure that the Secure Fax Receive feature is enabled. For details, refer to the *System Administrator Guide* at www.xerox.com/office/VLB415docs.

To print a secure fax:

1. At the printer control panel, press the **Home** button.
2. Touch **Jobs**, then from the list, touch the secure fax job required.

3. Touch **Print**, then enter the passcode.
4. Touch **Release All Fax Jobs**.

   All secure faxes print.
5. To return to the Home screen, press the **Home** button.

Deleting a Secure Fax

To delete a secure fax:

1. At the printer control panel, press the **Home** button.
2. Touch **Jobs**, then from the list, touch the secure fax job required.
3. Touch **Delete**, then enter the passcode.
4. Touch **OK**.
5. To return to the Home screen, press the **Home** button.

Adding or Editing Contacts in the Device Address Book from the Control Panel

You can set up the Device Address Book using the Embedded Web Server. The Address Book can contain up to 5000 contacts that you can access when you enter recipients or destinations using apps.

To add or edit contacts in the Device Address Book from the control panel:

Note: Before you can use this feature, the system administrator must enable Create/Edit Contact from Touch Screen for All Users.

1. Load your original documents.
2. At the printer control panel, press the **Home** button.
3. Touch **Fax**.
4. To clear previous App settings, touch **Reset**.
5. Touch **Manual Entry**. To type the fax number, use the touch screen keypad.
6. To add the recipient to the Device Address Book, touch the **Address Book** icon.
7. Do one of the following steps.
   - To create an entry, touch **Create New Contact**. Touch each field, then enter the contact details using the touch screen keypad. Touch **OK**.
   - To add to an existing entry, touch **Add to Existing Contact**. Touch a contact in the list, or use the **Search** option to find a contact.
8. To mark a recipient to appear as a favorite option, touch the **Star** icon.
9. Adjust the fax settings as needed.
10. To start the scan, touch **Send**.
11. To return to the Home screen, press the **Home** button.

Sending a Fax From Your Computer

You can send a fax to the printer from an application on your computer.

Sending a Fax from Windows Applications

You can use the print driver to send a fax from Windows applications.

You can use the fax window to enter recipients, create a cover page with notes, and set options. You can send a confirmation sheet, set the send speed, resolution, send time, and dialing options.

To send a fax from Windows applications:

1. With the desired document or image open in your application, open the Print dialog box. For most software applications, click **File > Print** or press **CTRL+P**.
2. Select the required printer. To open the print driver dialog box, click **Printer Properties**.
3. On the **Printing Options** tab, from the Job Type list, select **Fax**.
4. In the Fax window, click the **Recipients** tab.
5. To add recipients manually:
   a. Click the **Add Recipient** icon.
   b. Type the recipient name and fax number, then add other information as required.
   c. Click **OK**.
   d. To add more recipients, repeat this procedure.
6. To add existing contacts from a phonebook:
   a. Click the **Add From Phonebook** icon.
   b. Select the required phonebook from the list.
   c. Select names from the list, or search for a contact using the search bar.
   d. To add the selected contacts to the Fax Recipients list, click the **Down Arrow**.
   e. Click **OK**.
   f. To add more recipients, repeat this procedure.
7. To include a cover sheet, click the **Cover Sheet** tab. From the Cover Sheet Options list, select **Print a Cover Sheet**. Enter the details as needed, then click **OK**.
8. On the Options tab, select the required options, then click **OK**.
9. To save your settings and return to the main print dialog page, click **OK**.
10. Click **Print**. In the Fax Confirmation window, click **OK**.

Sending a Fax from Macintosh® Applications

You can use the print driver to send a fax from many Macintosh® applications. To install the print driver, refer to Installing the Print Driver Software.

To send a fax from Macintosh® applications:

1. With the required document or image open in your application, open the Print dialog box. For most software applications, click **File > Print** or press **CMD+P**.

2. Select the required printer.
3. In the Print window, in the print options list, click **Xerox Features**.
4. From the Paper/Output window, click **Job Type**, then click **Fax**.
5. To add a recipient, in the Fax window, click the **Recipients** tab, then click the **Add Recipient** icon. Type the recipient name and fax number, add other information as required, then click **OK**. To add more recipients, repeat this procedure.
6. To include a cover sheet, click the **Cover Sheet** tab. From the Cover Sheet list, select **Print a Cover Sheet**, then enter the details as required.
7. To delay the fax send time, click the **Options** tab, click the Send Time menu, then click **Send At**. To enter the send time, click the time entry field, then enter the time required.
8. To select additional fax options, from the Options window, select the fax settings required.
9. To save your settings and return to the main print dialog box, click **OK**.
10. To send the fax, click **Print**.

Server Fax

SERVER FAX OVERVIEW

Server Fax allows you to send a fax over a network to a fax server. The fax server then sends the fax to a fax machine over a phone line. Before you can send a server fax, configure a fax filing repository or filing location. The fax server retrieves the documents from the filing location and transmits them over the telephone network.

For information about all the Server Fax App features and available settings, refer to Apps Features.

For details on configuring and customizing the Apps, refer to the *System Administrator Guide* at www.xerox.com/office/VLB415docs.

If authentication or accounting is enabled on your device, to access features, enter your login details. For details about Personalization for logged-in users, refer to Personalize.

SENDING A SERVER FAX

If a fax server is connected to the network, you can send a document to a fax machine without requiring a dedicated telephone line.

When you use the server fax, a document is scanned and sent to a fax repository on the network. The fax server sends the fax over a telephone line to a fax machine.

Before you can use the server fax, the system administrator is required to enable the server fax app and configure a fax repository or filing location.

To send a server fax:

1. Load your original documents.
   - For single pages or paper that cannot be fed using the duplex automatic document feeder, use the document glass. Lift the duplex automatic document feeder, then place the original document face down in the upper-left corner of the document glass.

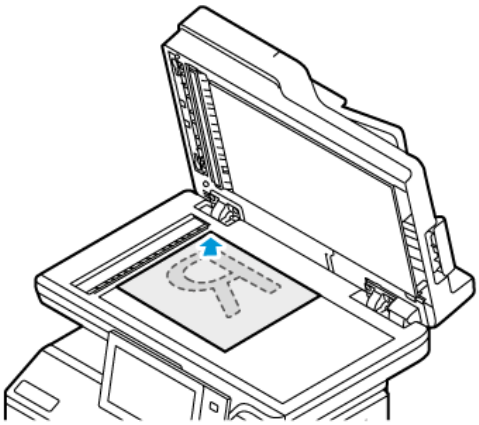

   - For multiple, single, or 2-sided pages, use the duplex automatic document feeder. Remove any staples and paper clips from the pages. Insert the original documents face up in the duplex automatic document feeder with the top of the page entering the feeder first. Adjust the paper guides so that they fit against the original documents.

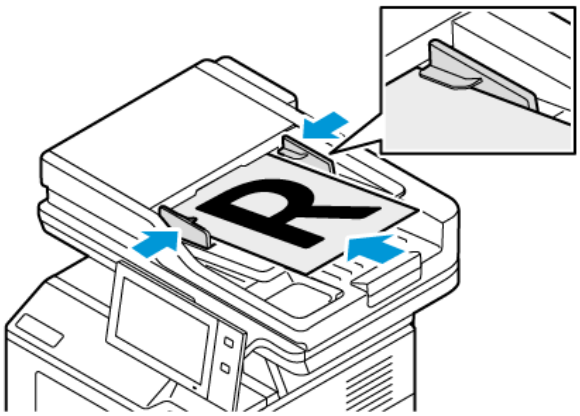

Note: When the original documents are detected, the automatic document feeder confirmation indicator LED illuminates.

2. At the device control panel, press the **Home** button.
3. Touch **Server Fax**.
4. To clear previous app settings, touch **Reset**.

5. Enter recipients.
   - If the entry screen appears, touch an option or touch **X**.
   - To select a contact or group from the Device Address Book, touch **Device Address Book**, then select a recipient.
   - To enter the fax number manually, touch **Manual Entry**. In the Enter Fax Number field, enter the fax number, then touch **Add**.
   - To add more recipients, touch **Add Recipient**, then repeat the procedure.

   Note: To insert a pause as needed, touch **Dial Pause**. To enter longer pauses, touch **Dial Pause** multiple times.
6. Adjust server fax settings as needed.
   - To scan more documents using the document glass or to change settings for different sections of the job, touch **Build Job**.
   - If you are scanning from 2-sided original documents, touch **2-Sided Scanning**, then select an option.

   For details about available features, refer to Apps Features.
7. Touch **Send**.
8. If Build Job is enabled, touch **Scan**, then, when prompted, do these steps:
   - To change settings, touch **Program Next Segment**.
   - To scan another page, touch **Scan Next Segment**.
   - To finish, touch **Submit**.
9. To return to the Home screen, press the **Home** button.

SENDING A DELAYED SERVER FAX

You can set a time in the future for the printer to send your fax job. The delay can range from 15 minutes through 24 hours.

Note: Before you use this feature, set the printer to the current time.

To specify the time to send your server fax:

1. Load your original documents.
2. At the printer control panel, press the **Home** button.
3. Touch **Server Fax**.
4. Add server fax recipients, then adjust server fax settings as needed. For details, refer to Sending a Server Fax.
5. Touch **Delay Send**.
6. Touch **Delay Send**, then set the time to send the server fax:
   - To set the hour, touch the **Hour** field, then use the numeric keypad or touch the arrows.
   - To set the minutes, touch the **Minute** field, then use the numeric keypad or touch the arrows.
   - If your printer is set to display the 12-hour clock, touch **AM** or **PM**.

7. Touch **OK**.
8. Touch **Send**. The fax is scanned and saved, then sent at the time you specified.
9. To return to the Home screen, press the **Home** button.

Print From

PRINT FROM OVERVIEW

You can use the Print From App to print jobs from various sources. You can print jobs stored in a print-ready format from a USB stick. You can print saved jobs and jobs stored in a mailbox.

To create a print-ready file, when you print your documents from programs such as Microsoft Word, select the print to file option. Check with your specific publishing application for options to create print-ready files.

For details on configuring and customizing the Apps, refer to the *System Administrator Guide* at www.xerox.com/office/VLB415docs.

If authentication or accounting is enabled on your device, to access features, enter your login details.

PRINTING FROM A USB FLASH DRIVE

You can print single or multiple files stored on a USB Flash drive. The USB port is on the front of the printer.

Note: Only USB Flash drives formatted to the typical FAT32 file system are supported.

To print from a USB Flash drive:

1. Insert the USB Flash drive into the USB port on the printer.

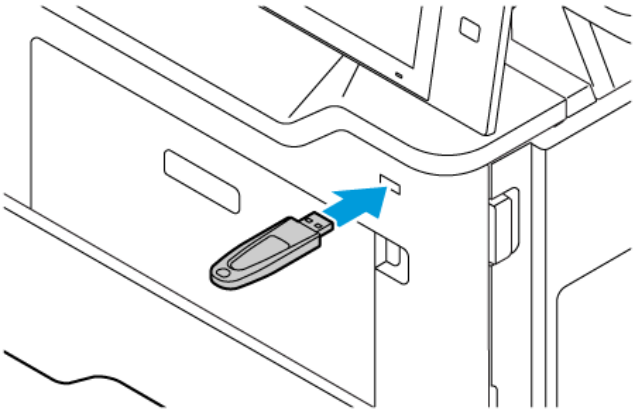

2. At the USB Drive Detected screen, touch **Print from USB**.

> **Warning:** To avoid loss of data or printer malfunction, do not touch the flash drive or the printer in the area shown while actively printing, reading, or writing from the memory device.

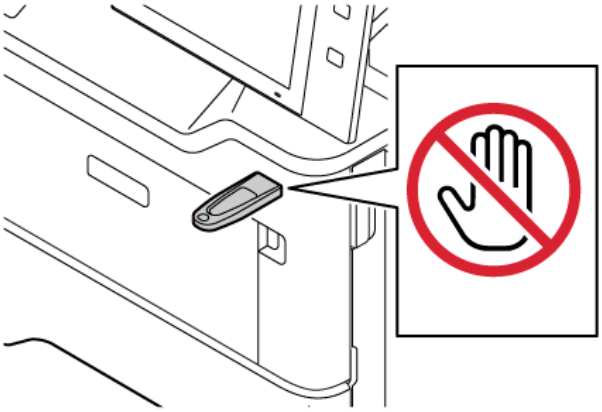

Note: If the Print from USB feature does not appear, enable the feature or contact your system administrator. For details, refer to the *System Administrator Guide* at www.xerox.com/office/VLB415docs.

3. To select a file for printing, browse the file, then touch the check box. If multiple files require printing, browse each file, then select the check box for each file.
4. Touch **OK**.

   A list of files selected for printing appears.
5. To remove files from the printing list:
   - To remove a single file, touch the file, then select **Remove**. To confirm removal, touch **Remove**.
   - To remove all the files, touch a file, then select **Remove All**. To confirm removal, touch **Remove All**.
6. Adjust the feature settings as needed.
7. Touch **Print**.
8. When you are finished, remove the USB Flash drive.
9. To return to the Home screen, press the **Home** button.

PRINTING FROM SAVED JOBS

To print from saved jobs:

1. At the control panel, press the **Home** button, then touch **Print From**.
2. Touch **Saved Jobs**, then touch the name of the folder that contains the saved job.
3. Touch the name of the saved job that you want to print.
4. Select the options for paper supply, quantity, 2-sided printing, and finishing.
5. Touch **Print**.

Note: To print a private saved job, at the Passcode Required screen, enter the passcode, then touch **OK**.

6. To print another saved job, touch the current job name, then touch **Remove**. Touch **Add Document**, touch **Saved Jobs**, then navigate to the job required.
7. To return to the Home screen, press the **Home** button.

PRINTING FROM A MAILBOX

The print from mailbox feature allows you to print a file that is stored in a folder on the printer.

To print from a mailbox:

1. At the control panel, press the **Home** button, then touch **Print From**.
2. Select **Mailboxes**, then touch the name of the folder that contains the document.

   Note: If Mailboxes does not appear, enable the feature or contact the system administrator. For details, refer to the *System Administrator Guide* at www.xerox.com/office/VLB415docs.

3. Touch the name of the document that you want to print.
4. Select the options for paper supply, quantity, 2-sided printing, and finishing.
5. Touch **Print**.
6. To select another job in the mailbox, touch the current job name, then touch **Remove**. Touch **Add Document**, touch **Mailboxes**, then navigate to the job required.
7. To return to the Home screen, press the **Home** button.

@PrintByXerox

@PRINTBYXEROX OVERVIEW

You can use the Xerox® @PrintByXerox App to print email attachments and documents sent to your printer from mobile devices.

When your Xerox device is connected to the Internet, the @PrintByXerox App works with Xerox® Workplace Cloud for simple email-based printing.

Note: The @PrintByXerox App is free to use. For more advanced workflows, use Xerox® Workplace Cloud. The Xerox® Workplace Cloud software requires a specific licence. For details, refer to the *Xerox® @PrintByXerox App Quick Start Guide* available at www.xerox.com/XeroxAppGallery.

For details on configuring and customizing the Apps, refer to the *System Administrator Guide* at www.xerox.com/office/VLB415docs.

If authentication or accounting is enabled on your device, to access features, enter your login details.

PRINTING WITH THE @PRINTBYXEROX APP

1. Send an email with an attachment that contains a supported file type to Print@printbyxerox.com.

   First-time users receive a response email with a user ID and password.
2. At the Xerox device control panel, press the **Home** button.
3. Touch **@PrintByXerox**.
4. Enter your email address, then touch **OK**.
5. On the enter password screen, enter your password using the touch screen keypad, then touch **OK**.
6. Select the documents that you want to print.
7. To modify print settings, touch **Print Settings**, then touch **OK**.
8. To release your print jobs, touch **Print**.
   - A `Submitting Jobs to Print` message and the conversion state appear.
   - When the documents begin to print, a green check mark appears.

Xerox® Connect for XMPie

XEROX® CONNECT FOR XMPIE APP OVERVIEW

The Xerox® Connect for XMPie App, provides instant access to 50 or more templates. With one touch, you can create personalized content from your printer.

Use the Xerox® Connect for XMPie App for free access to templates, with the ability to personalize them for immediate printing.

To configure the Connect for XMPie App on your printer, contact your system administrator, or refer to the *System Administrator Guide* at www.xerox.com/office/VLB415docs.

To use the Connect for XMPie App from the Home screen, touch **Connect for XMPie**, The main screen displays Featured Products and Product Categories. You can browse the categories for the products that you want to create. Follow the instructions on screen to create a job with customized fields. You can preview and print as needed. For more information on XMPie, go to www.support.xerox.com and in the Search box, type `XMPie`.

If authentication or accounting is enabled on your device, to access features, enter your login details. For details about Personalization for logged-in users, refer to Personalize.

Printing

This chapter contains:

Printing Overview 160
Selecting Printing Options 161
Print Jobs 169
Printing Features 174
Using Custom Paper Sizes 184
Print From 187

Printing Overview

Before you print, ensure that your computer and the printer are plugged in, powered on, and connected to an active network. Ensure that you have the correct print driver software installed on your computer. For details, refer to Installing the Print Driver Software.

1. Select the appropriate paper.
2. Load paper in the appropriate tray. At the printer control panel, specify the paper size, color, and type.
3. Access the print settings in your software application. For most software applications, for Windows, press **CTRL +P**, or for Macintosh, press **CMD+P**.
4. Select your printer.
5. To access the print driver settings, for Windows, select **Printer Properties**, **Print Options**, or **Preferences**. For Macintosh, select **Xerox Features**. The name of the option can vary depending on your application.
6. Modify the print driver settings as necessary, then click **OK**.
7. To send the job to the printer, click **Print**.
8. If you selected a special job type, for example Secure Print or Sample Print, your job is held at the printer and requires further action to print. To manage jobs at the printer, use the Jobs app.

   For further information on managing print jobs, refer to Managing Jobs.

Selecting Printing Options

Printing options, also called print driver software options, are specified as Printing preferences in Windows and Xerox® Features in Macintosh. Printing options include settings for 2-sided printing, page layout, and print quality. Printing options that you set from Printing preferences within the Devices and Printers window become the default setting. Printing options that you set within the software application are temporary. The application and the computer do not save the settings after the application is closed.

Note: For Windows 10 and later, Printing options can be set from Printing preferences within the Printers & scanners setting.

PRINT DRIVER HELP

Xerox® print driver software Help information is usually available from the Printing Preferences window. To see the help, click the **Help** (**?**) button in the bottom-left corner of the Printing Preferences window.

Information about Printing Preferences appears in the Help window. From this window, you can select by topic or use the search field. In the search field, enter the topic or function required.

WINDOWS PRINTING OPTIONS

Setting Default Printing Options for Windows

When you print from any software application, the printer uses the print job settings that are specified in the Printing Preferences window. You can specify your most common printing options and save the options for reuse so that you do not have to change the settings each time that you print.

For example, if you want to print on both sides of the paper for most jobs, specify 2-sided printing in Printing Preferences.

1. On your computer, navigate to the list of printers:
   - For Windows Server 2012 and later, click **Start > Settings > Printers**.
   - For Windows 10, click **Start > Settings > Devices > Printers & scanners**.
   - For Windows 11 and later, click **Start > Settings > Bluetooth & devices > Printers & scanners**.

   Note: If you are using a custom Start menu application, the application can change the navigation path to your list of printers.
2. For your printer, select **Printing preferences**:
   - For Windows Server 2012 and later, right-click the icon for your printer, then click **Printing preferences**.
   - For Windows 10, click the icon for your printer, then click **Manage > Printing preferences**.
   - For Windows 11 and later, click the icon for your printer, then click **Printing preferences**.
3. In the Printing Preferences window, click a tab, then select the options. To save the settings, click **OK**.

   Note: For more information about Windows print driver options, click the **Help** button (**?**) in the Printing Preferences window.

Selecting Printing Options for an Individual Job for Windows

To use special printing options for a particular job, you can change the Printing Preferences before sending the job to the printer.

1. With the document open in your software application, access the print settings. For most software applications, click **File > Print** or press **CTRL+P** for Windows.
2. To open the Printing Preferences window, select your printer, then click the **Printer Properties**, **Print Options**, or **Preferences** button. The title of the button can vary, depending on your application.
3. Click a tab in the Printing Preferences window, then make selections.
4. To save your selections and close the Printing Preferences window, click **OK**.
5. To send the job to the printer, click **Print**.

Selecting Printing Defaults in Windows for a Shared Network Printer

1. On your computer, navigate to the list of printers:
   - For Windows Server 2012 and later, click **Start > Settings > Printers**.
   - For Windows 10, click **Start > Settings > Devices > Printers & scanners**.
   - For Windows 11 and later, click **Start > Settings > Bluetooth & devices > Printers & scanners**.

   Note: If the Control Panel icon does not appear on the desktop, right-click the desktop, then select **Personalize**. Select **Control Panel Home > Devices and Printers**.
2. For your printer, select **Printer properties**:
   - For Windows Server 2012 and later, right-click the icon for your printer, then click **Printing properties**.
   - For Windows 10, click the icon for your printer, then click **Manage > Printer properties**.
   - For Windows 11 and later, click the icon for your printer, then click **Printing preferences**.

3. In the printer Properties dialog box, click the **Advanced** tab.
4. On the Advanced tab, click **Printing Defaults**.
5. On the print driver tabs, make your selections as needed, then click **Apply**.
6. To save the settings, click **OK**.

Saving a Set of Commonly Used Printing Options for Windows

You can define and save a set of options, so that you can apply them to future print jobs. After you save a set of print options, they are available for selection from the Saved Settings or Presets list, or the 1–Touch area, if available.

To save a set of printing options:

1. With the document open in your application, click **File > Print**.
2. To open the Printing Preferences window, select your printer, then click **Properties** or **Preferences**.
3. In the Printing Properties window, click the tabs, then select the required settings.
4. In the Printing Properties window, click **Saved Settings** or **Presets**, then click **Save As**.
5. Type a name for the saved setting or preset, then choose preset options, if available:
   - Choose an icon for the preset.
   - To enable the preset as 1–Touch, select **1–Touch Preset**.
   - To share the preset in all print drivers, select **Show this Preset in All Drivers**.
6. Click **OK**.
7. To print with these settings:
   - From the Saved Settings or Presets list, select the name of the preset.
   - For a 1–Touch preset, click **1–Touch**, then click the required 1–Touch preset.

MACINTOSH PRINTING OPTIONS

Selecting Printing Options for Macintosh

To use specific printing options, change the settings before sending the job to the printer.

1. With the document open in your application, click **File > Print**.
2. Select your printer.
3. In the Print window, in the print options list, click **Xerox Features**.

   Note: To see all printing options, click **Show Details**.
4. Select any other required printing options from the lists.
5. To send the job to the printer, click **Print**.

Saving a Set of Commonly Used Printing Options for Macintosh

You can define and save a set of options, so that you can apply them to future print jobs.

To save a set of printing options:

1. With the document open in your application, click **File > Print**.
2. Select your printer from the Printers list.
3. Select the required printing options from the lists in the Print dialog box.

   Note: To see all printing options, click **Show Details**.

4. Click **Presets > Save Current Settings as Preset**.
5. Type a name for the printing options. To save the set of options in the Presets list, click **OK**.
6. To print using these options, select the name from the Presets list.

UNIX, LINUX, AND AS/400 PRINTING

To provide printer spooling and network print server functionality, UNIX-based printing uses LPD/LPR port 515 or lp to port 9100. Xerox printers can communicate using either protocol.

Xerox® Printer Manager

Xerox® Printer Manager is an application that allows you to manage and print to multiple printers in UNIX and Linux environments.

Xerox® Printer Manager allows you to:

- Configure and check the status of network connected printers.
- Set up a printer on your network and monitor the operation of the printer once installed.
- Perform maintenance checks and view supplies status at any time.
- Provide a common look and feel across the many different suppliers of UNIX and Linux operating systems.

Installing Xerox® Printer Manager

Before you begin, ensure that you have root or superuser privileges to install Xerox® Printer Manager.

To install Xerox® Printer Manager:

1. Download the appropriate package for your operating system. To locate print drivers for your printer, go to www.xerox.com/office/VLB415drivers. The files available are:
   - XeroxOSDPkg-AIXpowerpc-x.xx.xxx.xxxx.rpm for the IBM PowerPC family.
   - XeroxOSDPkg-HPUXia64-x.xx.xxx.xxxx.depot.gz to support HP Itanium workstations.
   - XeroxOfficev5Pkg-Linuxi686-x.xx.xxx.xxxx.rpm to support RPM-based 32-bit Linux environments.
   - XeroxOfficev5Pkg-Linuxi686-x.xx.xxx.xxxx.deb to support Debian-based 32-bit Linux environments.
   - XeroxOfficev5Pkg-Linuxx86_64-x.xx.xxx.xxxx.rpm to support RPM-based 64-bit Linux environments.
   - XeroxOfficev5Pkg-Linuxx86_64-x.xx.xxx.xxxx.deb to support Debian-based 64-bit Linux environments.
   - XeroxOSDPkg-SunOSi386-x.xx.xxx.xxxx.pkg.gz for Sun Solaris x86 systems.
   - XeroxOSDPkg-SunOSsparc-x.xx.xxx.xxxx.pkg.gz for Sun Solaris SPARC systems.
2. To install the custom print driver, log in as root, then type the appropriate command for your system:
   - AIX: `rpm -U XeroxOSDPkg-AIXpowerpc-x.xx.xxx.xxxx.rpm`
   - HPUX: `swinstall -s XeroxOSDPkg-HPUXia64-x.xx.xxx.xxxx.depot.gz \*`
   - Solaris, x86 based: `pkgadd -d XeroxOSDPkg-SunOSi386-x.xx.xxx.xxxx.pkg`
   - Solaris, SPARC based: `pkgadd -d XeroxOSDPkg-SunOSsparc-x.xx.xxx.xxxx.pkg`

   The installation creates a Xerox directory in `/opt/Xerox/prtsys`.
3. To install the Xerox® Office Standard Driver on Linux platform, log in as root, then type the appropriate command for your system:
   - Linux, RPM based: `rpm -U XeroxOfficev5Pkg-Linuxi686-x.xx.xxx.xxxx.rpm`
   - Linux, Debian based: `dpkg -i XeroxOfficev5Pkg-Linuxi686-x.xx.xxx.xxxx.deb`

   The installation creates a XeroxOffice directory in `/opt/XeroxOffice/prtsys`.

Launching Xerox® Printer Manager

To launch Xerox® Printer Manager:

1. From your computer, access a command window. At the command prompt, log in as root, then type `xeroxofficeprtmgr`.
2. Press **Enter** or **Return**.

Printing from a Linux Workstation

To print from a Linux workstation, install either a Xerox® print driver for Linux or a CUPS (Common UNIX Printing System) print driver. You do not need both drivers.

Xerox recommends that you install one of the full-featured custom print drivers for Linux. To locate drivers for your printer, go to www.xerox.com/support/drivers.

If you use CUPS, ensure that CUPS is installed and running on your workstation. The instructions for installing and building CUPS are contained in the *CUPS Software Administrators Manual*, written and copyrighted by Easy Software Products. For complete information on CUPS printing capabilities, refer to the *CUPS Software Users Manual* available from www.cups.org/documentation.php.

Installing the PPD File on the Workstation

1. On the Xerox Support website, from the Drivers and Downloads page, download the Xerox® PPD for CUPS (Common UNIX Printing System).
2. Copy the PPD file into the CUPS ppd/Xerox folder on your workstation. If you are unsure of the location of the folder, use the **Find** command to locate the PPD files.
3. Follow the instructions that are included with the PPD file.

Adding the Printer

1. Verify that the CUPS (Common UNIX Printing System) daemon is running.
2. Open a Web browser, type `http://localhost:631/admin`, then press **Enter** or **Return**.
3. For User ID, type `root`. For password, type the root password.
4. Click **Add Printer**, then follow the onscreen prompts to add the printer to the CUPS printer list.

Printing with CUPS (Common UNIX Printing System)

CUPS supports the use of both the System V (lp) and Berkeley (lpr) printing commands.

1. To print to a specific printer in System V, type `lp -dprinter filename`, then press **Enter**.
2. To print to a specific printer in Berkeley, type `lpr -Pprinter filename`, then press **Enter**.

AS/400

Xerox provides Work Station Customization Object (WSCO) files to support IBM i V6R1 or later. A Work Station Customization Object is a lookup table that the host print transform (HPT) uses to translate AS/400 commands to the equivalent PCL code that is specific to a particular printer. A WSCO file can modify many print features, including: paper input tray, 2-sided printing, characters per inch, lines per inch, orientation, fonts, and margins.

The XTOOLS library provides a source WSCO file for each supported Xerox® printer or device. The library and installation instructions are available from www.support.xerox.com.

To install the XTOOLS library, select the downloadable files for the IBM AS/400 operating system, unzip the downloaded `XTOOLSxxxx.zip` file, then follow the instructions to install the library. Download and install the library only once.

Note:

- The host print transform works only on AFPDS and SCS files. To use the WSCO for printing, convert IPDS-formatted printer files to AFPDS files.
- Administrator credentials with IOSYSCFG permissions are required to create a device description or a remote queue.
- For details on AS/400, refer to the *IBM AS/400 Printing V, (Red Book)*, available on the IBM website.

Installing the WSCO Library and Setting Up Print Queues

For detailed instructions on installing the WSCO library and setting up print queues, refer to the installation instructions that are included with the library.

MOBILE PRINTING OPTIONS

This printer can print from iOS and Android mobile devices.

Printing Using Wi-Fi Direct

To print a document from a Wi-Fi-enabled mobile device:

1. On the mobile device, open the document that you want to print.
2. In the device application, select the **Print** button.
3. If there is more than one printer in the area with Wi-Fi Direct enabled, select the required printer from the list.
4. Select the print settings required for the job.
5. Submit the job for printing.

   A message appears on the mobile device.
6. Select **Connect**.

   When the connection is made, a message appears on the printer.
7. At the printer control panel, touch **OK**.

   The job prints.

Printing with AirPrint

You can print directly from your iPhone, iPad, iPod touch, or Mac using AirPrint®. To enable AirPrint® for your printer, refer to Configuring AirPrint.

To print with AirPrint®:

1. Open the email, photograph, webpage, or document that you want to print.
2. Tap the **Action** icon.
3. Tap **Print**.
4. Select your printer, then set the printer options.
5. Tap **Print**.

For more information on configuring and using AirPrint®, refer to the *System Administrator Guide* at www.xerox.com/office/VLB415docs.

Printing with Universal Print

To allow users to access the device, the Azure® administrator needs to share the printer in the Azure® portal. After the printer is shared, the Add Printer feature enables an authorized user to discover the device in Windows 10 or later. The device appears as the cloud printer in the discovered printers list. To enable Universal Print for your printer, refer to Configuring a Device for Universal Print.

1. To add a printer in Windows® Operating System, do the following:
   - For Windows 10, click **Settings > Printers & scanners > Add a printer or scanner**.
   - For Windows 11 and later, click **Settings > Bluetooth & devices > Printers & scanners > Add a printer or scanner**.
2. Select the cloud printer in the list of discovered printers, then click **Add device**.

Note: When a print job is submitted to Universal Print, it is queued in the cloud until the printer fetches the job. The printer checks for jobs after the polling interval elapses, or when you initiate the Check For Jobs Now function.

Printing from a Mopria-Enabled Mobile Device

Mopria is a software feature that enables users to print from mobile devices without requiring a print driver. You can use Mopria to print from your mobile device to Mopria-enabled printers.

Note:

- Mopria and all of its required protocols are enabled by default.
- Ensure that you have the latest version of the Mopria Print Service software installed on your mobile device. You can obtain a free download of the software from the Google Play Store.
- To connect the printer to Wi-Fi or Wi-Fi Direct, purchase and install the Xerox Wireless Network Adapter. For more information, refer to the Xerox® Dual Band Wireless Kit *Hardware Install and Setup* instructions that are included with the kit.
- To use Wi-Fi Direct, in the Embedded Web Server, enable the Wi-Fi Direct feature. For details on configuring Wi-Fi Direct, refer to the *System Administrator Guide* at www.xerox.com/office/VLB415docs.
- To configure the Wireless settings, ensure that devices are connected to the same wireless network as the printer.
- The name and location of your printer appears in a list of Mopria-enabled printers on connected devices.

To print using Mopria, follow the directions that are provided with your mobile device.

Print Jobs

MANAGING JOBS

From the control panel Jobs menu, you can view lists of active jobs, secure jobs, or completed jobs. You can pause, delete, print, or view job progress or job details for a selected job. When you send a secure print job, the job is held until you release it by typing a passcode at the control panel. For details, refer to Printing Special Job Types

From the Jobs window in the Embedded Web Server, you can view a list of active and saved print jobs.

Pausing, Promoting, or Deleting a Job Waiting to Print

1. At the printer control panel, press the **Home** button.
2. Touch **Jobs**, then touch the name of the required print job.
3. Select a task.

   Note: If you do not make a selection, the job automatically resumes after the set timeout period.

   - To pause the print job, touch **Hold**. To resume the print job, touch **Release**.
   - To delete the print job, touch **Delete**. At the prompt, touch **Delete**.
   - To move the job to the top of the list, touch **Promote**.
   - To view the status of the job, touch **Job Progress**.
   - To view information about the job, touch **Job Details**, then touch **Job Settings** or **Required Resources**.
4. To return to the Home screen, press the **Home** button.

   Note:

   - The system administrator can restrict users from deleting jobs. If a system administrator restricts job deletion, you can view the jobs, but you cannot delete them.
   - Only the user that sent the job, or the system administrator, can delete a Secure Print job.

Printing a Job Held for Resources

When a job is held for resources, a status message and a pop-up alert appear on the control panel, as default. From the Embedded Web Server, the system administrator can configure whether only a status message appears or both status message and a pop-up alert appear on the control panel.

1. If the pop-up alert is disabled by the system administrator, to view the held jobs, do the following:
   a. At the printer control panel, press the **Home** button.
   b. Touch **Jobs**.

      A list with active jobs, that are queued for the printer, appears.
2. When the pop-up alert is enabled, if a job is held for resources, a pop-up alert appears on the control panel. On the pop-up alert, touch **View Active Jobs**.

   A list with active jobs, that are queued for the printer, appears.

3. From the jobs list, touch the held job name. The following options appear:
   - **Print On Alternate Paper**: To choose an alternative paper source to enable the job to print, touch **Print On Alternate Paper**. Select a paper tray, then touch **OK**.
   - **Delete**: To delete the print job, touch **Delete**. At the prompt, touch **Delete**.
   - **Job Progress**: To view the progress, touch **Job Progress**.
   - **Job Details**: To view the details, touch **Job Details**. At the prompt, you can view the Job Settings and Required Resources.
4. To print the job, replenish the resources required. The job resumes automatically when the required or alternate resources are available.

   Note: The **Print On Alternate Paper** option is enabled using the Embedded Web Server. For details about the Print On Alternate Paper option, refer to the *System Administrator Guide* at www.xerox.com/office/VLB415docs.
5. To return to the Home screen, press the **Home** button.

PRINTING SPECIAL JOB TYPES

Special job types allow you to send a print job from your computer, then print it from the printer control panel. Select special job types in the print driver, Printing Options tab, under Job Type.

Saved Job

Saved Jobs are documents that are sent to the printer and stored there for future use. All users can print or delete a Saved Job.

At the control panel, from the Print From menu, you can view and print saved jobs. In the Embedded Web Server, in the Jobs window, you can view, print, and delete saved jobs, and you can manage where jobs are stored.

Printing using Saved Job

1. In your software application, access the print settings. For most software applications, press **CTRL+P** for Windows or **CMD+P** for Macintosh.
2. Select your printer, then open the print driver.
   - For Windows, click **Printer Properties**. Depending on your application, the title of the button can vary.
   - For Macintosh, in the Print window, in the print options list, click **Xerox Features**.
3. For Job Type, select **Saved Job**.
   a. Type a job name or select a name from the list.
   b. Type a folder name or select a name from the list.
   c. To add a passcode, click **Private**, type the passcode, then confirm the passcode.
   d. Click **OK**.
4. Select other required printing options.
   - For Windows, click **OK**, then click **Print**.
   - For Macintosh, click **Print**.

Print, Delete, Move, or Copy a Saved Job in the Embedded Web Server

1. At your computer, open a Web browser. In the address field, type the IP address of the printer, then press **Enter** or **Return**.
2. In the Embedded Web Server, click **Home**.
3. Click **Jobs**.
4. Click the **Saved Jobs** tab.
5. For the job that you want to process, select the check box.
6. From the menu, select an option.
   - **Print Job**: This option prints a job immediately.
   - **Delete Job** This option deletes the saved job.
   - **Move Job**: Use this option to move the job to another folder location.
   - **Copy Job**: Use this option to duplicate the job.
7. Click **Go**.

Secure Print

Use Secure Print to print sensitive or confidential information. After you send the job, it is held at the printer until you enter your passcode at the printer control panel.

After a Secure Print job is printed, it is deleted automatically.

Printing using Secure Print

1. In your software application, access the print settings. For most software applications, press **CTRL+P** for Windows or **CMD+P** for Macintosh.
2. Select your printer, then open the print driver.
   - For Windows, click **Printer Properties**. Depending on your application, the title of the button varies.
   - For Macintosh, in the Print window, click **Preview**, then select **Xerox Features**.
3. For Job Type, select **Secure Print**.
4. Type the passcode, confirm the passcode, then click **OK**.
5. Select any other required printing options.
   - For Windows, click **OK**, then click **Print**.
   - For Macintosh, click **Print**.

Releasing a Secure Print Job

1. At the printer control panel, press the **Home** button.
2. Touch **Jobs**.
3. To view Secure Print jobs, touch **Secure Jobs**.

4. Do one of the following:
   - If you submitted a single Secure Print job, touch the folder, then touch the job. Enter the passcode number, then touch **OK**. The job prints automatically.
   - If you submitted multiple Secure Print jobs, touch the folder, enter the passcode number, then touch **OK**. Select an option:
     - To print a single Secure Print job, touch the job required.
     - To print all the jobs in the folder, touch **Print All**.
     - To delete a single Secure Print job, touch the **Trash** icon. At the prompt, touch **Delete**.
     - To delete all the jobs in the folder, touch **Delete All**.

Note: After a Secure Print job prints, the printer deletes it automatically.

5. To return to the Home screen, press the **Home** button.

Sample Set

The Sample Set job type prints one copy of a multiple-copy print job before printing the remaining copies. After reviewing the sample set, you can either print the remaining copies or delete them at the printer control panel.

Sample Set is a type of saved job with these features:

- A Sample Set job appears in a folder named after the user ID associated with the print job.
- A Sample Set job does not use a passcode.
- Any user can print or delete a Sample Set job.
- A Sample Set prints one copy of a job to allow you to proofread the job before printing any remaining copies.

After a Sample Set job is printed, it is deleted automatically.

To print a Sample Set, refer to Printing using Sample Set.

Printing using Sample Set

1. In your software application, access the print settings. For most software applications, press **CTRL+P** for Windows or **CMD+P** for Macintosh.
2. Select your printer, then open the print driver.
   - For Windows, click **Printer Properties**. Depending on your application, the title of the button varies.
   - For Macintosh, in the Print window, click **Preview**, then select **Xerox Features**.
3. For Job Type, select **Sample Set**.
4. Select any other required printing options.
   - For Windows, click **OK**, then click **Print**.
   - For Macintosh, click **Print**.

Releasing a Sample Set

1. At the printer control panel, press the **Home** button.

2. To view available jobs, touch **Jobs**.
3. Touch the Sample Set job.

   Note: The Sample Set file description shows the job as Held for Future Printing, and shows the number of remaining copies of the job.

4. Select an option.
   - To print the remaining copies of the job, touch **Release**.
   - To delete the remaining copies of the job, touch **Delete**.
5. To return to the Home screen, press the **Home** button.

Printing Features

SELECTING PAPER OPTIONS FOR PRINTING

There are two ways to select the paper for your print job. You can let the printer select which paper to use based on the document size, paper type, and paper color you specify. You can also select a specific tray loaded with the desired paper.

- To locate paper options in Windows, in the print driver, click the **Printing Options** tab.
- To locate paper options on Macintosh, in the Print window, in the print options list, click **Xerox Features**. Within Xerox Features, in the options list, click **Paper/Output**.

Select By Tray

Use Select By Tray to print from a specific tray without specifying paper attributes in the print driver or at the printer control panel. This option prints the job from the selected tray, even when more than one tray contains the correct paper for the job.

The following options are available:

- **Automatically Select:** This option prints from any tray that is loaded with the size and type of paper that is required for the print job.
- **Tray X**: This option prints from the selected tray.
- **Bypass Tray**: This option prints from the manual-feed tray. The printer prompts you to remove any other paper from the tray and load the paper that is required for your job.

Note: To prevent paper jams, load the trays with the correct size and type of paper for the print job.

Scaling

Scaling reduces or enlarges the original document to match the selected output paper size.

- For Windows, the scale options are on the Printing Options tab, in the Paper field.
- For Macintosh, the scale options are in the Print window. To view more printing options, click **Show Details**.

Note: Not all options described are supported on all printers. Some options apply only to a specific printer model, configuration, operating system, or print driver type.

The following scaling options are available:

- **Fit to New Paper Size:** This option scales the document to fit the new paper size.
- **Change Document Size:** Use this setting to match the paper size selected in your application. This option does not change the size of the page image printed on the output paper.
- **Automatically Scale:** This option scales the document to fit the selected Output Paper Size. The scaling amount appears in the percentage box below the sample image.
- **No Scaling:** This option does not change the size of the page image printed on the output paper, and `100%` appears in the percentage box. If the original document size is larger than the output size, the page image is

cropped. If the original document size is smaller than the output size, extra space appears around the page image.

- **Manually Scale:** This option scales the document by the amount entered in the percentage box below the preview image.

PRINTING ON BOTH SIDES OF THE PAPER

Printing a 2-Sided Document

If your printer supports Automatic 2-Sided Printing, the options are specified in the print driver. The print driver uses the settings for portrait or landscape orientation from the application for printing the document.

Note: Ensure that the paper size and weight are supported. For more information, refer to Supported Paper.

2-Sided Page Layout Options

You can specify the page layout for 2-sided printing, which determines how the printed pages turn. These settings override the application page orientation settings.

- **1-Sided Print**: This option prints on one side of the media. Use this option when printing on envelopes, labels, or other media that cannot be printed on both sides.
- **2-Sided Print**: This option prints the job on both sides of the paper to allow binding on the long edge of the paper. The following illustrations show the result for documents with portrait and landscape orientations, respectively:

- **2-Sided Print, Flip on Short Edge**: This option prints on both sides of the paper. The images print to allow binding on the short edge of the paper. The following illustrations show the result for documents with portrait and landscape orientations, respectively:

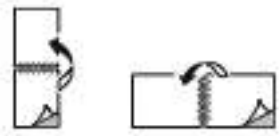

Note: 2–Sided Printing is part of the Earth Smart settings.

To change your default print driver settings, refer to Selecting Printing Options.

PRINT QUALITY

The Windows PostScript (PS) print driver, PCL, and the Macintosh print drivers provide the highest print-quality modes:

- **High Resolution**: This print-quality mode prints halftones at 1200 x 1200 dpi, 1-bit depth.
- **Enhanced**: This print-quality mode prints halftones at 600 x 600 dpi, 8-bit depth.

IMAGE OPTIONS

Image options controls how the printer uses lightness and contrast to produce your document. The Windows PostScript print driver and the Macintosh print drivers provide the widest range of controls on the Image Options tab.

- To locate Image Options in Windows, in the print driver, click the **Image Options** tab.
- To locate Image Options on Macintosh, in the Print window, in the print options list, click **Xerox Features**. Within Xerox Features, in the options list, click **Image Options**.

Lightness

The Lightness feature allows you to adjust the overall lightness or darkness of the text and images in your printed job.

Contrast

You can use the Contrast feature to adjust the variation between light and dark areas of the print job.

PRINTING MULTIPLE PAGES TO A SINGLE SHEET

When printing a multiple-page document, you can print more than one page on a single sheet of paper.

To print 1, 2, 4, 6, 9, or 16 pages per side, on the Page Layout tab, select **Pages Per Sheet**.

- To locate Pages Per Sheet in Windows, on the Document Options tab, click **Page Layout**.
- To locate Pages Per Sheet on Macintosh, in the Print window, in the print options list, click **Layout**.

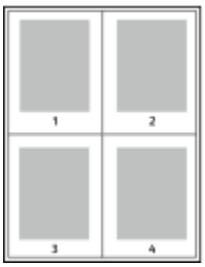

To print a border around each page, select **Page Borders**.

PRINTING BOOKLET LAYOUT

With 2-sided printing, you can print a document in the form of a small booklet. You can create booklets from any paper size that is supported for 2-sided printing.

The print driver automatically reduces each page image and prints four-page images per sheet of paper, two-page images on each side. The pages are printed in the correct order so that you can fold and staple the pages to create the booklet.

- To locate booklet creation in Windows, on the Document Options tab, click **Page Layout**.
- To locate booklet creation on Macintosh, in the Print window, in the print options list, click **Xerox Features**. Within Xerox Features, in the options list, click **Booklet Layout**.

When you print booklets using the Windows PostScript or Macintosh driver, you can specify the gutter and creep.

- **Gutter**: Specifies the horizontal distance in points between the page images. A point is 0.35 mm (1/72 in.).
- **Creep**: Specifies how much the page images shift outward in tenths of a point. Shifting compensates for the thickness of the folded paper, which can cause the page images to shift outward slightly when folded. You can select a value from 0 to 1 point.

GUTTER	CREEP
	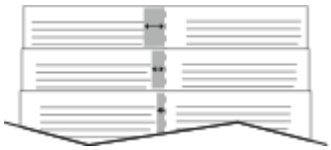

Note: To print a border around each page, select **Page Borders**.

USING SPECIAL PAGES

The Special Pages options control how covers, inserts, and exception pages are added to your printed document.

- To locate Special Pages in Windows, on the Document Options tab, click **Special Pages**.
- To locate Special Pages on Macintosh, in the Print window, in the print options list, click **Xerox Features**. Within Xerox Features, in the options list, click **Special Pages**.

Printing Cover Pages

A cover page is the first or last page of a document. You can select paper sources for the cover pages that are different from the source used for the body of a document. For example, you can use your company letterhead for the first page of a document. You can use heavyweight paper for the first and last pages of a report. You can use any applicable paper tray as the source for printing cover pages.

In the Covers window, the following options are available:

- **No Covers or Disabled**: This option does not print cover pages. No cover pages are added to the document.
- **Front Only**: This option allows you to add a blank or printed front cover to your job.
- **Back Only**: This option allows you to add a blank or printed back cover to your job.
- **Front and Back: Same**: This option adds a front and back cover to your job, and applies the same printing and paper settings for both covers.
- **Front and Back: Different**: This option adds a front and back cover to your job, and allows you to select different printing and paper settings for each cover.

After you make a selection for printing the cover pages, you can select the paper for the front and back covers by size, color, or type. You can use blank or pre-printed paper, and you can print side one, side two, or both sides of the cover pages.

Printing Insert Pages

You can add blank or pre-printed insert pages before page one of each document or after designated pages within a document. The addition of an insert after designated pages within a document separates sections, or acts as a marker or placeholder. Ensure that you specify the paper to use for the insert pages.

In the Inserts window, you can set the location, characteristics, and paper settings for the insert pages:

- **Inserts**: This option allows you to select where to place the insert.
- **Quantity**: Use this option to specify the number of pages to insert at each location.
- **Pages**: Use this option to specify where to place the inserts within the job. Separate individual pages or page ranges with commas. Specify pages within a range with a hyphen. For example, to specify pages 1, 6, 9, 10, and 11, type `1,6,9-11`.
- **Paper Settings**: This option allows you to select the paper size, color, and type to use for the insert pages. To use the same paper size, color, or type as the main body of the job, select **Use Job Setting**.

Printing Exception Pages

Exception pages have different settings from the rest of the pages in the job. You can specify differences, such as page size, page type, and page color. You can change the side of the paper on which to print as your job requires. A print job can contain multiple exceptions.

For example, your print job contains 30 pages. You want five pages to print on only one side of a special paper, and the remainder of the pages printed 2-sided on regular paper. You can use exception pages to print the job.

In the Exceptions window, you can set the location, characteristics, and paper settings for the exception pages:

- **Pages**: Specifies the page or range of pages that use the exception page characteristics. Separate individual pages or page ranges with commas. Specify pages within a range with a hyphen. For example, to specify pages 1, 6, 9, 10, and 11, type `1,6,9-11`.
- **Paper Settings**: Allows you to select the paper size, color, and type to use for the exception pages. To print exception pages on the same paper size, color, or type as the main body of the job, select **Use Job Setting**.
- **2-Sided Printing**: Allows you to select 2-sided printing options for the exception pages. Available options are:
  - **1-Sided Print**: Prints the exception pages on one side only.
  - **2-Sided Print**: Prints the exception pages on both sides of the paper and flips the pages on the long edge. You can bind the job on the long edge of the pages.
  - **2-Sided Print, Flip on Short Edge**: Prints the exception pages on both sides of the paper and flips the pages on the short edge. You can bind the job on the short edge of the pages.
  - **Use Job Setting**: Prints the job using the same 2–Sided Printing setting that is selected for the main body of the job.

Note: Some combinations of 2-sided printing with certain paper types and sizes can produce unexpected results.

PRINTING ANNOTATIONS FOR WINDOWS

An annotation is special-purpose text or an image that you can print across one or more pages. You can preview annotations in the Annotations Preview pane.

The annotations setup for your print job

Note:

- This feature is available only on a Windows computer printing to a network printer.
- Not all options listed are supported on all printers. Some options apply only to a specific printer model, configuration, operating system, or print driver type.

appears in the Annotations summary list. From this list, you can select an annotation to edit or delete.

To print an annotation:

1. In the print driver, click the **Document Options** tab.
2. Click the **Annotations** tab.
3. To add a text annotation, click **Add Comment**. Enter the text in the field, select the required settings, then click **OK**.
4. For a date or time stamp, click **Add Time Stamp**. Specify the date and time option, select the required settings, then click **OK**.
5. To add a picture annotation, click **Add Picture**. To locate the picture, click the **Browse** icon. Select the required settings, then click **OK**.
6. For each annotation, the following options are available:
   - To specify the font, click the **Font** button.
   - For a picture annotation, select the scaling option that specifies the size of the picture in relation to the original image. Use the arrows to scale the image in increments of 1%.
   - To define the angle of the annotation on the page, specify the position option. Or, to rotate the annotation left or right by increments of 1, use the arrows.
   - To define the location of the annotation on the page, specify the position option. Or, to move the annotation in each direction in increments of 1, use the arrows.
   - To adjust the transparency of the annotation, move the slider. To increase transparency, move the slider to the right, or to decrease transparency, move the slider to the left.
   - For Layering, select an option:
     - **Print in Background**: This option prints the annotation behind the text and graphics in the document.
     - **Print in Foreground**: This option prints the annotation over the text and graphics in the document.
   - For Pages, select the pages to print the annotation:
     - **Print on All Pages**: This option prints the annotation on all pages of your document.
     - **Print on Page 1 Only**: This option prints the annotation only on the first page of the document.
7. To save the annotation, click the **Save Annotation** icon.
8. To load a previously saved annotation, click the **Load Annotation** icon.

9. Click **OK**.

PRINTING WATERMARKS FOR WINDOWS

A watermark is special purpose text that can be printed across one or more pages. For example, you can add a word like Copy, Draft, or Confidential as a watermark instead of stamping it on a document before distribution.

Note:

- This feature is available only on a Windows computer printing to a network printer.
- Not all options listed are supported on all printers. Some options apply only to a specific printer model, configuration, operating system, or print driver type.
- Watermarks are not supported for some print drivers when booklet is selected or when more than one page is printed on a sheet of paper.

To print a watermark:

1. In the print driver, click the **Document Options** tab.
2. Click the **Watermark** tab.
3. From the Watermark menu, select the watermark. You can choose from preset watermarks, or create a customized watermark. You can also manage watermarks from this menu.
4. Under Text, select an option:
   - **Text**: Enter the text in the field, then specify the font.
   - **Time Stamp**: Specify the date and time options, then specify the font.
   - **Picture**: To locate the picture, click the Browse icon.
5. Specify the scaling angle and position of the watermark.
   - Select the scaling option that specifies the size of the picture in relation to the original image. Use the arrows to scale the image in increments of 1%.
   - To define the angle of the image on the page, specify the position option, or to rotate the image left or right by increments of 1, use the arrows.
   - To define the location of the image on the page, specify the position option, or to move the image in each direction in increments of 1, use the arrows.
6. Under **Layering**, select how to print the watermark.
   - **Print in Background** prints the watermark behind the text and graphics in the document.
   - **Blend**: This option combines the watermark with the text and graphics in the document. A blended watermark is translucent, so you can see both the watermark and the document content.
   - **Print in Foreground** prints the watermark over the text and graphics in the document.
7. Click **Pages**, then select the pages to print the watermark:
   - **Print on All Pages** prints the watermark on all pages of your document.
   - **Print on Page 1 Only** prints the watermark only on the first page of the document.
8. If you select a picture as a watermark, specify the lightness settings for the image.

9. Click **OK**.

ORIENTATION

Orientation allows you to select the direction that the page prints.

- To locate orientation options in Windows, on the Document Options tab, click **Orientation**.

Note: The orientation setting in your application print dialog box can override the orientation options in the print driver.

- To locate orientation options on Macintosh, in the Print window, click **Show Details**.

The following options are available:

- **Portrait**: Orients the paper so that the text and images print across the short dimension of the paper.

- **Landscape**: Orients the paper so that the text and images print across the long dimension of the paper.

- **Rotated Landscape**: Orients the paper so that the content is rotated 180 degrees and with the long bottom side up.

Note: For Macintosh, to print portrait text and images in landscape orientation, clear the Auto Rotate check box.

ADVANCED PRINTING OPTIONS

You can use the Advanced option or tab to set advanced printing options. Advanced printing selections apply to all jobs that you print with the print driver.

Note: Not all options listed are supported on all printers. Some options apply only to a specific printer model, configuration, operating system, or print driver type.

Job Identification

You can use the Job ID feature to change the job identification setting for your print job. You can print the job identification on a separate banner page or on the pages of your document.

The following options are available:

- **Disable Job ID**: This option directs the printer not to print a banner page.
- **Print ID on a Banner Page**: This option prints the job identification on a banner page.
- **Print ID in Margins - First Page Only**: This option prints the job identification on the first page of the document in the top-left margin.

- **Print ID in Margins - All Pages**: This option prints the job identification in the top-left margin on every page of the document.

Printing Mirror Images

If the PostScript driver is installed, you can print pages as a mirror image. Images mirror left to right when printed.

Job Notification for Windows

You can select to be notified when your job finishes printing. A message appears on your computer screen with the name of the job and the name of the printer where it was printed.

Note: This feature is only available on a Windows computer that is printing to a network printer.

The following options are available:

- **Notify for Completed Jobs**: This option provides a notification when the job has completed.
- **Notify for Completed, but Altered Jobs**: This option provides a notification on all jobs that completed with restrictions.
- **Notify for Failed or Canceled Jobs**: This option provides notification of all jobs that failed to print or were canceled.
- **Play Alert Tone**: This option sounds an alert tone when a notification appears.

Document Encryption for Windows Print Jobs

You can select encryption for your print job. The print file is encrypted before it is transmitted to the printer. The print file is decrypted before it is printed.

This feature is available only when Document Encryption is set to Manually Encrypt Documents in the printer properties of the printer. For details, refer to Setting Encryption Defaults in Windows.

Note: This feature is available on a Windows computer that is printing to a network printer. It applies to the PostScript and PCL print drivers.

Setting Encryption Defaults in Windows

1. Navigate to the list of printers on your computer:
   - For Windows Server 2012 and later, click **Start > Settings > Printers**.
   - For Windows 10, click the Windows **Start > Settings > Devices > Printers & Scanners**.
   - For Windows 11 and later, click **Start > Settings > Bluetooth & devices > Printers & scanners**.

   Note: If the Control Panel icon does not appear on the desktop, right-click the desktop, then select **Personalize**. Select **Control Panel Home > Devices and Printers**.
2. For your printer, select **Printing properties**:
   - For Windows Server 2012 and later, right-click the icon for your printer, then click **Printer properties**.
   - For Windows 10, click the icon for your printer, then click **Manage > Printer properties**.
   - For Windows 11 and later, click the icon for your printer, then click **Printing preferences**.

3. In the Printer Properties dialog box, click the **Administration** tab.
4. For Configurations, click **Document Encryption**, then select an option:
   - **Disabled**: This option disables encryption for all documents that you send to the printer.
   - **Encrypt All Documents**: This option encrypts all documents that you send to the printer.
   - **Manually Encrypt Documents**: This option allows you to set encryption for specific jobs that you send to the printer.

Note: Manually Encrypt Documents is the default printer setting.

5. Click **Apply**.
6. To save the settings, click **OK**.

Using Custom Paper Sizes

You can print on custom paper sizes that are within the minimum and maximum size range supported by the printer. For details, refer to Supported Paper.

DEFINING CUSTOM PAPER SIZES

To print on custom paper sizes, define the custom width and length of the paper in the print driver software and on the printer control panel. When setting the paper size, ensure that you specify the same size as the paper in the tray. Setting the wrong size can cause a printer error. Print driver settings override control panel settings when you print using the print driver software on your computer.

Creating and Saving Custom Paper Sizes in the Print Driver

Custom-size paper settings are saved in the print driver and are available for you to select in all your applications.

For details on supported paper sizes for each tray, refer to Supported Paper.

For further details about creating and saving custom paper sizes in the print driver, click the **Help (?)** button in the bottom-left corner of the printer settings window.

Creating and Saving Custom Sizes for the Windows V3 Print Driver

1. In the print driver, click the **Printing Options** tab.
2. For Paper, click the arrow, then select **Other Size > Advanced Paper Size > Output Paper Size > New**.
3. In the New Custom Paper Size window, enter the height and width of the new size.
4. To specify the units of measurement, at the bottom of the window, click **Measurements**, then select **Inches** or **Millimeters**.
5. To save, in the Name field, type a title for the new size, then click **OK**.

Creating and Saving Custom Sizes for the Windows V4 Print Driver

1. From Windows Control Panel, select **Devices and Printers**.
2. Select the printer, then click **Print server properties**.
3. On the Forms tab, for Create a new form, click the check box.
4. For Form name, type a name for the new paper size.
5. In the Form description (measurements) area, enter the settings:
   - For Units, select **Metric** or **English**.
   - For Paper size, enter measurements for Width and Height.
   - For Printer area margins, enter measurements for Left, Right, Top, and Bottom.

   Note: Ensure that the measurements that you specify are within the supported ranges for the device.
6. Click **OK**.

   The new paper size is added to the paper size list.

Creating and Saving Custom Sizes for Macintosh

1. In the application, click **File > Print**.
2. Click **Paper Size**, then select **Manage Custom Sizes**.
3. To add a new size, in the Manage Paper Sizes window, click the plus sign (**+**).
4. Double-click **Untitled**, then type a name for the new custom size.
5. Enter the height and width of the new custom size.
6. Click the arrow for the Non-Printable Area field, then select the printer from the list. Or, for User Defined margins, set the top, bottom, right, and left margins.
7. To save the settings, click **OK**.

Defining a Custom Paper Size at the Control Panel

You can print custom-size paper from Fully Adjustable Trays and Bypass Tray. If 550-sheet standard trays are set to Fully Adjustable mode, you can print custom-size paper from Trays 1–4. The Bypass tray is always set to Adjustable mode. Custom-size paper settings are saved in the print driver and are available for you to select in all your applications.

Note: To configure the tray settings for Fully Adjustable or Dedicated mode, refer to Configuring Paper Tray Settings.

1. Open the paper tray, then load the custom-size paper.
2. Close the tray.
3. At the control panel, to define the new paper size, touch **Size**, then touch **Custom**.
4. In the Custom Paper Size window, enter the height and width of the new paper size, then touch **OK**.
5. To confirm the settings, touch **Confirm**.

PRINTING ON CUSTOM-SIZE PAPER

Note: Before you print on custom-size paper, define the custom width and length of the paper in the print driver software and on the printer control panel. For more information, refer to Defining Custom Paper Sizes.

Printing on Custom-Size Paper from the Windows V3 Print Driver

Note: Before you print on custom-size paper, define the custom size in the Printer Properties. For details, refer to Creating and Saving Custom Sizes for the Windows V3 Print Driver.

1. Load the custom-size paper in the tray.
2. In the application, click **File > Print**, then select your printer.
3. In the Print dialog box, click **Printer Properties**.
4. On the Printing Options tab, from the Paper list, select the required custom paper size and type.
5. Select any other required options, then click **OK**.
6. In the Print dialog box, click **Print**.

Printing on Custom-Size Paper from the Windows V4 Print Driver

Note: Before you print on custom-size paper, define and save the custom paper size as a Form. For details, refer to Creating and Saving Custom Sizes for the Windows V4 Print Driver.

1. Load the custom-size paper in the tray.
2. In the application, click **File > Print**, then select your printer.
3. In the Print dialog box, click **Printer Properties**.
4. On the Printing Options tab, from the Paper list, select **Other Size**.
5. To select a custom paper size, select **Fit to New Paper Size**, then select the custom paper size.
6. Select any other required options, then click **OK**.
7. In the Print dialog box, click **Print**.

Printing on Custom-Size Paper from Macintosh

1. Load the custom-size paper. For details, refer to Loading Paper.
2. In the application, click **File > Print**.
3. From the Paper Size list, select the custom paper size.
4. Click **Print**.

Print From

PRINTING FROM A USB FLASH DRIVE

You can print single or multiple files stored on a USB Flash drive. The USB port is on the front of the printer.

Note: Only USB Flash drives formatted to the typical FAT32 file system are supported.

To print from a USB Flash drive:

1. Insert the USB Flash drive into the USB port on the printer.

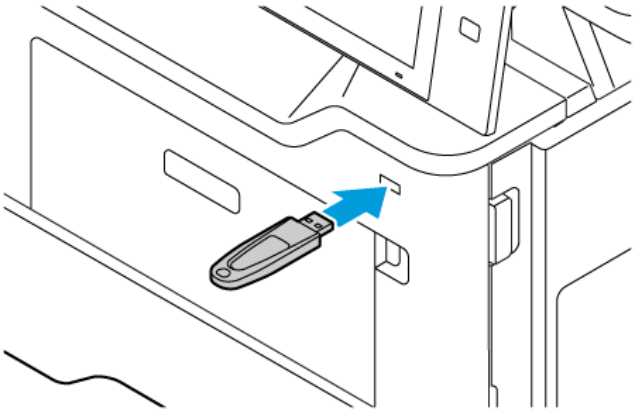

2. At the USB Drive Detected screen, touch **Print from USB**.

Warning: To avoid loss of data or printer malfunction, do not touch the flash drive or the printer in the area shown while actively printing, reading, or writing from the memory device.

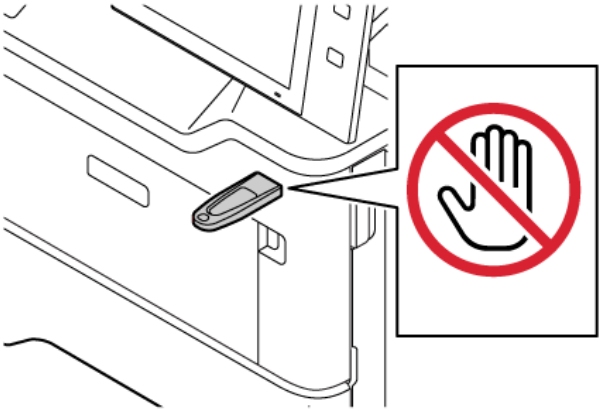

Note: If the Print from USB feature does not appear, enable the feature or contact your system administrator. For details, refer to the *System Administrator Guide* at www.xerox.com/office/VLB415docs.

3. To select a file for printing, browse the file, then touch the check box. If multiple files require printing, browse each file, then select the check box for each file.
4. Touch **OK**.

   A list of files selected for printing appears.

5. To remove files from the printing list:
   - To remove a single file, touch the file, then select **Remove**. To confirm removal, touch **Remove**.
   - To remove all the files, touch a file, then select **Remove All**. To confirm removal, touch **Remove All**.
6. Adjust the feature settings as needed.
7. Touch **Print**.
8. When you are finished, remove the USB Flash drive.
9. To return to the Home screen, press the **Home** button.

PRINTING FROM SAVED JOBS

To print from saved jobs:

1. At the control panel, press the **Home** button, then touch **Print From**.
2. Touch **Saved Jobs**, then touch the name of the folder that contains the saved job.
3. Touch the name of the saved job that you want to print.
4. Select the options for paper supply, quantity, 2-sided printing, and finishing.
5. Touch **Print**.

   Note: To print a private saved job, at the Passcode Required screen, enter the passcode, then touch **OK**.
6. To print another saved job, touch the current job name, then touch **Remove**. Touch **Add Document**, touch **Saved Jobs**, then navigate to the job required.
7. To return to the Home screen, press the **Home** button.

PRINTING FROM A MAILBOX

The print from mailbox feature allows you to print a file that is stored in a folder on the printer.

To print from a mailbox:

1. At the control panel, press the **Home** button, then touch **Print From**.
2. Select **Mailboxes**, then touch the name of the folder that contains the document.

   Note: If Mailboxes does not appear, enable the feature or contact the system administrator. For details, refer to the *System Administrator Guide* at www.xerox.com/office/VLB415docs.
3. Touch the name of the document that you want to print.
4. Select the options for paper supply, quantity, 2-sided printing, and finishing.
5. Touch **Print**.
6. To select another job in the mailbox, touch the current job name, then touch **Remove**. Touch **Add Document**, touch **Mailboxes**, then navigate to the job required.
7. To return to the Home screen, press the **Home** button.

PRINTING FROM THE EMBEDDED WEB SERVER

You can print various file types, such as .txt, .pdf, .ps, and .pcl files directly from the Embedded Web Server without the need of another application or the print driver. You can store files on a local computer hard drive, mass storage device, or network drive.

To print from the Embedded Web Server:

1. At your computer, open a Web browser. In the address field, type the IP address of the printer, then press **Enter** or **Return**.

   Note: For details about obtaining the IP address of your printer, refer to Finding the IP Address of Your Printer.

2. In the Embedded Web Server, click the **Print** tab.
3. To select the file from a local network or remote location, for File Name, click **Browse**. Select the file, then click **Open**.
4. For Printing, select the required options for the job.
   - **Normal Print** prints a job immediately.
   - **Secure Print** prints a job after you enter your passcode at the printer control panel.
   - **Sample Set**, or proof print, prints one copy of a multiple-copy print job and holds the remaining copies at the printer.
   - **Save Job for Reprint** saves a print job in a folder on the print server for future printing. You can specify a job name and folder.
   - **Delay Print** prints a job at a specified time up to 24 hours from the original job submission.
5. If accounting is enabled, enter your User ID and account information.
6. Click **Submit Job**.

   Note: To ensure that the job was sent to the queue, wait for the job submission confirmation message to appear before you close this page.

Paper and Media

This chapter contains:

Paper and Media Overview 192
Supported Paper 193
Configuring Paper Tray Settings 199
Loading Paper 200
Printing on Special Paper 207

Paper and Media Overview

The Xerox® VersaLink® B415 Multifunction Printer can have up to four paper trays:

- Tray 1: Adjustable Standard 550-sheet paper tray. Tray 1 can be configured as dedicated or adjustable paper tray for loading a range of paper sizes.
- Trays 2–4: Optional 550-sheet paper trays. For multiple 550-sheet tray configuration, Trays 2–4 can be configured as dedicated or adjustable paper trays.
- Bypass Tray: The 100-sheet Bypass Tray is located above Tray 1. The Bypass Tray is an adjustable paper tray and cannot be set to Dedicated mode. You can load all types of supported media in the Bypass Tray in small amounts.

The printer can use various media types, such as plain paper, recycled paper, letterhead, pre-printed paper, cardstock, labels, and envelopes. Ensure that you use the correct media for the tray that you are loading. Bypass Tray is for loading small amounts of standard and custom paper. For details on supported paper types and weights, refer to Supported Paper Types and Weights.

Caution: 2-Sided printing is not allowed for paper types, such as Envelopes, Labels, and Cardstock. It can cause misfeeds and other print problems.

Note: When the machine is printing, do not open other trays to avoid paper Jams.

Labels inside each tray show the correct orientation for loading certain types of media. The MAX label shows the maximum fill line for the tray.

Supported Paper

Your printer is designed to use various paper and other media types. To ensure the best print quality and to avoid jams, follow the guidelines in this section.

For best results, use Xerox paper and media recommended for your printer.

RECOMMENDED MEDIA

A list of paper and media recommended for your printer is available at:

- www.xerox.com/rmlna Recommended Media List (United States)
- www.xerox.com/rmleu Recommended Media List (Europe)

ORDERING PAPER

To order paper and other media, contact your local reseller or go to www.xerox.com/office/supplies.

GENERAL PAPER LOADING GUIDELINES

- Do not overfill the paper trays. Do not load paper above the maximum fill line in the tray.
- Adjust the paper guides to fit the paper size.
- Fan paper before loading it in the paper tray.
- If excessive jams occur, use paper or other approved media from a new package.
- Do not print on label media once a label has been removed from a sheet.
- Use only paper envelopes. Print envelopes 1-sided only.

PAPER THAT CAN DAMAGE YOUR PRINTER

Some paper and other media types can cause poor output quality, increased paper jams, or damage your printer. Do not use the following:

- Rough or porous paper
- Inkjet paper
- Glossy or coated paper
- Paper that has been photocopied
- Paper that has been folded or wrinkled
- Paper with cutouts or perforations
- Stapled paper
- Envelopes with windows, metal clasps, side seams, or adhesives with release strips
- Padded envelopes
- Plastic media

Warning: The Xerox Warranty or Service Agreement does not cover damage caused by using unsupported paper or specialty media. For more information, contact your local Xerox representative.

PAPER STORAGE GUIDELINES

Storing your paper and other media properly contributes to optimum print quality.

- Store paper in dark, cool, relatively dry locations. Most paper is susceptible to damage from ultraviolet and visible light. Ultraviolet light, from the sun and fluorescent bulbs, is particularly damaging to paper.
- Reduce the exposure of paper to strong lights for long periods of time.
- Maintain constant temperatures and relative humidity.
- Avoid storing paper in attics, kitchens, garages, or basements. These spaces are more likely to collect moisture.
- Store paper flat, either on pallets, cartons, shelves, or in cabinets.
- Avoid food or drinks in the area where paper is stored or handled.
- Do not open sealed packages of paper until you are ready to load them into the printer. Leave stored paper in the original packaging. The paper wrapper protects the paper from moisture loss or gain.
- Some special media is packaged inside resealable plastic bags. Store the media inside the bag until you are ready to use it. Keep unused media in the bag and reseal it for protection.

PAPER CHARACTERISTICS

The following paper characteristics affect print quality and reliability. Consider these factors before printing on them.

Weight

Trays can feed paper of varying weights. Paper lighter than 60 g/m^2 (16 lb.) may not be stiff enough to feed properly, and may cause jams.

Curl

Curl is the tendency for paper to curl at its edges. Excessive curl can cause paper feeding problems. Curl can occur after the paper passes through the printer, where it is exposed to high temperatures. Storing paper unwrapped in hot, humid, cold, or dry conditions can contribute to paper curling before printing and can cause feeding problems.

Smoothness

Paper smoothness directly affects print quality. If paper is too rough, toner cannot fuse to it properly. If paper is too smooth, it can cause paper feeding or print quality issues. We recommend the use of paper with 50 Sheffield points.

Moisture Content

The amount of moisture in paper affects both print quality and the printer ability to feed the paper correctly. Leave paper in its original wrapper until you use it. Exposure of paper to moisture changes can degrade its performance.

Before printing, store paper in its original wrapper in the same environment as the printer for 24–48 hours. The environment in which the paper is stored must be the same as the printer. Extend the time by several days if the storage or transportation environment is significantly different from printer environment. Thick paper may also require a longer conditioning period.

Grain Direction

Grain refers to the alignment of the paper fibers in a sheet of paper. Grain is either grain long, running the length of the paper, or grain short, running the width of the paper.

Fiber Content

Most high-quality xerographic paper is made from 100% chemically treated pulped wood. This content provides the paper with a high degree of stability, resulting in fewer paper feeding problems and better print quality. Paper containing fibers such as cotton can negatively affect paper handling.

SUPPORTED PAPER TYPES AND WEIGHTS

TRAYS	PAPER TYPES	WEIGHTS
Trays 1–4	Lightweight	60–74 g/m^2
	Plain Hole Punched Recycled Pre-Printed Custom Types 1–7	75–90 g/m^2
	Letterhead Bond	75–105 g/m^2
	Labels	75–131 g/m^2
Bypass Tray	Lightweight	60–74 g/m^2
	Plain Hole Punched Recycled Pre-Printed Custom Types 1–7	75–90 g/m^2
	Letterhead Bond	75–105 g/m^2
	Labels	75–131 g/m^2
	Lightweight Cardstock	120–162 g/m^2

TRAYS	PAPER TYPES	WEIGHTS
	Cardstock	163–216 g/m^2
	Envelope	60–105 g/m^2

Note: Pre-cut tabs are not supported.

SUPPORTED STANDARD PAPER SIZES

TRAY	EUROPEAN STANDARD SIZES	NORTH AMERICAN STANDARD SIZES
Trays 1–4	A4 (210 x 297 mm, 8.3 x 11.7 in.) A5 (148 x 210 mm, 5.8 x 8.3 in.) A6 (105 x 148 mm, 4.1 x 5.8 in.) B5 (176 x 250 mm, 6.9 x 9.8 in.) JIS B5 (182 x 257 mm, 7.2 x 10.1 in.) 215 x 315 mm (8.5 x 12.4 in.)	Letter (8.5 x 11 in.) (216 x 279 mm) Legal (8.5 x 14 in.) (216 x 356 mm) 5 x 7 in. (127 x 178 mm) Statement (5.5 x 8.5 in.) (140 x 216 mm) Executive (7.25 x 10.5 in.) (184 x 267 mm) 8 x 10 in. (203 x 254 mm) 8.5 x 13 in. (216 x 330 mm) 8.5 x 13.4 in. (216 x 340 mm)
	A5 (148 x 210 mm, 5.8 x 8.3 in.) *	

TRAY	EUROPEAN STANDARD SIZES	NORTH AMERICAN STANDARD SIZES
Bypass Tray	A4 (210 x 297 mm, 8.3 x 11.7 in.) A5 (148 x 210 mm, 5.8 x 8.3 in.) A6 (105 x 148 mm, 4.1 x 5.8 in.) B5 (176 x 250 mm, 6.9 x 9.8 in.) JIS B5 (182 x 257 mm, 7.2 x 10.1 in.) 215 x 315 mm (8.5 x 12.4 in.) C5 Envelope (162 x 229 mm, 6.4 x 9 in.) C6 Envelope (114 x 162 mm, 4.5 x 6.4 in.) DL Envelope (110 x 220 mm, 4.3 x 8.6 in.)	Letter (8.5 x 11 in.) (216 x 279 mm) Legal (8.5 x 14 in.) (216 x 356 mm) Postcard (4 x 6 in.) (102 x 152 mm) 5 x 7 in. (127 x 178 mm) Statement (5.5 x 8.5 in.) (140 x 216 mm) Executive (7.25 x 10.5 in.) (184 x 267 mm) 8 x 10 in. (203 x 254 mm) 8.5 x 13 in. (216 x 330 mm) 8.5 x 13.4 in. (216 x 340 mm) Envelope (6 x 9 in.) (152 x 228 mm) Monarch Envelope (3.9 x 7.5 in.) (98 x 190 mm) No. 9 Envelope (3.9 x 8.9 in.) (98 x 225 mm) No. 10 Envelope (4.1 x 9.5 in.) (105 x 241 mm)
	A5 (148 x 210 mm, 5.8 x 8.3 in.) *	

Note: An asterisk (*) next to a value indicates the Long Edge Feed. For A5, the recommended orientation for loading the paper is Long Edge Feed (LEF).

SUPPORTED PAPER SIZES AND WEIGHTS FOR 2-SIDED PRINTING

EUROPEAN STANDARD SIZES	NORTH AMERICAN STANDARD SIZES
A4 (210 x 297 mm, 8.3 x 11.7 in.) 215 x 315 mm (8.5 x 12.4 in.)	Letter (8.5 x 11 in.) (216 x 279 mm) Legal (8.5 x 14 in.) (216 x 356 mm) 8.5 x 13 in. (215.9 x 330 mm) 8.5 x 13.4 in. (215.9 x 340 mm)

Paper weights from 60 to 90 g/m^2 are supported for 2-sided printing.

Note: Do not use envelopes, labels, or lightweight paper for 2-sided printing.

SUPPORTED CUSTOM PAPER SIZES

TRAY	PAPER SIZES
Standard Trays 1–4	Minimum: 105 x 148 mm (4.1 x 5.8 in.) Maximum: 216 x 356 mm (8.5 x 14 in.)
Bypass Tray	Minimum: 76 x 148 mm (3 x 5.8 in.) Maximum: 216 x 356 mm (8.5 x 14 in.)
For 2-sided printing in Trays 1–4 and Bypass Tray	Minimum size: 210 x 279 mm (8.3 x 11 in.) Maximum size: 216 x 356 mm (8.5 x 14 in.)

Configuring Paper Tray Settings

CONFIGURING DEDICATED PAPER TRAYS

The system administrator can set trays to Fully Adjustable mode or Dedicated mode. When a paper tray is set to Fully Adjustable mode, you can change paper settings each time that you load the tray. When a paper tray is set to Dedicated mode, the control panel prompts you to load a specific paper size, type, and color.

Depending on the configuration, your printer can have up to three optional 550-sheet standard paper trays.

Note: To configure tray settings, refer to the *System Administrator Guide* at www.xerox.com/office/VLB415docs.

CHANGING PAPER SIZE, TYPE, AND COLOR

When a paper tray is set to Fully Adjustable mode, you can change paper settings each time that you load the tray. When you close the tray, the control panel prompts you to set the paper size, type, and color of paper loaded.

When a paper tray is set to Dedicated mode, the control panel prompts you to load a specific paper size, type, and color. If you move the guides to load a different paper size, the control panel displays an error message.

To configure the tray settings for Fully Adjustable or Dedicated mode, refer to Configuring Paper Tray Settings.

To set the paper size, type, or color when a tray is set to Fully Adjustable:

1. Open the paper tray, then load the required paper.
2. Close the tray.
3. At the control panel, select the correct paper size, type, and color:
   - To select a new paper size, touch **Size**.
   - To select a new paper type, touch **Type**.
   - To select a new paper color, touch **Color**.
4. To confirm the settings, touch **Confirm**.

To set the paper size, type, or color when a tray is set to Dedicated, refer to Configuring Dedicated Paper Trays.

Loading Paper

LOADING PAPER IN TRAYS 1–4

The system administrator can set 550-sheet standard trays, Trays 1–4, to Fully Adjustable mode or Dedicated mode. Each time a tray is opened and closed, the paper settings appear on the control panel.

- When trays are configured as Fully Adjustable, you can confirm or change the media settings.
- When trays are configured as Dedicated, the control panel displays the media settings for the tray.

Note: Only the system administrator can change the media settings for a dedicated tray. For details on how to configure tray settings, refer to Configuring Paper Tray Settings.

When a tray is empty, a notification appears at the bottom of the control panel.

Do the following to load paper in Trays 1–4, where:

- Tray 1: Standard 550-sheet Tray
- Trays 2–4: Optional 550-sheet Trays

1. Pull out the tray until it stops.

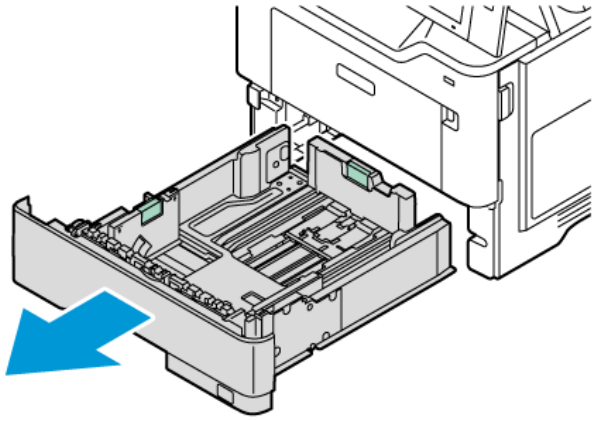

2. Remove any paper that is a different size or type.

3. To move out the length or width paper guides, pinch the guide locks, then slide out the length or width paper guides.

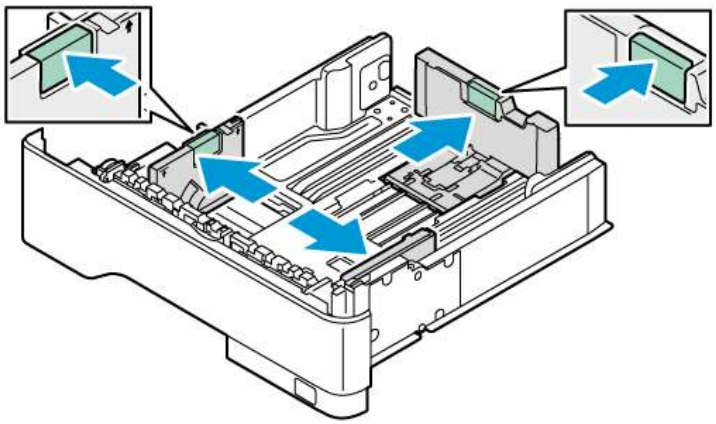

4. Flex the sheets back and forth and fan them, then align the edges of the stack on a level surface. The procedure separates any sheets that are stuck together and reduces the possibility of jams.

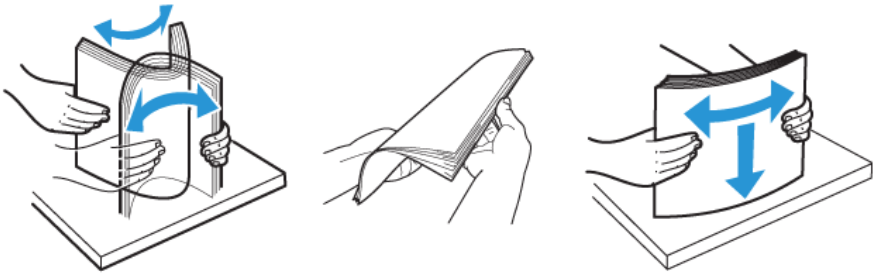

Warning: To avoid jams and misfeeds, do not remove paper from its packaging until you are ready to use it.

5. Load the paper in the tray. Long-edge feed is the recommended orientation for A5 (148 x 210 mm, 5.8 x 8.3 in.) paper.

Warning: Do not load the paper above the maximum fill line. Overfilling the tray can cause paper jams.

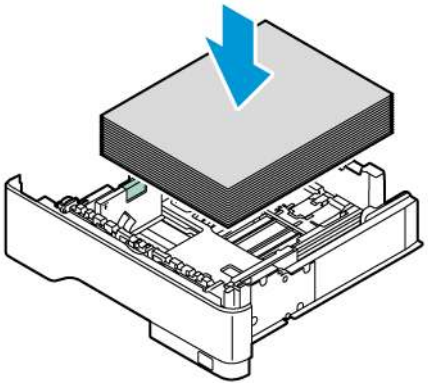

6. To fit the paper, adjust the length and width paper guides. Pinch the guide locks, then slide the paper guides in until they touch the paper.

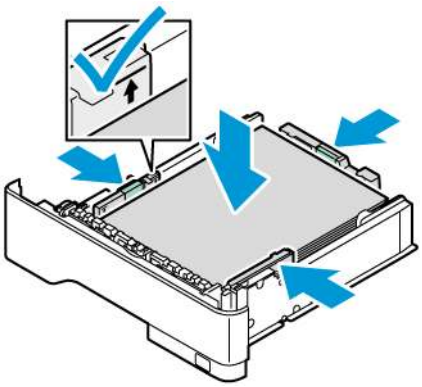

7. Slide the tray back into the printer.

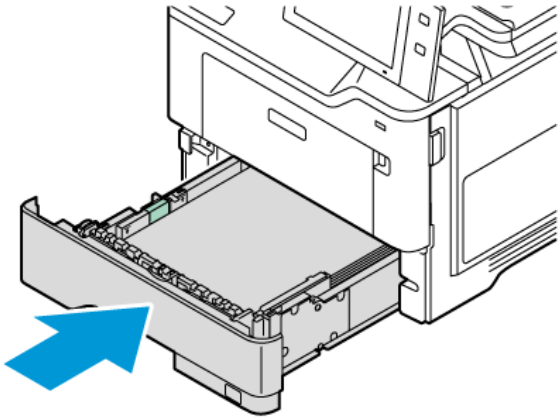

8. At the control panel, select the correct paper size, type, and color.
9. To confirm the settings, touch **Confirm**.

Note: To change the paper settings when the tray is set to Dedicated mode, refer to Configuring Dedicated Paper Trays.

ADJUSTING THE PAPER GUIDES IN THE 550-SHEET ADJUSTABLE TRAYS

You can adjust the paper guides in Trays 1–4 to accommodate standard or custom paper sizes. In the standard position, the guides move into the supported standard paper settings. You can use the Paper Size Preference feature to set the preferred paper size to inches or metric. Paper size options that use the selected units setting appear at the top of the Paper Selection list on the Print tab and User Interface.

- **Inches**: This option sets the paper-size preference to display Imperial sizes first.
- **Metric**: This option sets the paper-size preference to display Metric sizes first.

The Measurement Units can be set to Inches or Metric. To set a custom size in the control panel, you can select from the following options for different measurement units:

- 0.1 in., if the measurement unit is set to Inches or
- 1 mm, if the measurement unit is set to Metric

To move the paper guides from the standard to the custom paper-size position:

1. Pull out the tray until it stops.

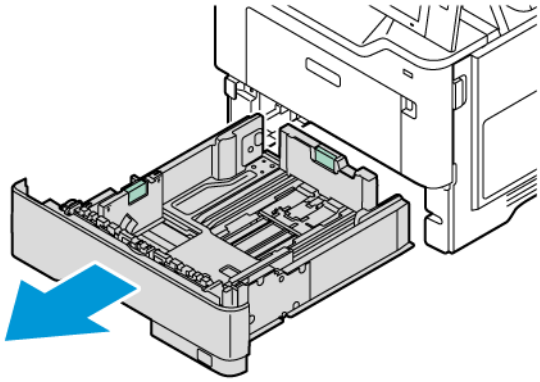

2. Remove any paper from the tray. Pinch the guide levers, then move the length or width guides outward until they stop.

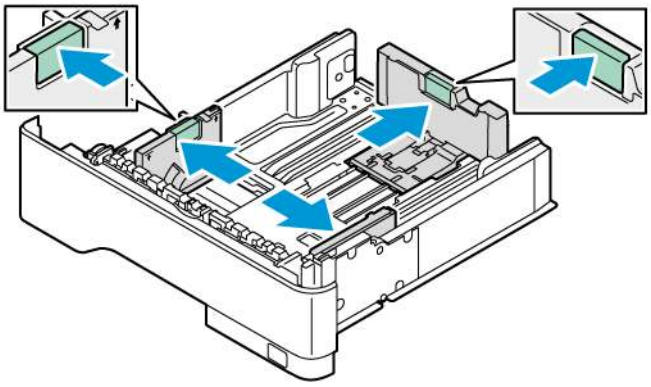

3. Load the custom-size paper in the tray.

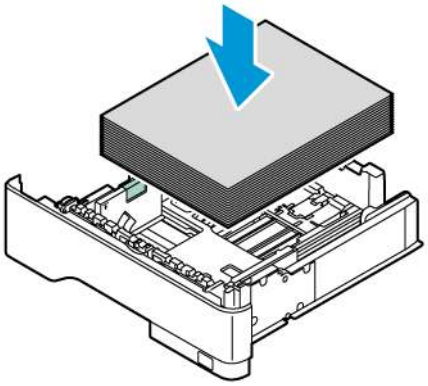

4. To engage the fine-adjustment block, pinch the levers and slide the guides inward.

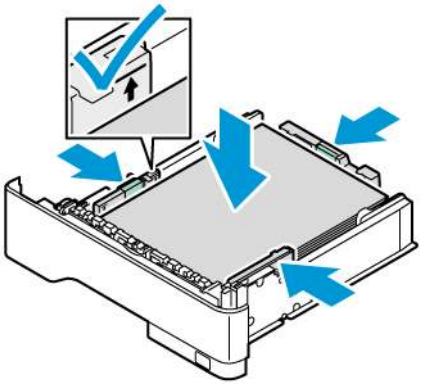

LOADING PAPER IN THE BYPASS TRAY

The Bypass Tray supports the widest variety of media types. The tray is intended primarily for small-quantity jobs that use special media.

The Bypass Tray is located above Tray 1. To load paper in the Bypass Tray:

1. Open the Bypass Tray. If the tray is loaded with paper, remove any paper that is of different size or type.

Note: For larger paper sizes, pull out the extension tray.

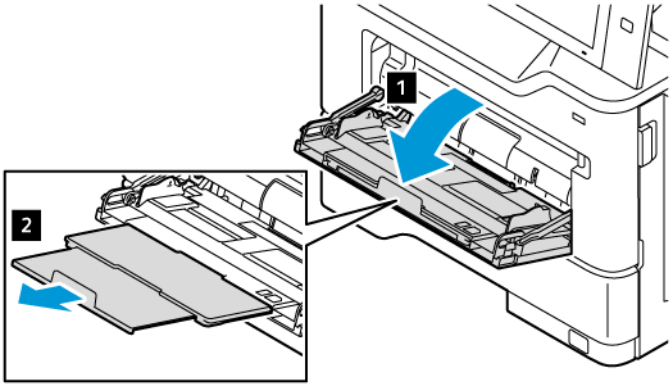

2. Move the width guides to the right edge of the tray.

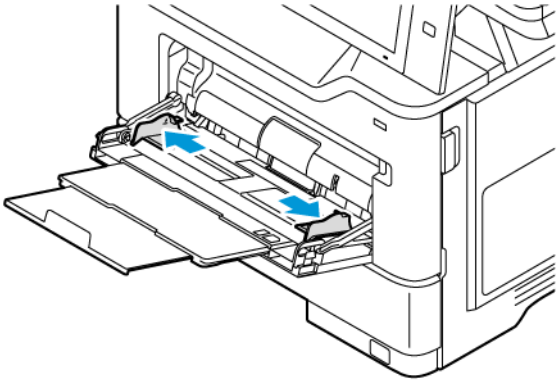

3. Flex the sheets back and forth and fan them, then align the edges of the stack on a level surface. The procedure separates any sheets that are stuck together and reduces the possibility of paper jams.

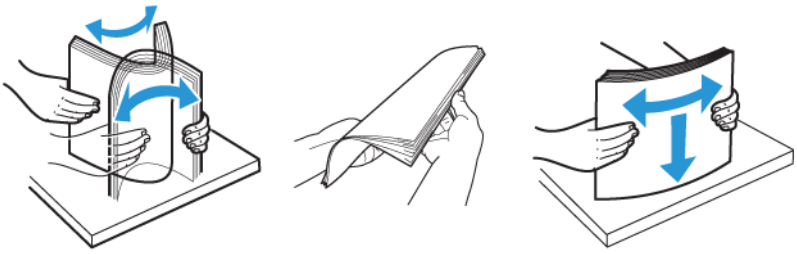

Warning: To avoid jams and misfeeds, do not remove paper from its packaging until you are ready to use it.

4. Load the paper in the Bypass tray. Long-edge feed is the recommended orientation for A5 (148 x 210 mm, 5.8 x 8.3 in.) paper.

Warning: Do not load paper above the maximum fill line. Overfilling can cause paper jams.

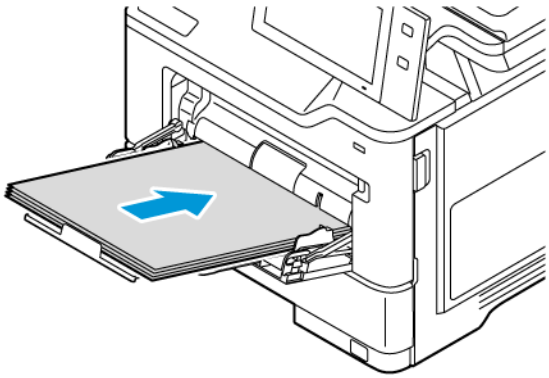

5. Adjust the width guides until they touch the edges of the paper.

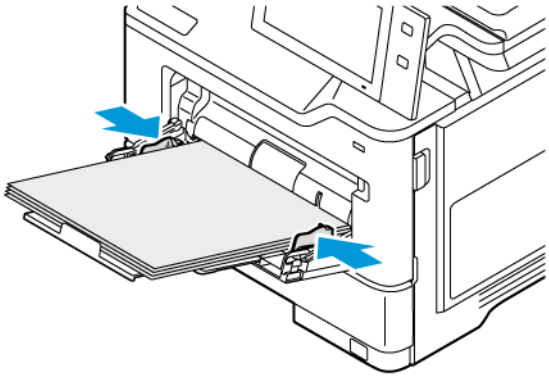

6. At the control panel, select the correct paper size, type, and color.
7. To confirm the settings, touch **Confirm**.

Printing on Special Paper

To order paper or other media, contact your local reseller or go to www.xerox.com/office/supplies.

For reference:

www.xerox.com/rmlna: Recommended Media List (United States)

www.xerox.com/rmleu: Recommended Media List (Europe)

LETTERHEAD, PRE–PRINTED, AND HOLE–PUNCHED MEDIA

You can print letterhead, pre-printed, and hole-punched paper from the following trays:

- Trays 1–4
- Bypass Tray

Loading Letterhead or Pre-Printed Media in Trays 1–4 and Bypass Tray

To load letterhead or pre-printed paper in Trays 1–4 and Bypass Tray:

Warning: Do not load the paper above the maximum fill line. Overfilling the tray can cause paper jams.

- For short-edge feed, insert letterhead or pre-printed paper face up with the top edge toward the front in Trays 1–4.

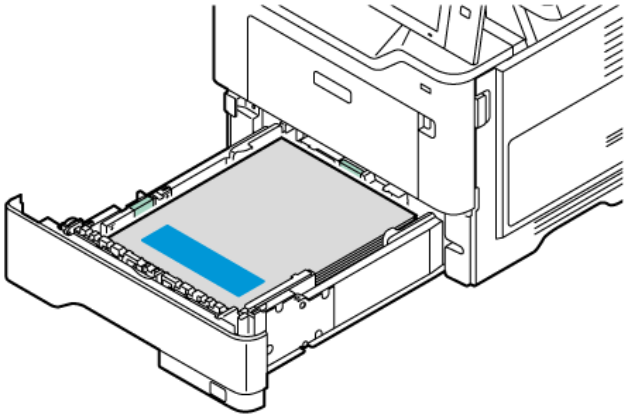

- For short-edge feed printing, load letterhead or pre-printed paper face down with the top edge toward the feed direction of the paper in the Bypass Tray.

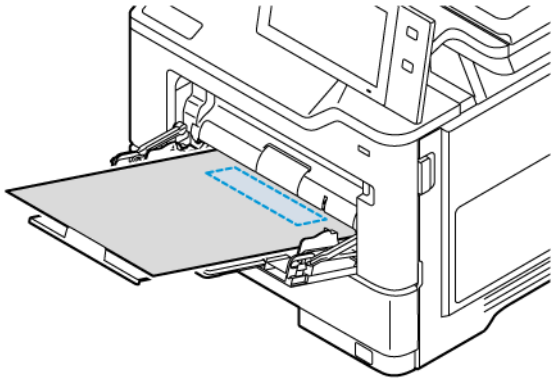

Loading Hole-Punched Media in Trays 1–4 and Bypass Tray

To load hole-punched paper in Trays 1–4 and Bypass Tray:

Warning: Do not load the paper above the maximum fill line. Overfilling the tray can cause paper jams.

- For short-edge feed, load the paper with the holes at the right side of the paper in Trays 1–4.

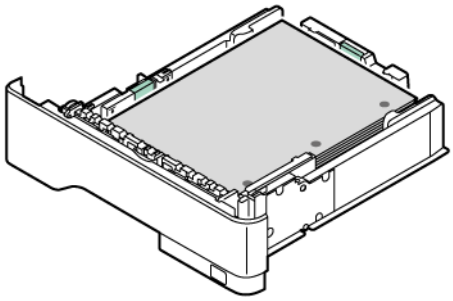

- For short-edge feed, load the paper with the holes at the right side of the paper in the Bypass Tray.

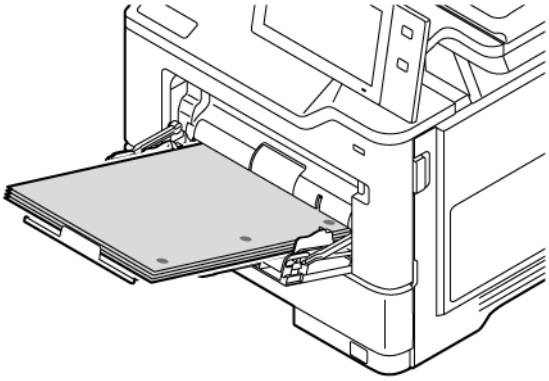

ENVELOPES

You can print envelopes from the Bypass Tray.

Guidelines for Printing Envelopes

- Use only paper envelopes.
- Do not use envelopes with windows or metal clasps.
- Print quality depends on the quality and construction of the envelopes. If you do not get the desired results, try another envelope brand.
- Maintain constant temperatures and relative humidity.
- Store unused envelopes in their packaging to avoid excess moisture and dryness which can affect print quality and cause wrinkling. Excessive moisture can cause the envelopes to seal before or during printing.

- Remove air bubbles from the envelopes before loading them into the tray by setting a heavy book on top of the envelopes.
- In the print driver software, select Envelope as the paper type.
- Do not use padded envelopes. Use envelopes that lie flat on a surface.
- Do not use envelopes with heat-activated glue.
- Do not use envelopes with press-and-seal flaps.

Loading Envelopes in the Bypass Tray

For supported envelope sizes, refer to Supported Paper.

To load envelopes in the Bypass Tray:

1. Open the Bypass Tray.

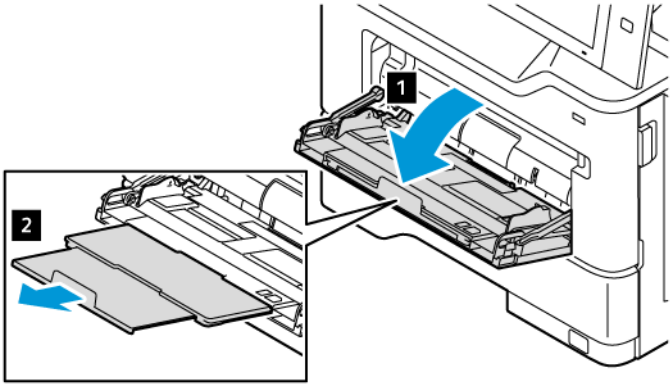

2. Move the width guides to the right edge of the tray.

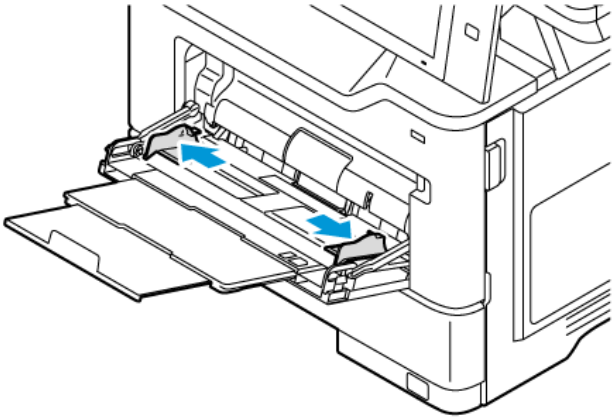

Note: If you do not load envelopes in the Bypass Tray right after they are removed from the packaging, they can bulge. To avoid jams, flatten the envelopes.

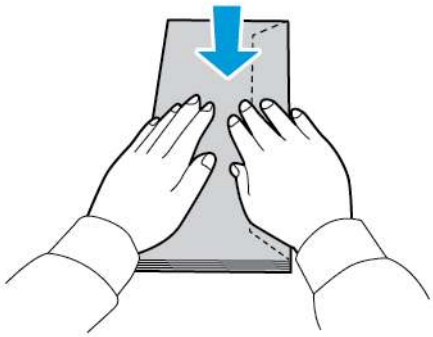

3. Load envelopes in the tray. For envelopes with the flap on a long edge, load envelopes with the flaps face down and closed. Keep the flaps toward the left.

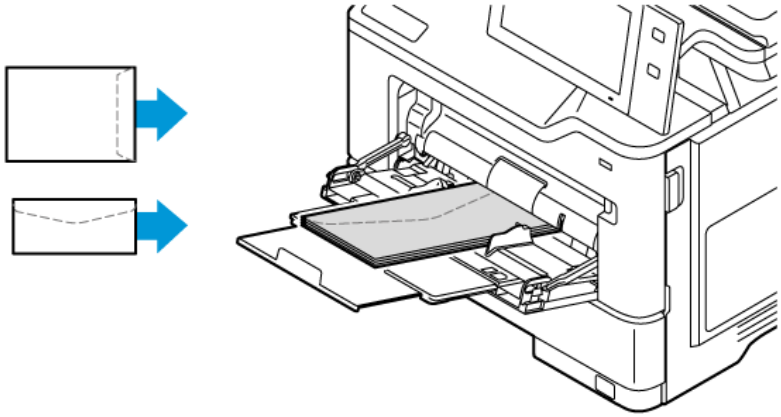

Note: An envelope such as 6 x 9 in. (152 x 228 mm), with the flap on the short edge, insert the envelope with the flap toward the feed direction.

4. At the control panel, select the correct paper size, type, and color. Ensure that the paper type is set to Envelope.
5. To confirm the settings, touch **Confirm**.

6. To return to the Home screen, press the **Home** button.

LABELS

You can print labels from the following trays:

- Trays 1–4
- Bypass Tray

Guidelines for Printing Labels

- Use labels designed for laser printing.
- Do not use vinyl labels.
- Do not feed a sheet of labels through the printer more than once.
- Do not use dry gum labels.
- Print only on one side of the sheet of labels. Use full sheet labels only.
- Store unused labels flat in their original packaging. Leave the sheets of labels inside the original packaging until ready to use. Return any unused sheets of labels to the original packaging and reseal it.
- Do not store labels in extremely dry or humid conditions or extremely hot or cold conditions. Storing them in extreme conditions can cause print-quality problems or cause them to jam in the printer.
- Rotate stock frequently. Long periods of storage in extreme conditions can cause labels to curl and jam in the printer.
- In the print driver software, select Label as the paper type.
- Before loading labels, remove all other paper from the tray.

Warning: Do not use any sheet where labels are missing, curled, or pulled away from the backing sheet. It could damage the printer.

Loading Labels

To load labels in Trays 1–4 and Bypass Tray:

1. Pull out the tray until it stops.

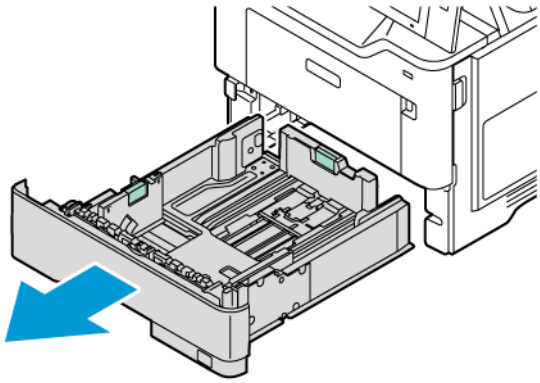

2. Ensure that the paper guides are set in the correct position for the size of labels you are loading.
3. Remove any paper that is a different size or type.
4. To move out the length or width paper guide, release the guide lock, then slide out the length or width paper guide.

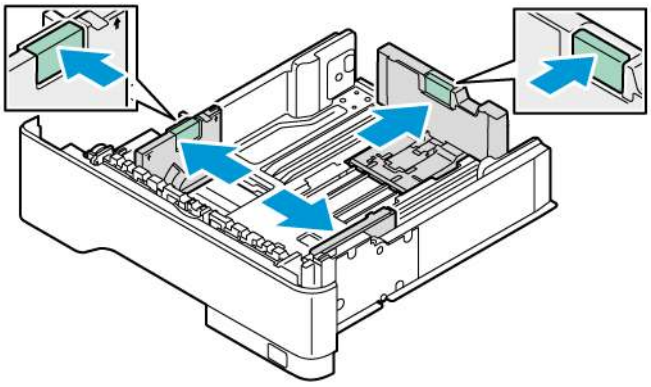

5. Load the labels in any of the trays:
   a. Load the labels in the Standard Trays 1–4 and adjust the length and width paper guides to fit the labels. For short-edge feed, insert labels face down with the bottom edge toward the front of the tray.

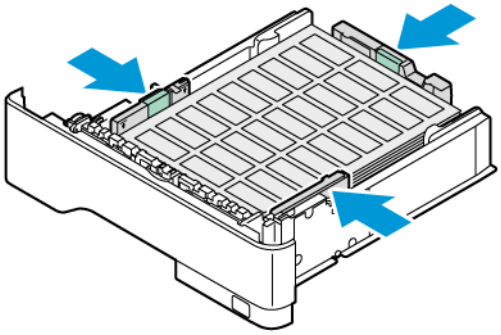

Warning: Do not load paper above the maximum fill line. Overfilling can cause paper jams.

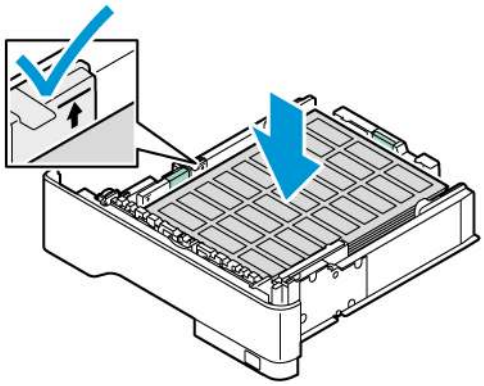

b. Load the labels face up in the Bypass Tray with the bottom edge toward the feed direction of the tray. Adjust the length and width paper guides to fit the labels.

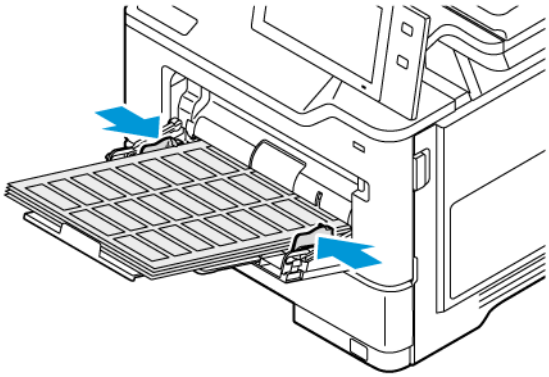

6. Slide the tray back into the printer.

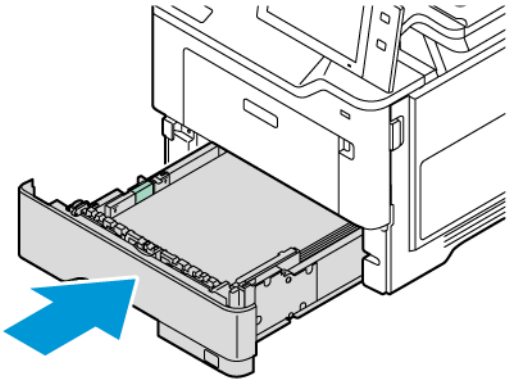

7. At the control panel, select the correct paper size, type, and color. Ensure that the paper type is set to Labels.

Note: To change the paper settings when the tray is set to Dedicated mode, refer to Configuring Dedicated Paper Trays.

8. To confirm the settings, touch **Confirm**.
9. To return to the Home screen, press the **Home** button.

Maintenance

This chapter contains:

General Precautions..... 216
Cleaning the Printer..... 217
Supplies 221
Managing the Printer..... 230
Moving the Printer 231

General Precautions

Caution:

- Internal parts of the printer can be hot. Use caution when doors and covers are open.
- Keep all cleaning materials out of the reach of children.
- Do not use pressurized spray cleaning aids on or in the printer. Some pressurized sprays contain explosive mixtures and are not suitable for use in electrical applications. Use of pressurized spray cleaners increases the risk of fire and explosion.
- Do not remove the covers or guards that are fastened with screws. You cannot maintain or service any parts that are behind these covers and guards. Do not attempt any maintenance procedure that is not described in the documentation supplied with your printer.

Warning:

- When cleaning your printer, do not use organic or strong chemical solvents or aerosol cleaners. Do not pour fluids directly into any area. Use supplies and cleaning materials only as directed in this documentation.
- Do not place anything on top of the printer.
- Do not leave the covers and doors open for any length of time, especially in well-lighted places.
- Do not open covers and doors during printing.
- Do not tilt the printer while it is in use.
- Do not touch the electrical contacts or gears. Doing so could damage the printer and cause the print quality to deteriorate.
- Ensure that any parts removed during cleaning are replaced before you plug in the printer.

Cleaning the Printer

CLEANING THE PRINTER EXTERIOR

Regular cleaning keeps the touch screen, control panel, and exterior areas of the printer free from dust and dirt.

1. To avoid activating buttons and menus when cleaning the printer, press the **Power/Wake** button, then touch **Sleep**.

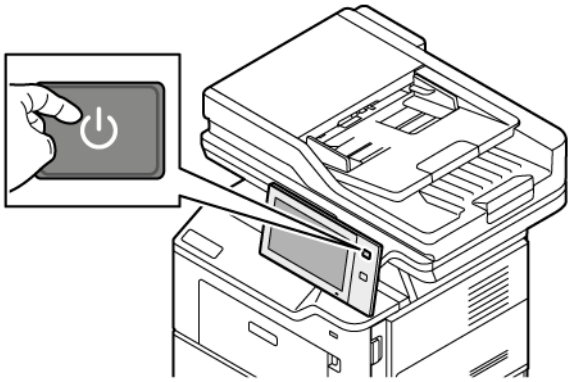

2. To remove fingerprints and smudges, clean the touch screen and control panel with a soft, lint-free cloth.

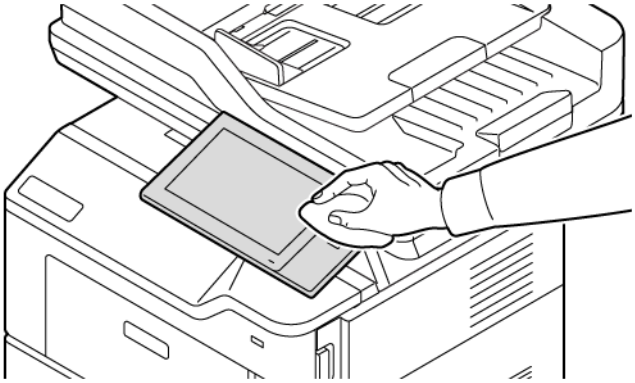

3. To return the printer to Ready mode, press the **Power/Wake** button.
4. Use a soft, lint-free cloth to clean the outside of the output tray, paper trays, and other exterior areas of your printer.

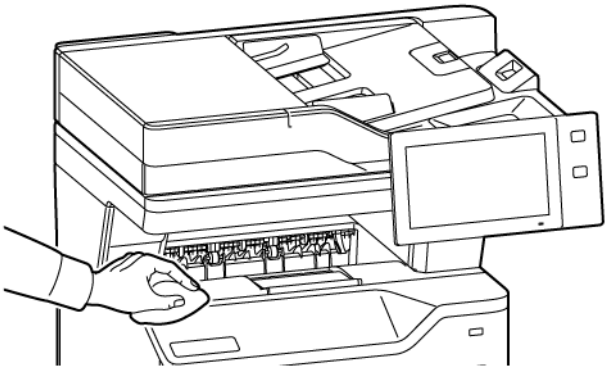

Cleaning the Scanner

To ensure optimum print quality, clean the document glass regularly. Cleaning helps avoid output with streaks, smears, and other marks that transfer from the glass while scanning documents.

Note: For best results, use Xerox® Glass Cleaner to remove marks and streaks.

1. Slightly dampen a soft, lint-free cloth with water.
2. Remove any paper or other media from the output tray.
3. Open the document cover.

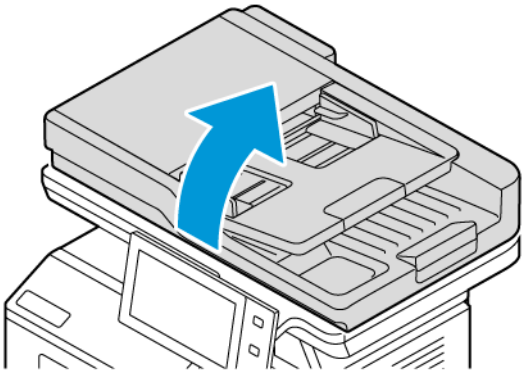

4. Wipe the entire area of ADF glass until it is clean and dry.

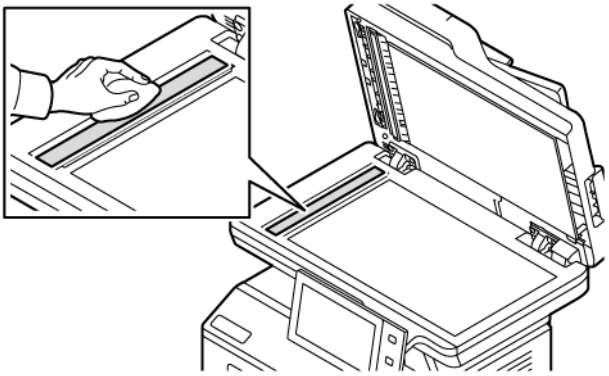

5. Wipe the entire area of ADF glass pad until it is clean and dry.

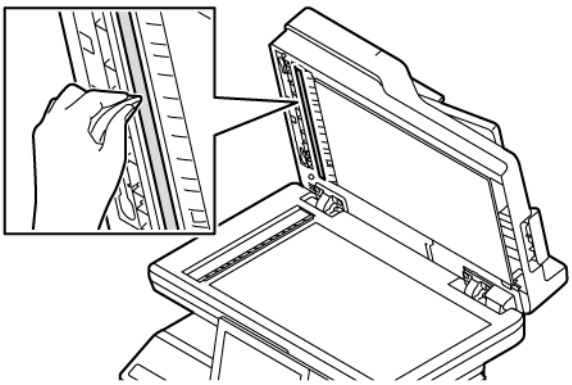

6. Wipe the surfaces of the document glass and CVT glass until the surfaces are clean and dry.

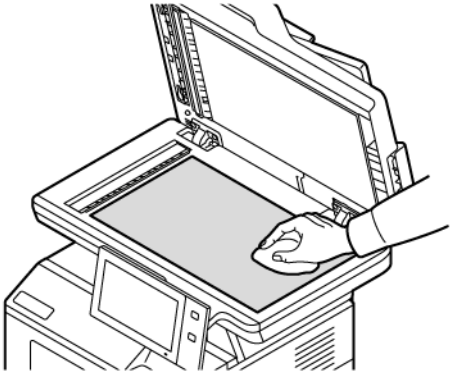

7. Wipe the white underside of the document cover until it is clean and dry.

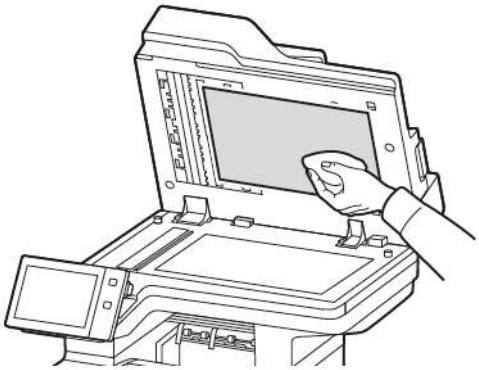

8. Close the document cover.

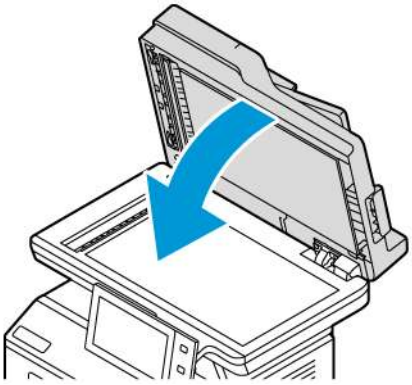

Cleaning the Document Feeder Feed Rollers

Dirt on the document feeder feed rollers can cause paper jams or deteriorate print quality. For best performance, clean the document feeder rollers once a month.

1. Open the top cover of the document feeder.

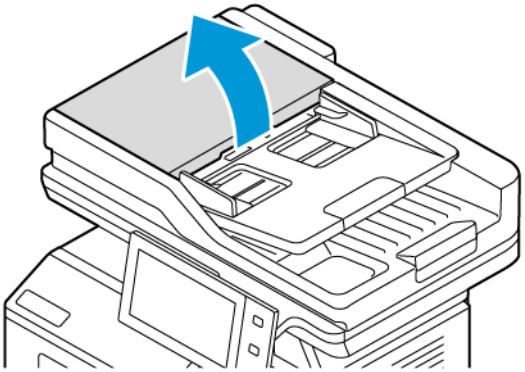

2. While turning the rollers, wipe the rollers with a clean, lint-free cloth moistened with water.

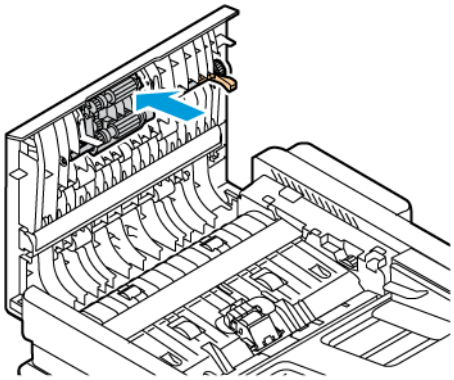

3. Close the document feeder top cover.

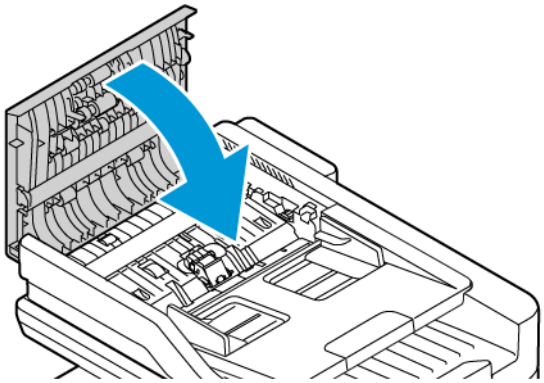

Supplies

CONSUMABLES

Consumable supplies are printer supplies that become depleted during the operation of the printer. Consumable supply for this printer includes Genuine Xerox® Black Toner Cartridge.

Note:

- Each consumable includes installation instructions. To replace consumables, refer to the instructions included with the consumable supply.
- Only install new toner cartridges in your printer. If a used toner cartridge is installed, then the toner remaining amount displayed can be inaccurate.
- To ensure print quality, the toner cartridge is designed to cease functioning at a predetermined point.
- You can use Xerox Easy Assist (XEA) app to check the status of supplies and order them. For more information, refer to Xerox® Easy Assist (XEA) App.

Warning: Use of toner other than genuine Xerox® Toner can affect print quality and printer reliability. Xerox® Toner is the only toner designed and manufactured under strict quality controls by Xerox for specific use with this printer.

ROUTINE MAINTENANCE ITEMS

Routine maintenance items are printer parts that have a limited life and require periodic replacement. Replacements can be parts or kits. Routine maintenance items are typically customer-replaceable parts.

Note: Each routine maintenance item includes installation instructions.

Routine maintenance items for this printer include the following:

- Imaging Unit
- Duplex Automatic Document Feeder (DADF) Roller Assembly

ORDERING SUPPLIES

When to Order Supplies

A warning appears on the control panel when supplies near the replacement time. Verify that you have replacements on hand. To avoid interruptions to your printing, order these items when the messages first appear on the control panel. An error message appears on the control panel when supplies require replacement.

Order supplies from your local reseller or go to www.xerox.com/office/supplies.

Warning: Use of non-Xerox supplies is not recommended. The Xerox Warranty or Service Agreement do not cover damage, malfunction, or degradation of performance caused by use of non-Xerox supplies, or the use of Xerox supplies not specified for this printer.

Supply Status

You can check the status and percentage of life remaining for your printer supplies at the control panel or from the Embedded Web Server. When printer supplies near their replacement time, warning alerts appear at the control panel.

You can customize the alerts that appear at the control panel and configure email alert notifications using the Embedded Web Server.

To check the supplies status and set up alerts using the Embedded Web Server, refer to the *System Administrator Guide* at www.xerox.com/office/VLB415docs.

To check the supplies status at the control panel:

1. At the printer control panel, press the **Home** button.
2. To view status information for the printer supplies, touch **Device > Supplies**.
3. To view details about a specific supply item, touch the item required.
4. To return to the Supplies screen, touch **X**.
5. To view more details, touch **Other Supplies**. Scroll through the list, then select an option.
6. To return to the Supplies screen, touch **X**.
7. To print the Supplies Report, touch **Print Supplies Report**.
8. To return to the Device screen, touch **X**.

TONER CARTRIDGES

Caution:

- When replacing a toner cartridge, be careful not to spill the toner. If any toner spills, avoid contact with clothes, skin, eyes, and mouth. Do not inhale the toner dust.
- Keep toner cartridges out of the reach of children. If a child accidentally swallows toner, have the child spit out the toner, and rinse out their mouth with water. Consult a physician immediately.

Caution: Use a damp cloth to wipe off spilled toner. Never use a vacuum cleaner to remove spills. Electric sparks inside the vacuum cleaner can cause a fire or explosion. If you spill a large volume of toner, contact your local Xerox representative.

Caution: Never throw a toner cartridge into an open flame. Remaining toner in the cartridge can catch fire and cause burn injuries or an explosion.

Replacing the Toner Cartridge

When it is time to replace the toner cartridge, the printer displays a message on the control panel.

Note: Each toner cartridge includes installation instructions.

To replace a toner cartridge:

Warning: Do not perform this procedure when the printer is copying or printing.

1. Open the front door, Door A of the printer.

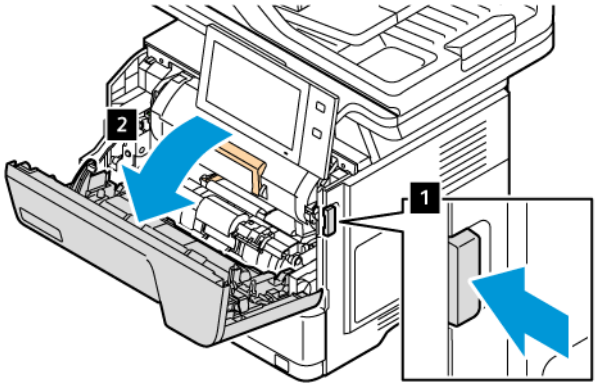

2. Firmly grip the cartridge handle, then remove the used toner cartridge from the printer.

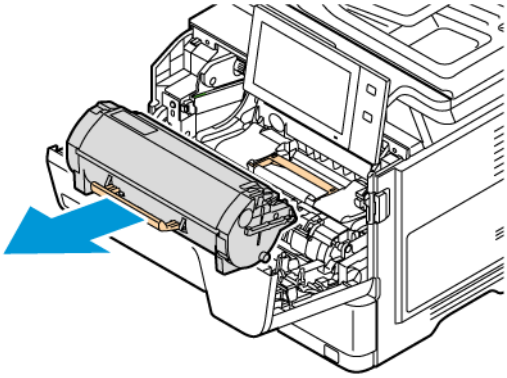

3. Unpack the new toner cartridge, then shake it to redistribute the toner.

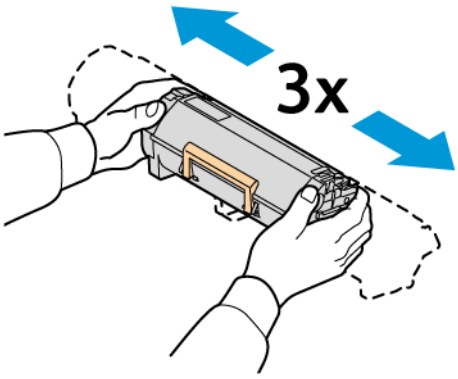

4. Insert the new toner cartridge.

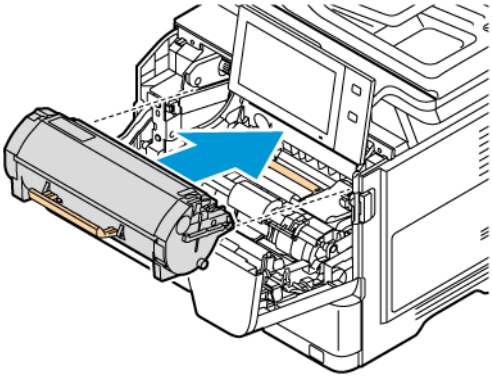

5. Close the front door, Door A.

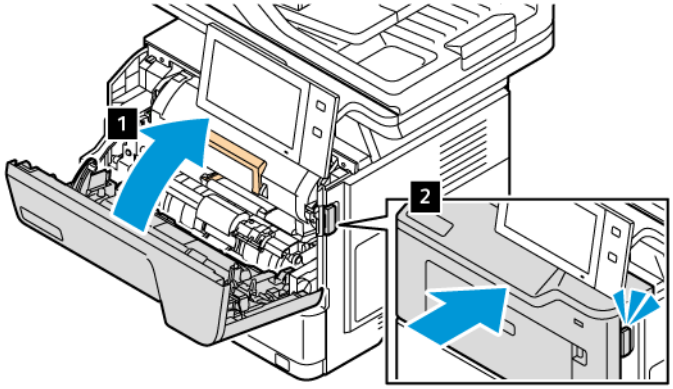

IMAGING UNIT

Replacing the Imaging Unit

When it is time to replace the imaging unit, the printer displays a message appears on the control panel.

Warning: Do not perform this procedure when the printer is copying or printing.

To replace the imaging unit:

1. Open the front door of the printer.

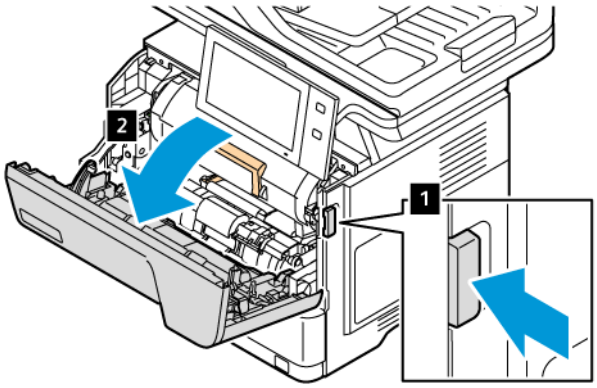

2. Remove the toner cartridge from the printer.

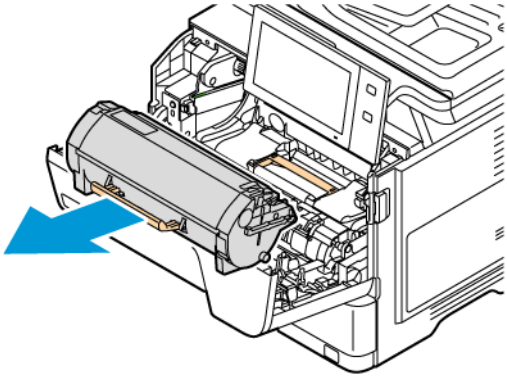

3. Remove the used imaging unit from the printer.

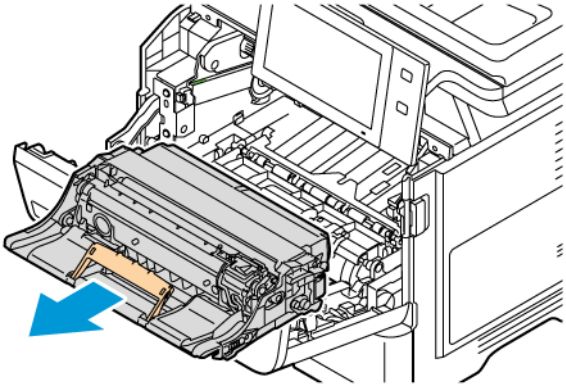

4. Unpack the new black imaging unit, then to redistribute the toner, shake it three times.

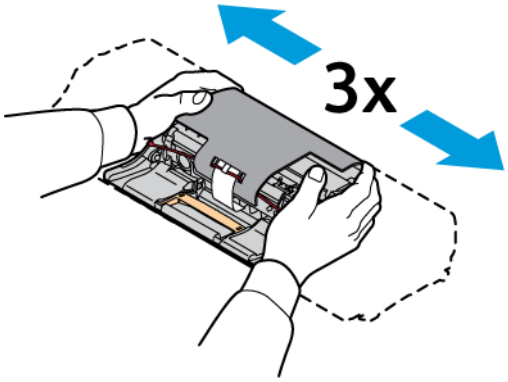

Caution: Do not expose the photoconductor unit to direct light for more than 10 minutes. Extended exposure to light may cause print quality problems.

Warning: Do not touch the shiny photoconductor drum under the imaging unit. Doing so may affect the quality of future print jobs.

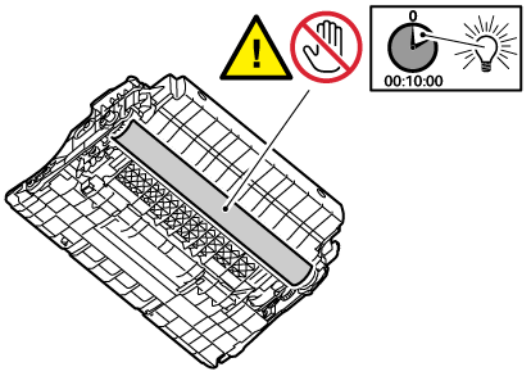

5. Insert the new imaging unit straight into the printer.

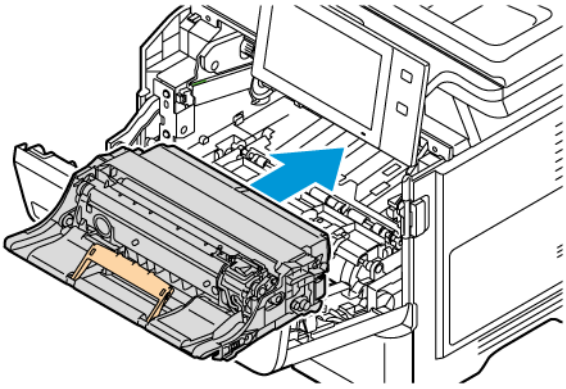

6. Insert the toner cartridge back into the printer.

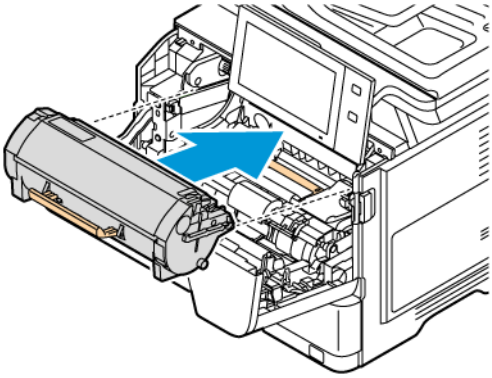

7. Close the front door, Door A.

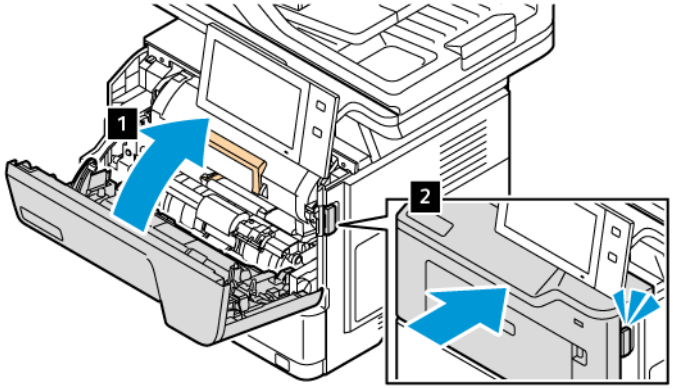

DUPLEX AUTOMATIC DOCUMENT FEEDER (DADF) ROLLER ASSEMBLY

Replacing the Duplex Automatic Document Feeder (DADF) Feed Rollers

To replace the feed rollers in the document feeder:

1. Power off the printer.
2. Open the top cover of the document feeder.

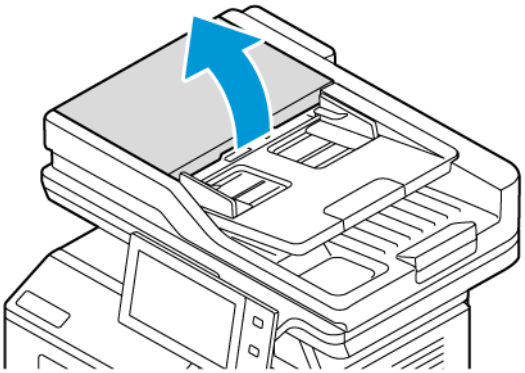

3. To remove the document feeder feed rollers, press its sides until it gets released, then take it out from the printer.

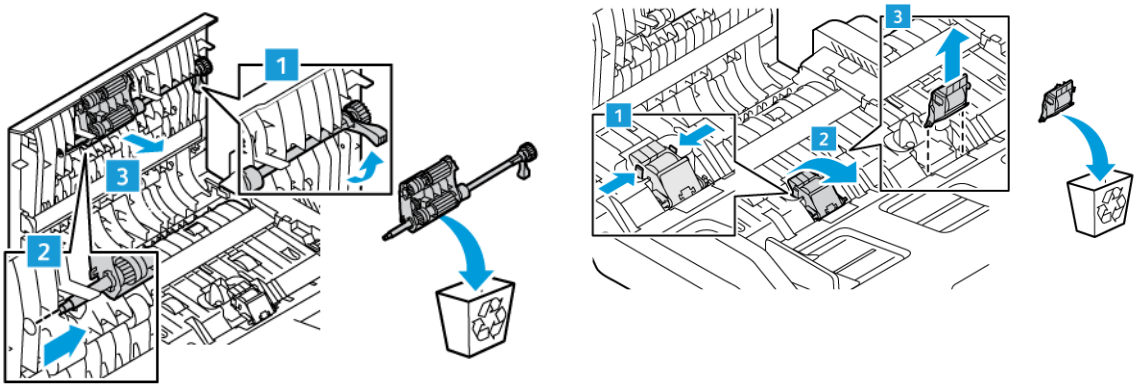

4. Unpack and insert the new feed rollers for the document feeder.

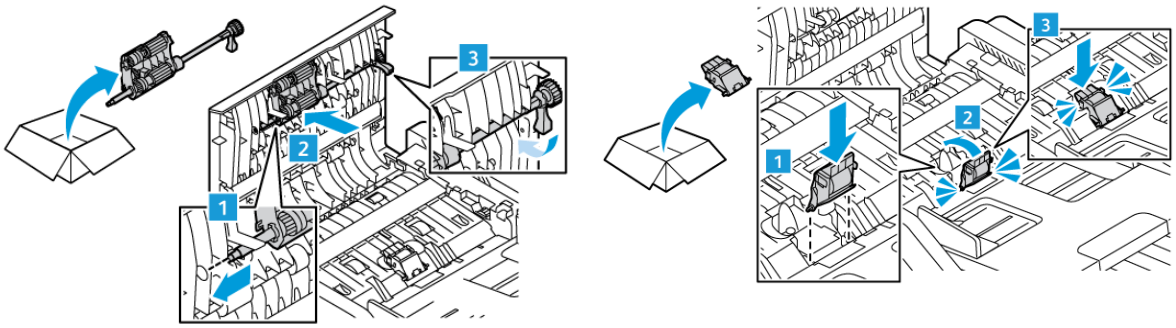

5. Close the top cover of the document feeder.

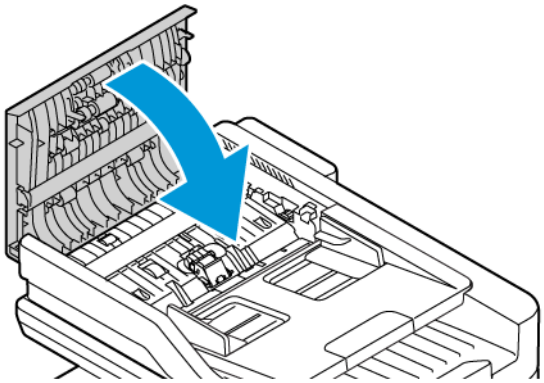

6. Power on the printer.

RECYCLING SUPPLIES

For information on Xerox® supplies recycling programs, go to www.xerox.com/gwa.

Supplies include a prepaid return label. Use it to return the used components in their original boxes for recycling.

RESETTING SUPPLY LIFE COUNTERS

You must reset the supply life counters when you replace some supplies.

1. At the printer control panel, press the **Home** button.
2. Touch the **Log In** button, enter the system administrator login information, then touch **Done**. For details, refer to the *System Administrator Guide* at www.xerox.com/office/VLB415docs.
3. Touch **Device > Tools > Device Settings > Supplies**.
4. Touch **Supply Counter Reset**.
5. To select an item to reset, touch the supply item in the list, then touch **Reset Counter**.
6. On the confirmation screen, touch **Reset**.
7. To return to the Tools screen, touch **X**, then touch **X** again.
8. To return to the Home screen, press the **Home** button.
9. Touch the **Log In** button, then touch **Logout**.

Managing the Printer

VIEWING THE METER READING

The Billing/Usage menu displays the total number of impressions that the printer generated or printed during its lifetime. You cannot reset the counters. A page is counted as one side of a sheet of paper. For example, a sheet of paper that is printed on two sides counts as two impressions.

Note: If you provide regular billing information for your device, you can use the Remote Services Upload feature to simplify the process. You can enable Remote Services to send billing meter readings to Xerox automatically so that you do not have to collect the readings manually. Refer to the System Administrator Guide for further information.

To view the billing information for your printer:

1. At the printer control panel, press the **Home** button.
2. Touch **Device > Billing/Usage**.
3. To view more details, touch **Usage Counters**, then select an option.
4. After viewing the usage readings, to return to the Device screen touch **X**, then touch **X** again.
5. To return to the Home screen, press the **Home** button.

PRINTING THE BILLING SUMMARY REPORT

The Billing Summary Report provides information about the device and a detailed listing of the billing meters and sheet counts.

To print the Billing Summary Report:

1. At the printer control panel, press the **Home** button.
2. Touch **Device > Information Pages**.
3. Touch **Billing Summary**, then touch **Print**.
4. To return to the Home screen, press the **Home** button.

Moving the Printer

- Always power off the printer and wait for the printer to shut down. To power off the printer, verify that there are no jobs in the queue, then press the secondary power switch. After the touch screen goes dark, wait 10 seconds, then power off the main power switch. For details, refer to Power Options.
- Disconnect the power cord from the back of the printer.
- To avoid spilling toner, keep the printer level.

Note: When moving the printer over a long distance, remove the toner cartridges to prevent toner from spilling. Package the printer into a box.

Warning: Failure to repackage the printer properly for shipment can result in damage not covered by the Xerox® Warranty or Service Agreement. The Xerox® Warranty or Service Agreement do not cover damage to the printer caused by improper moving.

Troubleshooting

This chapter contains:

General Troubleshooting 234
Paper Jams 242
Print, Copy, and Scan Problems 255
Fax Problems 264
Getting Help 267

General Troubleshooting

This section contains procedures to help you locate and resolve problems. Resolve some problems by simply restarting the printer.

RESTARTING THE PRINTER

The printer has one power switch. The power switch is the Power/Wake button on the control panel. The Power/Wake button controls power to the printer electronic components, and when powered off, initiates a software-controlled shutdown. The preferred method to power on and off the printer is to use the Power/Wake button.

To operate the printer, power on the switches:

1. Power on the main power switch that connects the printer to the power outlet.
2. At the control panel, press the **Power/Wake** button.

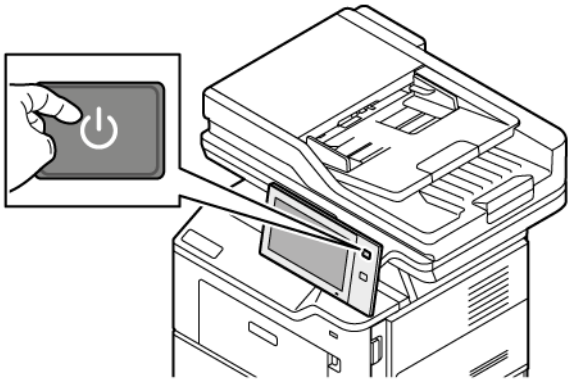

3. To restart the printer:
   a. At the control panel, press the **Power/Wake** button, then touch **Restart**. A message appears on the control panel that warns you that the printer is restarting.
   b. If the printer does not restart after several minutes, power off the main power switch. To restart the printer, power on the main switch, then press the **Power/Wake** button on the control panel.

If restarting the printer does not resolve the issue, see the table in this chapter that best describes the problem.

PRINTER DOES NOT POWER ON

PROBABLE CAUSES	SOLUTIONS
The power switch is not switched on.	• Check that the printer is connected to a power outlet. • At the printer control panel, press the **Power/Wake** button. For details, refer to Power Options.
The power cord is not plugged into the outlet correctly.	Power off the printer, then plug the power cord into the outlet securely. Use the bracket provided with the printer to secure the power cord in place.

PROBABLE CAUSES	SOLUTIONS
Something is wrong with the outlet connected to the printer.	• Plug another electrical appliance into the outlet and check if it operates properly. • Try a different outlet.
The printer is connected to an outlet with a voltage or frequency that does not match the printer specifications.	Use a power source with the specifications listed in the .

Warning: Plug the three-wire cord with grounding prong directly into a grounded AC outlet. Do not use a power strip. If necessary, contact a licensed electrician to install a properly grounded outlet.

PRINTER RESETS OR POWERS OFF FREQUENTLY

PROBABLE CAUSES	SOLUTIONS
The power cord is not plugged into the outlet correctly.	Power off the printer. Confirm that the power cord is plugged in correctly to the printer and the outlet, then power on the printer.
A system error occurred.	Power off the printer, then power on again. If the error persists, contact your Xerox representative.
The printer is connected to an uninterruptible power supply (UPS), extension cord, or power strip.	Only use an extension cord designed to handle the electrical current capacity of the printer. For details, refer to .
A network configuration problem exists.	Unplug the network cable. If the problem is not resolved, contact your system administrator to reconfigure your network installation.
The printer is connected to an outlet with a voltage or frequency that does not match the printer specifications.	Use a power source with the specifications listed in .

PRINTER DOES NOT PRINT

PROBABLE CAUSES	SOLUTIONS
The printer is in Power Saver mode.	On the control panel, press the **Power/Wake** button.
There is a printer error.	If the Status LED is blinking amber, there is an error.To clear the error, follow the instructions on the control panel. If the error persists, contact your Xerox representative.
The paper tray is empty.	Load paper into the tray.
The printer toner cartridge is empty.	Replace the toner cartridge.

PROBABLE CAUSES	SOLUTIONS
All control panel indicators are off.	Power off the printer, confirm that the power cord is plugged in correctly to the printer and the outlet, then power on the printer. If the error persists, contact your Xerox representative.
The printer is busy.	• If the Status LED is flashing blue, check if a previous print job is the problem. 1 At your computer, use the printer properties to delete all print jobs in the print queue. 2 At the control panel, touch **Jobs**, then delete all pending print jobs. • Load the paper in the tray. • If the Status LED does not flash once after you send a print job, check the connection between the printer and the computer. Power off the printer, then power on.
The printer cable is disconnected.	If the Status LED does not flash once after you send a print job, check the connection between the printer and the computer.
There is a wireless or network connectivity issue.	To test the printer, print an Information Page, such as the Basic Configuration Report. If the page prints, there could be a wireless or network connectivity issue. Contact your system administrator or refer to the *System Administrator Guide* at www.xerox.com/office/VLB415docs.
Incorrect print driver.	Check that you have the latest print driver installed. For details, go to www.xerox.com/office/VLB415support.

PRINTING TAKES TOO LONG

PROBABLE CAUSES	SOLUTIONS
The printer is set to print on a paper type that requires slower printing.	Certain paper type, like heavyweight paper takes more time to print. Ensure that the print driver and control panel are set to the proper paper type.
The printer is in Power Saver mode.	Wait. It takes time for printing to start after the printer exits Power Saver mode.

PROBABLE CAUSES	SOLUTIONS
The way the printer was installed on the network could be an issue.	• Determine if a print spooler or a computer sharing the printer is buffering all print jobs and then spooling them to the printer. Spooling can slow print speeds. • To test the speed of the printer, print multiple copies of an information page, such as a demo page. If the page prints at the rated speed of the printer, there could be a network or printer installation issue. For additional help, contact the system administrator.
The job is complex.	Wait. No action needed.

DOCUMENT FAILS TO PRINT

PROBABLE CAUSES	SOLUTIONS
Selected tray has wrong paper size loaded, or paper type or color is not available.	To view the Job Status for a failed print on the touch screen: 1 At the printer control panel, press the **Home** button. 2 Touch **Jobs**. 3 From the jobs list, touch the held job name. The resources required for the job appear on the control panel. 4 Do one of the following: • To print the job, replenish the resources required. The job resumes automatically when the required resources are available. If the job does not print automatically, touch **Resume**. • To choose an alternative paper source to enable the job to print, touch the name of held job, then touch **Print On Alternate Paper**. Select a paper tray, then touch **OK**. • To delete the print job, touch **Delete**. At the prompt, touch **Delete**. Note: The **Print On Alternate Paper** option is enabled using the Embedded Web Server. For details about the Print On Alternate Paper option, refer to the *System Administrator Guide* at www.xerox.com/office/VLB415docs. 5 To return to the Home screen, press the **Home** button.
Incorrect network settings.	To reset network settings, contact your system administrator or refer to the *System Administrator Guide* at www.xerox.com/office/VLB415docs.
The way the printer was installed on the network could be an issue.	• Ensure that the printer is connected to the network. • Determine if a print spooler or a computer sharing the printer is buffering all print jobs and then spooling them to the printer. Spooling can slow print speeds. • To test the printer, print an information page, such as the Basic Configuration Report. If the page prints, there could be a network or printer installation issue. For help, contact your system administrator.
Application and print driver have conflicting tray selections.	For details, see Document Prints from Wrong Tray.

DOCUMENT PRINTS FROM WRONG TRAY

PROBABLE CAUSES	SOLUTIONS
Application and print driver have conflicting tray selections.	1 Check the tray selected in the print driver. 2 Access the page setup or printer settings of the application from which you are printing. 3 Set the paper source to match the tray selected in the print driver or set the paper source to **Automatically Select**. 4 Check that you have the latest print driver installed. For details, go to www.xerox.com/office/VLB415support. Note: To have the print driver select the tray, set the tray used as the paper source to **Auto Selection Enabled**.

EMPTY OR PARTIALLY PRINTED DOCUMENT

PROBABLE CAUSES	SOLUTIONS
Packaging materials are not removed from the toner cartridge.	1 Ensure to remove the packaging materials from the toner cartridge. 2 Ensure that there is enough toner.

PRINTER IS MAKING UNUSUAL NOISES

PROBABLE CAUSES	SOLUTIONS
One of the trays is not installed correctly.	Open and close the tray from which you are printing.
There is an obstruction or debris inside the printer.	Power off the printer and remove the obstruction or debris. If you cannot remove the obstruction, contact your Xerox® service representative.
The printer beeps at each touch on the control panel.	Check the Alerts setting. For details, refer to the *System Administrator Guide* at www.xerox.com/office/VLB415docs.

AUTOMATIC 2-SIDED PRINTING PROBLEMS

PROBABLE CAUSES	SOLUTIONS
Unsupported or incorrect paper.	Ensure that you are using the correct paper. Do not use envelopes, or labels for automatic 2-sided printing. For details, see Supported Paper.
Incorrect setting.	On the print driver Printing Options tab, select **2-Sided Print**.

DATE AND TIME ARE INCORRECT

PROBABLE CAUSES	SOLUTIONS
The Date and Time Setup is set to Manual (NTP Disabled).	To change the Date and Time to Automatic, in the Embedded Web Server, enable NTP. For details, refer to the *System Administrator Guide* at www.xerox.com/office/VLB415docs.
The time zone, date, or time is set incorrectly.	Set the time zone, date, and time manually. For details, refer to the *System Administrator Guide* at www.xerox.com/office/VLB415docs.

SCANNER ERRORS

PROBABLE CAUSES	SOLUTIONS
Scanner is not communicating.	Power off the printer, and check the scanner cable. Wait two minutes and power on the printer again. If the problem is not resolved, contact your Xerox® service representative.

WIRELESS NETWORK ADAPTER PROBLEMS

PROBABLE CAUSES	SOLUTIONS
The device does not recognize the Wireless Network Adapter.	• Ensure that the Wireless Network Adapter is installed in an active USB port. For details, refer to the *System Administrator Guide* at www.xerox.com/office/VLB415docs. • If extension cable is used, ensure that it is attached to the Wireless Network Adapter correctly. • Ensure that the correct Wireless Network Adapter is installed. The compatibility of the Wireless Network Adapter is dependent on the device model and software version.
Degradation in performance has occurred.	Check the wireless signal strength for the Wireless Network Adapter. For details, refer to the *System Administrator Guide* at www.xerox.com/office/VLB415docs. If the wireless signal strength is low, do the following: • Place the wireless router or Access Point (AP) in a centralized location. • Position the Wireless Network Adapter closer to the AP, and ensure that the wireless router or AP is located away from walls or large metal objects. • Remove any physical obstructions between the AP and the Wireless Network Adapter, and ensure that the adapter is positioned away from walls or large metal objects. • Position the Wireless Network Adapter on the Xerox device in direct view of the wireless router or AP. • If applicable, consider upgrading the wireless router or AP to a high-gain antenna that transmits the wireless signals in one direction only.

Paper Jams

LOCATING PAPER JAMS

Caution: Parts that are near the fuser are hot. To prevent personal injury, never touch an area that has a Caution label. Power off the printer immediately, then wait 40 minutes for the fuser to cool. After the printer has cooled, try to remove the jammed paper. If the error on the control panel remains, contact your Xerox representative.

Warning: Do not attempt to clear any paper jams using tools or instruments. This action can damage the printer permanently.

The following illustration shows where paper jams can occur along the paper path:

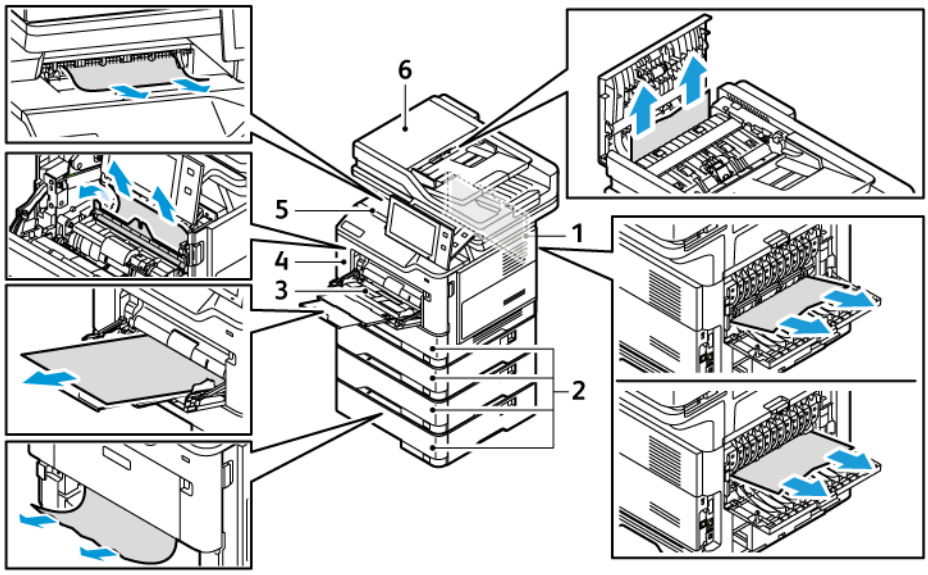

1. Door B, Back Door
2. Paper Trays 1–4
3. Bypass Tray
4. Door A, Front Door
5. Center Output Tray
6. Duplex Automatic Document Feeder (DADF)

MINIMIZING PAPER JAMS

The printer is designed to function with minimal paper jams using Xerox supported paper. Other paper types can cause jams. If supported paper is jamming frequently in one area, clean that area of the paper path. To avoid damage, always remove jammed paper carefully without tearing it. Try to remove the paper in the same direction it normally moves through the printer. Even a small piece of paper left in the printer can cause a jam. Do not reload paper that has jammed.

The following can cause paper jams:

- Using damaged paper.
- Using unsupported paper.
- Loading paper incorrectly.
- Overfilling the tray.
- Adjusting the paper guides improperly.

Most jams can be prevented by following a simple set of rules:

- Use only supported paper. For details, refer to Supported Paper.
- Follow proper paper handling and loading techniques.
- Always use clean, undamaged paper.
- Avoid paper that is curled, torn, moist, creased, or folded.
- To separate the sheets before loading into the tray, fan the paper.
- Observe the paper tray fill line; never overfill the tray.
- Adjust the paper guides in all trays after inserting the paper. A guide that is not properly adjusted can cause poor print quality, misfeeds, skewed prints, and printer damage.
- After loading the trays, select the correct paper type and size on the control panel.
- Store paper in a dry location.
- Use only Xerox paper designed for the printer.

Avoid the following:

- Polyester coated paper that is designed especially for inkjet printers.
- Highly glossy or coated paper, when they are not supported.
- Paper that is folded, wrinkled, or excessively curled.
- Loading more than one type, size, or weight of paper in a tray at the same time.
- Loading hole punched paper or paper with folded corners or staples in the document feeder.
- Overfilling the paper trays.
- Allowing the output tray to overfill.

CLEARING PAPER JAMS

To clear jams, watch the video and follow the instructions on the control panel. To resolve the error that appears on the control panel, remove all paper from the areas shown. If the error does not clear, check the jam areas again to ensure that all paper has been removed. Ensure that all levers, covers, and doors have been closed correctly.

To avoid damage, always remove jammed paper carefully without tearing it. Try to remove the paper in the same direction it normally moves through the printer. Even a small piece of paper left in the printer can cause a jam. Do not reload paper that has jammed.

Note: Do not touch the printed side of the paper when removing it. The printed side of jammed pages could smudge, and the toner could stick to your hands. Avoid spilling any toner inside the printer.

Caution: If you accidentally get toner on your clothes, lightly dust them off as best as you can. If some toner remains on your clothes, use cool water, not hot, to rinse off the toner. If toner gets on your skin, wash it off with cool water and a mild soap. If you get toner in your eyes, wash it out immediately with cool water and consult a doctor.

Duplex Automatic Document Feeder Jams

If a jam occurs in the duplex automatic document feeder areas, a message appears to indicate the areas that require clearing. To clear the jam, clear the areas indicated, then reload the jammed originals and the remaining original documents in the document feeder input tray. Do not put the original documents, that are scanned already, in the document feeder input tray.

If the original documents continue to jam, then for more information about the causes of document feeder jams and potential solutions, refer to Jams in the Document Feeder.

Clearing Jams in the Document Feeder

To clear paper jams in the Document Feeder:

Warning: Torn, wrinkled, or folded original documents can cause jams and damage the printer. To copy torn, wrinkled, or folded original documents, use the document glass.

1. Open the top cover of the document feeder.

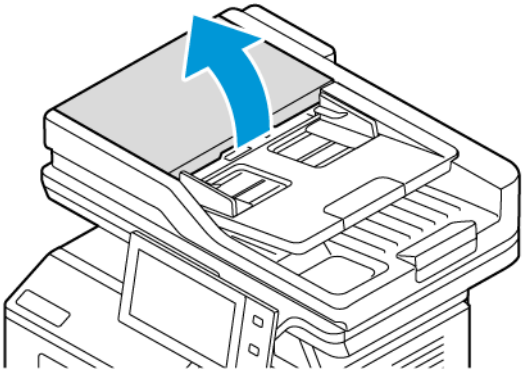

2. Remove the jammed paper.

Note: Ensure that all paper fragments are removed.

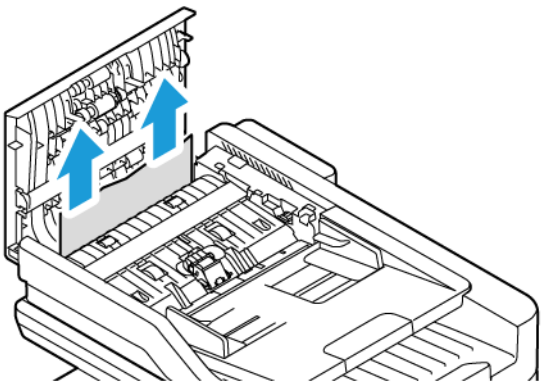

3. Close the document feeder top cover.

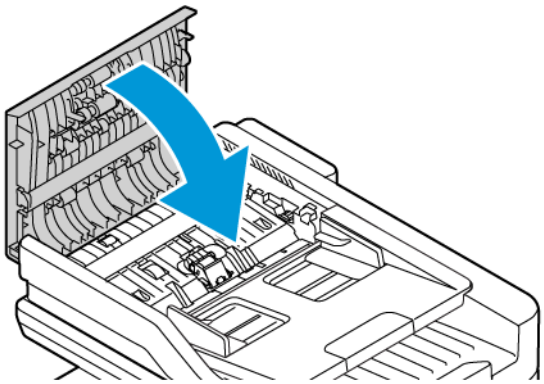

Paper Tray Jams

If a jam occurs in the paper tray areas, a message appears to indicate the areas or paper tray that requires clearing. To clear the jam, follow the instructions on the touch screen to locate the jammed paper, then clear the jam. When removing jammed paper from the device, remove the paper in the direction it was feeding, and take care not to leave any remnants of paper in the device.

After the paper tray jam has been cleared, the device continues printing the job from where the job stopped.

If further paper tray jams are experienced, try to load fresh paper in the paper tray. The paper could have excessive curl, excessive moisture, or be damaged.

For more information about paper jam causes and potential solutions, refer to Paper Misfeeds and Paper Size Jams.

Clearing Jams at Standard Trays 1–4

To clear the paper jams at Standard Trays 1–4:

1. Before you remove any tray from the printer, view the paper jam message on the control panel. Remove the jam that is shown on the control panel, then remove other paper jams.
2. Pull out the tray until it stops.

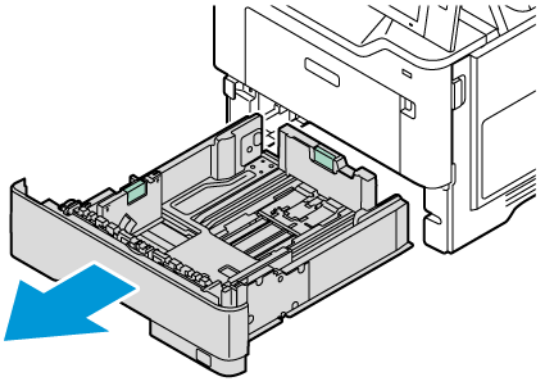

3. Remove the jammed paper from the tray.

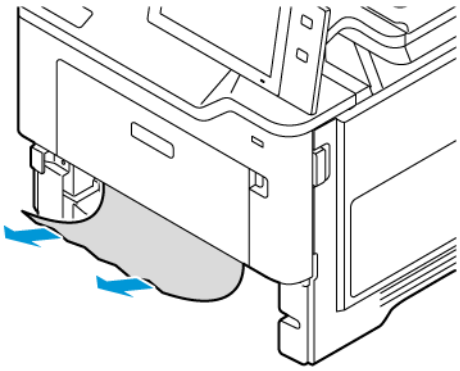

4. If the paper is torn, remove the tray completely, then check inside the printer for torn pieces of paper.
5. Reload the tray with undamaged paper, then push the tray in until it stops.
6. At the control panel, if a prompt appears, select the correct paper size, type, and color.
   - To select a new paper size, touch **Size**.
   - To select a new paper type, touch **Type**.
   - To select a new paper color, touch **Color**.
   - To confirm the settings, touch **Confirm**.

   Note: To configure settings when the prompt is displayed, update the **Required Paper Policies** in Embedded Web Server. For details, refer to the *System Administrator Guide* at www.xerox.com/office/VLB415docs.
7. To return to the Home screen, press the **Home** button.

Clearing Jams at Bypass Tray

To clear the paper jams at Bypass Tray:

1. Remove the jammed paper from the tray. Ensure that the paper feed entrance, where the tray connects to the printer, is clear.

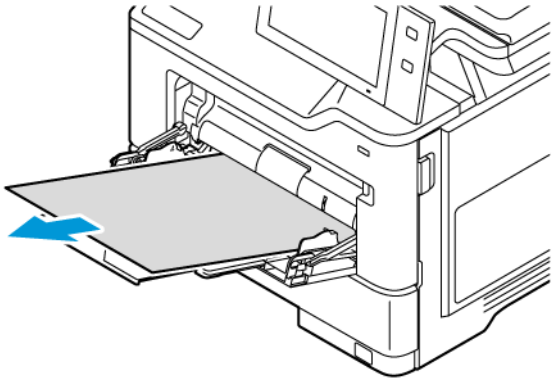

2. If the paper is torn, check inside the printer for torn pieces of paper.
3. Fan the paper that you removed and ensure that all four corners of the paper are aligned.

4. Insert the paper into Bypass Tray. Ensure that the leading edge of the paper touches the paper feed entrance.

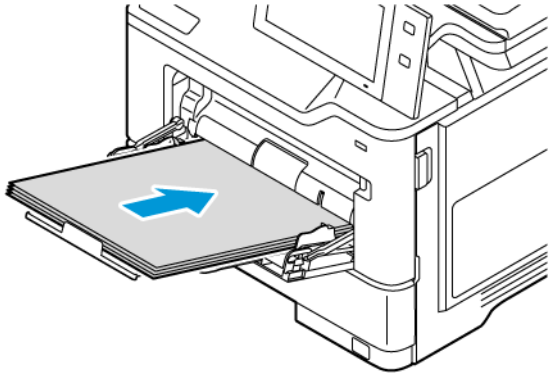

5. At the control panel, select the correct paper size, type, and color:
   - To select a new paper size, touch **Size**.
   - To select a new paper type, touch **Type**.
   - To select a new paper color, touch **Color**.
6. To confirm the settings, touch **Confirm**.

Clearing Jams at Door A

To clear paper jams from inside the printer front door, do the following:

1. Open the front door, Door A.

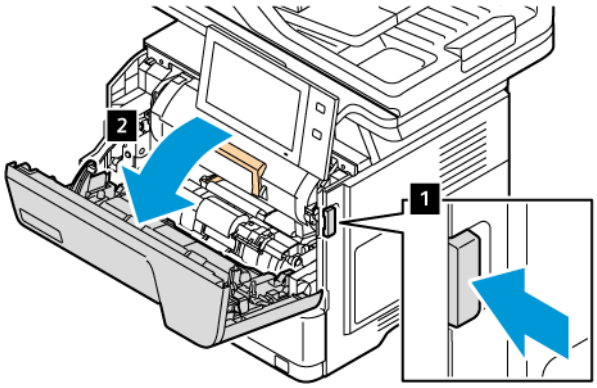

2. Remove the toner cartridge.

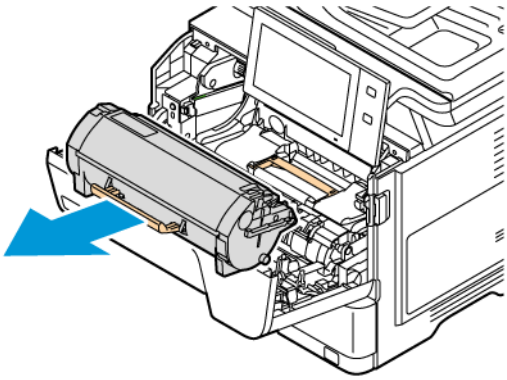

3. Remove the imaging unit, then remove the jammed paper.

Note: Ensure that all paper fragments are removed.

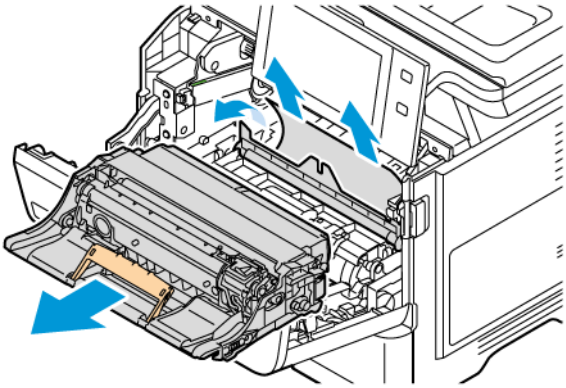

Warning: Do not expose the imaging unit to direct light for more than 10 minutes. Extended exposure to light may cause print quality problems.

Warning: Do not touch the shiny photoconductor drum under the imaging unit. Doing so may affect the quality of future print jobs.

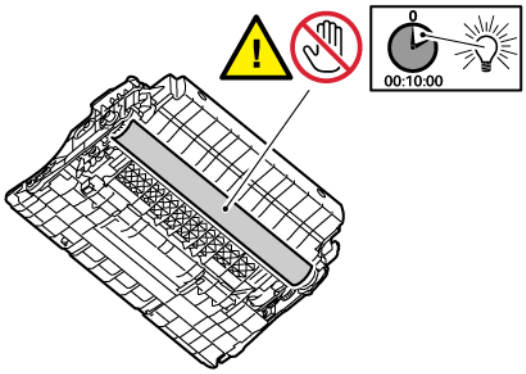

4. Insert the imaging unit back into the printer.

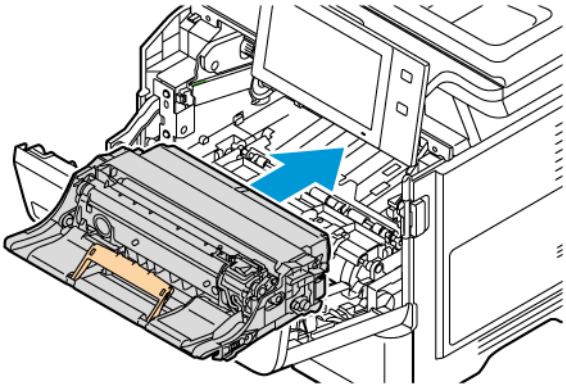

5. Insert the toner cartridge back into the printer.

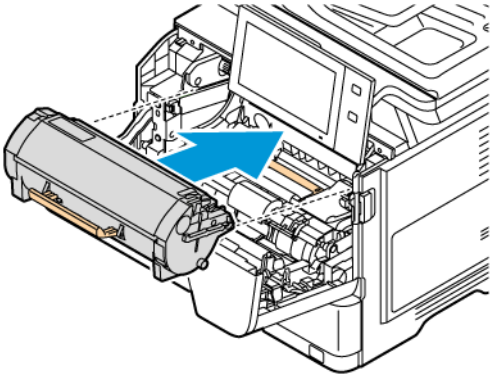

6. Close Door A.

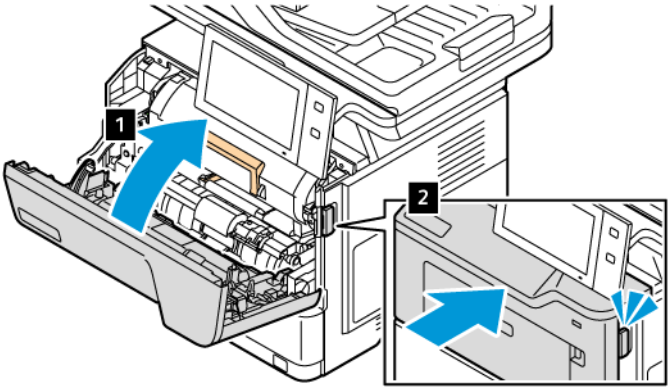

Clearing Jams at Door B

To clear the paper jams from inside the printer rear door, Door B, do the following:

1. Open the back door, Door B.

> **Caution:** The inside of the printer might be hot. To reduce the risk of injury from a hot component, allow the surface of the printer to cool down before touching.

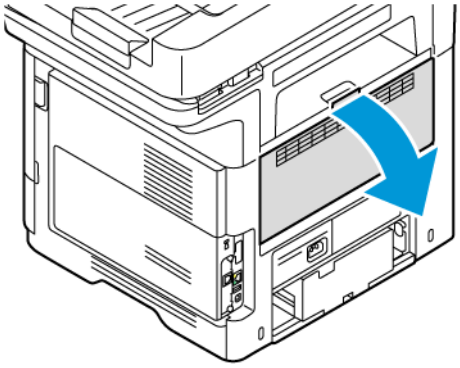

2. Remove the jammed paper that is present above the fuser assembly.

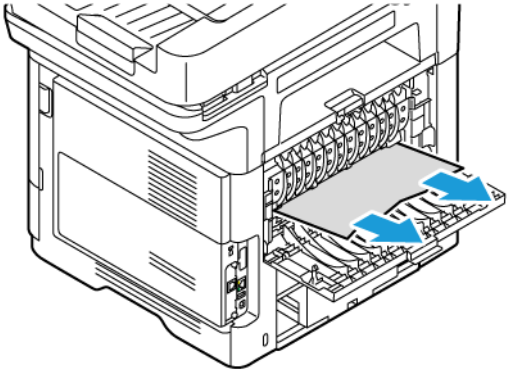

3. Remove the jammed paper that is present below the fuser assembly.

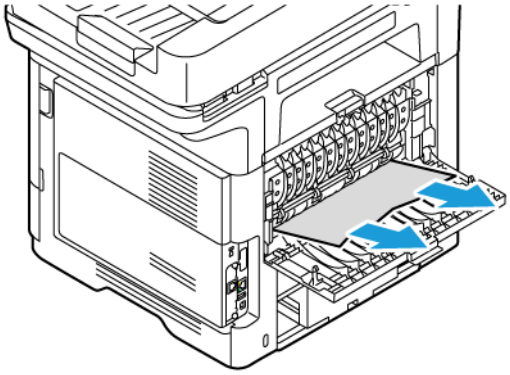

4. Close Door B.

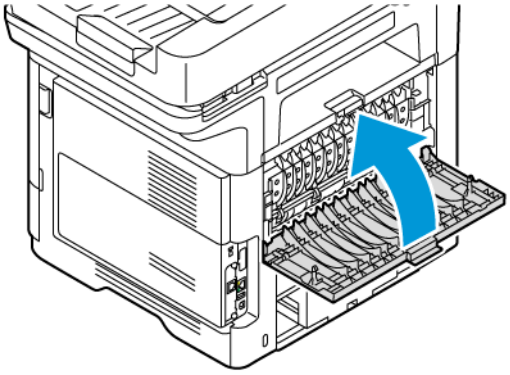

Clearing Jams at the Output Tray

At the Output Tray, remove the jammed paper.

Note: Ensure that all paper fragments are removed.

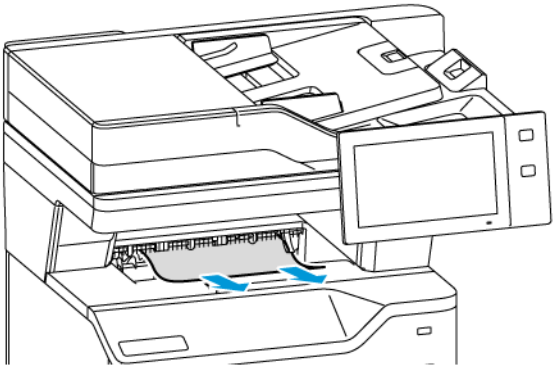

TROUBLESHOOTING PAPER JAMS

Multiple Sheets Pulled Together

PROBABLE CAUSES	SOLUTIONS
The paper tray is too full.	Remove some of the paper. Do not load paper past fill line.
The edges of the paper are not even.	Remove the paper, align the edges, and then reload it.
The paper is moist from humidity.	Remove the paper from the tray, and replace it with new dry paper.
Too much static electricity is present.	Try a new ream of paper

PROBABLE CAUSES	SOLUTIONS
Using unsupported paper.	Use only Xerox approved paper. For details, refer to Supported Paper.
Humidity is too high for coated paper.	Feed paper one sheet at a time.

Jams in the Document Feeder

PROBABLE CAUSES	SOLUTIONS
Unsupported paper of the wrong size, thickness, or type.	Use only Xerox-approved paper. For details, see Supported Paper.
Originals are torn, previously stapled, bent, or folded.	Ensure that the originals are not torn, bent, or folded. If previously stapled, remove all staples and separate the sheets by fanning them.
The documents loaded in the document feeder exceed the maximum capacity allowed.	Place fewer documents in the document feeder.
Improperly adjusted document feeder guides.	Adjust the paper guides to fit snugly against the paper loaded in the document feeder.

Paper Misfeeds and Paper Size Jams

PROBABLE CAUSES	SOLUTIONS
The paper is not correctly positioned in the tray.	• Remove the misfed paper and reposition it properly in the tray. • Adjust the paper guides in the tray to match the size of the paper.
The paper tray is too full.	Remove some of the paper. Do not load paper past the fill line.
The paper guides are not correctly adjusted to the paper size.	1 Remove the paper. 2 Adjust the paper guides in the tray to match the size of the paper. 3 Replace the paper.
The tray contains warped or wrinkled paper.	Remove the paper, smooth it out, and reload it. If it still misfeeds, do not use that paper.
The paper is moist from humidity.	Remove the moist paper and replace it with new, dry paper.
Using paper of the wrong size, thickness, or type.	Use only Xerox approved paper. For details, refer to Supported Paper.

Label and Envelope Misfeeds

PROBABLE CAUSES	SOLUTIONS
The label sheet is facing the wrong way in the tray.	Load label sheets according to the instructions from the manufacturer. Load labels face down with the bottom edge to the front of the tray in standard Trays 1–4. Load labels face up with the bottom edge toward the feed direction of the tray in Bypass Tray. For loading labels with correct orientation, refer to Labels.
Envelopes are loaded incorrectly or in the wrong tray.	Use Bypass Tray to print envelopes. Note: Envelopes are supported only in Bypass Tray. For loading envelopes with correct orientation, refer to Envelopes.
Envelopes are loaded incorrectly in Bypass Tray.	To load envelopes in Bypass Tray: • For envelopes with the flap on a long edge, load envelopes with the flaps face down and closed. Keep the flaps toward the left. • For envelopes with the flap on a short edge, load envelopes with the flaps face down and closed. Insert the envelopes with the flaps toward the feed direction. • For the custom-size envelopes, when the flap is on the short edge and the long edge is longer than 216 mm (8.5 in.), load envelopes with the flaps face down and closed. Insert the envelope with the flap toward the feed direction. For custom-size envelopes, define the custom size on the control panel. Note: Unless the long edge is longer than 216 mm (8.5 in.) or the short edge is less than the minimum width of the feeder, the flap of the envelop should always be to the left.

Paper Jam Message Stays On

PROBABLE CAUSES	SOLUTIONS
Some paper remains jammed in the printer.	Recheck the media path and make sure that you have removed all of the jammed paper.
One of the printer door is open.	Check the doors on the printer. Close any door that is open.

Note: Check for, and remove, torn pieces of paper in the paper path.

Jams During Automatic 2-Sided Printing

PROBABLE CAUSES	SOLUTIONS
Using paper of the wrong size, thickness, or type.	Use paper of the correct size, thickness, or type. For details, see Supported Paper.
Paper type is set incorrectly in the print driver.	Ensure that the paper type is set correctly in the driver and that the paper is loaded in the correct tray. For details, see Supported Paper.
Paper is loaded in the wrong tray.	Ensure that paper is loaded into the correct tray. For details, refer to Supported Paper.
Tray is loaded with mixed paper.	Load the tray with only one type and size of paper.

Print, Copy, and Scan Problems

IDENTIFYING PRINT, COPY, AND SCAN PROBLEMS

Problems with the output quality of your printer can be a print-related, copy-related, or scan-related problem. A quick test can help you to identify where a problem exists.

To identify if a problem is print-related or scan-related, do the following:

1. Print the *Getting Started* guide:
   a. At the printer control panel, press the **Home** button.
   b. Touch **Device**, then touch **Information Pages**.
   c. Touch **Getting Started**, then touch **Print**.
   d. To return to the Home screen, press the **Home** button.
2. Check the quality of the printed output.
3. If the print quality appears poor, the problem is print-related. For possible solutions, refer to Print-Quality Problems and Solutions.

   Note: Ensure that the packaging materials are removed from the toner cartridge.
4. If the print quality meets your requirements, the problem is likely to be scanner-related.
   a. Copy the *Getting Started* guide that you have printed.
   b. Check the quality of the copy output.
   c. For any symptom of poor scan quality, refer to Copy and Scan Problems.

PRINT-QUALITY PROBLEMS

Your printer is designed to produce consistently high-quality prints. If you observe print-quality problems, use the information in this section to troubleshoot the problem. For more information, go to www.xerox.com/office/VLB415support.

> **Warning:** The Xerox Warranty or Service Agreement does not cover damage caused by using unsupported paper or specialty media. For more information, contact your local Xerox representative.

Note: To ensure consistent print quality, the toner cartridges for many devices are designed to cease functioning at a predetermined point.

Controlling Print Quality

Various factors can affect the quality of the output of your printer. For consistent and optimum print quality, use paper designed for your printer, and set the paper type correctly. Follow the guidelines in this section to maintain optimum print quality from your printer.

Temperature and humidity affect the quality of the printed output. For details, refer to Environmental Specifications.

Paper and Media

Your printer is designed to use various paper and other media types. Follow the guidelines in this section for the best print quality and to avoid jams:

- Use only Xerox approved paper. For details, refer to Supported Paper.
- Use only dry, undamaged paper.

> **Warning:** Some paper and other media types can cause poor output quality, increased paper jams, or damage your printer. Do not use the following:
>
> - Rough or porous paper
> - Inkjet paper
> - Glossy or coated paper
> - Paper that has been photocopied
> - Paper that has been folded or wrinkled
> - Paper with cutouts or perforations
> - Stapled paper
> - Envelopes with windows, metal clasps, side seams, or adhesives with release strips
> - Padded envelopes
> - Plastic media
> - Iron-on transfer paper

- Ensure the paper type selected in your print driver matches the paper type on which you are printing.
- If you have the same size paper loaded in more than one tray, let the printer select the proper tray according to media and tray priority.
- Do not load more than one type, size, or weight of paper in the tray at a time.
- Store your paper and other media properly for optimum print quality. For details, refer to Paper Storage Guidelines.

Solving Print-Quality Problems

Your printer is designed to produce high-quality prints consistently. If you observe print-quality problems, use the information in this section to troubleshoot the problem. For more information, go to www.xerox.com/office/VLB415support.

> **Warning:** The Xerox Warranty or Service Agreement does not cover damage caused by using unsupported paper or specialty media. For more information, contact your local Xerox representative.

Note: To enhance the print quality, the toner cartridges for many models are designed to cease functioning at a predetermined point.

Printing the Troubleshooting Print-Quality Pages

1. At the printer control panel, press the **Home** button.

2. Touch **Device**.
3. Touch **Information Pages**.
4. To print procedures on resolving print-quality problems, touch **Troubleshooting Print Quality Page**, then touch **Print**.
5. Compare your print-quality problems to the examples on the pages.

Eliminating the Paper or Media as the Problem

Damaged or unsupported paper or media can cause print-quality problems even when the printer, application, and print driver are working perfectly. Use the following guidelines to eliminate the paper as the source of the print-quality problem:

- Make sure that the printer supports the paper or media.
- Make sure that the printer is loaded with undamaged, dry paper.
- If the condition of the paper or media is in doubt, replace it with new paper or media.
- Make sure that you have the proper tray selected in the print driver and from the control panel.
- Make sure that you have the correct paper type selected in the print driver and in the control panel of the printer.

Isolating the Problem to the Printer or to the Application

When you are sure that the paper is supported and in good condition, use the following steps to isolate the problem:

1. From the control panel of the printer, print the pages for Diagnosing Print Quality. For details, see Printing the Troubleshooting Print-Quality Pages.
   - If the pages printed properly, the printer is working properly and the print-quality problem is an application, print driver, or print server problem.
   - If the pages still have print-quality problems, the problem is in the printer.
2. If the pages printed properly, see Troubleshooting Print-Quality Problems in the Application, Print Driver, or Print Server.
3. If the pages still had print-quality issues, or did not print, see Troubleshooting Print-Quality Problems in the Printer.

Troubleshooting Print-Quality Problems in the Application, Print Driver, or Print Server

If the printer is printing properly from the control panel but you still have print-quality problems, the application, print driver, or print server could be the cause.

To isolate the problem:

1. Print a similar document from another application and look for the same print-quality problems.
2. If the document has the same print-quality problem, it is probably a print driver or print server problem. Check the print driver used for the print job.

a. Navigate to the list of printers on your computer:
   - For Windows Server 2012 and later, click **Start > Settings > Printers**.
   - For Windows 10, click **Start > Settings > Devices > Printers & scanners**.
   - For Windows 11 and later, click **Start > Settings > Bluetooth & devices > Printers & scanners**.

Note: If you are using a custom Start menu application, the application can change the navigation path to your list of printers.

b. Click on the name of the printer, then select **Printer properties**:
   - For Windows Server 2012 and later, right-click the icon for your printer, then click **Printing properties**.
   - For Windows 10, click the icon for your printer, then click **Manage > Printer properties**.
   - For Windows 11 and later, click the icon for your printer, then click **Printing preferences**.

c. Verify the following for your printer:
   - Ensure that the model name in the middle of the driver matches the model name of the printer.
   - If the names do not match, install the proper print driver for the printer.

3. If the problem persists, delete and reinstall the print driver.
4. If the document printed without a print-quality problem, the application is probably the cause. Restart your printer, restart the application, then print the document again. For more information, refer to Power Options.
5. If the problem still persists, ensure that you are not printing through a print server. If the problem persists, for online support information, go to www.xerox.com/office/VLB415support.

Troubleshooting Print-Quality Problems in the Printer

If you have print-quality problems when printing a Graphics Demo Page or the Basic Configuration Report from the control panel, the problem is in the printer.

To find the source of the problem:

1. At the control panel, print the Troubleshooting Print Quality Page. For details, refer to Printing the Troubleshooting Print-Quality Pages.
2. If the prints are too light to see print details, verify the following:
   - The printer is loaded with undamaged, dry supported paper.
   - The toner level of the toner cartridge is not too low.
3. Compare the print-quality problems in your document to each of the examples on the Troubleshooting Print Quality Page.

If you find a match on the Troubleshooting Print Quality Page, look in the Solutions column for the action to take to resolve the problem.

If the problem persists, for online support information, go to www.xerox.com/office/VLB415support.

Print-Quality Problems and Solutions

Use the following table to find solutions to print-quality problems. When the print quality is poor, to correct the problem, select the closest symptom from the following table and refer to the corresponding solution.

Note: At the printer control panel, press the **Home** button. Touch **Device > Information Pages > Troubleshooting Print Quality Page > Print**.

SYMPTOM	SOLUTIONS
The output is too light. 	• To check the toner level, check the control panel, or use the print driver or the Embedded Web Server. If the toner cartridge is near empty, replace it. For details, refer to Replacing the Toner Cartridge. • Verify that the toner cartridge is approved for use in this printer, and replace the toner cartridge, as needed. For best results, use a Genuine Xerox toner cartridge. • Replace the paper with a recommended size and type, and confirm that your printer and print driver settings are correct. • Verify that the paper is dry and that supported paper is used. If not, change the paper. • Change the paper type settings in the print driver. In the print driver, on the Printing Options tab, select **Paper**, then change the **Other Type** setting. • Verify the Print Quality setting in the print driver. In the print driver, on the Printing Options tab, ensure that the Print Quality is set to **Standard**. • Change the Darken Image setting. For details, refer to the *System Administrator Guide* at www.xerox.com/office/VLB415docs.
Toner smears or the print rubs off. The output has stains on the back side. 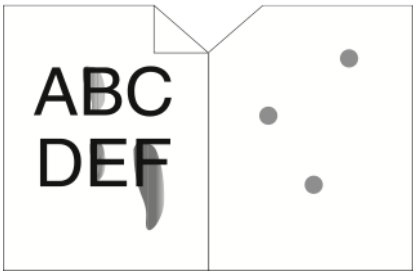 	• Change the paper type settings in the print driver. For example, change Plain to Lightweight Cardstock. In the print driver, on the Printing Options tab, select **Paper**, then change the Other Type setting. • Verify that the paper is the correct size, type, and weight. If not, change the paper settings. • Verify that the printer is plugged in to an outlet that is providing the correct voltage and power. Review the electrical specification of the printer with an electrician, if necessary. For details, refer to . • Check the toner level. To check the toner level, check the control panel, or use the print driver or the Embedded Web Server. For details, refer to Supply Status. If the toner cartridge is near empty, replace it. For details, refer to Replacing the Toner Cartridge.
Random spots appear on the output, or the image is blurry.	• Ensure that the toner cartridge is installed correctly. • If you used a non-genuine brand toner cartridge, install a Genuine Xerox toner cartridge.

SYMPTOM	SOLUTIONS
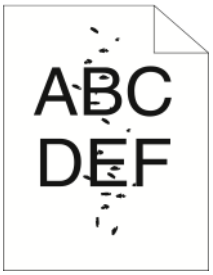	• Use the Rough paper type setting or try a paper with a smoother surface. • Ensure that the humidity in the room is within specifications. For details, refer to Relative Humidity. • Replace the toner cartridge.
The output is blank. 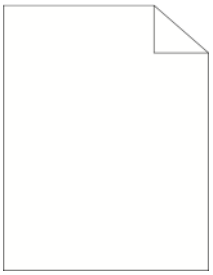	• Power off the printer, then power on again. • Remove, then re-install the toner cartridge. • Replace the toner cartridge. • If the error persists, contact your Xerox representative.
Black or white streaks appear on the output. 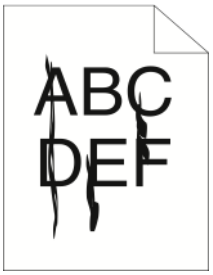	• Replace the toner cartridge. • If the error persists, contact your Xerox representative.
The output has a mottled appearance. 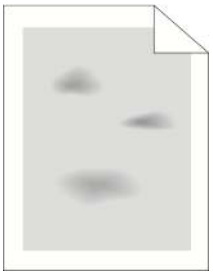	• Verify that the paper is the correct size, type, and weight. If not, change the paper settings. • Ensure that the humidity in the room is within specifications. For details, refer to Relative Humidity. • Choose a different paper type at the control panel, in the application, and in the print driver. • Replace the paper. • If the error persists, contact your Xerox representative.
Ghosting appears on the printed output.	• Verify that the paper is the correct size, type, and weight. If not, change the paper settings. • Change the Paper Type settings in the print driver. In the print driver, on the Printing Options tab, select **Paper**, then change the Other Type setting. • Replace the toner cartridge. For details, refer to Replacing the Toner Cartridge.

SYMPTOM	SOLUTIONS
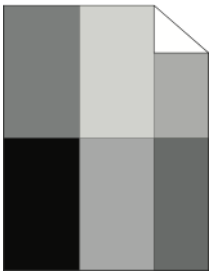	• If the error persists, contact your Xerox representative.
Auger marks appear on the printed output.	• To check the toner level, check the control panel, or use the print driver or the Embedded Web Server. For details, refer to Supply Status. If the toner cartridge is near empty, replace it. • Verify that the toner cartridge is approved for use in this printer, and replace the toner cartridge, as needed. For best results, use a Genuine Xerox toner cartridge. • Replace the toner cartridge. For details, refer to Replacing the Toner Cartridge. • If the error persists, contact your Xerox representative.
The output print is wrinkled or stained.	• Verify that the paper is the correct size, type, and weight for the printer and that the paper is loaded properly. If not, change the paper. • Try a new ream of paper. • Change the Paper Type settings in the print driver. In the print driver, on the Printing Options tab, select **Paper** then change the Other Type setting.
Envelopes are wrinkled or creased when printed.	Verify that the crease is within 30 mm (1.2 in.) of the four edges of the envelope. • If yes, the printer is printing as expected. Your printer is not faulty. • If not, take the following actions: – Ensure that only C5 envelopes are loaded in Bypass Tray. – Ensure that envelopes are loaded properly in Bypass Tray. For details, refer to Loading Envelopes in the Bypass Tray. – Follow the guidelines for printing on envelopes. For details, refer to Guidelines for Printing Envelopes.

SYMPTOM	SOLUTIONS
The top margin is incorrect. 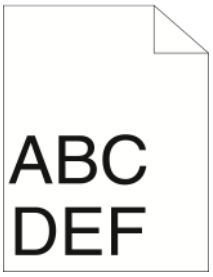 	• Ensure that the paper is loaded properly. • Ensure that the margins are set correctly in the application that you are using.
The printed surface of the paper is bumpy. 	Clean the fuser rollers: 1 Print a solid image over the entire surface of one sheet of paper. 2 Load the printed sheet into the tray with the printed side face down. 3 To remove debris from the fuser rollers, pint five blank pages.

COPY AND SCAN PROBLEMS

Your printer is designed to produce consistently high-quality scans and copies. If you observe quality problems, use the information in this section to troubleshoot the problem. For more information, go to www.xerox.com/office/VLB415support.

> **Warning:** The Xerox Warranty or Service Agreement does not cover damage caused by using unsupported paper or specialty media. For more information, contact your local Xerox representative.

Copy and Scan Problems and Solutions

If the copy or scan quality is poor, refer to the following table:

SYMPTOMS	SOLUTIONS
Lines or streaks only present in copies made from the document feeder.	There is debris on the document glass. During scanning, the paper from the document feeder passes over the debris, which creates lines or streaks. Clean all glass surfaces with a lint-free cloth.
Spots present in copies made from the document glass.	There is debris on the document glass. When scanning, the debris creates a spot on the image. Clean all glass surfaces with a lint-free cloth.
The reverse side of the original document shows on the copy or scan.	Enable Background Suppression.

SYMPTOMS	SOLUTIONS
The image is too light or too dark.	Adjust the Lighten/Darken or Contrast settings.
Other print-quality problems related to dark or light prints.	Perform the **Toner Darkness Control** routine: 1 At the printer control panel, touch **Device > Tools**. 2 Touch **Device Settings > General > Toner Darkness Control**. 3 At the Toner Darkness page, make darkness adjustments as required, then touch **OK**. Note: This setting is applicable only to jobs received from Print or Fax Apps.

If the problem persists, for online support information, go to www.xerox.com/office/VLB415support.

Performing Scanner Manual Registration

When the scanned output on physical or digital copies are not centered, perform Scanner Manual Registration.

SYMPTOMS	SOLUTIONS
Scanned output on physical or digital copies are not centered	Contact your System Administrator to perform **Scanner Manual Registration**: 1 Log in as System Administrator. 2 At the printer control panel, touch **Device > Tools**. 3 Touch **Troubleshooting > Calibration > Scanner Manual Registration**, then make adjustments as required. Ensure the original documents that you are scanning, are centered on the Document Glass or in the Document Feeder. For more information, refer to *System Administrator Guide* at www.xerox.com/office/VLB415docs.

If the problem persists, for online support information, go to www.xerox.com/office/VLB415support.

Fax Problems

If your printer cannot send and receive faxes, ensure that the printer is connected to an approved analog telephone line. The fax machine cannot send or receive faxes when it is connected directly to a digital telephone line without the use of an analog filter.

Note: If the fax connection is poor, transmit the fax at a lower rate. For the Starting Rate, select **Forced** (4800 bps).

PROBLEMS SENDING FAXES

SYMPTOMS	PROBABLE CAUSES	SOLUTIONS
The document is not feeding properly through the document feeder.	The document is too thick, too thin, or too small.	Use the document glass.
The document is scanned at an angle.	The document feeder width guides are not adjusted to fit the width of the document.	Adjust the document feeder width guides so that they fit against the document.
The fax received by the recipient is blurry.	The document is positioned incorrectly.	Position the document correctly.
	The document glass is dirty.	Clean the document glass.
	The text in the document is too light.	Adjust the resolution. Adjust the contrast.
	There is a problem with the telephone connection.	Verify that the telephone line is working, then send the fax again.
	There is a problem with one of the fax machines.	Make a copy to verify that the printer can make clean copies and prints. If the copy prints correctly, have the recipient verify that their fax machine is operating correctly.
The fax received by the recipient is blank.	The document was loaded incorrectly.	If using the document feeder, place the original document face up. If using the document glass, place the original document face down.
Fax was not transmitted.	The fax number is wrong.	Verify the fax number.
	The telephone line is connected incorrectly.	Verify the telephone line connection. If the telephone line is disconnected, connect it.
	There is a problem with the fax machine of the recipient.	Contact the recipient.
	The fax feature is not installed or is	Ensure that the fax feature is

SYMPTOMS	PROBABLE CAUSES	SOLUTIONS
	not enabled.	installed and enabled.
	Server fax is enabled.	Ensure that server fax is disabled.
	An access number is required to connect to an outside line.	If the printer is connected to a PBX system, it could be necessary to enter a number to access the outside telephone line.
	The fax number needs a pause between the prefix for an outside line and the telephone number.	To insert a pause, touch the **Dial Pause** button. A comma (**,**) appears in the corresponding location.

If the problem persists, for online support information, go to www.xerox.com/office/VLB415support.

PROBLEMS RECEIVING FAXES

SYMPTOMS	PROBABLE CAUSES	SOLUTIONS
The fax received by the recipient is blank.	There is a problem with the telephone connection or with the fax machine of the sender.	Verify that the printer can make clean copies. If it can, have the sender fax the document again.
	The sender loaded the pages incorrectly.	Contact the sender.
The printer answers the call but does not print the fax.	The memory is full.	To increase available memory, delete stored jobs and wait for the existing jobs to complete.
The received fax size is reduced in size.	The paper supply in the printer does not match the document size sent.	Confirm the original size of the documents, then load the appropriate paper size in the printer.
Faxes are not received automatically.	The printer is set to receive faxes manually.	Set the printer to receive faxes automatically.
	The memory is full.	If the printer is out of paper, faxes and print jobs can deplete the printer of memory. Load paper and print the jobs stored in the memory.
	The telephone line is connected incorrectly.	Verify the telephone line connection. If the telephone line is disconnected, connect it.

SYMPTOMS	PROBABLE CAUSES	SOLUTIONS
	There is a problem with the fax machine of the sender.	Make a copy to verify that the printer can make clean copies and prints. If the copy prints correctly, have the recipient verify that their fax machine is operating correctly.

If the problem persists, for online support information, go to www.xerox.com/office/VLB415support.

PRINTING FAX REPORTS

You can print the following fax reports from the printer control panel:

- Activity Report
- Protocol Report
- Fax Address Book Report
- Options Report
- Pending Jobs Report

For instructions on how to print fax reports, refer to the *System Administrator Guide* at www.xerox.com/office/VLB415docs.

Getting Help

Xerox provides several automatic diagnostic utilities to help you maintain productivity and print quality.

VIEWING ERROR AND ALERT MESSAGES ON THE CONTROL PANEL

When an error or warning condition occurs, the printer alerts you of the problem. A message appears on the control panel and the LED status light on the control panel flashes amber or red. Alerts inform you about printer conditions, such as low supplies or open doors that require your attention. Error messages warn you about printer conditions that prevent the printer from printing or degrade printing performance. If more than one condition occurs, only one appears on the control panel.

To view a complete list of active error and alert messages:

1. At the printer control panel, press the **Home** button.
2. Touch **Device**.
3. Touch **Notifications**.
4. Touch **Faults & Alerts**, **Alerts**, or **Faults**.
5. To view details, touch a fault or alert.
6. To exit the Notifications screen, touch **X**.
7. To return to the Home screen, press the **Home** button.

VIEWING THE ERROR HISTORY ON THE CONTROL PANEL

When errors occur on the device, they are logged into an error history file by date, time, and associated fault code. You can use this list to identify trends and resolve problems.

To view the error history:

1. At the printer control panel, press the **Home** button.
2. Touch **Device**.
3. Touch **Notifications**.
4. Touch **Fault History**.
5. To exit, touch **X**.
6. To exit the Notifications screen, touch **X**.
7. To return to the Home screen, press the **Home** button.

SUPPORT LOGS

Use the Support Logs feature only if a Xerox service representative instructs you to do so.

Log files are text files of recent device activity that are created and stored in the device in an encrypted format. A Xerox service representative can interpret the files to troubleshoot network problems.

Note: Support logs can include screenshots that are taken at the device control panel.

To capture a screenshot at the control panel, press the **Power** button, then touch the lower-left corner of the screen. After the screenshot is taken, the file name of the image appears on the screen. The file name includes the date, time, and serial number of the device.

Note: The device can capture most screens. When pop-up windows are displayed, the device sometimes captures the underlying screen only.

The screenshot images are stored with the log files. The device can store up to three screenshots for a maximum of 7 days. After 7 days, the files are deleted. If more than three screenshots are taken, the older files are deleted.

The Enhanced Logging feature enables the device to capture additional logs for specific functions or activities. A Xerox service representative can use the additional logs to investigate non-repeatable or intermittent device issues.

Note: The device supports enhanced logging for a maximum of three features at a time and also supports increased data analysis.

For information about configuring support log settings, refer to the *System Administrator Guide* at www.xerox.com/office/VLB415docs.

THE EMBEDDED WEB SERVER

The Embedded Web Server is the administration and configuration software that is installed in the printer. It allows System Administrators to modify network and system settings on the printer remotely using a Web browser.

You can check the status of the printer, monitor paper and supply levels, and submit and track print jobs. All these functions can be accessed from the convenience of your computer.

The Embedded Web Server requires:

- A TCP/IP connection between the printer and the network in Windows, Macintosh, UNIX, or Linux environments.
- TCP/IP and HTTP enabled in the printer.
- A network-connected computer with a Web browser that supports JavaScript.

ONLINE SUPPORT ASSISTANT

The Online Support Assistant is a knowledge base that provides instructions and troubleshooting help to solve your printer problems. You can find solutions for print-quality problems, paper jams, software installation issues, and more.

To access the Online Support Assistant, go to www.xerox.com/office/VLB415support.

INFORMATION PAGES

Your printer has a set of information pages that you can print. These pages include configuration and font information, getting started pages, and more.

The following Information Pages are available:

NAME	DESCRIPTION
Basic Configuration Report	The Basic Configuration Report provides printer information, including the serial number, installed options, network settings, port setup, tray information, and more.
Detailed Configuration Report	The Detailed Configuration Report provides information about all of the printer settings, including extensible services setup, security and authentication server configuration, connectivity settings, and more.
Billing Summary	The Billing Summary Report provides information about the device and a detailed listing of the billing meters and sheet counts.
Getting Started	The *Getting Started* guide provides an overview of the key features of the printer.
Troubleshooting Print Quality Page	The Troubleshooting Print Quality Page provides a list of common print-quality problems and tips to help solve them.
Supplies Usage Page	The Supplies Usage Page provides coverage information and part numbers for reordering supplies.
Graphics Demo Page	Print this page to check the quality of graphics.
PCL Font List	The PCL Font List provides a printout of all PCL fonts that are available on the printer.
PostScript Font List	The PostScript Font List provides a printout of all PostScript fonts that are available on the printer.

Printing Information Pages

1. At the printer control panel, press the **Home** button.
2. Touch **Device > Information Pages**.
3. To print an information page, touch the needed page, then touch **Print**.

   The printer prints the selected information page.
4. To return to the Home screen, press the **Home** button.

MORE INFORMATION

You can obtain more information about your printer from these sources:

RESOURCE	LOCATION
Installation Guide	Packaged with the printer.
Getting Started guide	Print from the control panel. For details, refer to Information Pages.
Other documentation for your printer	www.xerox.com/office/VLB415docs
Recommended Media List	United States: www.xerox.com/rmlna European Union: www.xerox.com/rmleu
Technical support information for your printer, including online technical support, Online Support Assistant, and print driver downloads.	www.xerox.com/office/VLB415support
Information Pages	Print from the control panel. For details, refer to Information Pages.
Embedded Web Server information	In the Embedded Web Server, click **Help**.
Order supplies for your printer	www.xerox.com/office/supplies
A resource for tools and information, including interactive tutorials, printing templates, helpful tips, and customized features to meet your individual needs.	www.xerox.com/office/businessresourcecenter
Local sales and Technical Customer Support	www.xerox.com/office/worldcontacts
Printer registration	www.xerox.com/register
Xerox® Direct online store	www.direct.xerox.com/

Locating the Serial Number

When you order supplies or contact Xerox for assistance, you need the serial number of your device. You can obtain the serial number in several ways. To locate the serial number, print a configuration report, or view the serial number on the control panel or on the Embedded Web Server home page. The serial number is printed on a label that is affixed to the printer. To view the label, open Door A.

For details on how to print a configuration report, refer to Information Pages.

To view the serial number on the control panel:

1. At the printer control panel, press the **Home** button.
2. Touch **Device > About**.

   The model, serial number, and software version is displayed.
3. To return to the Home screen, press the **Home** button.

Specifications

This appendix contains:

Printer Configurations and Options 272
Physical Specifications 275
Clearance Requirements 278
Environmental Specifications 281
Electrical Specifications 282
Performance Specifications 283
Environmental, Health and Safety Contact Information 284

Printer Configurations and Options

STANDARD FEATURES

The printer provides the following features:

- Copy, Print, Email, Scan, and Server Fax
- Scan to USB and Print from USB mass storage devices
- Workflow Scanning with Scan to Mailbox, Scan to Network, and Scan to Home
- 1–Touch Apps for Copy, Email, Scan To, Fax, Single Touch and Scan
- Searchable PDF, Single or Multiple-Page PDF or XPS, or TIFF, Encrypted or Password-Protected PDF, and Linearized PDF or PDF/A file formats
- Print speed up to 47 ppm for A4 (210 x 297 mm) and 50 ppm for Letter (8.5 x 11 in.)
- 1200 x 1200 dpi imaging and copying quality
- Copy and Print document sizes up to Legal (215.9 x 355.6 mm, 8.5 x 14 in.)
- Automatic 2-sided printing
- Duplex Automatic Document Feeder
- Color touch screen control panel
- Tray 1, Standard 550-sheet Tray
- Optional Trays 2–4 each with 550-sheet capacities
- Bypass Tray with 100-sheet capacity
- 2-GByte DDR3 system memory
- Internal 32-GByte embedded Multi-Media Card (eMMC)
- Ethernet 10/100/1000Base-TX
- High-Speed USB 2.0 direct print
- Adobe® PostScript® and PCL® fonts and support
- Xerox® Global Print Driver and Xerox® Pull Print Driver support
- Automated supplies replenishment and management using Xerox® MeterAssistant®, Xerox® SuppliesAssistant®, and Maintenance Assistant
- Remote driver installation
- Remote Control, Backup and Restore, and Configuration Cloning
- Bonjour device discovery
- Xerox® Standard Accounting
- Encrypted Secure Print, Secure Fax, Secure Scan, and Secure Email
- Xerox® Extensible Interface Platform
- Xerox® Earth Smart Driver settings

- Embedded Web Server
- Email alerts
- Support for mobile printing, mobile printing connectivity, and mobile apps
- Support for Xerox® Easy Assist App
- Support for Xerox® App Gallery
- Support for NFC printing
- Support for Mopria
- Support for AirPrint

OPTIONS AND UPGRADES

- Convenience Stapler
- Fax forward to Email or SMB software
- Xerox Secure Access Unified ID System
- CAC and PIV Card Reader Enablement Kit
- Xerox® Network Accounting Enablement
- Productivity Kit (500+ GB Hard Disk Drive)
- RFID Card Reader Kit
- SIPRNet Enablement Kit
- Software for Unicode print
- Xerox® Scan to PC Desktop® Professional software
- Wireless Network Adapter with Bluetooth which provides wireless network connectivity, Wi-Fi Direct connectivity, and iBeacon for AirPrint discovery

Note: For AirPrint® discovery, the connection is made through Bluetooth low energy beacon.

FINISHING OPTIONS

OUTPUT DEVICE	CAPACITY	SIZES	WEIGHTS	FINISHING OPTIONS
Center Tray	250 sheets	All supported sizes For information on supported sizes, refer to Supported Paper.	All supported weights For information on supported weights, refer to Supported Paper.	Not Applicable
Convenience Stapler	20 sheets	Any supported size For information on supported sizes, refer to Supported Paper.	Any supported weight For information on supported weights, refer to Supported Paper.	Maximum 20 sheets for standard 20 lb. paper

Note: Sheet quantities for tray capacities and finishing options are based on 75 g/m^2. Quantities are reduced for heavier media and must be within the specified weight range.

Physical Specifications

BASE CONFIGURATION

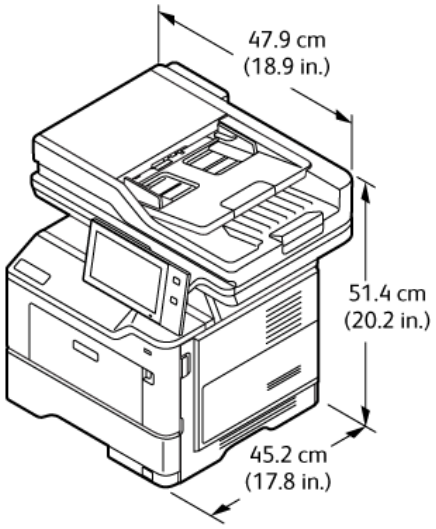

- Width: 47.9 cm (18.9 in.)
- Depth: 45.2 cm (17.8 in.)
- Height: 51.4 cm (20.2 in.)
- Weight: ≤21.7 kg (47.9 lb.)

BASE CONFIGURATION WITH PRINTER STAND

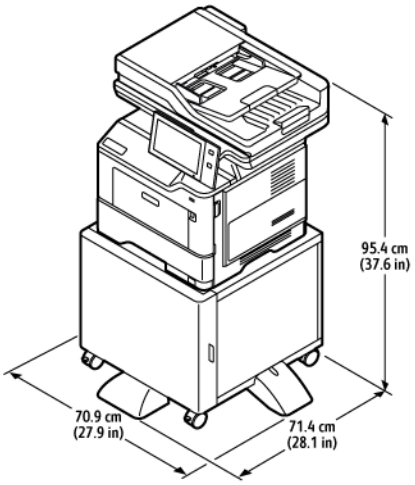

- Width: 70.9 cm (27.9 in.)
- Depth: 71.4 cm (28.1 in.)
- Height: 95.4 cm (37.6 in.)
- Weight: ≤ 36.5 kg (80.5 lb.)

Note: The weight of the printer stand is 14.8 kg (32.7 lb.).

BASE CONFIGURATION WITH 3–OPTIONAL STANDARD TRAY MODULES

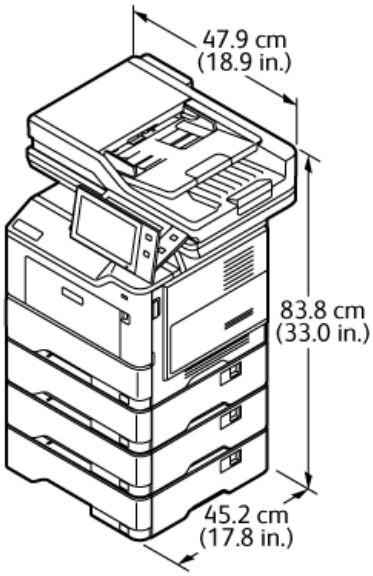

- Width: 47.9 cm (18.9 in.)
- Depth: 45.2 cm (17.8 in.)
- Height: 83.8 cm (33.0 in.)
- Weight: ≤ 35.8 kg (78.9 lb.)

CONFIGURATION WITH OPTIONAL TRAYS AND PRINTER STAND

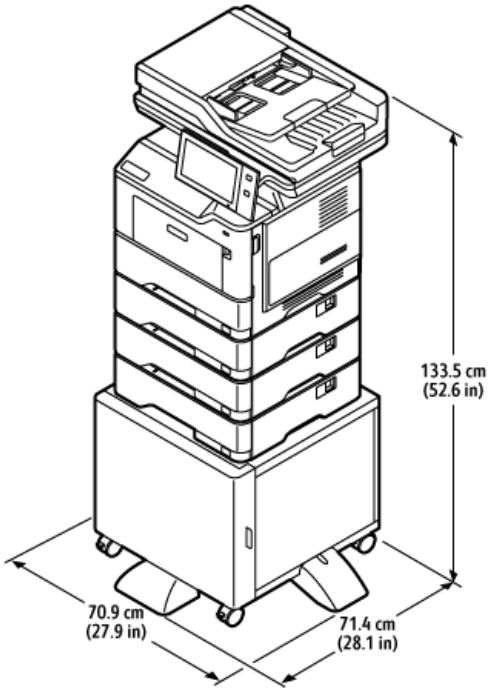

- Width: 70.9 cm (27.9 in.)
- Depth: 71.4 cm (28.1 in.)
- Height: 133.5 cm (52.6 in.)
- Weight: ≤ 50.6 kg (111.6 lb.)

Note: The weight of the printer stand is 14.8 kg (32.7 lb.).

Clearance Requirements

BASE CONFIGURATION

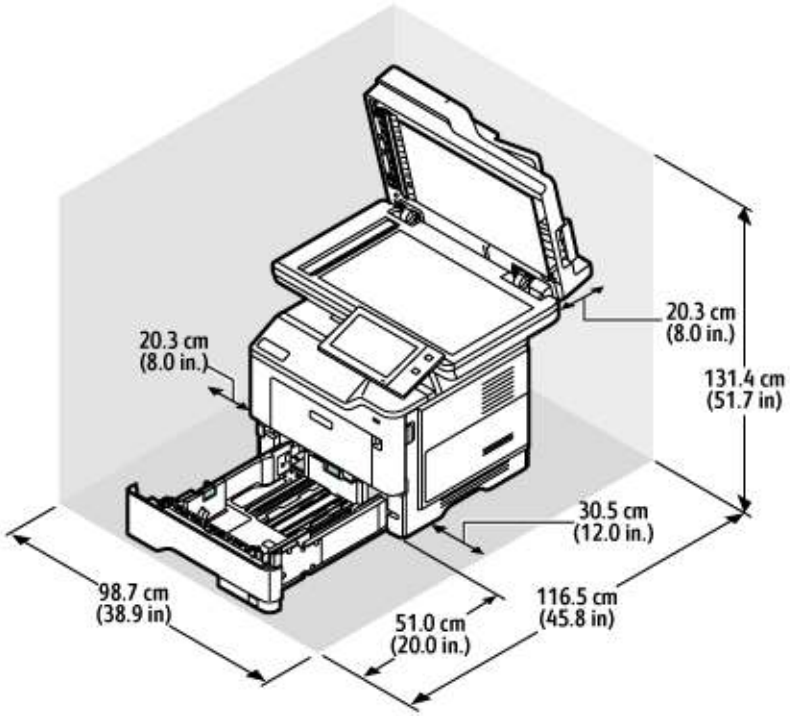

Installation Space

- Width: 98.7 cm (38.9 in.)
- Depth: 116.5 cm (45.8 in.)
- Height: 131.4 cm (51.7 in.)

Clearance

- Front: 51.0 cm (20.0 in.)
- Rear: 20.3 cm (8.0 in.)
- Left: 20.3 cm (8.0 in.)
- Right: 30.5 cm (12.0 in.)

CONFIGURATION WITH 3–OPTIONAL STANDARD TRAY MODULES

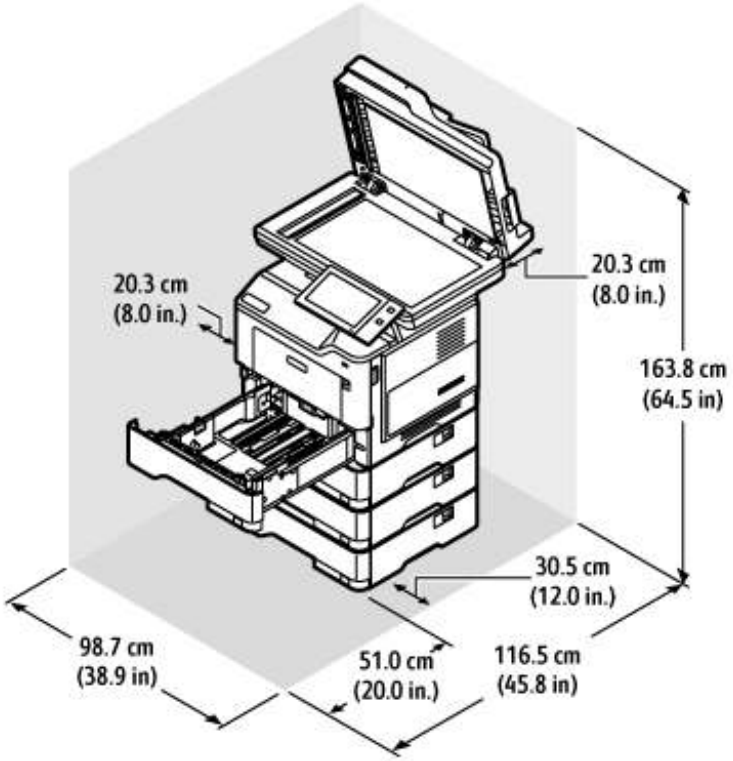

Installation Space

- Width: 98.7 cm (38.9 in.)
- Depth: 116.5 cm (45.8 in.)
- Height: 163.8 cm (64.5 in.)

Clearance

- Front: 51.0 cm (20.0 in.)
- Rear: 20.3 cm (8.0 in.)
- Left: 20.3 cm (8.0 in.)
- Right: 30.5 cm (12.0 in.)

CONFIGURATION WITH OPTIONAL TRAYS AND PRINTER STAND

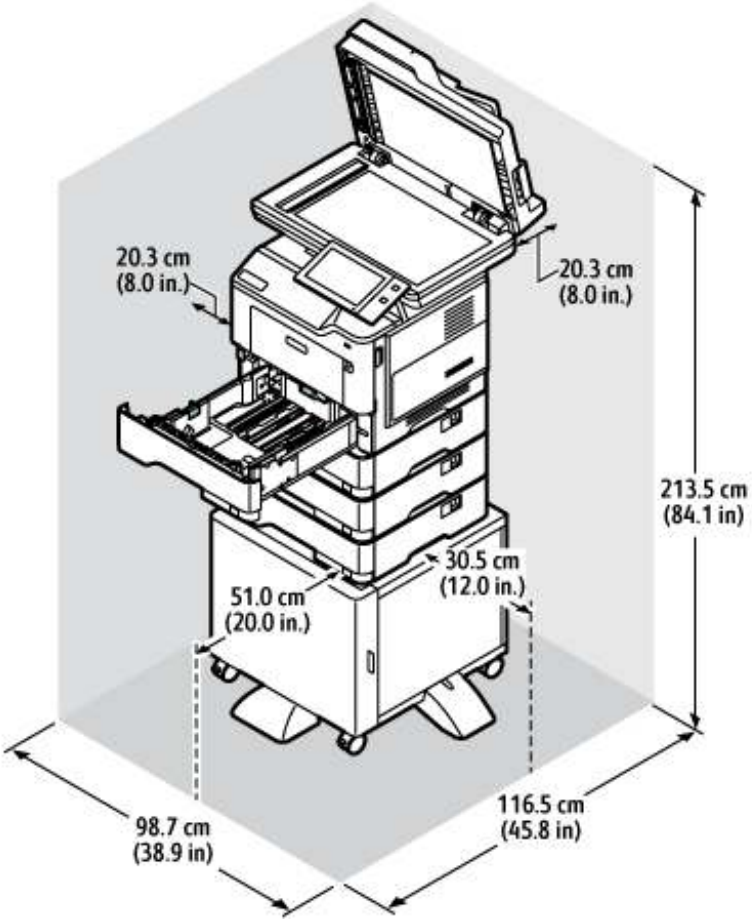

Installation Space

- Width: 98.7 cm (38.9 in.)
- Depth: 116.5 cm (45.8 in.)
- Height: 163.8 cm (64.5 in.)

Clearance

- Front: 51.0 cm (20.0 in.)
- Rear: 20.3 cm (8.0 in.)
- Left: 20.3 cm (8.0 in.)
- Right: 30.5 cm (12.0 in.)

Environmental Specifications

TEMPERATURE

Operating: 10–32°C (50–90°F)

RELATIVE HUMIDITY

Operating: 15% – 80% (non-condensing)

ELEVATION

For optimum performance, use the printer at elevations below 2896 m (9500 ft.).

Electrical Specifications

SPEED	POWER SUPPLY VOLTAGE	FREQUENCY	CURRENT REQUIRED
50 prints per minute	100–110 VAC +/-10%	50 Hz +/- 3 Hz 60 Hz +/- 3 Hz	9.8 A
	115–127 VAC +/-10%	50 Hz +/- 3 Hz 60 Hz +/- 3 Hz	8.4 A
	220–240 VAC +/-10%	50 Hz +/- 3 Hz 60 Hz +/- 3 Hz	4.2 A

Performance Specifications

PRINTING RESOLUTION

Maximum Resolution: 1200 x 1200 dpi

PRINT SPEED

Xerox reports maximum speed for continuous printing using short-edge feed on 75 g/m^2 paper from any tray:

- 47 ppm for A4 (210 x 297 mm, 8.27 x 11.69 in.)
- 50 ppm for Letter (216 x 279 mm, 8.5 x 11 in.)

Several factors affect print speed:

- Paper orientation: Most paper sizes are loaded short-edge feed. For faster print speeds when using A5 (148 x 210 mm, 5.8 x 8.3 in.), load the paper long-edge feed.
- Paper size: Letter (8.5 x 11 in.) and A4 (210 x 297 mm) sizes share the faster print speeds.
- Paper weight: Lighter weight media prints faster than heavier paper, such as Cardstock and Labels.
- Paper type: Plain prints faster than any other media type.

You can achieve the rated print speed when you print on Plain, Letter, or A4 paper using short-edge feed. The print speed can be slower when you print on narrow media that are less than 210 mm wide, such as envelopes.

Environmental, Health and Safety Contact Information

For more information on Environment, Health, and Safety in relation to this Xerox product and supplies, contact:

- United States and Canada, only: 1-800-ASK-XEROX (1-800-275-9376)
- Web address: Environmental Health & Sustainability - Xerox
- Email request (world-wide): EHS-Europe@xerox.com

For product safety information in the United States and Canada, go to www.xerox.com/environment.

Regulatory Information

This appendix contains:

Basic Regulations 286
Copy Regulations 293
Fax Regulations 296
Safety Certification 299
Material Safety Data Sheets 300

Basic Regulations

Xerox has tested this printer to electromagnetic emission and immunity standards. These standards are designed to mitigate interference caused or received by this printer in a typical office environment.

Changes or modifications to this device not specifically approved by Xerox® Corporation can void the authority of the user to operate this equipment.

UNITED STATES FCC REGULATIONS

This equipment has been tested and found to comply with the limits for a Class A digital device, pursuant to Part 15 of the Federal Communications Commission (FCC) Rules. These limits are designed to provide reasonable protection against harmful interference when the equipment is operated in a commercial environment. This equipment generates, uses, and can radiate radio frequency energy. If the equipment is not installed and used in accordance with the instruction manual, it may cause harmful interference to radio communications. Operation of this equipment in a residential area is likely to cause harmful interference. Users are required to correct the interference at their own expense.

Changes or modifications to this equipment not approved by Xerox can void the authority of the user to operate this equipment.

To maintain compliance with FCC regulations, shielded cables must be used with this equipment. Operation with non-approved equipment or unshielded cables is likely to result in interference to radio and TV reception.

Warning: To ensure compliance with Part 15 of the FCC rules, use shielded interface cables.

Xerox® VersaLink® B415 Multifunction Printers

Xerox® VersaLink® B415 Multifunction Printers comply with Part 15 of the FCC rules. Operation is subject to the following two conditions:

- The devices are not used to cause harmful interference.
- The devices must accept any interference received, including any interference that can cause an undesired operation.

Responsible Party: Xerox Corporation

Address: 800 Phillips Road, Webster, NY 14580

Internet contact information: www.xerox.com/en-us/about/ehs.

REGULATORY INFORMATION FOR 2.4-GHZ AND 5-GHZ WIRELESS NETWORK ADAPTERS

This product contains a 2.4-GHz and 5-GHz Wireless LAN radio transmitter module that complies with the requirements specified in FCC Part 15, Industry Canada RSS-210, and European Council Directive 2014/53/EU. Radio Frequency (RF) output power of this device will not exceed 20 dBm in either frequency band.

Operation of this device is subject to the following two conditions:

1. This device may not cause harmful interference, and
2. This device must accept any interference received, including interference that may cause undesired operation.

Changes or modifications to this device not specifically approved by the Xerox Corporation can void the authority of the user to operate this equipment.

LASER NOTICE

The printer is certified in the U.S. to conform to the requirements of DHHS 21 CFR, Chapter I, Subchapter J for Class I (1) laser products, and elsewhere is certified as a Class I laser product conforming to the requirements of IEC 60825-1: 2014.

Class I laser products are not considered to be hazardous. The laser system and printer are designed so there is never any human access to laser radiation above a Class I level during normal operation, user maintenance, or prescribed service conditions. The printer has a non-serviceable printhead assembly that contains a laser with the following specifications:

Class: IIIb (3b) AlGaInP

Nominal output power (milliwatts): 15

Wavelength (nanometers): 650–670

CANADA

This Class A digital apparatus complies with Canadian ICES-003 and ICES-001.

Cet appareil numérique de la classe A est conforme à la norme NMB-003 et NMB-001 du Canada.

This product contains a 2.4-GHz and 5-GHz Wireless LAN radio transmitter module that complies with the requirements specified in Industry Canada RSS-210.

Ce produit contient un module émetteur radio LAN sans fil de 2,4 GHz et 5 GHz conforme aux exigences spécifiées dans la réglementation Industrie du Canada RSS-210.

This device complies with Industry Canada's licence-exempt RSSs. Operation is subject to the following two conditions:

1. This device may not cause interference, and
2. This device must accept any interference, including interference that may cause undesired operation of the device.

Le présent appareil est conforme aux CNR d'Industrie Canada applicables aux appareils radio exempts de licence. L'exploitation est autorisée aux deux conditions suivantes:

1. l'appareil ne doit pas produire de brouillage, et
2. l'utilisateur de l'appareil doit accepter tout brouillage radioélectrique subi, même si le brouillage est susceptible d'en compromettre le fonctionnement.

There are operational restrictions for License-Exempt Local Area Network (LE-LAN) devices: the device for operation in the band 5150-5250 MHz is only for indoor use to reduce the potential for harmful interference to co-channel mobile satellite systems.

Il y a des restrictions opérationnelles pour dispositifs de réseaux locaux exempts de licence (RL-EL): les dispositifs fonctionnant dans la bande 5 150-5 250 MHz sont réservés uniquement pour une utilisation à l'intérieur afin de réduire les risques de brouillage préjudiciable aux systèmes de satellites mobiles utilisant les mêmes canaux.

This transmitter must not be co-located or operating in conjunction with any other antenna or transmitter. This equipment should be installed and operated with a minimum distance of 20 centimeters between the radiator and your body.

Cet émetteur ne doit pas être Co-placé ou ne fonctionnant en même temps qu'aucune autre antenne ou émetteur. Cet équipement devrait être installé et actionné avec une distance minimum de 20 centimètres entre le radiateur et votre corps.

EUROPEAN UNION AND EUROPEAN ECONOMIC AREA COMPLIANCE

CE

The CE mark applied to this product indicates compliance to applicable EU Directives

The full text of the EU Declaration of Conformity is located at www.xerox.com/en-us/about/ehs.

This product contains a 2.4-GHz and 5-GHz Wireless LAN radio transmitter module.

Radio Frequency (RF) output power of this device will not exceed 20 dBm in either frequency band.

Hereby, Xerox declares that the radio equipment model VersaLink® B415 Multifunction Printers are in compliance with Directive 2014/53/EU.

This printer, if used properly in accordance with the instructions, is not dangerous for the consumer or for the environment.

Warning:

- Changes or modifications to this equipment not specifically approved by the Xerox Corporation may void the user's authority to operate this equipment.
- External radiation from Industrial, Scientific, and Medical (ISM) equipment can interfere with the operation of this Xerox device. If external radiation from ISM equipment interferes with this device, contact your Xerox representative for assistance.
- This is a class A product. In a domestic environment, this product can cause radio frequency interference, in which case the user can be required to take adequate measures.
- To ensure compliance with European Union regulations, use shielded interface cables.

European Union Lot 4 Imaging Equipment Agreement

Xerox® has agreed to design criteria for energy efficiency and environmental performance of our products that are in scope of the European Union (EU) Energy Related Products Directive, specifically the Lot 4 - Imaging Equipment.

In scope products include Household and Office equipment that meet the following criteria:

- Standard monochrome format products with a maximum speed less than 66 A4 images per minute.
- Standard color format products with a maximum speed less than 51 A4 images per minute.

TO LEARN MORE ABOUT	GO TO
• Power Consumption and Activation Times • Default Energy Saver Settings	*User Documentation* or *Systems Administrators Guide* www.xerox.com/office/VLB415docs
• Benefits of purchasing ENERGY STAR® qualified products	www.energystar.gov
• Environmental Benefits of Duplex Printing • Benefits of using lighter paper weights (60 g/m^2) and Recyclability • Cartridge disposal and treatment • Xerox participation in sustainability initiatives	www.xerox.com/en-us/about/ehs

European Union Lot 19 Ecodesign Directive

Per European Commission Ecodesign Directive, the light source contained within this product or its components is intended to be used for Image Capture or Image Projection only, and is not intended for use in other applications.

ENERGY STAR

The ENERGY STAR program is a voluntary scheme to promote the development and purchase of energy-efficient models, which help to reduce environmental impact. Details on the ENERGY STAR program and models qualified to ENERGY STAR can be found at the following website: www.energystar.gov.

The ENERGY STAR and ENERGY STAR mark are registered United States trademarks.

The ENERGY STAR Imaging Equipment Program is a team effort between United States, European Union, Japanese governments, and the office equipment industry to promote energy-efficient copiers, printers, fax, multifunction printers, personal computers, and monitors. Reducing product energy consumption helps combat smog, acid rain, and long-term changes to the climate by decreasing the emissions that result from generating electricity.

For more information on energy or other related topics, go to www.xerox.com/environment or www.xerox.com/environment_europe.

Power Consumption and Activation Time

The amount of electricity that a device consumes depends on the way the device is used. This device is designed and configured to enable you to reduce your electricity usage.

To reduce energy consumption, your device is configured to use Energy Saver modes. After the last print, the device transitions to Ready mode. In Ready mode, the device can print again immediately. If the device is not used for a specified period, the device transitions to Sleep mode. To reduce power consumption, only essential functions remain active in Sleep mode. The device takes longer to produce the first print after it exits Sleep Mode, than it

takes to print in Ready mode. This delay is the result of the printer that wakes up and is typical of most imaging devices on the market.

To save power, you can configure Energy Saver modes. The following options are available:

- **Job Activated**: The device wakes when it detects activity. To set the delay before the device enters Sleep Mode, enter the number of minutes.
- **Sleep and wake up at scheduled times**: The device wakes and sleeps according to a schedule that you specify.
- **Auto Power Off**: To allow the device to power off after a period of time in Sleep Mode, select Auto Power Off. To set the delay before the printer powers off from the Sleep Mode setting, enter the number of hours.

To change the Energy Saver mode settings, refer to the *User Guide* at www.xerox.com/office/VLB415docs. For further assistance, contact your System Administrator or refer to the *System Administrator Guide*.

To enable Auto Power Off mode, contact your System Administrator. For details, refer to the *System Administrator Guide* at www.xerox.com/office/VLB415docs.

To learn more about Xerox participation in sustainability initiatives, go to: www.xerox.com/environment or www.xerox.com/environment_europe.

Note: Changing the default Energy Saver activation times can result in an overall higher energy consumption of the device. Before you turn off Energy Saver modes or set a long activation time, consider the increase in device power consumption.

Default Energy Saver Settings

This device is ENERGY STAR®-qualified under the ENERGY STAR Program Requirements for Imaging Equipment. The transition time from Ready mode to Sleep mode can be set from 0–60 or 0–120 minutes, depending on the printer model. The default value is set to 0 minutes. The maximum transition time from Ready mode to Sleep mode can take up to 120 minutes, depending on the printer model and system configuration.

To change the Energy Saver settings, or enable Auto Standby capability, contact your system administrator or refer to *System Administrator Guide* at www.xerox.com/office/VLB415docs.

EPEAT

This device is registered in the EPEAT directory for meeting the ecolabel properties. Included is the factory defaulted Sleep mode enablement. In Sleep mode the printer uses less than 1 Watt of power.

To learn more about Xerox participation in sustainability initiatives, go to https://www.xerox.com/en-us/about/ehs or www.xerox.co.uk/about-xerox/environment/engb.html.

Environmental Benefits of Duplex Printing

Most Xerox products have duplex printing, also known as 2-sided printing, capability. This enables you to print on both sides of the paper automatically, and therefore helps to reduce the use of valuable resources by reducing your paper consumption. The Lot 4 Imaging Equipment agreement requires that on models greater than or equal to 40 ppm color or greater than or equal to 45 ppm monochrome the duplex function has been auto enabled, during the setup and driver installation. Some Xerox models below these speed bands may also be enabled with 2-sided printing settings defaulted on at the time of install. Continuing to use the duplex function will reduce the

environmental impact of your work. However, should you require simplex/1-sided printing, you may change the print settings in the print driver.

Paper Types

This product can be used to print on both recycled and virgin paper, approved to an environmental stewardship scheme, which complies with EN12281 or a similar quality standard. Lighter weight paper (60 g/m^2), which contains less raw material and thus saves resources per print, may be used in certain applications. We encourage you to check if this is suitable for your printing needs.

EURASIAN ECONOMIC COMMUNITY CERTIFICATION

The EAC mark applied to this product indicates certification for use on the markets of the Member States of the Customs Union.

GERMANY

Germany - Blue Angel

RAL, the German Institute for Quality Assurance and Labeling, has awarded the following configuration of this device the Blue Angel Environmental Label:

Network printer with automatic 2-sided printing and USB or network connectivity.

This label distinguishes it as a device that satisfies Blue Angel criteria for environmental acceptability in terms of device design, manufacture, and operation. For more information, go to www.blauer-engel.de.

Blendschutz

Das Gerät ist nicht für die Benutzung im unmittelbaren Gesichtsfeld am Bildschirmarbeitsplatz vorgesehen. Um störende Reflexionen am Bildschirmarbeitsplatz zu vermeiden, darf dieses Produkt nicht im unmittelbaren Gesichtsfeld platziert werden.

Lärmemission

Maschinenlärminformations-Verordnung 3. GPSGV: Der höchste Schalldruckpegel beträgt 70 dB(A) oder weniger gemäß EN ISO 7779.

Importeur

Xerox GmbH

Hellersbergstraße 2-4

41460 Neuss

Deutschland

TURKEY ROHS REGULATION

In compliance with Article 7 (d), we hereby certify “it is in compliance with the EEE regulation.”

“EEE yönetmeliğine uygundur.”

UKRAINE ROHS COMPLIANCE

Обладнання відповідаєвимогам Технічного регламенту щодо обмеження

використання деяких небезпечних речовин в електричному та електронному

обладнані, затвердженого постановою Кабінету Міністрів України від 3 грудня 2008 № 1057

The equipment complies with requirements of the Technical Regulation, approved by the Resolution of Cabinet of Ministry of Ukraine as of December 3, 2008, in terms of restrictions for the use of certain dangerous substances in electrical and electronic equipment.

Copy Regulations

UNITED STATES

Congress, by statute, has forbidden the reproduction of the following subjects under certain circumstances. Penalties of fine or imprisonment may be imposed on those guilty of making such reproductions.

1. Obligations or Securities of the United States Government, such as:
   - Certificates of Indebtedness.
   - National Bank Currency.
   - Coupons from Bonds.
   - Federal Reserve Bank Notes.
   - Silver Certificates.
   - Gold Certificates.
   - United States Bonds.
   - Treasury Notes.
   - Federal Reserve Notes.
   - Fractional Notes.
   - Certificates of Deposit.
   - Paper Money.
   - Bonds and Obligations of certain agencies of the government, such as FHA and so on.
   - Bonds. United States Savings Bonds may be photographed only for publicity purposes in connection with the campaign for the sale of such bonds.
   - Internal Revenue Stamps. If it is necessary to reproduce a legal document on which there is a canceled revenue stamp, this may be done provided the reproduction of the document is performed for lawful purposes.
   - Postage Stamps, canceled or uncanceled. For philatelic purposes, Postage Stamps may be photographed, provided the reproduction is in black and white and is less than 75% or more than 150% of the linear dimensions of the original.
   - Postal Money Orders.
   - Bills, Checks, or Drafts of money drawn by or upon authorized officers of the United States.
   - Stamps and other representatives of value, of whatever denomination, which have been or may be issued under any Act of Congress.
   - Adjusted Compensation Certificates for Veterans of the World Wars.
2. Obligations or Securities of any Foreign Government, Bank, or Corporation.
3. Copyrighted materials, unless permission of the copyright owner has been obtained or the reproduction falls within the “fair use” or library reproduction rights provisions of the copyright law. Further information of these provisions may be obtained from the Copyright Office, Library of Congress, Washington, D.C. 20559. Ask for Circular R21.

4. Certificate of Citizenship or Naturalization. Foreign Naturalization Certificates may be photographed.
5. Passports. Foreign Passports may be photographed.
6. Immigration papers.
7. Draft Registration Cards.
8. Selective Service Induction papers that bear any of the following Registrant's information:
    - Earnings or Income.
    - Court Record.
    - Physical or mental condition.
    - Dependency Status.
    - Previous military service.
    - Exception: United States military discharge certificates may be photographed.
9. Badges, Identification Cards, Passes, or Insignia carried by military personnel, or by members of the various Federal Departments, such as FBI, Treasure, and so on (unless photograph is ordered by the head of such department or bureau).

Reproducing the following is also prohibited in certain states:

- Automobile Licenses.
- Drivers' Licenses.
- Automobile Certificates of Title.

The preceding list is not all inclusive, and no liability is assumed for its completeness or accuracy. In case of doubt, consult your attorney.

For more information about these provisions contact the Copyright Office, Library of Congress, Washington, D.C. 20559. Ask for Circular R21.

CANADA

Parliament, by stature, has forbidden the reproduction of the following subjects under certain circumstances. Penalties of fine or imprisonment may be imposed on those guilty of making such reproductions.

- Current bank notes or current paper money
- Obligations or securities of a government or bank
- Exchequer bill paper or revenue paper
- The public seal of Canada or of a province, or the seal of a public body or authority in Canada, or of a court of law
- Proclamations, orders, regulations, or appointments, or notices thereof (with intent to falsely cause same to purport to have been printed by the Queens Printer for Canada, or the equivalent printer for a province)
- Marks, brands, seals, wrappers, or designs used by or on behalf of the Government of Canada or of a province, the government of a state other than Canada or a department, board, Commission, or agency established by the Government of Canada or of a province or of a government of a state other than Canada

- Impressed or adhesive stamps used for the purpose of revenue by the Government of Canada or of a province or by the government of a state other than Canada
- Documents, registers, or records kept by public officials charged with the duty of making or issuing certified copies thereof, where the copy falsely purports to be a certified copy thereof
- Copyrighted material or trademarks of any manner or kind without the consent of the copyright or trademark owner

This list is provided for your convenience and assistance, but it is not all-inclusive, and no liability is assumed for its completeness or accuracy. In case of doubt, consult your solicitor.

OTHER COUNTRIES

Copying certain documents may be illegal in your country. Penalties of fine or imprisonment may be imposed on those found guilty of making such reproductions.

- Currency notes
- Bank notes and checks
- Bank and government bonds and securities
- Passports and identification cards
- Copyright material or trademarks without the consent of the owner
- Postage stamps and other negotiable instruments

This list is not inclusive and no liability is assumed for either its completeness or accuracy. In case of doubt, contact your legal counsel.

Fax Regulations

UNITED STATES

Fax Send Header Requirements

The Telephone Consumer Protection Act of 1991 makes it unlawful for any person to use a computer or other electronic device, including a fax machine, to send any message unless such message clearly contains in a margin at the top or bottom of each transmitted page or on the first page of the transmission, the date and time it is sent and an identification of the business or other entity, or other individual sending the message and the telephone number of the sending machine or such business, other entity, or individual. The telephone number provided may not be a 900 number or any other number for which charges exceed local or long-distance transmission charges.

For instructions on programming the Fax Send Header information, refer to the section of the *System Administrator Guide* on Setting Transmission Defaults.

Data Coupler Information

This equipment complies with Part 68 of the FCC rules and the requirements adopted by the Administrative Council for Terminal Attachments (ACTA). On the cover of this equipment is a label that contains, among other information, a product identifier in the format US:AAAEQ##TXXXX. If requested, this number must be provided to the Telephone Company.

A plug and jack used to connect this equipment to the premises wiring and telephone network must comply with the applicable FCC Part 68 rules and requirements adopted by the ACTA. A compliant telephone cord and modular plug is provided with this product. It connects to a compatible modular jack that is also compliant. See installation instructions for details.

You can safely connect the printer to the following standard modular jack: USOC RJ-11C using the compliant telephone line cord (with modular plugs) provided with the installation kit. See installation instructions for details.

The Ringer Equivalence Number (REN) is used to determine the number of devices that can be connected to a telephone line. Excessive RENs on a telephone line could result in the devices not ringing in response to an incoming call. In most but not all areas, the sum of RENs should not exceed five (5.0). To be certain of the number of devices that can be connected to a line, as determined by the RENs, contact the local Telephone Company. For products approved after July 23, 2001, the REN is part of the product identifier that has the format US:AAAEQ##TXXXX. The digits represented by ## are the REN without a decimal point (for example, 03 is a REN of 0.3). For earlier products, the REN is separately shown on the label.

To order the correct service from the local Telephone Company, you could also have to quote the codes in the following list:

- Facility Interface Code (FIC) = 02LS2
- Service Order Code (SOC) = 9.0Y

> **Warning:** Ask your local Telephone Company for the modular jack type installed on your line. Connecting this machine to an unauthorized jack can damage telephone company equipment. You, not Xerox, assume all responsibility and/or liability for any damage caused by the connection of this machine to an unauthorized jack.

If this Xerox® equipment causes harm to the telephone network, the Telephone Company could temporarily discontinue service to the telephone line to which it is connected. If advance notice is not practical, the Telephone Company notifies you of the disconnection as soon as possible. If the Telephone Company interrupts your service, they can advise you of your right to file a complaint with the FCC if you believe that it is necessary.

The Telephone Company could change its facilities, equipment, operations, or procedures which could affect the operation of the equipment. If the Telephone Company changes something that affects the operation of the equipment, they should notify you in order for you to make necessary modifications to maintain uninterrupted service.

If you experience trouble with this Xerox® equipment, please contact the appropriate service center for repair or warranty information. Contact information is contained in the Device app on the printer and in the back of the Troubleshooting section of the *User Guide*. If the equipment is causing harm to the telephone network, the Telephone Company may request you to disconnect the equipment until the problem is resolved.

Only a Xerox Service Representative or an authorized Xerox Service provider are authorized to make repairs to the printer. This applies at any time during or after the service warranty period. If unauthorized repair is performed, the remainder of the warranty period is null and void.

This equipment must not be used on party lines. Connection to party line service is subject to state tariffs. Contact the state public utility commission, public service commission, or corporation commission for information.

Your office could have specially wired alarm equipment connected to the telephone line. Make sure that the installation of this Xerox® equipment does not disable your alarm equipment.

If you have questions about what could disable alarm equipment, consult your Telephone Company or a qualified installer.

CANADA

This product meets the applicable Innovation, Science and Economic Development Canada technical specifications.

A representative designated by the supplier should coordinate repairs to certified equipment. Repairs or alterations made by the user to this device, or device malfunctions, could cause the telecommunications company to request you to disconnect the equipment.

For user protection, make sure that the printer is properly grounded. The electrical ground connections of the power utility, telephone lines, and internal metallic water pipe systems, if present, must be connected together. This precaution could be vital in rural areas.

> **Warning:** Do not attempt to make such connections yourself. Contact the appropriate electric inspection authority, or electrician, to make the ground connection.

The Ringer Equivalence Number (REN) indicates the maximum number of devices allowed to be connected to a telephone interface. The termination of an interface may consist of any combination of devices subject only to the requirement that the sum of the RENs of all the devices not exceed five. For the Canadian REN value, please refer to the label on the equipment.

Canada CS-03 Issue 9

This product has been tested to and is compliant with CS–03 issue 9.

EUROPEAN UNION

Radio Equipment and Telecommunications Terminal Equipment Directive

This device has been designed to work with the national public switched telephone networks and compatible PBX devices of the following countries:

PAN-EUROPEAN ANALOG PSTN AND COMPATIBLE PBX CERTIFICATIONS		
Austria	Greece	Netherlands
Belgium	Hungary	Norway
Bulgaria	Iceland	Poland
Cyprus	Ireland	Portugal
Czech Republic	Italy	Romania
Denmark	Latvia	Slovakia
Estonia	Liechtenstein	Slovenia
Finland	Lithuania	Spain
France	Luxembourg	Sweden
Germany	Malta	

If you have problems with your product, contact your local Xerox representative. This product can be configured to be compatible with other country networks. Before reconnecting the device to a network in another country, contact your Xerox representative for assistance.

Note:

- Although this product can use either loop disconnect (pulse) or DTMF tone signaling, Xerox recommends that you use DTMF signaling. DTMF signaling provides reliable and faster call setup.
- Modification of this product, or connection to external control software or control apparatus not authorized by Xerox, invalidates its certification.

SOUTH AFRICA

This modem must be used in conjunction with an approved surge-protection device.

Safety Certification

This device is compliant with IEC and EN product safety standards certified by a National Regulatory Test Laboratory (NRTL).

Material Safety Data Sheets

For Material Safety Data information regarding your printer, go to:

- Web address: Xerox Safety Documents and Compliance Information
- United States and Canada, only: 1-800-ASK-XEROX (1-800-275-9376)
- Other markets, send an email request to: EHS-Europe@xerox.com

Recycling and Disposal

This appendix contains:

All Countries..... 302
North America..... 303
European Union 304
Other Countries 305

All Countries

If you are managing the disposal of your Xerox product, please note that the printer may contain lead, mercury, perchlorate, and other materials whose disposal may be regulated due to environmental considerations. The presence of these materials is fully consistent with global regulations applicable at the time that the product was placed on the market.

For recycling and disposal information, contact your local authorities.

Perchlorate Material: This product may contain one or more Perchlorate-containing devices, such as batteries. Special handling may apply. For more information, go to www.dtsc.ca.gov/hazardouswaste/perchlorate.

BATTERY REMOVAL

Batteries should only be replaced by a manufacturer-approved service facility.

North America

Xerox operates an equipment take-back and reuse/recycle program. Contact your Xerox representative (1-800-ASK-XEROX) to determine if this Xerox product is part of the program.

For more information about Xerox environmental programs, visit www.xerox.com/environment.

For recycling and disposal information, contact your local authorities.

European Union

These symbols indicate that this product is not to be disposed of with your household waste, according to the Waste Electrical and Electronic Equipment (WEEE) Directive (2012/19/EU), the Battery Directive (2006/66/EC) and national legislation implementing those Directives.

If a chemical symbol is printed beneath the symbol shown above, in accordance with the Battery Directive, this indicates that a heavy metal (Hg = Mercury, Cd = Cadmium, Pb = Lead) is present in this battery or accumulator at a concentration above an applicable threshold specified in the Battery Directive.

Some equipment may be used in both a domestic/household and a professional/business application. Private households within European Union may return used electrical and electronic equipment to designated collection facilities free of charge. For more information about collection and recycling of old products and batteries, contact your local municipality, your waste disposal service or the point of sale where you purchased the items. In some member states, when you purchase new equipment, your local retailer may be required to take back your old equipment free of charge. For more information, contact your retailer.

Business Users in the European Union, in accordance with European legislation, end of life electrical and electronic equipment subject to disposal must be managed within agreed procedures. If you wish to discard electrical and electronic equipment, contact your dealer or supplier, local reseller or Xerox representative for end of life take-back information prior to disposal.

Improper handling of this type of waste could have a possible impact on the environment and human health due to potentially hazardous substances that are generally associated with EEE. Your cooperation in the correct disposal of this product will contribute to the effective usage of natural resources.

DISPOSAL OUTSIDE OF THE EUROPEAN UNION

These symbols are only valid in the European Union. If you wish to discard these items, please contact your local authorities or dealer and ask for the correct method of disposal.

Other Countries

Please contact your local waste management authority to request disposal guidance.

Apps Features

This appendix contains:

Apps Features..... 308

Apps Features

FEATURE		DESCRIPTION	COPY	EMAIL	FAX	SERVER FAX	SCAN TO	WORK-FLOW SCAN-NING	ID CARD COPY
	Output Color	Use Output Color to control the color rendering of the output image or print.	•	•			•	•	•
	2-Sided Copying and **2-Sided Scanning**	You can use the 2-sided options to set the device to scan one or both sides of an original document. For Copy jobs, you can specify 1-sided or 2-sided output.	•	•	•	•	•	•	
	Paper Supply	Use Paper Supply to specify the size, type, and color of the paper required, or the paper tray to use. If Auto is selected, the printer chooses the paper tray based on the original document size and the selected settings.	•						•
	Collation	You can collate multiple-page copy jobs automatically. For example, when you are making three 1-sided copies of a six-page document, the copies are printed in this order:	•						

FEATURE		DESCRIPTION	COPY	EMAIL	FAX	SERVER FAX	SCAN TO	WORK-FLOW SCAN-NING	ID CARD COPY
		1, 2, 3, 4, 5, 6; 1, 2, 3, 4, 5, 6; 1, 2, 3, 4, 5, 6.							
	Finishing	If finishing options are available, use this option to choose the finishing options required for your printed output.	•						
	Reduce / Enlarge	You can reduce the image to as little as 25 % of the original size or enlarge it to as much as 400 %. When you resize an image, to maintain the original proportions, select **Proportional %**.	•						•
	Original Type	The printer optimizes the image quality of the copies based on the type of images in the original document and how the original document was created.		•	•	•		•	•
	Contrast	You can use the Contrast feature to adjust the variation between light and dark areas of the image.	•	•	•	•	•	•	

FEATURE		DESCRIPTION	COPY	EMAIL	FAX	SERVER FAX	SCAN TO	WORK-FLOW SCAN-NING	ID CARD COPY
	Lighten / Darken	Use the Lighten/Darken slider to make the output image or print lighter or darker.	•	•	•	•	•	•	•
	Sharpness	Use this option to sharpen the output image or print. For best results, sharpen text images and soften photos.	•	•	•		•	•	

FEATURE		DESCRIPTION	COPY	EMAIL	FAX	SERVER FAX	SCAN TO	WORK-FLOW SCAN-NING	ID CARD COPY
	Saturation	Saturation allows you to adjust the color strength and the amount of gray in the color. Note: This feature is not available when Output Color is set to Black and White or Grayscale.		•			•	•	
	Original Orienta-tion	You can use the Original Orientation option to specify the layout of the original images that you scan. The printer uses the information to determine whether images require rotation to produce the required output.	•	•		•	•	•	

FEATURE		DESCRIPTION	COPY	EMAIL	FAX	SERVER FAX	SCAN TO	WORK-FLOW SCAN-NING	ID CARD COPY
	Image Shift	Image Shift allows you to modify the location of the image on the page. You can shift the printed image along the X and Y axes of each sheet of paper.	•						
	Auto Back-ground Suppres-sion	Use the Auto Background Suppression setting to reduce the sensitivity of the printer to variations in light background colors.	•	•	•	•	•	•	•
	Edge Erase	You can use the Edge Erase feature to erase content from the edges of your images. You can specify the amount to erase on the right, left, top, and bottom edges.	•	•			•	•	
	Original Size	To ensure that you scan the correct area of the documents, specify the original document size.	•	•	•	•	•	•	

FEATURE		DESCRIPTION	COPY	EMAIL	FAX	SERVER FAX	SCAN TO	WORK-FLOW SCAN-NING	ID CARD COPY
	Mirror Image	Use Mirror Image to reverse the image and text on the page.	•						
	Negative Image	Negative Image reverses the light and dark areas in your document, and prints the image as if it is a photo negative. Printing a negative image is useful for documents that have a substantial amount of dark background or light text and images.	•						
	Special Pages	Special Pages is used to add covers and inserts to your job. You can specify exception pages to print on different paper than the main body of the job. Additionally, you can program chapter start pages.	•						
	Annota-tions	You can add annotations, such as page numbers and the date, to your copies.	•						

FEATURE		DESCRIPTION	COPY	EMAIL	FAX	SERVER FAX	SCAN TO	WORK-FLOW SCAN-NING	ID CARD COPY
	Booklet Creation	The Booklet Creation feature prints two pages on each side of the paper. The pages are reordered so that they are in numerical order when folded.	•						
	Page Layout	You can print the selected number of pages on one side of a sheet of paper. Selecting multiple pages per sheet saves paper and provides a way to review the layout of a document.	•						
	Sample Job	Sample Job allows you to print a test copy of a job to inspect before you print multiple copies. This feature is useful for complex or high-volume jobs. After you print and inspect the test copy, you can choose to print or cancel the remaining copies.	•						
	Auto Start When Originals	The Auto Start When Originals are Detected option allows the device to start a job	•	•	•		•		

FEATURE		DESCRIPTION	COPY	EMAIL	FAX	SERVER FAX	SCAN TO	WORK-FLOW SCAN-NING	ID CARD COPY
	are Detected	automatically when original documents are detected in the automatic document feeder.							
	Build Job	Use the Build Job option for jobs that include a variety of original documents that require different settings, or to scan multiple-page jobs from the document glass. The job is scanned in segments. After all the segments are scanned, the job is processed and completed.		•	•	•	•	•	
	Save Current Settings	To use a particular combination of copy settings for future copy jobs, you can save the settings with a name and retrieve the settings for later use.	•						
	Retrieve Current Settings	You can retrieve and use any previously saved copy settings for current jobs.	•						
	Quantity	Use this option to enter the number of required ID card copies.							•

FEATURE		DESCRIPTION	COPY	EMAIL	FAX	SERVER FAX	SCAN TO	WORK-FLOW SCAN-NING	ID CARD COPY
	Resolution	Resolution determines how fine or grainy graphic images appear. Image resolution is measured in dots per inch (dpi).		•	•	•	•	•	
	Remove Blank Pages	Remove Blank Pages configures the printer to ignore blank pages.		•			•	•	
	From	Use the From option to specify the originator of the email. Note: The system administrator can preset this option to populate automatically with your user account details.		•					
	Reply To	Use the Reply To option to include an email address that you want the recipient to reply to. This option is useful if you want the recipient to reply to your email address, rather than to the device.		•					

FEATURE		DESCRIPTION	COPY	EMAIL	FAX	SERVER FAX	SCAN TO	WORK-FLOW SCAN-NING	ID CARD COPY
		Note: The system administrator can preset this option.							
	Message	Use the Message option to enter information to accompany the email.		•					
	Quality/ File Size	The Quality/File Size option lets you choose from three settings that balance the quality of the image and the size of the file. Higher-quality images result in larger file sizes, which are not ideal for sharing and transmitting over the network.		•			•	•	
	File Format	Use the File Format option to specify the format of the saved image or to define a searchable image. You can add a password to protect the image or choose to combine multiple images into a single file.		•			•	•	

FEATURE		DESCRIPTION	COPY	EMAIL	FAX	SERVER FAX	SCAN TO	WORK-FLOW SCAN-NING	ID CARD COPY
	If File Already Exists	Use this option to define what action the device takes when the file name is used already.					•	•	
	File and Attach-ment	Use this option to specify a name for the file that contains the scanned images.		•			•	•	
	Update Workflows	Use Update Workflows to refresh the list of workflows that appear at the control panel.						•	
	Add File Destina-tions	Use this option to choose more destinations to file the scanned images.					•	•	
	Reduce/ Split	Use the Reduce/Split option to specify how your faxed document is printed on the receiving fax machine. If the image is too large to fit on the paper size, you can reduce the image to fit or split across multiple pages.			•				

FEATURE		DESCRIPTION	COPY	EMAIL	FAX	SERVER FAX	SCAN TO	WORK-FLOW SCAN-NING	ID CARD COPY
	Confirma-tion Report	You can request a report to confirm if your fax was received. To receive a Confirmation Report only if an error occurred during transmission, choose Print on Error Only.			•				
	Starting Rate	Select the highest starting rate for transmitting the fax, unless the destination for the fax you are sending has special requirements. Forced (4800 bps) is the recommended setting for lines that can have transmission interference.			•				
	Cover Sheet	You can use the Cover Sheet option to add an introduction page to the beginning of your fax. You can add a short comment to the cover sheet, and To and From details.			•				

FEATURE		DESCRIPTION	COPY	EMAIL	FAX	SERVER FAX	SCAN TO	WORK-FLOW SCAN-NING	ID CARD COPY
	Send Header Text	It is unlawful to send a message from a fax machine without the proper transmission header text. Ensure that the name and telephone number of the sender, and the date and time of the transmission are included on all faxes.			•				
	Delay Send	You can set a time in the future for the printer to send your fax job. You can delay the sending of your fax job for up to 24 hours.			•	•			

xerox™