UISP Power

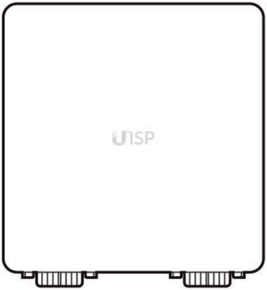

a

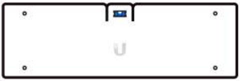

b

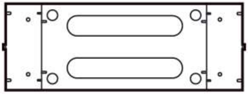

c

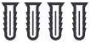

d

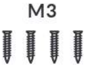

e

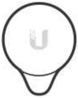

f

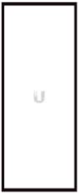

g

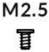

h

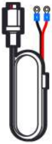

i

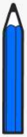

①

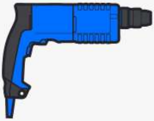

②

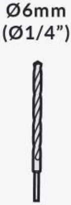

③

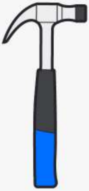

④

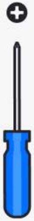

⑤

120W Power Adapter with Power TransPort (Not Included)

Available in the Early Access Store / Included with a UISP Switch or Router

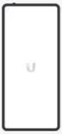

⑥

UISP Box

Buy ›

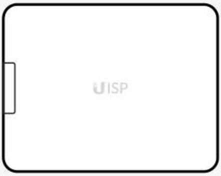

⑦

UISP Switch

Buy ›

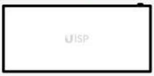

UISP Router

Buy ›

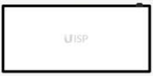

⑧

1

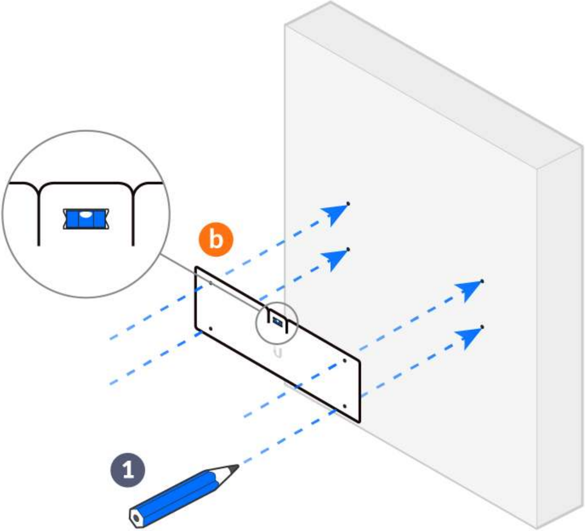

2

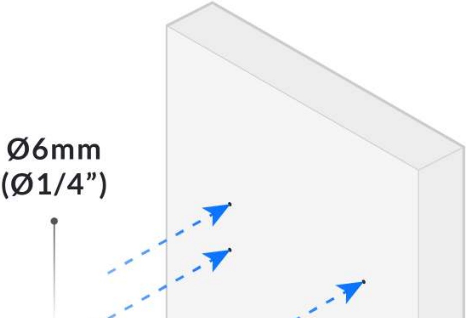

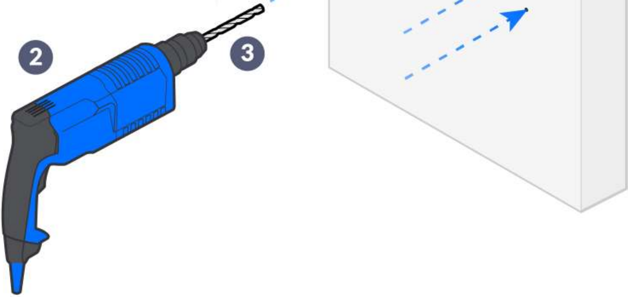

3

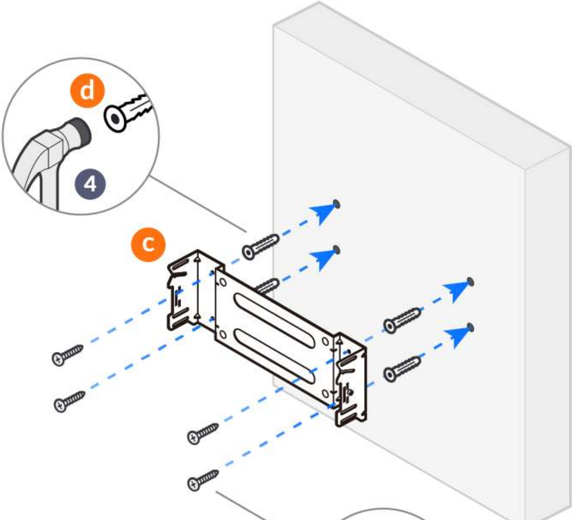

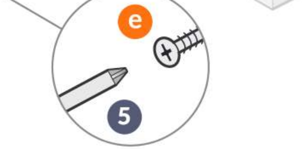

4

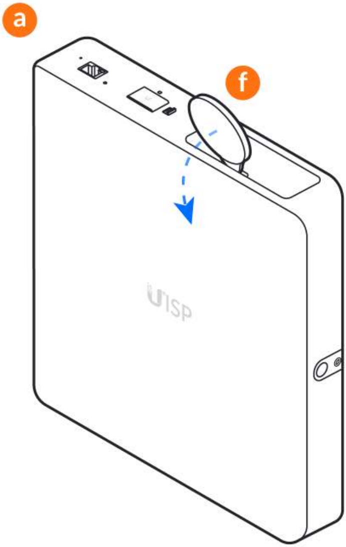

5

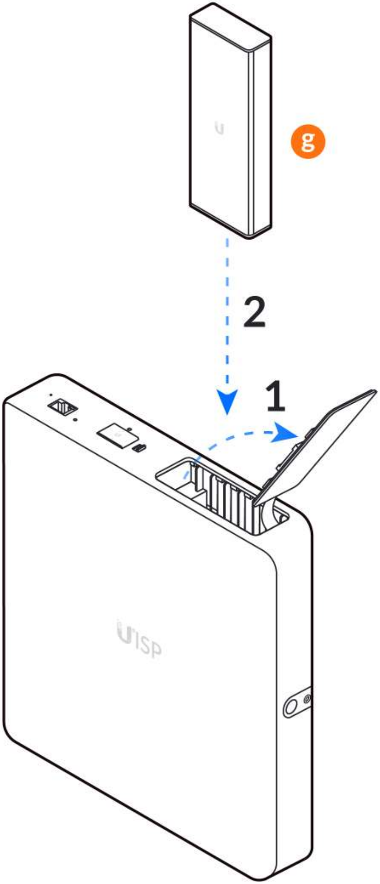

6

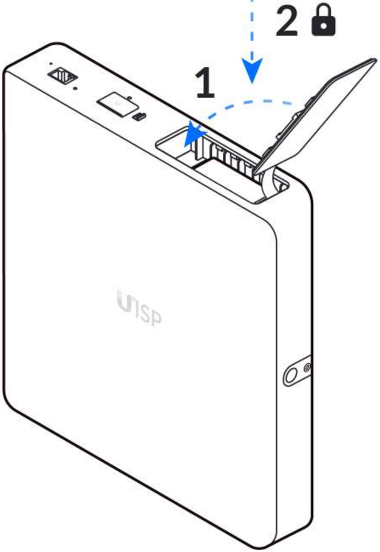

7

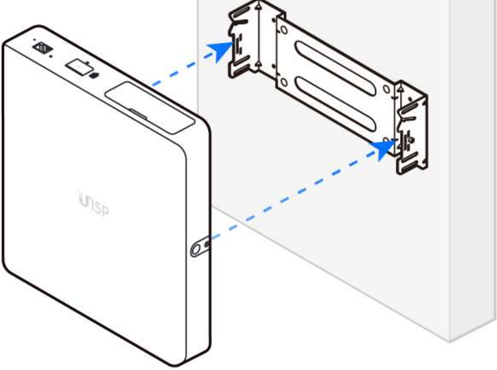

8

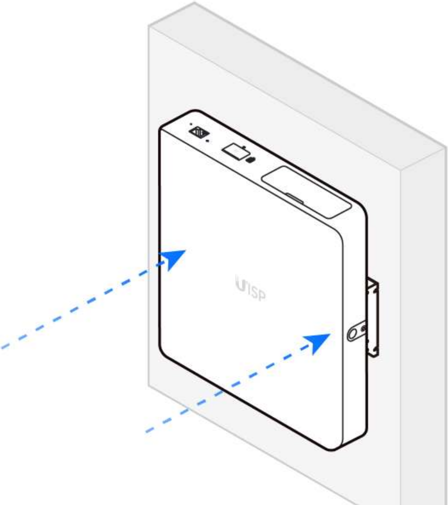

9

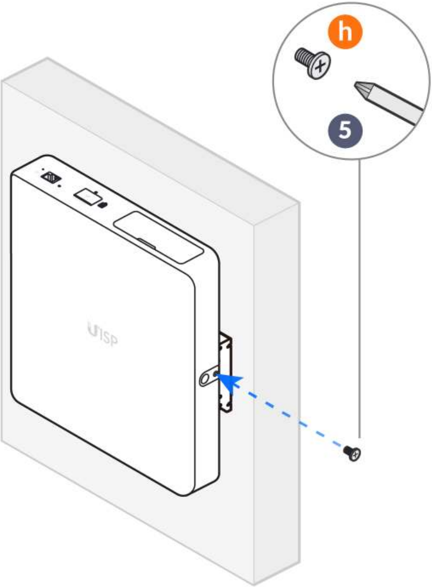

10

A

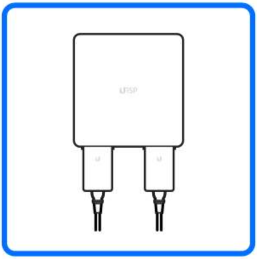

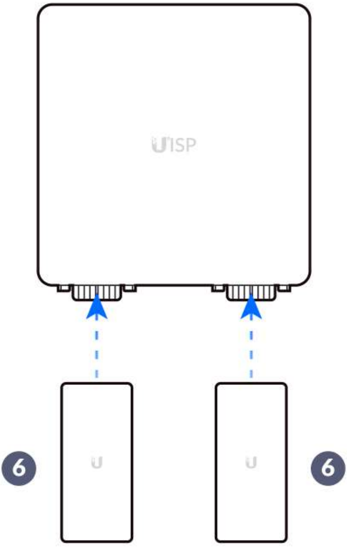

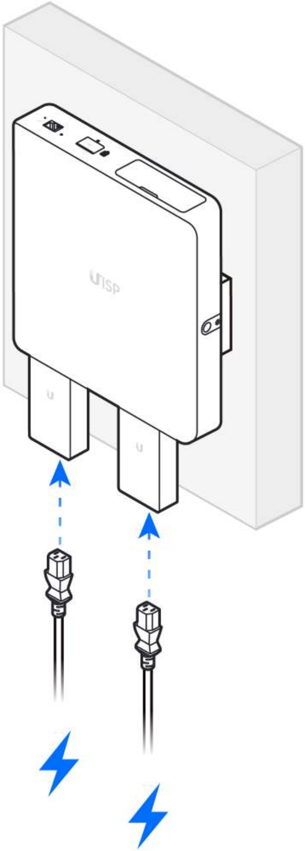

B

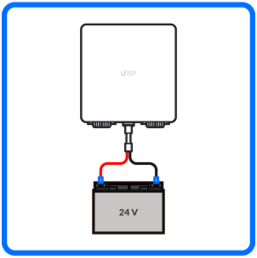

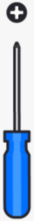

①

24V lead-acid battery

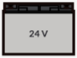

②

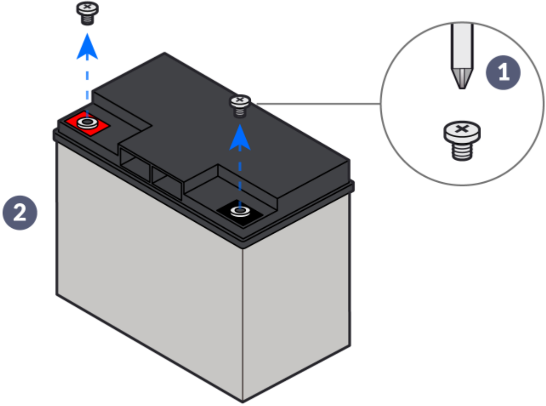

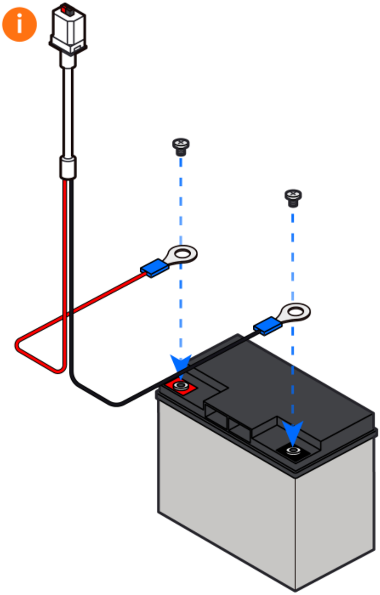

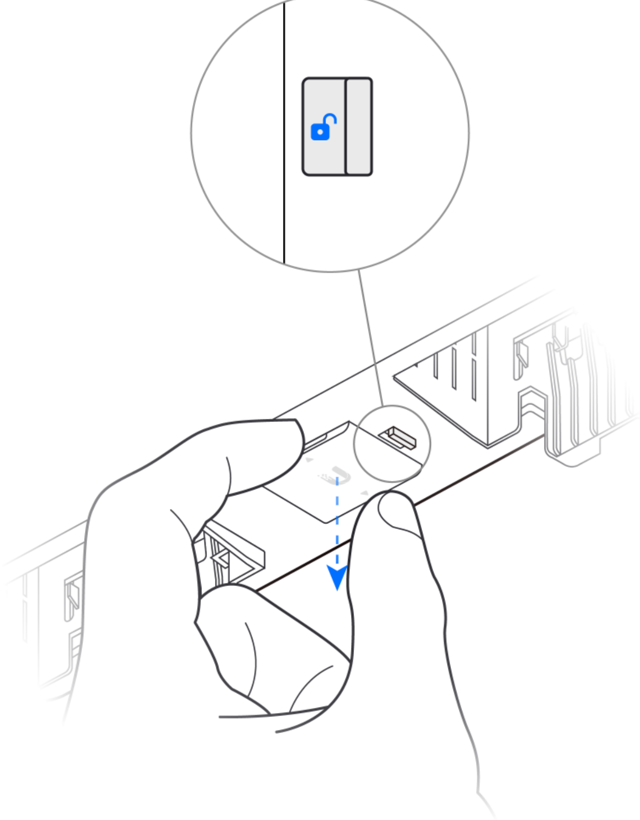

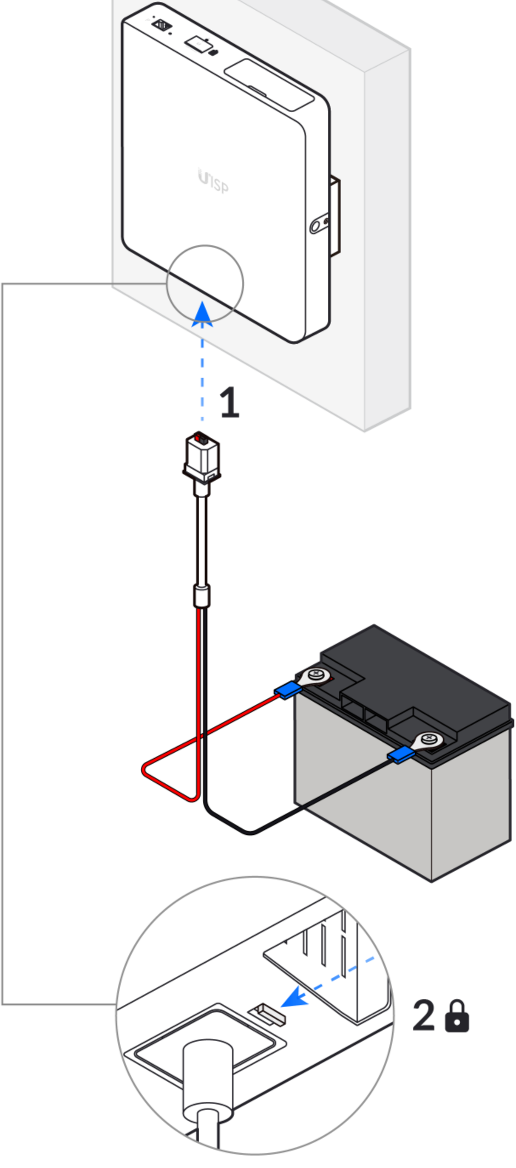

11

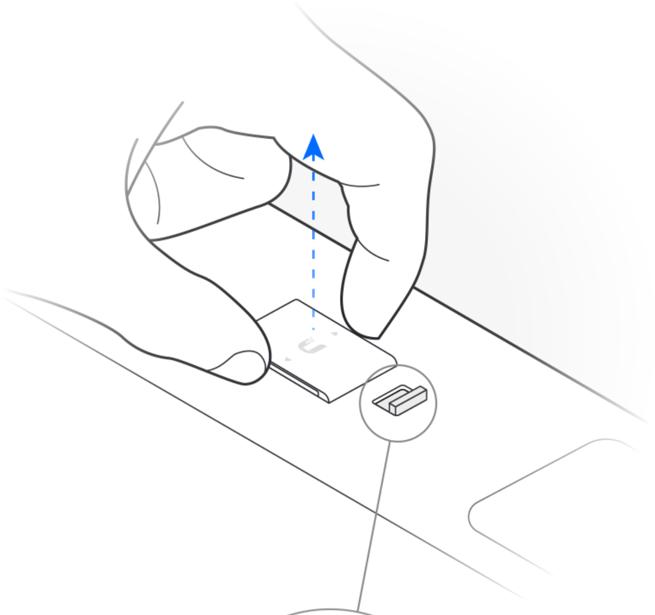

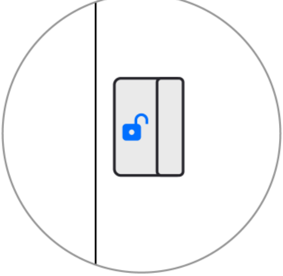

12

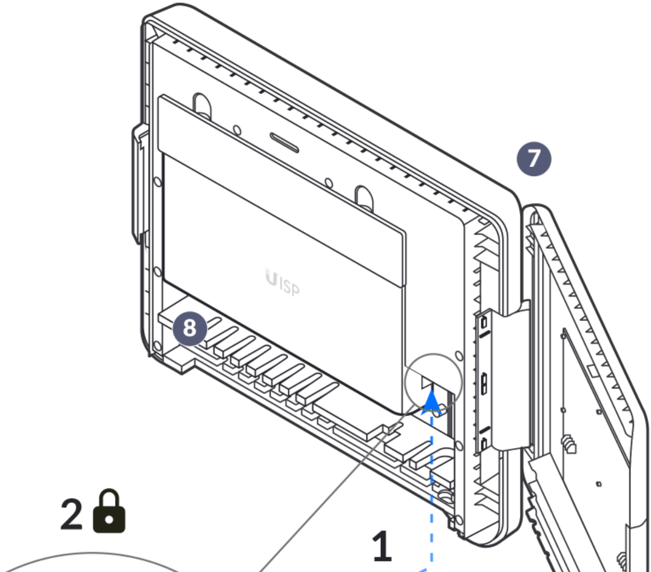

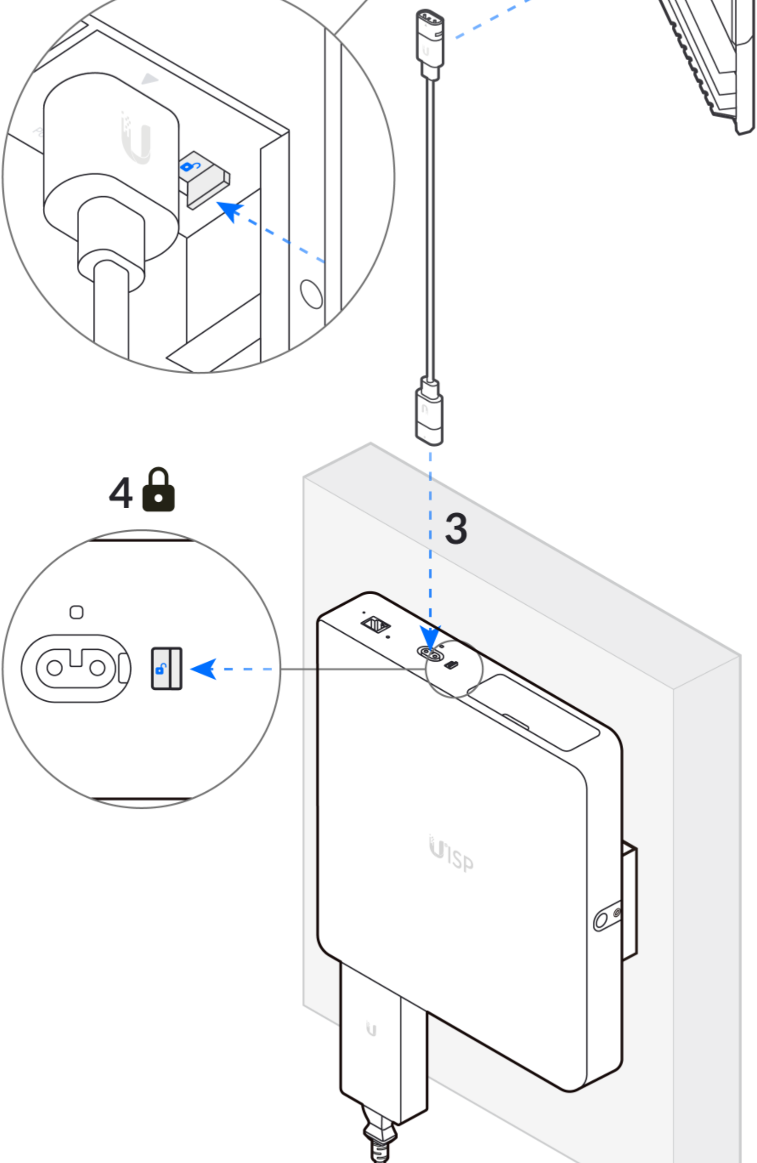

13

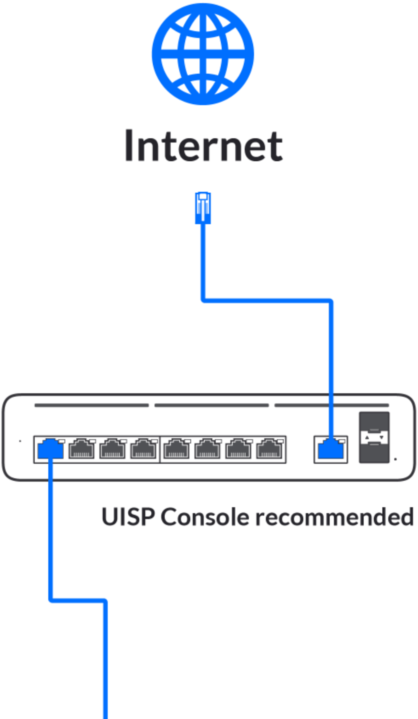
Internet
UISP Console recommended

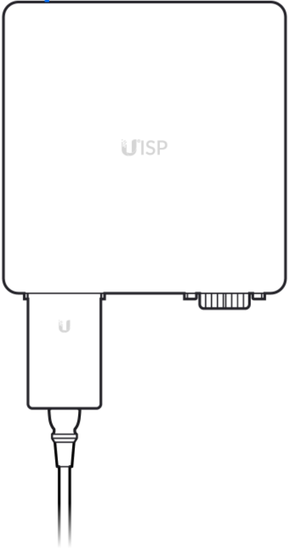

14

Download on the App Store

GET IT ON Google Play

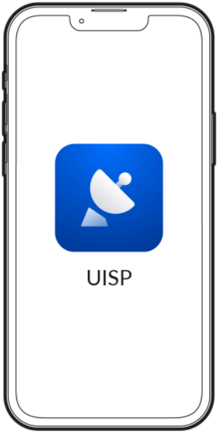

Get Answers
help.ui.com

UI Support

🔗

©2022 Ubiquiti Inc. All rights reserved. Ubiquiti, Ubiquiti Networks, the Ubiquiti U logo, and UISP are trademarks or registered trademarks of Ubiquiti Inc. in the United States and in other countries. App Store and the Apple logo are trademarks of Apple Inc., registered in the U.S. and other countries. Google Play and the Google Play logo are trademarks of Google LLC. All other trademarks are the property of their respective owners.