VERSION 1.0
JUNE 2023
702P08979

Xerox® C410 Color Printer

User Guide

© 2023 Xerox Corporation. All rights reserved. Xerox® is a trademark of Xerox Corporation in the United States and/or other countries.

Adobe®, Adobe PDF logo, Flash®, and PostScript® are trademarks or registered trademarks of Adobe Systems, Inc.

Apple®, Bonjour®, iPad®, iPhone®, iPod®, iPod touch®, AirPrint® and the AirPrint Logo®, Mac®, macOS®, and Macintosh® are trademarks or registered trademarks of Apple Inc. in the U.S. and other countries.

Gmail™ webmail service and Android™ mobile technology platform are trademarks of Google, Inc.

PCL® is a registered trademark of Hewlett-Packard Corporation in the United States and/or other countries.

IBM® and AIX® are registered trademarks of International Business Machines Corporation in the United States and/or other countries.

Microsoft®, Windows®, and Windows Server® are registered trademarks of Microsoft Corporation in the United States and other countries.

Mopria is a trademark of the Mopria Alliance.

UNIX® is a trademark in the United States and other countries, licensed exclusively through X/ Open Company Limited.

Linux® is a registered trademark of Linus Torvalds.

Wi-Fi CERTIFIED Wi-Fi Direct® is a trademark of the Wi-Fi Alliance.

BR38804

Contents

Safety 9

Notices and Safety 10
Conventions 11
Product Statements 11
Electrical Safety 15
General Guidelines 15
Power Cord 15
Emergency Power Off 16
Battery Safety 16
Operational Safety 17
Operational Guidelines 17
Printer Location 17
Printer Supplies 18
Consumable Information 18
Maintenance Safety 19
Environmental, Health and Safety Contact Information 20
Product Symbols 21

Learn About the Printer 25

Finding Information About the Printer 26
Finding the Printer Serial Number 28
Printer Configurations 29
Removing the Internal Packaging Materials 30
Using the Control Panel 32
Understanding the Status of the Indicator Light 33
Selecting Paper 34
Paper Guidelines 34
Paper Characteristics 34
Unacceptable Paper 35
Storing Paper 35
Selecting Preprinted Forms and Letterhead 36
Supported Paper Sizes 36

Set up, Install, and Configure 43

Selecting a Location for the Printer 44
Attaching Cables 46
Xerox® Easy Assist App 47
Installing the Xerox® Easy Assist App 48
Connecting to the Xerox Easy Assist App for Installed Printers 49
Adding Multiple Printers to the Xerox Easy Assist App 50
Setting up and Using the Home Screen Applications 51
Using the Home Screen 51

Customizing the Home Screen 52
Using Display Customization 53
Setting up Device Quotas 53
Managing Bookmarks 54
Managing Contacts 55
Setting up and Using the Accessibility Features 56
Activating Voice Guidance 56
Deactivating Voice Guidance 56
Navigating the Screen Using Gestures 56
Using the On-screen Keyboard 57
Enabling Magnification mode 58
Loading Paper and Specialty Media 59
Setting the Paper Size and Type 59
Configuring Universal Paper Settings 59
Loading the Tray 59
Loading the Manual Feeder 63
Loading the Multipurpose Feeder 65
Linking trays 68
Installing and Updating Software, Drivers, and Firmware 69
Installing the Printer Software 69
Adding Printers to a Computer 69
Updating Firmware 70
Exporting or Importing a Configuration File 71
Adding Available Options in the Print Driver 71
Installing Hardware Options 72
Installing Optional Trays 73
Networking 74
Connecting the Printer to a Wi-Fi Network 74
Connecting the Printer to a Wireless Network Using Wi-Fi Protected Setup (WPS) 74
Configuring Wi–Fi Direct 75
Connecting a Mobile Device to the Printer 75
Connecting a Computer to the Printer 76
Deactivating the Wi-Fi Network 76
Checking the Printer Connectivity 77

Secure the Printer 79

Locating the Security Slot 80
Erasing Printer Memory 81
Erasing Printer Storage Drive 82
Restoring Factory Default Settings 83

Print 85

Printing from a Computer 86
Printing From a Mobile Device 87
Printing from a Mobile Device Using Mopria™ Print Service 87
Printing from a Mobile Device using AirPrint® 87

Printing from a Mobile Device using Wi-Fi Direct® 87
Printing from a Flash Drive 88
Supported Flash Drives and File Types 89
Flash Drives 89
File Types 89
Configuring Confidential Jobs (Secure Print) 90
Printing Confidential and Other Held Jobs 91
For Windows Users 91
For Macintosh Users 91
Printing a Font Sample List 92
Printing a Directory List 93
Placing Separator Sheets Between Copies 94
Canceling a Print Job 95
Adjusting Toner Darkness 96

Use Printer Menus 97

Menu Map 98
Device 99
Preferences 99
Eco-Mode 100
Remote Operator Panel 101
Notifications 101
Power Management 103
Anonymous Data Collection 104
Accessibility 105
Restore Factory Defaults 105
Maintenance 106
Home Screen Customization 110
About this Printer 110
Print 112
Layout 112
Setup 113
Quality 115
Job Accounting 116
PDF 118
PostScript 118
PCL 119
Image 121
Paper 122
Tray Configuration 122
Media Configuration 122
USB Drive 124
Flash Drive Print 124
Network/Ports 126
Network Overview 126
Wireless 127

Wi-Fi Direct 130
AirPrint 130
Mobile Services Management 131
Ethernet 132
TCP/IP 133
SNMP 135
IPSec 137
802.1x 138
LPD Configuration 139
HTTP/FTP Settings 140
ThinPrint 140
USB 141
Restrict External Network Access 142
Universal Print 142
Security 145
Login Methods 145
Certificate Management 149
Schedule USB Devices 150
Security Audit Log 150
Login Restrictions 153
Confidential Print Setup 153
Disk Encryption 154
Erase Temporary Data Files 154
Solutions LDAP Settings 155
Miscellaneous 155
Reports 157
Menu Settings Page 157
Device 157
Print 157
Network 158
Supplies Plan 159
Plan Activation 159
Plan Conversion 159
Subscription Service 159
Troubleshooting 160
Printing the Menu Settings Page 161

Maintenance 163

Checking the Status of Parts and Supplies 164
Configuring Supply Notifications 165
Setting up E-mail Alerts 166
Viewing Reports 167
Ordering Supplies 168
Using Genuine Xerox Supplies 168
Replacing Supplies 169
Replacing a Toner Cartridge 169
Replacing the Waste Toner Bottle 170

Replacing the Imaging Kit 171
Resetting the Supply Usage Counters 175
Cleaning Printer Parts 176
Cleaning the Printer 176
Cleaning the Touch Screen 176
Cleaning the Feed Rolls 176
Saving Energy and Paper 178
Configuring Power Save Mode Settings 178
Adjusting the Brightness of the Display 178
Conserving Supplies 178
Moving the Printer to Another Location 179

Troubleshooting 181

Print Quality Problems 182
Printing Problems 183
Print Quality is Poor 183
Print Jobs do not Print 218
Slow Printing 219
Job Prints from the Wrong Tray or on the Wrong Paper 222
The Printer is not Responding 223
Network Connection Problems 225
Cannot open Embedded Web Server 225
Cannot Connect the Printer to the Wi-Fi Network 226
Issues with Supplies 228
Replace Cartridge Printer Region Mismatch 228
Non-Xerox Supplies 229
Clearing Jams 230
Avoiding Jams 230
Identifying Jam Locations 231
Paper Jam in the Standard Tray 232
Paper Jam in the Standard Output Tray 233
Paper Jam in the Manual Feeder 234
Paper Jam in Door A 235
Paper Feed Problems 237
Envelope Seals when Printing 237
Collated Printing does not Work 238
Paper Frequently Jams 239
Jammed Pages are not Reprinted 240
Color Quality Problems 241
Modifying the Colors in Printed Output 241
FAQ About Color Printing 241
The Print Appears Tinted 243
Contacting Customer Support 244

Regulatory Information 245

Basic Regulations 246
United States FCC Regulations 246
Regulatory Information for 2.4-GHz and 5-GHz Wireless Network Adapters 246
Laser Notice 247
Canada 247
European Union and European Economic Area Compliance 248
ENERGY STAR 249
Eurasian Economic Community Certification 251
Germany 251
Turkey RoHS Regulation 252
Ukraine RoHS Compliance 252
Safety Certification 253
Material Safety Data Sheets 254

Recycling and Disposal 255

All Countries 256
Battery Removal 256
North America 257
European Union 258
Disposal Outside of the European Union 258
Other Countries 259

Safety

This chapter contains:

Notices and Safety 10
Conventions 11
Electrical Safety 15
Operational Safety 17
Maintenance Safety 19
Environmental, Health and Safety Contact Information 20
Product Symbols 21

Your printer and the recommended supplies have been designed and tested to meet strict safety requirements. Attention to the following information ensures the continued safe operation of your Xerox printer.

Notices and Safety

Read the following instructions carefully before operating your printer. Refer to these instructions to ensure the continued safe operation of your printer.

Your Xerox® printer and supplies are designed and tested to meet strict safety requirements. These include safety agency evaluation and certification, and compliance with electromagnetic regulations and established environmental standards.

The safety and environment testing and performance of this product have been verified using Xerox® materials only.

Note: Unauthorized alterations, which can include the addition of new functions or connection of external devices, can affect the product certification. For more information, contact your Xerox representative.

Conventions

Note: A note identifies information that could help you.

Warning: A warning identifies something that could damage the product hardware or software.

Caution: A caution indicates a potentially hazardous situation that could injure you.

Different types of statements include:

CAUTION—POTENTIAL INJURY: Indicates a risk of injury.

CAUTION—SHOCK HAZARD: Indicates a risk of electrical shock.

CAUTION—HOT SURFACE: Indicates a risk of burn if touched.

CAUTION—TIPPING HAZARD: Indicates a crush hazard.

CAUTION—PINCH HAZARD: Indicates a risk of being caught between moving parts.

CAUTION—MOVING PARTS: Indicates a risk of laceration or abrasion injuries from rotating parts.

PRODUCT STATEMENTS

CAUTION—POTENTIAL INJURY: To avoid the risk of fire or electrical shock, connect the power cord to an appropriately rated and properly grounded electrical outlet that is near the product and easily accessible.

CAUTION—POTENTIAL INJURY: To avoid the risk of fire or electrical shock, use only the power cord provided with this product or the authorized replacement from the manufacturer.

CAUTION—POTENTIAL INJURY: Do not use this product with extension cords, multioutlet power strips, multioutlet extenders, or UPS devices. The power capacity of these types of accessories can be easily overloaded by a laser printer and may result in a risk of fire, property damage, or poor printer performance.

CAUTION—POTENTIAL INJURY: Do not use this product with an inline surge protector. The use of a surge protection device may result in a risk of fire, property damage, or poor printer performance.

CAUTION—POTENTIAL INJURY: To reduce the risk of fire, use only a 26 AWG or larger telecommunications (RJ-11) cord when connecting this product to the public switched telephone network. For users in Australia, the cord must be approved by the Australian Communications and Media Authority.

CAUTION—SHOCK HAZARD: To avoid the risk of electrical shock, do not place or use this product near water or wet locations.

CAUTION—SHOCK HAZARD: To avoid the risk of electrical shock, do not set up this product or make any electrical or cabling connections, such as the power cord, fax feature, or telephone, during a lightning storm.

CAUTION—POTENTIAL INJURY: Do not cut, twist, bind, crush, or place heavy objects on the power cord. Do not subject the power cord to abrasion or stress. Do not pinch the power cord between objects such as furniture and walls. If any of these things happen, a risk of fire or electrical shock results. Inspect the power cord regularly for signs of such problems. Remove the power cord from the electrical outlet before inspecting it.

CAUTION—SHOCK HAZARD: To avoid the risk of electrical shock, make sure that all external connections, such as Ethernet and telephone system connections, are properly installed in their marked plug-in ports.

CAUTION—SHOCK HAZARD: To avoid the risk of electrical shock, if you are accessing the controller board or installing optional hardware or memory devices sometime after setting up the printer, then turn the printer off, and unplug the power cord from the electrical outlet before continuing. If you have any other devices attached to the printer, then turn them off as well, and unplug any cables going into the printer.

CAUTION—SHOCK HAZARD: To avoid the risk of electrical shock when cleaning the exterior of the printer, unplug the power cord from the electrical outlet and disconnect all cables from the printer before proceeding.

CAUTION—SHOCK HAZARD: To avoid the risk of electrical shock, do not use the fax feature during a lightning storm.

CAUTION—POTENTIAL INJURY: If the printer weight is greater than 20 kg. (44 lb.), then it may require two or more people to lift it safely.

CAUTION—POTENTIAL INJURY: When moving the printer, follow these guidelines to avoid personal injury or printer damage:

- Make sure that all doors and trays are closed.
- Turn off the printer, and then unplug the power cord from the electrical outlet.
- Disconnect all cords and cables from the printer.
- If the printer has separate floor-standing optional trays or output options attached to it, then disconnect them before moving the printer.
- If the printer has a caster base, then carefully roll it to the new location. Use caution when passing over thresholds and breaks in flooring.
- If the printer does not have a caster base but is configured with optional trays or output options, then remove the output options and lift the printer off the trays. Do not try to lift the printer and any options at the same time.
- Always use the handholds on the printer to lift it.
- Any cart used to move the printer must have a surface able to support the full footprint of the printer.
- Any cart used to move the hardware options must have a surface able to support the dimensions of the options.
- Keep the printer in an upright position.
- Avoid severe jarring movements.
- Make sure that your fingers are not under the printer when you set it down.
- Make sure that there is adequate clearance around the printer.

CAUTION—TIPPING HAZARD: Installing one or more options on your printer or MFP may require a caster base, furniture, or other feature to prevent instability causing possible injury. For more information on supported configurations, contact the place where you purchased the printer.

CAUTION—TIPPING HAZARD: To reduce the risk of equipment instability, load each tray separately. Keep all other trays closed until needed.

CAUTION—HOT SURFACE: The inside of the printer might be hot. To reduce the risk of injury from a hot component, allow the surface to cool before touching it.

CAUTION—PINCH HAZARD: To avoid the risk of a pinch injury, use caution in areas marked with this label. Pinch injuries may occur around moving parts, such as gears, doors, trays, and covers.

CAUTION—POTENTIAL INJURY: This product uses a laser. Use of controls or adjustments or performance of procedures other than those specified in the User Guide can result in hazardous radiation exposure.

CAUTION—POTENTIAL INJURY: The lithium battery in this product is not intended to be replaced. There is a danger of explosion if a lithium battery is incorrectly replaced. Do not recharge, disassemble, or incinerate a lithium battery. Discard used lithium batteries according to the manufacturer instructions and local regulations.

This product is designed, tested, and approved to meet strict global safety standards with the use of specific manufacturer components. The safety features of some parts may not always be obvious. The manufacturer is not responsible for the use of other replacement parts.

Refer service or repairs, other than those described in the user documentation, to a service representative.

Ozone and Ventilation Information

Refer to *Facts about ozone* and *Facts about ventilation* at Health and Safety of Our Work Environment - Xerox.

SAVE THESE INSTRUCTIONS.

Electrical Safety

GENERAL GUIDELINES

Caution:

- Do not push objects into slots or openings on the printer. Touching a voltage point or shorting out a part could result in fire or electric shock.
- Do not remove the covers or guards that are fastened with screws unless you are installing optional equipment and are instructed to do so. Power off the printer when performing these installations. Disconnect the power cord when removing covers and guards for installing optional equipment. Except for user-installable options, there are no parts that you can maintain or service behind these covers.

The following are hazards to your safety:

- The power cord is damaged or frayed.
- Liquid is spilled into the printer.
- The printer is exposed to water.
- The printer emits smoke, or the surface is unusually hot.
- The printer emits unusual noise or odors.
- The printer causes a circuit breaker, fuse, or other safety device to activate.

If any of these conditions occur, do the following:

1. Power off the printer immediately.
2. Disconnect the power cord from the electrical outlet.
3. Call an authorized service representative.

POWER CORD

Use the power cord supplied with your printer.

Caution: To avoid risk of fire or electrical shock, do not use extension cords, power strips, or power plugs.

- Plug the power cord directly into a properly grounded electrical outlet. Ensure that each end of the cord is connected securely. If you do not know if an outlet is grounded, ask an electrician to check the outlet.
- Do not use a ground adapter plug to connect the printer to an electrical outlet that does not have a ground connection terminal.
- Verify that the printer is plugged into an outlet that is providing the correct voltage and power. Review the electrical specification of the printer with an electrician if necessary.
- Do not place the printer in an area where people can step on the power cord.
- Do not place objects on the power cord.
- Do not plug or unplug the power cord while the power switch is in the On position.

- If the power cord becomes frayed or worn, replace it.
- To avoid electrical shock and damage to the cord, grasp the plug when unplugging the power cord.

The power cord is attached to the printer as a plug-in device on the back of the printer. If it is necessary to disconnect all electrical power from the printer, disconnect the power cord from the electrical outlet.

EMERGENCY POWER OFF

If any of the following conditions occur, power off the printer immediately and disconnect the power cord from the electrical outlet. Contact an authorized Xerox service representative to correct the problem if:

- The equipment emits unusual odors or makes unusual noises.
- The power cable is damaged or frayed.
- A wall panel circuit breaker, fuse, or other safety device has been tripped.
- Liquid is spilled into the printer.
- The printer is exposed to water.
- Any part of the printer is damaged.

BATTERY SAFETY

One or more circuit boards in this printer contain a lithium battery. Do not attempt to repair or replace the lithium battery. If there is a problem with the battery, contact an authorized service representative to correct the problem.

Caution: If the battery on a circuit board is installed incorrectly, there is a risk of explosion.

The lithium battery in this printer contains Perchlorate Material. For information about the special handling procedures associated with Perchlorate Material, refer to https://dtsc.ca.gov/perchlorate/.

Operational Safety

Your printer and supplies were designed and tested to meet strict safety requirements. These include safety agency examination, approval, and compliance with established environmental standards.

Your attention to the following safety guidelines helps to ensure the continued, safe operation of your printer.

OPERATIONAL GUIDELINES

- Do not remove any trays when the printer is printing.
- Do not open the doors when the printer is printing.
- Do not move the printer when it is printing.
- Keep hands, hair, neckties, and so on, away from the exit and feed rollers.
- Covers, which require tools for removal, protect the hazard areas within the printer. Do not remove the protective covers.
- Do not override any electrical or mechanical interlock devices.
- Do not attempt to remove paper that is jammed deeply inside the printer. Switch off the printer promptly and contact your local Xerox representative.

Caution:

- The metallic surfaces in the fuser area are hot. Always use caution when removing paper jams from this area and avoid touching any metallic surfaces.
- To avoid a tip hazard, do not push or move the device with all the paper trays extended.

PRINTER LOCATION

- Place the printer on a level, solid, non-vibrating surface with adequate strength to hold its weight. To find the weight for your printer configuration, refer to *Physical Specifications* section of the User Guide.
- Do not block or cover the slots or openings on the printer. These openings are provided for ventilation and to prevent overheating of the printer.
- Place the printer in an area where there is adequate space for operation and servicing.
- When installing an office printer in a hallway or similar restricted area, additional space requirements can apply. Ensure that you comply with all workspace safety regulations, building codes, and fire codes for your area.
- Place the printer in a dust-free area.
- Do not store or operate the printer in an extremely hot, cold, or humid environment.
- Do not place the printer near a heat source.
- Do not place the printer in direct sunlight to avoid exposure to light-sensitive components.
- Do not place the printer where it is directly exposed to the cold air flow from an air conditioning system.
- Do not place the printer in locations susceptible to vibrations.

- For optimum performance, use the printer at the elevations specified in the *Environmental Specifications* section of the User Guide.

PRINTER SUPPLIES

- Use the supplies designed for your printer. The use of unsuitable materials can cause poor performance and a possible safety hazard.
- Follow all warnings and instructions marked on, or supplied with, the product, options, and supplies.
- Store all consumables in accordance with the instructions given on the package or container.
- Keep all consumables away from the reach of children.
- Never throw toner, toner cartridges, drum cartridges, or waste cartridges into an open flame.

Caution: When handling cartridges, for example toner and such, avoid skin or eye contact. Eye contact can cause irritation and inflammation. Do not attempt to disassemble the cartridge, which can increase the risk of skin or eye contact.

Warning: Use of non-Xerox supplies is not recommended. The Xerox Warranty, Service Agreement, and Total Satisfaction Guarantee do not cover damage, malfunction, or degradation of performance caused by use of non-Xerox supplies, or the use of Xerox supplies not specified for this printer. The Total Satisfaction Guarantee is available in the United States and Canada. Coverage could vary outside these areas. Please contact your Xerox representative for details.

CONSUMABLE INFORMATION

Caution: When handling cartridges such as ink/toner or fuser, avoid skin or eye contact. Eye contact can cause irritation and inflammation. Do not attempt to disassemble the cartridge. This can increase the risk of skin or eye contact.

- Store all consumables in accordance with the instructions given on the package or container.
- Keep all consumables away from the reach of children.
- Never throw dry ink/toner, print cartridges, or dry ink/toner containers into an open flame.

For information on Xerox® supplies recycling programs, go to www.xerox.com/recycling.

Maintenance Safety

Do not attempt any maintenance procedure that is not specifically described in the documentation supplied with your printer.

- Clean with a dry lint-free cloth only.
- Use supplies and cleaning materials only as directed.

> **Caution:** Do not use aerosol cleaners. Aerosol cleaners can cause explosions or fires when used on electromechanical equipment.

- Do not remove the covers or guards that are fastened with screws. Customer service items are not located behind these covers.
- In case of a Dry Ink or Toner Spill, use a broom or a wet cloth to wipe off spilled dry ink/toner. Sweep slowly to minimize generation of dust during clean up. Avoid using a vacuum. If a vacuum must be used, the unit should be designed for combustible dusts, with an explosion rated motor and non-conductive hose.

> **Caution:** The metallic surfaces in the fuser area are hot. Use caution when removing paper jams from this area and avoid touching any metallic surfaces.

- Do not burn any consumables or routine maintenance items. For information on Xerox® supplies recycling programs, go to www.xerox.com/gwa.

Environmental, Health and Safety Contact Information

For more information on Environment, Health, and Safety in relation to this Xerox product and supplies, contact:

- United States and Canada, only: 1-800-ASK-XEROX (1-800-275-9376)
- Web address: Environmental Health & Sustainability - Xerox
- Email request (world-wide): EHS-Europe@xerox.com

For product safety information in the United States and Canada, go to www.xerox.com/environment.

Product Symbols

SYMBOL	DESCRIPTION
	Caution: Indicates a hazard that can result in serious injury or death if not avoided.
	Hot Surface: Hot surface on or in the printer. To avoid personal injury, use caution.
	Warning: Moving parts. To avoid personal injury, use caution.
[No symbol]	Warning: Indicates a mandatory action to take to avoid damage to the property.
	Do not touch the part or area of the printer.
	Do not touch this part of the printer.
	Do not touch the part or area of the printer.
	Do not expose the drum cartridges to direct sunlight.
	Do not burn the item.
	Do not burn the toner cartridges.
	Do not burn the drum cartridges.

SYMBOL	DESCRIPTION
	Do not burn the toner waste cartridge.
	Pinch Hazard: To avoid personal injury, use caution in this area.
	Pinch Hazard: To avoid personal injury, use caution in this area.
	Do not remove the paper forcefully.
00:40 185°C 365°F	Hot Surface: Before handling, wait for the time indicated.
	On
	Off
	Standby
	Do not use paper attached with staples or any form of binding clip.
	Do not use folded, creased, curled, or wrinkled paper.
	Do not load or use inkjet paper.
	Do not reload paper that is used or printed previously.

SYMBOL	DESCRIPTION
	Do not use postcards.
	Do not use envelopes.
	Do not copy money.
	Add paper or media.
	Paper jam
	Lock
	Unlock
	Paper clip
	Cooling
	Elapsed time
	Supply paper
	1-Sided original document
	Hole-punched paper

SYMBOL	DESCRIPTION
	Load letterhead face up.
	Load letterhead face down.
	Load labels face down.
	USB: Universal Serial Bus
	LAN: Local Area Network
	Telephone Line
	Weight
	Services Home button
	This item can be recycled.

Learn About the Printer

This chapter contains:

Finding Information About the Printer 26
Finding the Printer Serial Number 28
Printer Configurations 29
Removing the Internal Packaging Materials 30
Using the Control Panel 32
Understanding the Status of the Indicator Light 33
Selecting Paper 34

Finding Information About the Printer

WHAT ARE YOU LOOKING FOR?	FIND IT HERE
Initial setup instructions	See the setup documentation that came with the printer.
• Printer software • Print driver • Printer firmware • Utility	Go to www.xerox.com, search for your printer model, and then select the driver, firmware, or utility that you need.
• Selecting and storing paper and specialty media • Loading paper • Configuring printer settings • Viewing and printing documents and photos • Configuring the printer on a network • Caring for and maintaining the printer • Troubleshooting and solving problems	Information Center: Go to www.xerox.com. How-to videos: Go to www.xerox.com. Touch Screen Guide: Go to www.xerox.com.
Setting up and configuring the accessibility features of your printer	Go to www.xerox.com.
Help information for using the printer software	Help for Microsoft Windows or Macintosh operating systems: Open a printer software program or application, and then click **Help**. Click **Help** to view context-sensitive information. Note: • Help is automatically installed with the printer software. • Depending on the operating system, the printer software is either in the printer program folder or on the desktop.

WHAT ARE YOU LOOKING FOR?	FIND IT HERE
• Documentation • Live chat support • E-mail support • Voice support	Go to www.xerox.com. Select your country or region, and then select your product to view the appropriate support site. Support contact information for your country or region can be found on the website or on the printed warranty that came with the printer. Have the following information ready when you contact customer support: • Place and date of purchase • Machine type and serial number For more information, refer to Finding the Printer Serial Number.
• Safety information • Regulatory information • Warranty information • Environmental information	Warranty information varies by country or region: • In the U.S.—See the Statement of Limited Warranty included with the printer, or go to www.xerox.com. • In other countries and regions—See the printed warranty that came with the printer Product Information Guide—See the documentation that came with the printer or go to www.xerox.com.

Finding the Printer Serial Number

To find the printer serial number:

1. Open Door A.
2. Locate the serial number.

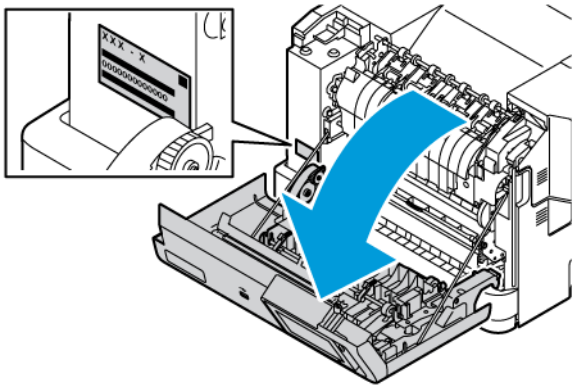

Printer Configurations

CAUTION—TIPPING HAZARD: Installing one or more options on your printer may require a caster base, furniture, or other feature to prevent instability causing possible injury. For more information on supported configurations, refer to Workplace and Digital Printing Solutions | Xerox.

CAUTION—TIPPING HAZARD: To reduce the risk of equipment instability, load each tray separately. Keep all other trays closed until needed.

Depending on your printer model, you can configure your printer by adding an optional 550+100-sheet Tray and two optional standard 550-sheet Trays.

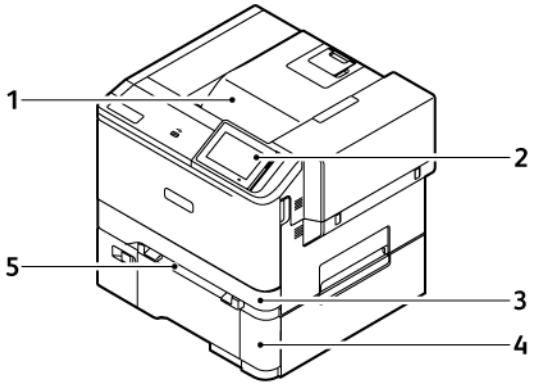

1. Standard Output Tray
2. Control Panel
3. Tray 1, Standard 250-sheet Tray
4. Tray 2, Optional 550+100-sheet Tray
5. Manual Feeder

Removing the Internal Packaging Materials

The printer comes with internal packing materials. Remove the packing materials and install the imaging unit and the toner cartridge, correctly.

1. At the front of the printer, open Door A.

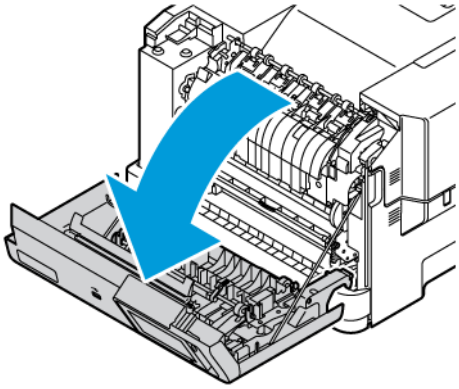

2. Remove the red plastic loops and clips.

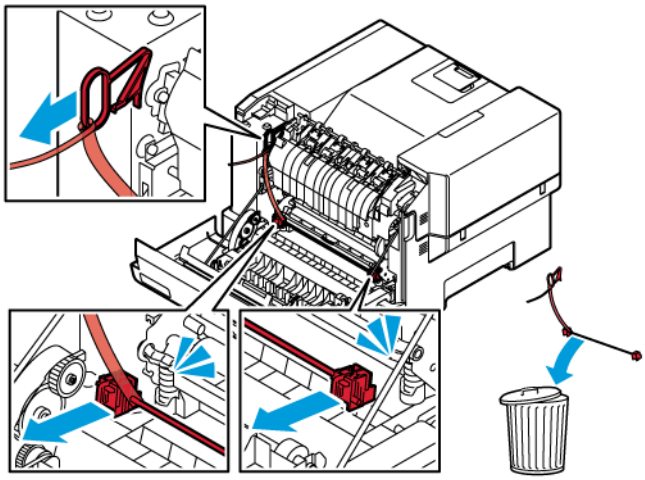

3. Close Door A.
4. At the right-side of the printer, open the Door B and remove the red plastic loop from the toner cartridge.

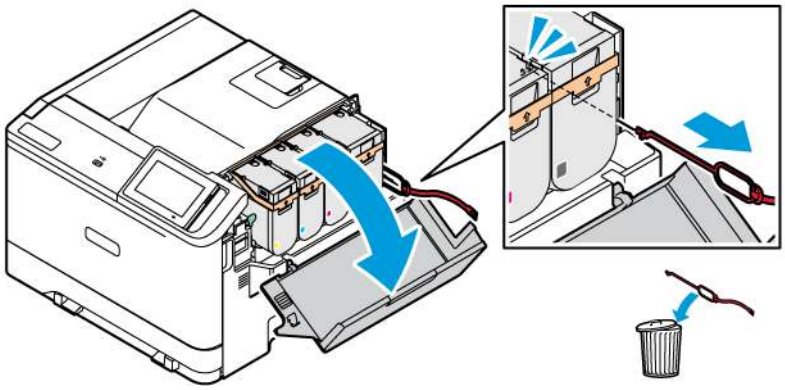

5. Close Door B.

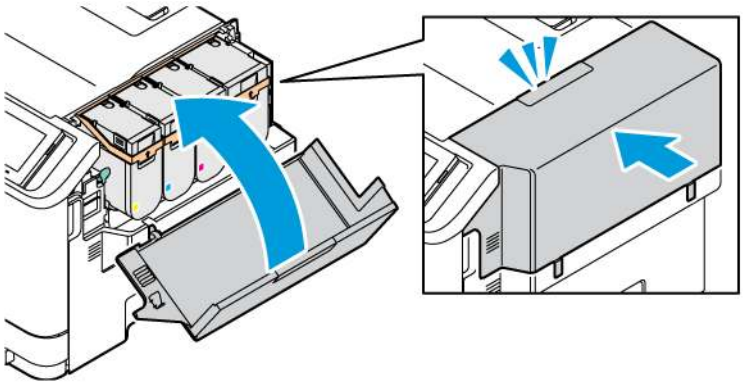

Using the Control Panel

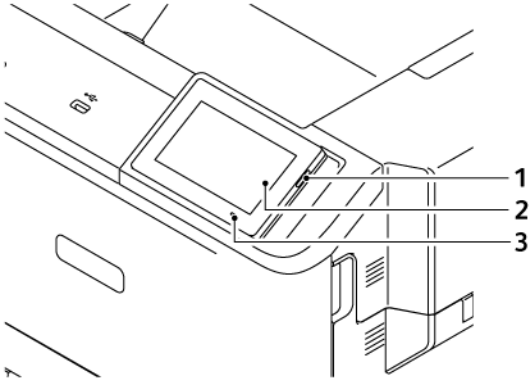

	CONTROL PANEL PART	FUNCTION
1	Power button	Turn on or turn off the printer. Note: To turn off the printer, press and hold the power button for five seconds. Set the printer to Sleep mode. Wake the printer from Sleep or Hibernate mode.
2	Display	View the printer messages and supply status. Set up and operate the printer.
3	Indicator light	Check the status of the printer.

Understanding the Status of the Indicator Light

INDICATOR LIGHT	PRINTER STATUS
Off	The printer is off.
Solid Blue	The printer is ready.
Blinking Blue	The printer is printing or processing data.
Blinking Red	The printer requires user intervention.
Solid Amber	The printer is in Sleep Mode.
Blinking Amber	The printer is in Deep Sleep or Hibernate Mode.

Selecting Paper

PAPER GUIDELINES

Use the appropriate paper to prevent jams and help ensure trouble-free printing.

- Always use new, undamaged paper.
- Before loading paper, know the recommended printable side of the paper. This information is usually indicated on the paper package.
- Do not use paper that has been cut or trimmed by hand.
- Do not mix paper sizes, types, or weights in the same tray. Mixing results in jams.
- Do not use coated papers unless they are specifically designed for electrophotographic printing.

For more information, refer to:

- Recommended Media List (United States): Recommended Media List - Xerox® Paper & Specialty Media.
- Recommended Media List (Europe): Recommended Printer Papers and Specialty Media - Xerox.

PAPER CHARACTERISTICS

The following paper characteristics affect print quality and reliability. Consider these factors before printing on them.

Weight

Trays can feed paper of varying weights. Paper lighter than 60 g/m^2 (16 lb.) may not be stiff enough to feed properly, and may cause jams. For more information, refer to Supported Paper Weights

Curl

Curl is the tendency for paper to curl at its edges. Excessive curl can cause paper feeding problems. Curl can occur after the paper passes through the printer, where it is exposed to high temperatures. Storing paper unwrapped in hot, humid, cold, or dry conditions can contribute to paper curling before printing and can cause feeding problems.

Smoothness

Paper smoothness directly affects print quality. If paper is too rough, toner cannot fuse to it properly. If paper is too smooth, it can cause paper feeding or print quality issues. We recommend the use of paper with 50 Sheffield points.

Moisture Content

The amount of moisture in paper affects both print quality and the printer ability to feed the paper correctly. Leave paper in its original wrapper until you use it. Exposure of paper to moisture changes can degrade its performance.

Before printing, store paper in its original wrapper in the same environment as the printer for 24 to 48 hours. The environment in which the paper is stored must be the same as the printer. Extend the time several days if the

storage or transportation environment is very different from the printer environment. Thick paper may also require a longer conditioning period.

Grain Direction

Grain refers to the alignment of the paper fibers in a sheet of paper. Grain is either grain long, running the length of the paper, or grain short, running the width of the paper.

For recommended grain direction, refer to Supported Paper Weights.

Fiber Content

Most high-quality xerographic paper is made from 100 percent chemically treated pulped wood. This content provides the paper with a high degree of stability, resulting in fewer paper feeding problems and better print quality. Paper containing fibers such as cotton can negatively affect paper handling.

UNACCEPTABLE PAPER

The following paper types are not recommended for use with the printer:

- Chemically treated papers used to make copies without carbon paper, also known as carbonless papers, carbonless copy paper (CCP), or no carbon required (NCR) paper
- Preprinted papers with chemicals that may contaminate the printer
- Preprinted papers that can be affected by the temperature in the printer fuser
- Preprinted papers that require a registration (the precise print location on the page) greater than ±2.3mm (±0.09in.), such as optical character recognition (OCR) forms

  In some cases, registration can be adjusted with a software application to successfully print on these forms.
- Coated papers (Erasable Bond), synthetic papers, thermal papers
- Rough-edged, rough or heavily textured surface papers, or curled papers
- Recycled papers that fail EN12281:2002 (European)
- Paper weighing less than 60 g/m^2 (16 lb.)
- Multiple-part forms or documents

STORING PAPER

Use these paper storage guidelines to help avoid jams and uneven print quality:

- Store paper in its original wrapper in the same environment as the printer for 24 to 48 hours before printing.
- Extend the time several days if the storage or transportation environment is very different from the printer environment. Thick paper may also require a longer conditioning period.
- For best results, store paper where the temperature is 21°C (70°F) and the relative humidity is 40 percent.
- Most label manufacturers recommend printing in a temperature range of 18–24°C (65–75°F) with relative humidity between 40 and 60 percent.
- Store paper in cartons, on a pallet or shelf, rather than on the floor.

- Store individual packages on a flat surface.
- Do not store anything on top of individual paper packages.
- Take paper out of the carton or wrapper only when you are ready to load it in the printer. The carton and wrapper help keep the paper clean, dry, and flat.

SELECTING PREPRINTED FORMS AND LETTERHEAD

- Use grain long paper.
- Use only forms and letterhead printed using an offset lithographic or engraved printing process.
- Avoid paper with rough or heavily textured surfaces.
- Use inks that are not affected by the resin in toner. Inks that are oxidation-set or oil-based generally meet these requirements; latex inks might not.
- Print samples on preprinted forms and letterheads considered for use before buying large quantities. This action determines whether the ink in the preprinted form or letterhead affects print quality.
- When in doubt, contact your paper supplier.
- When printing on letterhead, load the paper in the proper orientation for your printer.

For more information, refer to:

- Recommended Media List (United States): Recommended Media List - Xerox® Paper & Specialty Media.
- Recommended Media List (Europe): Recommended Printer Papers and Specialty Media - Xerox.

SUPPORTED PAPER SIZES

Note: Your printer model may have a 550+100-sheet tray as Tray 2, which consists of a 550-sheet tray and an integrated 100-sheet multipurpose feeder. The 550-sheet tray of the 550+100-sheet tray supports the same paper types as the 550-sheet tray. The integrated multipurpose feeder supports different paper sizes, types, and weights.

Supported Paper Sizes

PAPER SIZE	STANDARD 250–SHEET TRAY	OPTIONAL 550–SHEET TRAYS	MULTIPUR-POSE FEEDER	MANUAL FEEDER	TWO-SIDED PRINTING
A4 210 x 297 mm (8.27 x 11.7 in.)	✓	✓	✓	✓	✓
A5[1] 148 x 210 mm (5.83 x 8.27 in.)	✓	X	✓	✓	X
A5[2] 210 x 148 mm	✓	✓	✓	✓	X

PAPER SIZE	STANDARD 250–SHEET TRAY	OPTIONAL 550–SHEET TRAYS	MULTIPUR-POSE FEEDER	MANUAL FEEDER	TWO-SIDED PRINTING
(8.27 x 5.83 in.)					
A6 105 x 148 mm (4.13 x 5.83 in.)	✓	X	✓	✓	X
JIS B5 182 x 257 mm (7.17 x 10.1 in.)	✓	✓	✓	✓	X
Oficio (Mexico) 216 x 340 mm (8.5 x 13.4 in.)	✓	✓	✓	✓	✓
Hagaki 100 x 148 mm (3.94 x 5.83 in.)	✓	X	✓	✓	X
Statement 139.7 x 215.9 mm (5.5 x 8.5 in.)	✓	X	✓	✓	X
Executive 184.2 x 266.7 mm (7.25 x 10.5 in.)	✓	✓	✓	✓	X
Letter 215.9 x 279.4 mm (8.5 x 11 in.)	✓	✓	✓	✓	✓
Legal 215.9 x 355.6 mm (8.5 x 14 in.)	✓	✓	✓	✓	✓
Folio 215.9 x 330.2 mm (8.5 x 13 in.)	✓	✓	✓	✓	✓
Universal[2, 3]	✓	X	✓	✓	X

PAPER SIZE	STANDARD 250–SHEET TRAY	OPTIONAL 550–SHEET TRAYS	MULTIPUR-POSE FEEDER	MANUAL FEEDER	TWO-SIDED PRINTING
98.4 x 148–215.9 x 355.6 mm (3.86 x 5.83–8.5 x 14 in.)					
Universal[2, 3] 76.2 x 127–215.9 x 355.6 mm (3 x 5–8.5 x 14 in.)	X	X	✓	✓	X
Universal[2, 3] 148 x 210–215.9 x 355.6 mm (5.83 x 8.27–8.5 x 14 in.)	✓	✓	✓	✓	X
Universal[2, 3] 210 x 250–215.9 x 355.6 mm (8.27 x 10.98 – 8.5 x 14 in.)	✓	✓	✓	✓	✓
7 3/4 Envelope 98.4 x 190.5 mm (3.875 x 7.5 in.)	✓[4]	X	✓	✓	X
9 Envelope 98.4 x 225.4 mm (3.875 x 8.9 in.)	✓[4]	X	✓	✓	X
10 Envelope 104.8 x 241.3 mm (4.12 x 9.5 in.)	✓[4]	X	✓	✓	X
DL Envelope 110 x 220 mm (4.33 x 8.66 in.)	✓[4]	X	✓	✓	X

PAPER SIZE	STANDARD 250–SHEET TRAY	OPTIONAL 550–SHEET TRAYS	MULTIPUR-POSE FEEDER	MANUAL FEEDER	TWO-SIDED PRINTING
C5 Envelope 162 x 229 mm (6.38 x 9.01 in.)	✓[4]	X	✓	✓	X
B5 Envelope 176 x 250 mm (6.93 x 9.84 in.)	✓[4]	X	✓	✓	X
Other Envelope 98.4 x 162–176 x 250 mm (3.87 x 6.38–6.93 x 9.84 in)	✓[4]	X	✓	✓	X

[1] Load this paper size into the standard tray, the manual feeder, and the multipurpose feeder with the long edge entering the printer first.

[2] Load this paper size into the optional trays with the short edge entering the printer first.

[3] When Universal is selected, the page is formatted for 215.9 x 355.6 mm (8.5 x 14 in.) unless the size is specified by the software application.

[4] Load narrow paper with the short edge entering the printer first.

[5] When Other Envelope is selected, the page is formatted for 215.9 x 355.6 mm (8.5 x 14 in.) unless the size is specified by the software application.

Supported Paper Types

PAPER TYPE	STANDARD 250–SHEET TRAY	OPTIONAL 550–SHEET TRAYS	MULTIPUR-POSE FEEDER	MANUAL FEEDER	TWO-SIDED PRINTING
Plain paper	✓	✓	✓	✓	✓
Light Paper	✓	✓	✓	✓	✓
Heavy Paper	✓	✓	✓	✓	✓
Letter head	✓	✓	✓	✓	✓
Card stock	✓	✓	✓	✓	X
Recycled	✓	✓	✓	✓	✓
Bond	✓	✓	✓	✓	✓

PAPER TYPE	STANDARD 250–SHEET TRAY	OPTIONAL 550–SHEET TRAYS	MULTIPUR-POSE FEEDER	MANUAL FEEDER	TWO-SIDED PRINTING
Labels	✓	✓	✓	✓	X
Glossy	✓	✓	✓	✓	X
Vinyl Labels	✓	✓	✓	✓	X
Pre-Printed	✓	✓	✓	✓	✓
Envelopes	✓	X	✓	✓	X
Colored Paper	✓	✓	✓	✓	✓
Rough Cotton	✓	✓	✓	✓	✓
Custom Type 1–6	✓	✓	✓	✓	✓

Note:

- Your printer model may have an optional 550+100-sheet tray, which consists of a 550-sheet tray and an integrated 100-sheet multipurpose feeder. The 550-sheet tray of the optional 550+100-sheet tray supports the same paper types as the standard 550-sheet tray. The integrated multipurpose feeder supports different paper sizes, types, and weights.
- Labels, envelopes, and card stock always print at reduced speed
- Vinyl labels are supported for occasional use only and must be tested for acceptability. Some vinyl labels may feed more reliably from the multipurpose feeder

Supported Paper Weights

STANDARD 250–SHEET TRAY	OPTIONAL 550–SHEET TRAYS	MULTIPURPOSE FEEDER	MANUAL FEEDER	TWO-SIDED PRINTING
60–216 g/m² grain long (16–80 lb bond)	60–176 g/m² grain long (16–80 lb bond)	60–176 g/m² grain long (16–80 lb bond)	60–216 g/m² grain long (16–80 lb bond)	60–105 g/m² grain long (16–80 lb bond)

Note:

- Your printer model may have an optional 550+100-sheet tray, which consists of a 550-sheet tray and an integrated 100-sheet multipurpose feeder. The 550-sheet tray of the optional 550+100-sheet tray supports the same paper types as the standard 550-sheet tray. The integrated multipurpose feeder supports different paper sizes, types, and weights.
- For 60 to 176 g/m² (16–47 lb bond) paper, grain long fibers are recommended.

- Paper less than 75 g/m^2 (20 lb bond) must be printed with Paper Type set to Light Paper. Failure to do so may cause excessive curl which can lead to feeding errors, especially in more humid environments.

Set up, Install, and Configure

This chapter contains:

Selecting a Location for the Printer 44
Attaching Cables 46
Xerox® Easy Assist App 47
Setting up and Using the Home Screen Applications 51
Setting up and Using the Accessibility Features 56
Loading Paper and Specialty Media 59
Installing and Updating Software, Drivers, and Firmware 69
Installing Hardware Options 72
Installing Optional Trays 73
Networking 74

Selecting a Location for the Printer

- Leave enough room to open trays, covers, and doors and to install hardware options.
- Set up the printer near an electrical outlet.

CAUTION—POTENTIAL INJURY: To avoid the risk of fire or electrical shock, connect the power cord to an appropriately rated and properly grounded electrical outlet that is near the product and easily accessible.

CAUTION—SHOCK HAZARD: To avoid the risk of electrical shock, do not place or use this product near water or wet locations.

- Make sure that airflow in the room meets the latest revision of the ASHRAE 62 standard or the CEN Technical Committee 156 standard.
- Provide a flat, sturdy, and stable surface.
- Keep the printer:
  - Clean, dry, and free of dust
  - Away from stray staples and paper clips
  - Away from the direct airflow of air conditioners, heaters, or ventilators
  - Free from direct sunlight and humidity extremes
- Observe the recommended temperature and avoid fluctuations

  Operating temperature: 10–32.2° C (50–90° F)

  Storage temperature: 15.6–32.2° C (60–90° F)
- Allow the following recommended amount of space around the printer for proper ventilation:

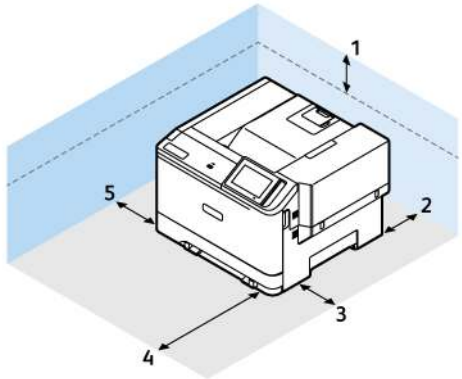

1	Top	254 mm (10 in.)
2	Rear	102 mm (4 in.)
3	Right side	76 mm (3 in.)

4	Front	508 mm (20 in.) Note: The minimum space needed in front of the printer is 75 mm (3 in.)
5	Left side	76 mm (3 in.)

Note: Additional space is needed for right side 305 mm (12 in.) and front side 508 mm (20 in.) of the printer for clearing jams and for toner and imaging unit replacements.

Attaching Cables

CAUTION—SHOCK HAZARD: To avoid the risk of electrical shock, do not set up this product or make any electrical or cabling connections, such as the power cord, fax feature, or telephone, during a lightning storm.

CAUTION—POTENTIAL INJURY: To avoid the risk of fire or electrical shock, connect the power cord to an appropriately rated and properly grounded electrical outlet that is near the product and easily accessible.

CAUTION—POTENTIAL INJURY: To avoid the risk of fire or electrical shock, use only the power cord provided with this product or the manufacturer's authorized replacement.

Warning—Potential Damage: To avoid loss of data or printer malfunction, do not touch the USB cable, any wireless network adapter, or the printer in the areas shown while actively printing.

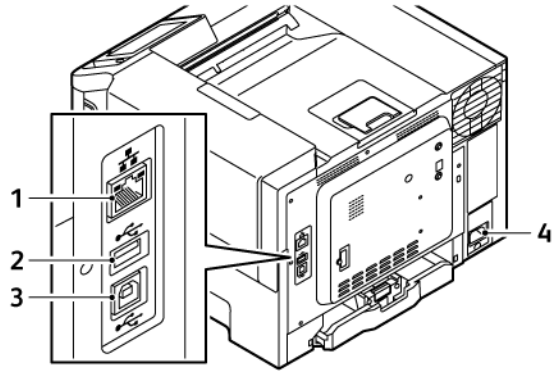

	PRINTER PORT	FUNCTION
1	Ethernet port	Connect the printer to a network.
2	USB port	Attach a keyboard or any compatible option.
3	USB printer port	Connect the printer to a computer.
4	Power cord socket	Connect the printer to an electrical outlet.

Xerox® Easy Assist App

Xerox Easy Assist app allows you to access and configure the printer from your smartphone. To access the printer from your smartphone, download and install the Xerox Easy Assist app on your mobile device. By installing the Xerox Easy Assist app on your smartphone, you can setup your new printer easily, manage its configuration, view alerts indicating supply requirements and order them, and get live troubleshooting support for your printer.

To install the Xerox Easy Assist app on your smartphone, you need to scan a QR Code or search the app in the Apple App Store or Google Play Store. There are two types of XEA QR Codes:

- **QR Code to acquire the XEA app**: This QR Code is for the initial installation of the app. To install the Xerox Easy Assist app for the first time, you are required to scan this QR Code using your smartphone camera. You can find this QR Code on the packaging box or the *Installation Guide* that comes with the printer.
- **QR Code to connect the mobile device to the printer**: This QR Code is to setup a wireless network connection between the smartphone and the printer. For example, connection to Wi-Fi Direct. For the printers with touchscreen User Interface, you can find this QR Code at the control panel of the printer within the device Install Wizard. The QR Code provides all key information to connect your smartphone and the printer without manually entering any technical information. To connect to the printer, scan this QR Code within the Xerox Easy Assist app. For more information, refer to Connecting to the Xerox Easy Assist App for Installed Printers.

Primary features of Xerox Easy Assist app are:

Set Up a New Printer

If you have the QR Code or IP Address available, you can set up a new Xerox printer with the help of Xerox Easy Assist app. On My Printers screen in the app, touch the **+** icon, then touch **Set Up a New Printer**. Follow the instructions from the app.

For more information, refer to Adding Multiple Printers to the Xerox Easy Assist App.

Printer Status

The status displays the printer information, such as readiness of the printer, toner level, and paper tray status for each tray. You can order parts and supplies through the Xerox Easy Assist app. If the toner level appears to be low, to order a new toner, select the **Toner** icon, then touch **Reorder**.

Alerts

The Xerox Easy Assist app can notify you of any errors or problems in the printer. To view the error statement, touch the **Bell** icon.

Print

You can perform a print job through the Xerox Easy Assist app. In the app, select your printer, then touch **Print**. Select the document that you need to print from your mobile device, confirm the print settings, then touch **Print**.

Device Settings

You can view and edit your printer settings from the **Device Settings** tab. If you have not set up a password during the initial setup, to view or edit existing printer settings, you need to set up the password.

Support

You can request support and find solutions for printer-related problems through the Xerox Easy Assist app. In the app, select your printer, then touch **Support**. It connects you to Xerox's Support Agent Live Chatbot.

Set Up Computer

You can download Print and Scan Drivers for your printer through Xerox Easy Assist app. In the app, select your printer, then touch **Set Up Computer**. In the Email field, type your registered email address, then touch the **+** icon to add your email. To download and install the Print and Scan Drivers, the app sends a Quick Link to your email address.

Print Test Page

To confirm that all settings are correct, you can print a test page. In the app, select your printer, then touch **Print Test Page**.

Remove a Printer

You can remove a printer from the Xerox Easy Assist app. On your app, select a printer, then touch **Remove**.

INSTALLING THE XEROX® EASY ASSIST APP

To install and use the Xerox Easy Assist app, do the following:

1. To watch a helpful video on how to unpack your printer, scan the QR Code from the packaging box or the Installation Guide that came with your printer, using your smartphone camera.

   Based on your smartphone, you are prompted to download the app from Apple App Store or Google Play Store. Accept the End-User License Agreement (EULA), then follow the instructions that appear on the app.

2. For initial setup when the printer is powered on for the first time, the initial setup wizard appears. On the printer control panel, do the following:

   a. Select your **Language**, then touch **Next**.

      The Xerox Easy Assist Mobile App screen appears.

   b. To use your mobile device to set up and manage your printer, touch **Yes**.

      Get the App screen appears to confirm the type of your mobile device. Choose any one option:

      - **iOS**: To install the Xerox Easy Assist app for your iPhone, select this option.
      - **Android**: To install the Xerox Easy Assist app for your Android mobile device, select this option.
      - **I have the App**: If you have installed Xerox Easy Assist app on your mobile device already, select this option.

3. If you have selected iOS or Android option, a screen appears to help you download the app. On the control panel, touch **Show QR Code** option.

   A screen appears with the QR Code. To install the app, scan the QR Code using your smartphone camera.

4. Download and install the Xerox Easy Assist app on your smartphone:

   - For Android phones: Go to Google Play Store, then search for Xerox Easy Assist app.
   - For iOS or iPhones: Go to Apple App Store, then search for Xerox Easy Assist app.

5. When you install the app for the first time on your smartphone, for End-User License Agreement (EULA), touch **I Agree**.

   Note: The Xerox Easy Assist App has instructions that help you to unpack the printer from its packaging box. To watch a helpful video on how to unpack your printer, scan the QR Code on the packaging box or the *Installation Guide* that came with your printer, using your smartphone camera. Accept the End-User License Agreement (EULA), then follow the instructions that appear on the app.

6. Follow the instructions that appear on the app. To connect your smartphone with the printer, touch **Connect To My Printer**.
7. On the printer control panel, to connect to the app, touch **Show QR Code** option. The second or Connect-QR Code appears.
8. Scan the QR Code through the Xerox Easy Assist app. Follow the instructions that appear on the app.

   When the connection is configured, your smartphone and the printer share the same Wireless network, temporarily.

9. With the support of Xerox Easy Assist app, complete the general settings and register the printer on the network.
   General settings include Admin Password, Connectivity, Measurements, Date and Time, Sound, Power Saver settings, and more.

   Note: Ensure that your smartphone is connected to the same Wireless or wired network as the printer and they can communicate after the setup is complete.

10. To complete the initial setup in the app, type the necessary information for your printer, then touch **Complete Setup**.

    The Welcome screen appears.

11. When the initial setup is complete, with the Xerox Easy Assist app, you can perform the following:
    - Setting up a new printer
    - Checking the printer status and order supplies
    - Downloading Print and Scan Drivers
    - Printing
    - Getting troubleshooting support
    - Removing a printer from the XEA app My Printers list

    For Xerox Easy Assist app features, refer to Xerox® Easy Assist App.

CONNECTING TO THE XEROX EASY ASSIST APP FOR INSTALLED PRINTERS

To install and use the Xerox Easy Assist (XEA) app for a printer that is already installed and connected to your network, you can find the QR Code on the control panel.

- **Connecting through QR Code:**
  1. Download the Xerox Easy Assist (XEA) app from Apple App Store or Google Play Store
  2. Open the XEA app. Touch **+** or **Add** from the top of the screen.
  3. The Add Printer screen appears. From the Add Existing Printer section, touch **QR Code**.

4. On the printer control panel, touch the status bar on top of the Home screen to access the Notification Center.
5. From the Notification Center, touch the QR Code icon for **Connected to Network**. A new window opens for **Connect to Xerox Easy Assist Mobile App** that displays the Connect QR Code.
6. Scan the QR Code using the XEA app. This adds your printer to My Printers list in the XEA app.

- **Connecting through IP Address:**
  1. Download the Xerox Easy Assist (XEA) app from Apple App Store or Google Play Store.
  2. Open the XEA app. Touch **+** or **Add** from the top of the screen.
  3. The Add Printer screen appears. From the Add Existing Printer section, touch **IP Address**.
  4. On the printer control panel, refer to the IP Address in the status bar on top of the Home screen of the printer.
  5. Type the IP Address in the XEA app. This adds your printer to My Printers list in the XEA app.

ADDING MULTIPLE PRINTERS TO THE XEROX EASY ASSIST APP

If your printer is already set up on your network and the initial setup is complete, through the XEA app, you can include additional printers directly to the list of My Printers. You can see the printer status, get print drivers, and get Chatbot support. To add printers that are on the network, open the XEA app Home page in your smartphone. On the My Printers screen, touch the **+** icon, then refer to the following options:

- **Setting Up a New Printer**: To set up a new printer from your smartphone XEA app, on the Add Printer screen, select **Set Up a New Printer**. Follow the instructions that appear on the printer control panel and on your mobile device.
- **Adding an Existing Printer**: To add an existing printer that is already connected to the network, select any one from these options:
  - **QR Code**: To scan the printer QR Code with the XEA app scanner, touch **QR Code**. To find the QR Code of the printer, refer to Connecting to the Xerox Easy Assist App for Installed Printers.
  - **IP Address**: To connect to the printer by typing the IP Address manually, touch **IP Address**. Type the IP Address of the printer, then touch **OK**. For more information, refer to Connecting to the Xerox Easy Assist App for Installed Printers.
- **Finding the Nearby Network Printers**: When your smartphone is connected to the same wireless or wired network as the printer, to find nearby printers, select **Printers Around Me**. The app looks for nearby printers on the network:
  - If the app finds the printer, you can select and add the printer directly.
  - If the app is unable to find the printer you are looking for, then you can add the printer by typing its IP address.

Note: If the printer and mobile device cannot communicate, ensure that they are on the same network.

Setting up and Using the Home Screen Applications

USING THE HOME SCREEN

Note: Your home screen may vary depending on your home screen customization settings, administrative setup, and active embedded solutions.

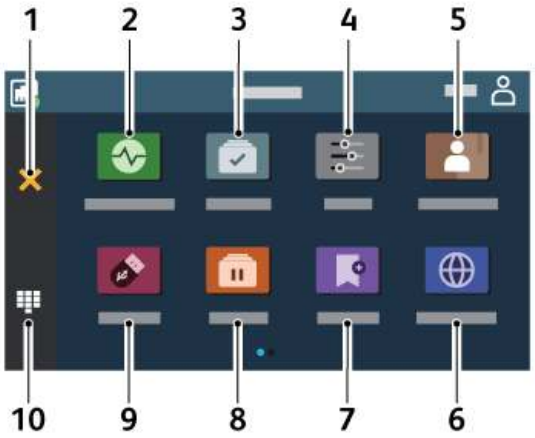

	ICON	FUNCTION
1	Stop or Cancel button	Stop the current printer task.
2	Status/Supplies	• Show a warning or error message whenever the printer requires intervention to continue processing. • View more information on the printer warning or message and how to clear it. Note: You can also access this setting by touching the top section of the home screen.
3	Job Queue	Show all the current print jobs. Note: You can also access this setting by touching the top section of the home screen.
4	Settings	Access the printer menus.
5	Address Book	Manage a contact list that other applications on the printer can access.

	ICON	FUNCTION
6	Change Language	Change the language on the display. Note: Sometimes this option is hidden from view. It is not a default icon on the Control Panel. You can customize the home screen to view the icon.
7	Bookmarks	To print frequently accessed documents that are stored in servers or on the web. Note: Sometimes this option is hidden from view. It is not a default icon on the Control Panel. You can customize the home screen to view the icon.
8	Held Jobs	Show the print jobs that are held in the printer memory.
9	USB Drive	Print photos and documents from a flash drive.
10	On-screen keypad	Enter numbers or symbols in an input field.

CUSTOMIZING THE HOME SCREEN

1. Open a web browser, and then type the printer IP address in the address field.
   - View the printer IP address on the printer home screen. The IP address appears as four sets of numbers separated by periods, such as 123.123.123.123.
   - If you are using a proxy server, then temporarily disable it to load the web page correctly.
2. Click **Settings > Device > Home Screen Customization**.
3. Do one or more of the following:
   - To add an icon to the home screen, click **+**, select the app name, and then click **Add**.
   - To remove a home screen icon, select the app name, and then click **Remove**.
   - To customize an app name, select the app name, click **Edit**, and then assign a name. Click **Save**.
   - To restore the name of an app, select the app name, click **Edit**, and then select **Save**.
   - To add a space between apps, click **+**, select **BLANK SPACE**, and then click **Add**.
   - To arrange the apps, drag the app names in the order that you want.

- To restore the default home screen, click **Restore home screen**. Click **Restore**, and then click **OK**.

4. Apply the changes.

USING DISPLAY CUSTOMIZATION

Before using the application, make sure to enable and configure the screen saver, slide show, and wallpaper settings. From the Embedded Web Server, click **Apps > Display Customization > Configure**.

Managing Screen Saver and Slide Show Images

1. From the Embedded Web Server, click **Apps > Display Customization > Configure**.
2. In the Screen Saver and Slide show Images section, add, edit, or delete an image.
   - You can add up to 10 images.
   - When enabled, the status icons appear on the screen saver only when there are errors, warnings, or cloud-based notifications.
3. Apply the changes.

Changing the Wallpaper Image

1. From the home screen, touch **Change Wallpaper**.
2. Select an image to use.
3. Apply the changes.

Running a Slide Show from a Flash Drive

1. Insert a flash drive into the front USB port.
2. From the home screen, touch **Slide show**.

Note: You can remove the flash drive after the slide show starts, but the images are not stored in the printer. If the slide show stops, then insert the flash drive again to view the images.

SETTING UP DEVICE QUOTAS

- This application is supported only in printers with the optional Productivity Kit.
- For information on how to configure the application settings, refer to *Device Quotas Administrator Guide*.

1. Open a web browser, and then type the printer IP address in the address field.
   - View the printer IP address on the printer home screen. The IP address appears as four sets of numbers separated by periods, such as 123.123.123.123.
   - If you are using a proxy server, then temporarily disable it to load the web page correctly.
2. Click **Apps > Device Quotas > Configure**.
3. In the User Accounts section, add or edit a user, and then set the user quota.
4. Apply the changes.

MANAGING BOOKMARKS

Creating Bookmarks

Use bookmarks to print frequently accessed documents that are stored in servers or on the web.

1. Open a web browser, and then type the printer IP address in the address field.
   - View the printer IP address on the printer home screen. The IP address appears as four sets of numbers separated by periods, such as 123.123.123.123.
   - If you are using a proxy server, then temporarily disable it to load the web page correctly.
2. Click **Bookmarks > Add Bookmark**, and then type a bookmark name.
3. Select an Address protocol type, and then do one of the following:
   - For HTTP and HTTPS, type the URL that you want to bookmark.
   - For HTTPS, make sure to use the host name instead of the IP address. For example, type myWebsite.com/sample.pdf instead of typing 123.123.123.123/sample.pdf. Make sure that the host name also matches the Common Name (CN) value in the server certificate. For more information on obtaining the CN value in the server certificate, see the help information for your web browser.
   - For FTP, type the FTP address. For example, myServer/myDirectory. Enter the FTP port. Port 21 is the default port for sending commands.
   - For SMB, type the network folder address. For example, myServer/myShare/myFile.pdf. Type the network domain name.
   - If necessary, select the Authentication type for FTP and SMB.

   To limit access to the bookmark, enter a PIN.

   Note: The application supports the following file types: PDF, JPEG, TIFF, and HTML-based web pages. Other file types such as DOCX and XLXS are supported in some printer models.
4. Click **Save**.

Creating Folders

1. Open a web browser, and then type the printer IP address in the address field.
   - View the printer IP address on the printer home screen. The IP address appears as four sets of numbers separated by periods, such as 123.123.123.123.
   - If you are using a proxy server, then temporarily disable it to load the web page correctly.
2. Click **Bookmarks > Add Folder**, and then type a folder name.

   Note: To limit access to the folder, enter a PIN.
3. Click **Save**.

   Note: You can create folders or bookmarks inside a folder. To create a bookmark, refer to Creating Bookmarks.

MANAGING CONTACTS

1. From the home screen, touch **Address Book**.
2. Do one or more of the following:
   To add a contact, touch **Menu** on top of the screen, and then touch **Create Contact**. If necessary, specify a login method to allow application access.
   To delete a contact, touch **Menu** on top of the screen, touch **Delete Contacts**, and then select the contact.
   To edit contact information, touch the contact name.
   To create a group, touch **Menu** on top of the screen, and then touch **Create Group**. If necessary, specify a login method to allow application access.
   To delete a group, touch **Menu** on top of the screen, touch **Delete Groups**, and then select the group.
   To edit a contact group, touch **GROUPS**, then select a group name. To select the action you want to make, touch **Menu** again.
3. Apply the changes.

Setting up and Using the Accessibility Features

ACTIVATING VOICE GUIDANCE

From the Home Screen

1. In one motion and using one finger, slowly swipe left then up on the display until you hear a voice message.
   - For printer models without built-in speakers, use headphones to hear the message.
2. Using two fingers, touch **OK**.
   - If the gesture does not work, then apply more pressure.

From the Keyboard

1. Press and hold the **5** key until you hear a voice message.
   - For printer models without built-in speakers, use headphones to hear the message.
2. Press **Tab** to navigate the focus cursor to the OK button, and then press **Enter**.
   - When Voice Guidance is activated, always use two fingers to select any item on the display.
   - Voice Guidance has limited language support.

DEACTIVATING VOICE GUIDANCE

1. In one motion and using one finger, slowly swipe left then up on the display until you hear a voice message.
   - For printer models without built-in speakers, use headphones to hear the message.
2. Using two fingers, do either of the following:
   - Touch **Voice Guidance**, then touch **OK**.
   - Touch **Cancel**.

   If the gesture does not work, then apply more pressure.
3. You can also deactivate Voice Guidance by doing either of the following:
   - Using two fingers, double tap the home screen.
   - Press the power button to put the printer in Sleep or Hibernate mode.

NAVIGATING THE SCREEN USING GESTURES

Note: Most of the gestures are applicable only when Voice Guidance is activated.

Note: Enable Magnification to use the zoom and pan gestures.

Note: Use a physical keyboard to type characters and adjust certain settings.

GESTURE	FUNCTION
Swipe left then up using one finger	Launch Accessibility mode. Use the same gesture to exit Accessibility mode. Note: This gesture is also applicable when the printer is in normal mode.
Double-tap using one finger	Select an option or item on the screen when the item is on focus.
Tap using two fingers	Select an option or item when the item is not on focus.
Double-tap the home icon using two fingers	Deactivate the Accessibility mode.
Triple-tap using one finger	Zoom in or zoom out text and images.
Swipe right or swipe down using one finger	Move to the next item on the screen.
Swipe left or swipe up using one finger	Move to the previous item on the screen.
Swipe up then down using one finger	Move to the first item on the screen.
Pan	Access parts of the zoomed image that are beyond the limit of the screen. Note: Use two fingers to drag a zoomed image.
Swipe up then right using one finger	Increase the volume. Note: This gesture is also applicable when the printer is in normal mode.
Swipe down then right using one finger	Decrease the volume. Note: This gesture is also applicable when the printer is in normal mode.
Swipe up then left using one finger	Exit an application and return to the home screen.
Swipe down then left using one finger	Go back to the previous setting.

USING THE ON-SCREEN KEYBOARD

When the on-screen keyboard appears, do one or more of the following:

- Touch a key to announce and type the character in the field.
- Drag a finger across different characters to announce and type the character in the field.
- Touch a text box using two fingers to announce the characters in the field.
- Touch **Backspace** to delete characters.

ENABLING MAGNIFICATION MODE

1. In one motion and using one finger, slowly swipe left then up on the display until you hear a voice message.
   - For printer models without built-in speakers, use headphones to hear the message.
2. Using two fingers, do the following:
   a. Touch **Magnification mode**.
   b. Touch **OK**.

   If the gesture does not work, then apply more pressure.

For more information on navigating a magnified screen, refer to Navigating the Screen Using Gestures.

Loading Paper and Specialty Media

SETTING THE PAPER SIZE AND TYPE

1. From the home screen, touch **Settings > Paper > Tray Configuration > Paper Size/Type**, then select a paper source.
2. Set the paper size and type.

CONFIGURING UNIVERSAL PAPER SETTINGS

1. From the home screen, touch **Settings > Paper > Media Configuration > Universal Setup**.
2. Configure the settings.

LOADING THE TRAY

CAUTION—TIPPING HAZARD: To reduce the risk of equipment instability, keep the tray closed until needed.

1. Remove the tray.

Note: To avoid paper jams, do not remove the tray while the printer is busy.

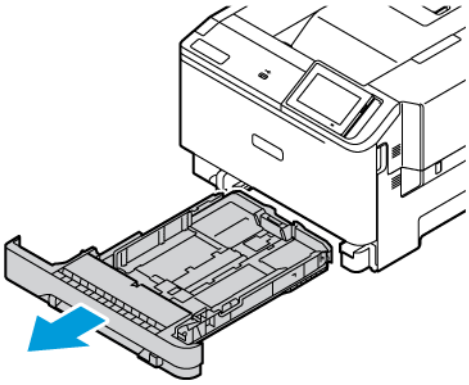

2. Adjust the guides to match the size of the paper that you are loading.

Note: Use the indicators on the bottom of the tray to position the guides.

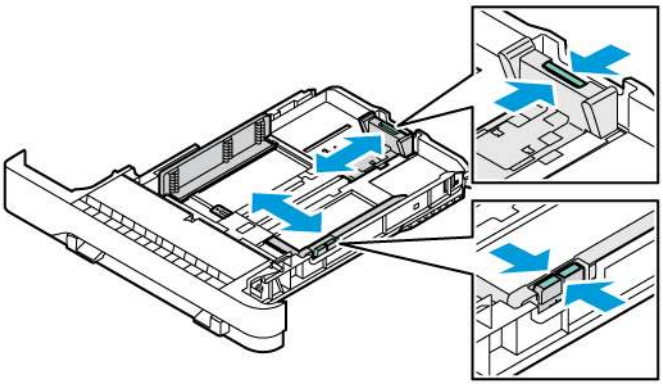

3. Flex, fan, then align the paper edges before loading.

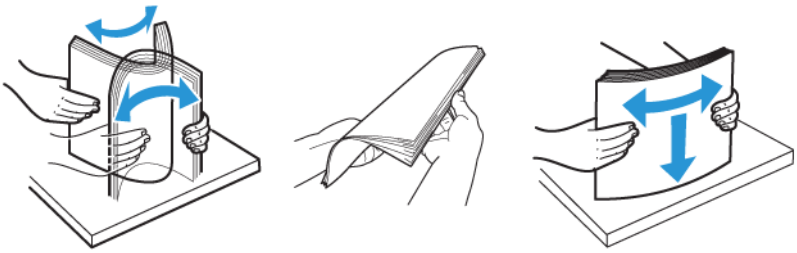

4. Load letterhead with the printable side face up and the top edge entering the printer last.

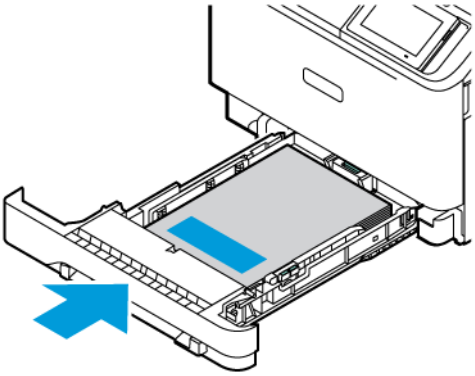

5. To avoid paper jams, make sure that the stack height is below the maximum paper fill indicator.

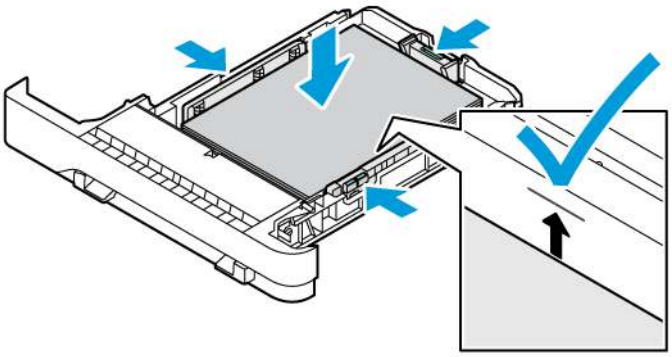

6. Insert the tray.
7. Load envelopes with the flap on a long edge and the flaps faced down and closed. Keep the flaps toward the right. To avoid the jams, flatten the envelopes

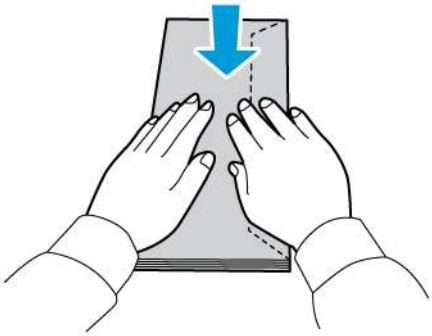

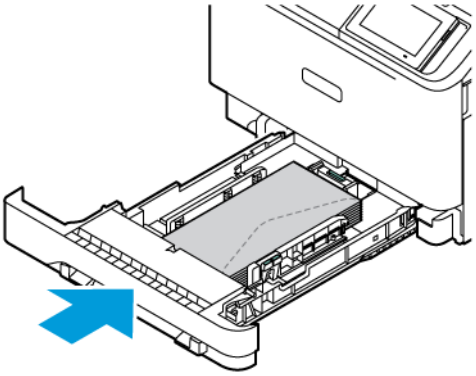

8. Load the paper in the tray with the hole punch on the left side of the tray.

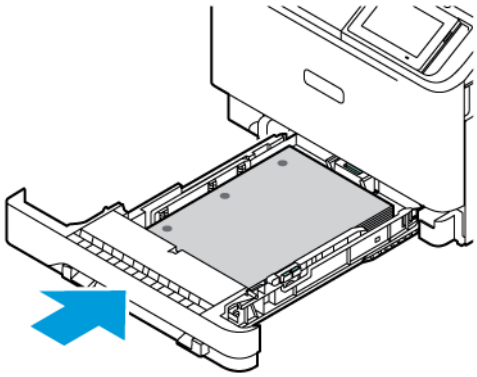

9. Load the labels face up in the tray, then adjust the length and width of the paper guides to fit the labels. Make sure that the stack height is below the maximum paper fill indicator.

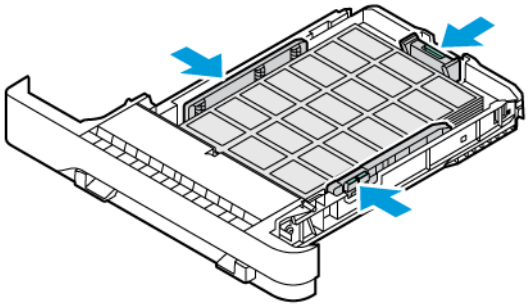

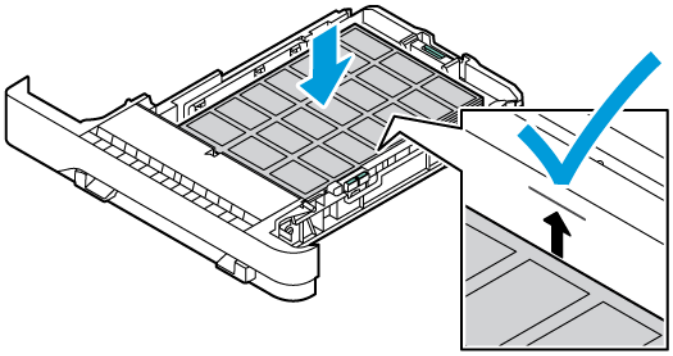

10. Close the tray.

LOADING THE MANUAL FEEDER

1. Adjust the edge guides to match the width of the paper that you are loading.
   Make sure that the guides fit snugly against the paper, but not too tight as to cause the paper to buckle.

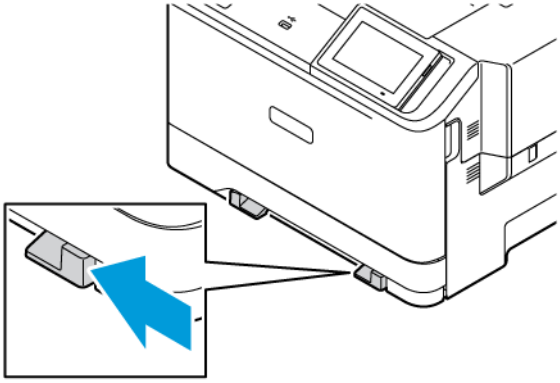

2. Load a sheet of paper with the printable side face-down.
   Make sure that the paper is loaded straight to avoid skewed or crooked print.
   - Load letterhead with the printable side facedown and the top edge entering the printer first for one-sided printing.

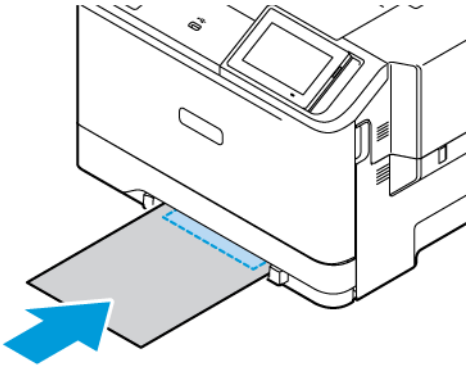

   - Load letterhead with the printable side face-up and the top edge entering the printer last for two-sided printing.

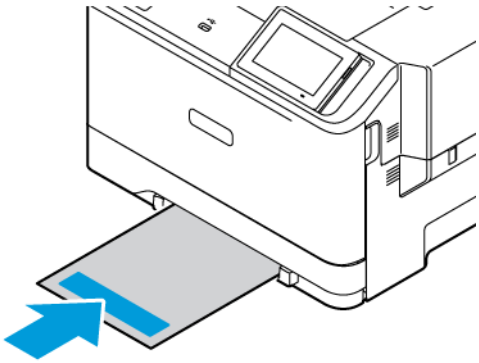

   - Load envelope with the flap side up and against the right side of the paper guide.

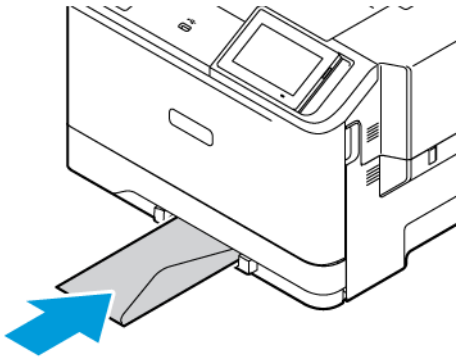

- Load the paper with the hole punch on the left side of the tray.

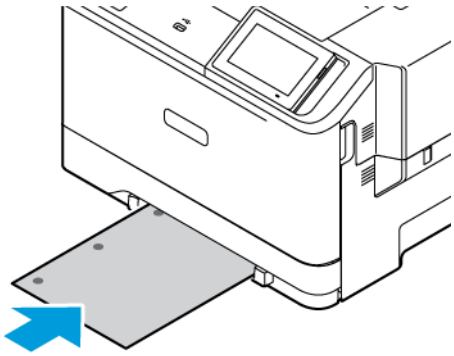

Load the paper in the tray with the hole punch on the left side of the tray.

3. Feed the paper until its leading edge gets pulled in.

Warning: To avoid paper jams, do not force paper into the manual feeder.

LOADING THE MULTIPURPOSE FEEDER

1. Open the multipurpose feeder.

Note: The multipurpose feeder is available only if the optional 550+100-sheet tray is installed.

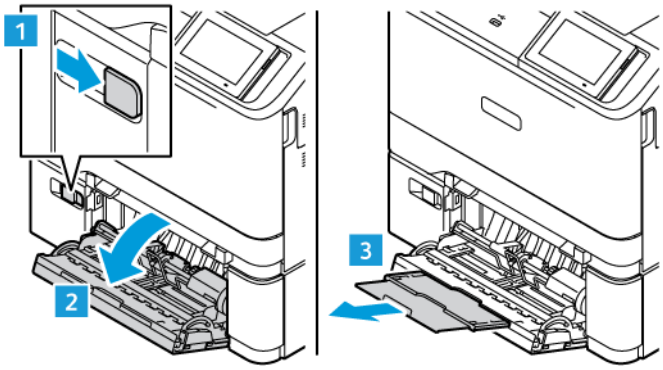

2. Adjust the guide to match the size of the paper that you are loading.

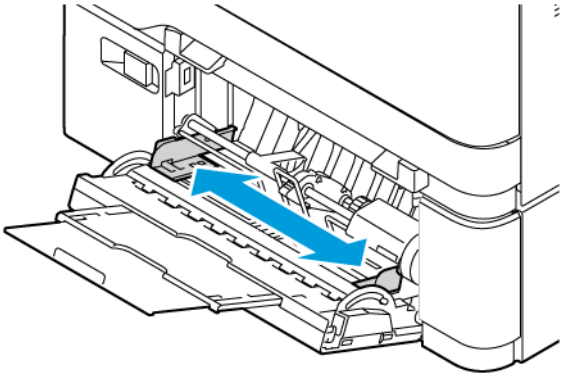

3. Flex, fan, and align the paper edges before loading.

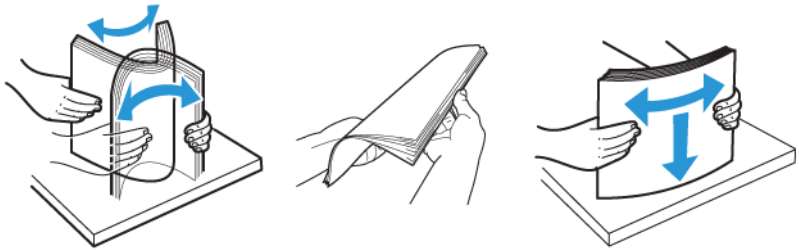

4. Load the paper.
   - Load letterhead with the printable side face down and the top edge entering the printer first for one-sided printing

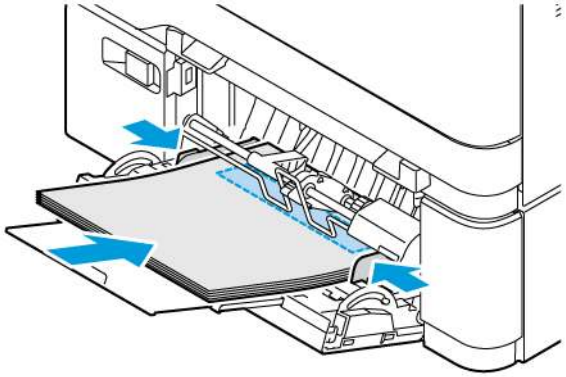

   - Load letterhead with the printable side face up and the top edge entering the printer last for two-sided printing

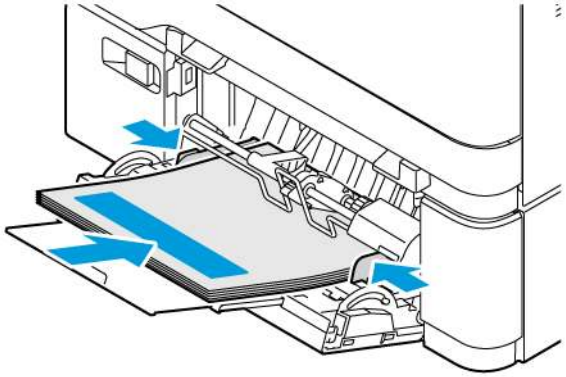

   - Load envelopes with the flap side up and against the right side of the paper guide

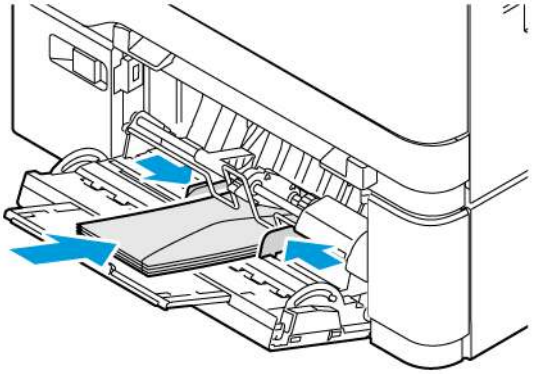

CAUTION—TIPPING HAZARD: Do not use envelopes with stamps, clasps, snaps, windows, coated linings, or self-stick adhesives.

   - Load the paper in the tray with the hole punch on the left side of the tray.

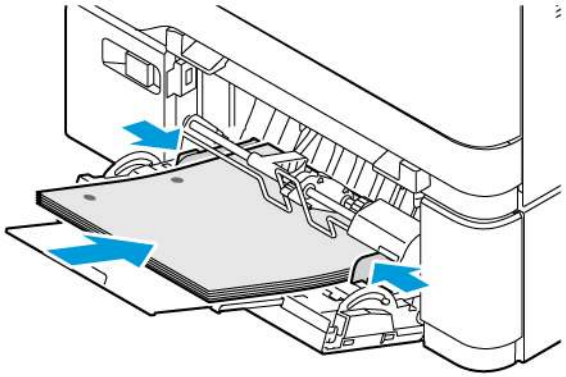

- Load the labels face up in the tray, then adjust the length and width of the paper guides to fit the labels.

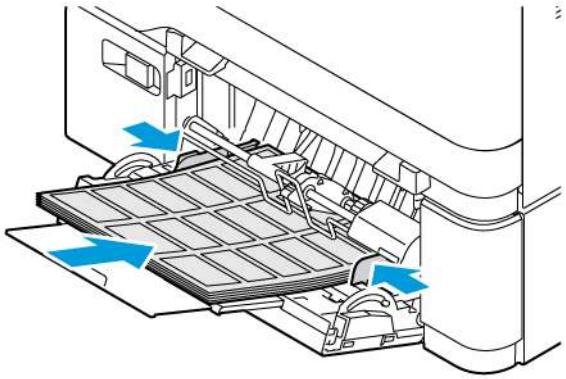

5. From the Paper menu in the control panel, set the paper size and paper type to match the paper loaded in the multipurpose feeder.

LINKING TRAYS

1. From the home screen, touch **Settings > Paper > Tray Configuration** select a paper source.
2. Set the same paper size and paper type for the trays that you are linking.
3. From the home screen, touch **Settings > Device > Maintenance > Configuration Menu > Tray Configuration > Tray Linking**.
4. Touch **Automatic**.

To unlink trays, make sure that no trays have the same paper size and paper type settings.

> **Warning:** The temperature of the fuser varies according to the specified paper type. To avoid printing issues, match the paper type setting in the printer with the paper loaded in the tray.

Installing and Updating Software, Drivers, and Firmware

INSTALLING THE PRINTER SOFTWARE

Note: The print driver is included in the software installer package.

Note: For Macintosh computers with mac OS version 10.7 or later, you do not need to install the driver to print on an AirPrint-certified printer. If you want custom printing features, then download the print driver.

1. Obtain a copy of the software installer package.
   - From the software CD that came with your printer.
   - Go to www.xerox.com.
2. Run the installer, and then follow the instructions on the computer screen.

ADDING PRINTERS TO A COMPUTER

Before you begin, do one of the following:

- Connect the printer and the computer to the same network. For more information on connecting the printer to a network, refer to Connecting the Printer to a Wi-Fi Network
- Connect the computer to the printer. For more information, refer to Connecting a Computer to the Printer.
- Connect the printer to the computer using a USB cable. For more information, refer to Attaching Cables.

Note: The USB cable is sold separately.

For Windows users

1. From a computer, install the print driver.
   For more information, refer to Installing the Printer Software.
2. Open the printers folder, and then click **Add a printer or scanner**.

3. Depending on your printer connection, do one of the following:
   - Select a printer from the list, and then click **Add device**.
   - Click **Show Wi-Fi Direct printers**, select a printer, and then click **Add device**.
   - Click **The printer that I want isn't listed**, and then from the Add Printer window, do the following:
   - Select **Add a printer using a TCP/IP address or hostname**, and then click **Next**.
   - In the "Hostname or IP address" field, type the printer IP address, and then click **Next**.
   - View the printer IP address on the printer home screen. The IP address appears as four sets of numbers separated by periods, such as 123.123.123.123.
   - If you are using a proxy server, then temporarily disable it to load the web page correctly.
   - Select a print driver, and then click **Next**.
   - Select **Use the print driver that is currently installed (recommended)**, and then click **Next**.
   - Type a printer name, and then click **Next**.
   - Select a printer sharing option, and then click **Next**.
   - Click **Finish**.

For Macintosh Users

1. From a computer, open **Printers & Scanners**.
2. Click **+**, and then select a printer.
3. From the Use menu, select a print driver.
   To use the Macintosh print driver, select either **AirPrint** or **Secure AirPrint**.
   If you want custom printing features, then select the print driver. To install the driver, refer to Installing the Printer Software.
4. Add the printer.

UPDATING FIRMWARE

To enhance printer performance and fix issues, update the printer firmware regularly.

For more information on updating the firmware, contact your customer service representative.

1. Open a web browser, then type the printer IP address in the address field.
   - View the printer IP address on the printer home screen. The IP address appears as four sets of numbers separated by periods, such as 123.123.123.123.
   - If you are using a proxy server, then temporarily disable it to load the web page correctly.
2. Click **Settings > Device > Software Update**.

3. Choose one of the following:
   - Click **Check Now > I agree, start update**.
   - To upload the flash file, perform the following steps:
   1. Browse to the flash file.

Note: Make sure that you have extracted the software.zip file.

   2. Click **Upload > Start**.

EXPORTING OR IMPORTING A CONFIGURATION FILE

You can export the configuration settings of your printer into a text file, and then import the file to apply the settings to other printers.

1. Open a Web browser, then type the printer IP address in the address field.
   - View the printer IP address on the printer home screen. The IP address appears as four sets of numbers separated by periods, such as 123.123.123.123.
   - If you are using a proxy server, temporarily disable it to load the Web page correctly.
2. From the Embedded Web Server, click **Export Configuration** or **Import Configuration**.
3. Follow the instructions on the screen.
4. If the printer supports applications, then do the following:
   a. Click **Apps**, select the application, then click **Configure**.
   b. Click **Export** or **Import**.

ADDING AVAILABLE OPTIONS IN THE PRINT DRIVER

For Windows Users

1. Open the printers folder.
2. Select the printer you want to update, and then do either of the following:
   - For Windows 7 or later, select **Manage**, **Printer properties**, select either **Device setting** tab or **Configuration** tab depending on the type of print driver.
   - Review or change options.
3. Select **OK** to accept the options.

For Macintosh Users

1. From System Preferences in the Apple menu, navigate to your printer, and then select **Options & Supplies**.
2. Navigate to the list of hardware options, and then add any installed options.
3. Apply the changes.

Installing Hardware Options

Available internal options:

- Productivity Kit, that includes 500GB Hard Disk Drive (HDD)
- Optional Wireless Network Adapter
  - 802.11a/b/g/n/ac

Installing Optional Trays

Caution: To avoid the risk of electrical shock, if you are accessing the controller board or installing optional hardware or memory devices sometime after setting up the printer, then turn the printer off, and unplug the power cord from the electrical outlet before continuing. If you have any other devices attached to the printer, then turn them off as well, and unplug any cables going into the printer.

1. Turn off the printer.
2. Unplug the power cord from the electrical outlet, and then from the printer.
3. Unpack the optional tray, and then remove all packing material.
4. Align the printer with the optional tray, and then lower the printer into place.

CAUTION—POTENTIAL INJURY: If the printer weight is greater than 20kg (44lb), then it may require two or more people to lift it safely.

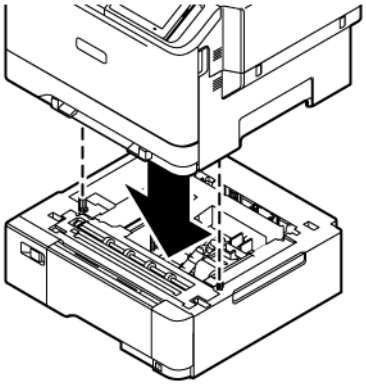

Note: If you are installing any optional 550–Sheet Trays, place them below the Optional 550+100-Sheet Tray.

5. Connect the power cord to the printer, and then to the electrical outlet.

CAUTION—POTENTIAL INJURY: To avoid the risk of fire or electrical shock, connect the power cord to an appropriately rated and properly grounded electrical outlet that is near the product and easily accessible.

6. Turn on the printer.
   Add the tray in the print driver to make it available for print jobs. For more information, refer to Adding Available Options in the Print Driver.

Networking

CONNECTING THE PRINTER TO A WI-FI NETWORK

Make sure that, Active Adapter is set to Auto. From the home screen, touch **Settings > Network/Ports > Network Overview > Active Adapter**.

Using the wireless setup wizard in the printer

Before using the wizard, make sure that the printer firmware is updated. For more information, see Updating Firmware.

1. From the home screen, touch > **Set up now**.
2. Select a Wi-Fi network, and then type the network password.
3. Touch **Done**.

Using the Settings Menu in the Printer

1. From the home screen, touch **Settings > Network/Ports > Wireless > Setup On Printer Panel > Choose Network**.
2. Select a Wi-Fi network, then type the network password.

Note: For Wi-Fi-network-ready printer models, a prompt to set up the Wi-Fi network appears during initial setup.

CONNECTING THE PRINTER TO A WIRELESS NETWORK USING WI-FI PROTECTED SETUP (WPS)

Before you begin, make sure that:

- The access point (wireless router) is WPS-certified or WPS-compatible. For more information, see the documentation that came with your access point.
- A wireless network adapter is installed in your printer. For more information, see the instructions that came with the adapter.
- Active Adapter is set to Auto. From the home screen, touch **Settings > Network/Ports > Network Overview > Active Adapter**.

Using the Push Button method

1. From the home screen, touch **Settings > Network/Ports > Wireless > Wi-Fi Protected Setup > Start Push Button Method**.
2. Follow the instructions on the display.

Using the personal identification number (PIN) method

1. From the home screen, touch **Settings > Network/Ports > Wireless > Wi-Fi Protected Setup > Start PIN Method**.

2. Copy the eight-digit WPS PIN.
3. Open a web browser, and then type the IP address of your access point in the address field.
   - To know the IP address, see the documentation that came with your access point.
   - If you are using a proxy server, then temporarily disable it to load the web page correctly.
4. Access the WPS settings. For more information, see the documentation that came with your access point.
5. Enter the eight-digit PIN, and then save the changes.

CONFIGURING WI–FI DIRECT

Wi-Fi Direct is a Wi-Fi-based peer-to-peer technology that allows wireless devices to connect directly to a Wi-Fi Direct-enabled printer without using an access point (wireless router).

1. From the home screen, touch **Settings > Network/Ports > Wi-Fi Direct**.
2. Configure the settings.
   - Enable Wi-Fi Direct: Enables the printer to broadcast its own Wi-Fi Direct network.
   - Wi-Fi Direct Name: Assigns a name for the Wi-Fi Direct network.
   - Wi-Fi Direct Password: Assigns the password for negotiating the wireless security when using the peer-to-peer connection.
   - Show Password on Setup Page: Shows the password on the Network Setup Page.
   - Auto-Accept Push Button Requests: Lets the printer accept connection requests automatically.

Note: Accepting push-button requests automatically is not secured.

- By default, the Wi-Fi Direct network password is not visible on the printer display. To show the password, enable the password peek icon. From the control panel, navigate to **Settings > Security > Miscellaneous > Enable Password/PIN Reveal**.
- To know the password of the Wi-Fi Direct network without showing it on the printer display, from the control panel navigate to **Settings > Reports > Network > Network Setup Page**.

CONNECTING A MOBILE DEVICE TO THE PRINTER

Before connecting your mobile device, make sure that Wi-Fi Direct has been configured. For more information, refer to Configuring Wi–Fi Direct.

Connecting Using Wi–Fi Direct for Android Mobile Devices

Note: These instructions apply only to Android mobile devices.

1. From the mobile device, go to the settings menu.
2. Enable **Wi-Fi**, and then tap **Wi-Fi Direct**.
3. Select the printer Wi-Fi Direct name.
4. Confirm the connection on the printer control panel.

Connecting Using Wi–Fi Direct for iOS Mobile Devices

Note: These instructions apply only to iOS mobile devices.

1. From the mobile device, go to the settings menu.
2. Click the wireless icon, and then select the printer Wi-Fi Direct name.
   The string DIRECT-xy, where x and y are two random characters is added before the Wi-Fi Direct name.
3. Type the Wi-Fi Direct password.

Switch your mobile device back to its previous network after disconnecting from the Wi-Fi Direct network.

Connecting Using Wi-Fi

1. From the mobile device, go to the settings menu.
2. Tap **Wi-Fi**, and then select the printer Wi-Fi Direct name.

   Note: The string DIRECT-xy (where x and y are two random characters) is added before the Wi-Fi Direct name.
3. Enter the Wi-Fi Direct password.

CONNECTING A COMPUTER TO THE PRINTER

Before connecting your computer, make sure that Wi-Fi Direct has been configured. For more information, refer to Configuring Wi–Fi Direct.

For Windows Users

1. Open the printers folder and then click **Add a printer or scanner**.
2. Click **Show Wi-Fi Direct printers**, and then select the printer Wi-Fi Direct name.
3. From the printer display, take note of the eight-digit PIN of the printer.
4. Enter the PIN on the computer.
   If the print driver is not already installed, then Windows downloads the appropriate driver.

For Macintosh Users

1. Click the wireless icon, and then select the printer Wi-Fi Direct name.
   The string DIRECT-xy (where x and y are two random characters) is added before the Wi-Fi Direct name.
2. Type the Wi-Fi Direct password.
   Switch your computer back to its previous network after disconnecting from the Wi-Fi Direct network.

DEACTIVATING THE WI-FI NETWORK

1. From the home screen, touch **Settings > Network/Ports > Network Overview > Active Adapter > Standard Network**.
2. Follow the instructions on the display.

CHECKING THE PRINTER CONNECTIVITY

1. From the home screen, touch **Settings > Reports > Network > Network Setup Page**.
2. Check the first section of the page and confirm that the status is connected.

   If the status is not connected, then the LAN drop may be inactive or the network cable may be unplugged or malfunctioning. Contact your administrator for assistance.

Secure the Printer

This chapter contains:

Locating the Security Slot 80
Erasing Printer Memory 81
Erasing Printer Storage Drive 82
Restoring Factory Default Settings 83

Locating the Security Slot

The printer is equipped with a security lock feature. Attach a security lock compatible with most laptop computers in the location shown to secure the printer in place.

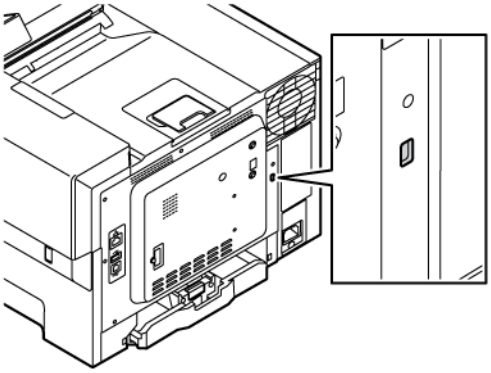

Erasing Printer Memory

To erase volatile memory or buffered data in your printer, turn off the printer.

To erase non-volatile memory or individual settings, device and network settings, security settings, and embedded solutions, do the following:

1. From the home screen, touch **Settings > Device > Maintenance > Erase Printer Memory**.
2. Touch the **Sanitize all information on nonvolatile memory** check box, and then touch **Erase**.
3. Touch **Start initial setup wizard** or **Leave printer offline**, and then touch **Next**.
4. Start the Operation.

Note: This process also destroys the encryption key that is used to protect user data. Destroying the encryption key makes the data irrecoverable.

Erasing Printer Storage Drive

Note: This application is supported only in printers with the optional Productivity Kit.

1. From the home screen, touch **Settings > Device > Maintenance > Erase Hard Disk**.
2. For hard disk, touch the **Sanitize all information on hard disk** check box, touch **ERASE**, and then select a method to erase data.

   Note: The process to sanitize the hard disk can take from several minutes to more than an hour, making the printer unavailable for other tasks.
3. Start the operation.

Restoring Factory Default Settings

1. From the home screen, touch **Settings > Device > Restore Factory Defaults**.
2. Touch **Restore Setting**, select the settings that you want to restore.
3. Touch **Restore**.
4. Start the operation.

Print

This chapter contains:

Printing from a Computer 86
Printing From a Mobile Device 87
Printing from a Flash Drive 88
Supported Flash Drives and File Types 89
Configuring Confidential Jobs (Secure Print) 90
Printing Confidential and Other Held Jobs 91
Printing a Font Sample List 92
Printing a Directory List 93
Placing Separator Sheets Between Copies 94
Canceling a Print Job 95
Adjusting Toner Darkness 96

Printing from a Computer

Note: For labels, card stock, and envelopes, set the paper size and type in the printer before printing the document.

1. From the document that you are trying to print, open the Print dialog.
2. If necessary, adjust the settings.
3. Print the document.

Printing From a Mobile Device

To print from a smartphone using Xerox® Easy Assist App, refer to Xerox® Easy Assist App.

PRINTING FROM A MOBILE DEVICE USING MOPRIA™ PRINT SERVICE

Mopria Print Service is a mobile printing solution for mobile devices running on Android™ version 5.0 or later. It allows you to print directly to any Mopria-certified printer.

Note: Make sure that you download the Mopria Print Service application from the Google Play Store and enable it in the mobile device.

1. From your Android mobile device, launch a compatible application or select a document from your file manager.
2. Tap **More Options**, then **Print**.
3. Select a printer, then adjust the settings, if necessary.
4. Tap **Print**.

PRINTING FROM A MOBILE DEVICE USING AIRPRINT®

The AirPrint software feature is a mobile printing solution that allows you to print directly from Apple devices to an AirPrint-certified printer.

Note:

- Make sure that the Apple device and the printer are connected to the same network. If the network has multiple wireless hubs, then make sure that both devices are connected to the same subnet.
- This application is supported only in some Apple devices.

1. From your mobile device, select a document from your file manager or launch a compatible application.
2. Tap **Share**, then **Print**.
3. Select a printer, then adjust the settings, if necessary.
4. Print the document.

PRINTING FROM A MOBILE DEVICE USING WI-FI DIRECT®

Wi-Fi Direct is a printing service that lets you print to any Wi-Fi Direct-ready printer.

Note: Make sure that the mobile device is connected to the printer through Wi-Fi Direct. For more information, see Connecting a Mobile Device to the Printer.

1. From your mobile device, launch a compatible application or select a document from your file manager.
2. Tap **More Options**, then **Print**.
3. Select a printer, then adjust the settings, if necessary.
4. Print the document.

Printing from a Flash Drive

1. Insert the flash drive.

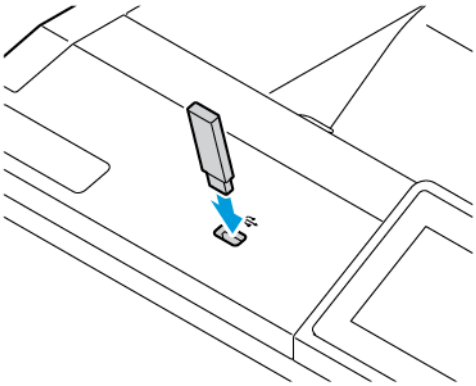

Note:

- If you insert the flash drive when an error message appears, then the printer ignores the flash drive.
- If you insert the flash drive while the printer is processing other print jobs, then Busy appears on the display.

2. From the display, touch the document that you want to print.

   If necessary, configure other print settings.

3. Print the document.

   To print another document, touch **USB Drive**.

Warning: To avoid loss of data or printer malfunction, do not touch the flash drive or the printer in the area shown while actively printing, reading, or writing from the memory device.

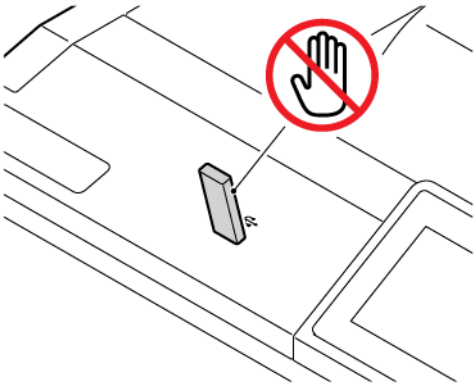

Supported Flash Drives and File Types

FLASH DRIVES

- Lexar JumpDrive S70 (16GB and 32GB)
- SanDisk Cruzer Micro (16GB and 32GB)
- PNY Attache (16GB and 32GB)

Note:

- The printer supports high-speed flash drives with full-speed standard.
- Flash drives must support the File Allocation Table (FAT) system.

FILE TYPES

DOCUMENTS	IMAGES
• PDF (version 1.7 or earlier) • Microsoft file formats (DOC, DOCX, XLS, XLSX, PPT, PPTX)	• JPEG or JPG • TIFF or TIF • GIF • BMP • PNG • PCX • DCX

Configuring Confidential Jobs (Secure Print)

1. From the home screen, touch **Settings > Security > Confidential Print Setup**.
2. Configure the settings.

SETTING	DESCRIPTION
Max Invalid PIN	Set the limit for entering an invalid PIN. Note: When the limit is reached, the print jobs for that user name are deleted.
Confidential Job Expiration	Set an individual expiration time for each held job before it is automatically deleted from the printer memory, hard disk. Note: A held job is either Confidential, Repeat, Reserve, or Verify.
Repeat Job Expiration	Set the expiration time for print jobs that you want to repeat.
Verify Job Expiration	Set the expiration time for printing a copy of a job for you to check its quality before printing the remaining copies.
Reserve Job Expiration	Set the expiration time for jobs that you want to store in the printer for printing later.
Require All Jobs to be Held	Set the printer to hold all print jobs.
Keep duplicate documents	Set the printer to print all documents with the same file name.

Printing Confidential and Other Held Jobs

FOR WINDOWS USERS

Using the print driver, do the following:

1. With a document open, click **File > Print**.
2. Select the printer, then click **Printer Properties > Printing Options > Job Type**.
3. Select the Print job type (Secure Print, Sample Set, Saved Job).

   If you select **Secure Print**, enter a Passcode, then click **OK**. The **Printing Options**window close.
4. Click **Print**.
5. From the printer home screen, release the print job.
   - For secure print jobs, touch **Held jobs**, select your user name, **Confidential**, enter the PIN, select the print job, configure the settings and **Print**.
   - For other print jobs, touch **Held jobs**, select your user name, select the print job, configure the settings and **Print**.

FOR MACINTOSH USERS

Using AirPrint

1. With a document open, choose **File > Print**.
2. Select a printer, then from the drop-down menu following the Orientation menu, choose **PIN Printing**.
3. Enable **Print with PIN**, then enter a four-digit PIN.
4. Click **Print**.
5. From the printer home screen, release the print job. Touch **Held jobs > select your computer name > Confidential > enter the PIN > select the print job > Print**.

Using the Print Driver

1. With a document open, choose **File > Print**.
2. Select a printer, then from the drop-down menu following the Orientation menu, choose **Print and Hold**.
3. Choose **Confidential Print**, then enter a four-digit PIN.
4. Click **Print**.
5. From the printer home screen, release the print job. Touch **Held jobs > select your computer name > Confidential > enter the PIN > select the print job > Print**.

Printing a Font Sample List

1. From the home screen, touch **Settings > Reports > Print > Print Fonts**.
2. Touch **PCL Fonts** or **PS Fonts**.

Printing a Directory List

From the home screen, touch **Settings > Reports > Print > Print Directory**.

Placing Separator Sheets Between Copies

1. From the home screen, touch **Settings > Print > Layout > Separator Sheets > Between Copies**.
2. Print the document.

Canceling a Print Job

1. From the home screen, touch **Cancel**.
2. Select the job to cancel.

Note: You can also cancel a job by touching **Job Queue**.

Adjusting Toner Darkness

1. From the home screen, touch **Settings > Print > Quality > Toner Darkness**.
2. Select a setting.

Use Printer Menus

This chapter contains:

Menu Map 98
Device 99
Print 112
Paper 122
USB Drive 124
Network/Ports 126
Security 145
Reports 157
Supplies Plan 159
Troubleshooting 160
Printing the Menu Settings Page 161

Menu Map

Device	• Preferences • Eco-Mode • Remote Operator Panel • Notifications • Power Management • Anonymous Data Collection	• Accessibility • Restore Factory Defaults • Maintenance • Home Screen Customization • About this Printer
Print	• Layout • Setup • Quality • Job Accounting	• PDF • PostScript • PCL • Image
Paper	• Tray Configuration	• Media Configuration
USB Drive	Flash Drive Print	
Network/Ports	• Network Overview • Wireless • Wi-Fi Direct • AirPrint • Mobile Services Management • Ethernet • TCP/IP • SNMP • IPSec • 802.1x	• LPD Configuration • HTTP/FTP Settings • ThinPrint • USB • Restrict External Network Access • Universal Print
Security	• Login Methods • Certificate Management • Schedule USB Devices • Security Audit Log • Login Restrictions • Confidential Print Setup	• Disk Encryption • Erase Temporary Data Files • Solutions LDAP Settings • Miscellaneous
Reports	• Menu Settings Page • Device	• Print • Network
Supplies Plan	• Plan Activation • Plan Conversion	• Subscription Service
Troubleshooting	Print Quality Test Pages	

Device

Important: Some features are system administrator functions and the options are hidden from view. For more information, refer to *Embedded Web Server Administrator Guide* at www.xerox.com/office/C410docs.

PREFERENCES

MENU ITEM	DESCRIPTION
Display Language [List of languages]	Set the language of the text that appears on the display.
Country/Region [List of countries or regions]	Identify the country or region where the printer is configured to operate.
Run initial setup • Off* • On	Run the setup wizard.
Keyboard Keyboard Type [List of languages]	Select a language as a keyboard type. Note: All the Keyboard Type values may not appear or may require special hardware to appear.
Displayed information • Display Text 1 (IP Address*) • Display Text 2 (Date/Time*) • Custom Text 1 • Custom Text 2	Specify the information to appear on the home screen.
Date and Time • Configure – Current Date and Time – Manually Set Date and Time – Date Format (MM-DD-YYYY*) – Time Format (12 hour A.M./P.M.*) – Time Zone – UTC (GMT) Offset – DST Start – DST End – DST Offset • Network Time Protocol	Configure the printer date and time and network time protocol. Note: • MM-DD-YYYY is the U.S. factory default setting. DD-MM-YYYY is the international factory default setting. • UTC (GMT) Offset, DST Start, DST End, and DST Offset appear only when Time Zone is set to (UTC+user) Custom. • Key ID and Password appear only when Enable Authentication is set to MD5 key.

MENU ITEM	DESCRIPTION
– Enable NTP (On*) – NTP Server – Enable Authentication (None*) – Key ID – Password	
Paper Sizes • U.S.* • Metric	Specify the unit of measurement for paper sizes. Note: The country or region selected in the initial setup wizard determines the initial paper size setting.
Screen Brightness 20–100 % (100*)	Adjust the brightness of the display.
Flash Drive Access • Disabled • Enabled*	Enable access to the flash drive.
Screen Timeout 5–300 (60*)	Set the idle time in seconds before the display shows the home screen, or before the printer logs out a user account automatically.
Note: An asterisk (*) next to a value indicates the factory default setting.	

ECO-MODE

MENU ITEM	DESCRIPTION
Print • Sides (1-Sided*) • Pages per Side (Off*) • Toner Darkness (4*) • Color Saver (Off*)	Configure the print settings of the printer.
Note: An asterisk (*) next to a value indicates the factory default setting.	

REMOTE OPERATOR PANEL

MENU ITEM	DESCRIPTION
External VNC Connection • Don't Allow* • Allow	Connect an external Virtual Network Computing (VNC) client to the remote control panel.
Authentication Type • None* • Standard Authentication	Set the authentication type when accessing the VNC client server.
VNC Password	Specify the password to connect to the VNC client server. Note: This menu item appears only if Authentication Type is set to Standard Authentication.
Note: An asterisk (*) next to a value indicates the factory default setting.	

NOTIFICATIONS

MENU ITEM	DESCRIPTION
Supplies • Show Supply Estimates – Show estimates* – Do not show estimates • Custom Supply Notifications	Show the estimated status of the supplies.
E-mail Alerts Setup • E-mail Setup – Primary SMTP Gateway – Primary SMTP Gateway Port (25*) – Secondary SMTP Gateway – Secondary SMTP Gateway Port (25*) – SMTP Timeout (30 seconds*) – Reply Address – Always use SMTP default Reply Address (Off*) – Use SSL/TLS(Disabled*) – Require Trusted Certificate (On*) – SMTP Server Authentication (No authentication required*)	Configure the e-mail settings of the printer.

MENU ITEM	DESCRIPTION
– Device-Initiated E-mail (None*) – User-Initiated E-mail (None*) – Use Active Directory Device Credentials (Off*) – Device Userid – Device Password – Kerberos 5 REALM – NTLM Domain – Disable "SMTP server not set up" error (Off*)	
Error Prevention • Jam Assist – Off – On*	Set the printer to check for jammed paper automatically.
Error Prevention • Auto Continue – Off – On* (5 seconds)	Let the printer continue processing or printing a job automatically after clearing certain attendance conditions.
Error Prevention • Auto Reboot – Auto Reboot (Reboot always*)	Set the printer to restart when an error occurs.
Error Prevention • Auto Reboot – Max Auto Reboots(20*)	Set the number of automatic reboots that the printer can perform.
Error Prevention • Auto Reboot – Auto Reboot Window (720*)	Set the number of seconds before the printer performs an automatic reboot.
Error Prevention • Auto Reboot – Auto Reboot Counter	Show a read-only information of the reboot counter.
Error Prevention • Auto Reboot – Reset Auto Reboot Counter	Reset the counter for auto reboot.
Error Prevention • Display Short Paper Error	Set the printer to show a message when a short paper error occurs.

MENU ITEM	DESCRIPTION
– On – Auto-clear*	Note: Short paper refers to the size of the paper loaded.
Error Prevention • Page Protect – Off* – On	Set the printer to process the entire page into the memory before printing it.
Jam Content Recovery • Jam Recovery – Auto* – Off – On	Set the printer to reprint jammed pages.
Note: An asterisk (*) next to a value indicates the factory default setting.	

POWER MANAGEMENT

MENU ITEM	DESCRIPTION
Sleep Mode Profile • Print from Sleep Mode – Stay awake after printing – Enter Sleep Mode after printing*	Set the printer to stay awake or enter Sleep mode after printing.
Sleep Mode Profile • Touch to Wake from Deep Sleep – Off – On*	Wake the printer from Deep Sleep mode by touching the printer display.
Timeouts Sleep Mode 1–114 minutes (15*)	Set the idle time before the printer begins operating in Sleep mode.
Timeouts • Hibernate Timeout – Disabled – 1 hour – 2 hours – 3 hours	Set the time before the printer turns off.

MENU ITEM	DESCRIPTION
– 6 hours – 1 day – 2 days – 3 days* – 1 week – 2 weeks – 1 month	
Timeouts • Hibernate Timeout on Connection – Hibernate – Do Not Hibernate*	Set Hibernate Timeout to turn off the printer while an active Ethernet connection exists.
Schedule Power Modes • Schedules – Add New Schedule	Schedule the printer when to enter Sleep or Hibernate mode.
Note: An asterisk (*) next to a value indicates the factory default setting.	

ANONYMOUS DATA COLLECTION

MENU ITEM	DESCRIPTION
Anonymous Data Collection • Device Usage and Performance • Information • None*	Send printer usage and performance information to Xerox. Note: Anonymous Data Send Time appears only when you set Anonymous Data Collection to Device Usage and Performance Information.
Anonymous Data Send Time • Start Time • Stop Time	
Note: An asterisk (*) next to a value indicates the factory default setting.	

ACCESSIBILITY

MENU ITEM	DESCRIPTION
Duplicate Key Strike Interval 0–5 seconds (0*)	Set the interval during which the printer ignores duplicate key presses on an attached keyboard.
Key Repeat Initial Delay 0.25–5 seconds (1*)	Set the initial length of delay before a repeating key starts repeating. Note: Appears only when a keyboard is attached to the printer.
Key Repeat Rate 0.5–30 (30*)	Set the number of presses per second for a repeating key. Note: Appears only when a keyboard is attached to the printer.
Prolong Screen Timeout • Off* • On	Let the user remain in the same location and reset the Screen Timeout timer when it expires instead of returning to the home screen.
Note: An asterisk (*) next to a value indicates the factory default setting.	

RESTORE FACTORY DEFAULTS

MENU ITEM	DESCRIPTION
Restore Settings • Restore all settings – Restore printer settings – Restore network settings – Restore app settings	Restore the printer factory default settings.

MAINTENANCE

Configuration Menu

MENU ITEM	DESCRIPTION
USB Configuration • USB PnP – 1* – 2	Change the USB driver mode of the printer to improve its compatibility with a personal computer.
USB Configuration • USB Speed – Full – Auto*	Set the USB port to run at full speed and disable its high-speed capabilities.
Tray Configuration • Size Sensing – Tray [x] Sensing (On*)	Set the tray to sense automatically the paper size loaded into it.
Tray Configuration • Tray Linking – Automatic* – Off	Set the printer to link the trays that have the same paper type and paper size settings.
Tray Configuration • Show Tray Insert Message – Off – Only for unknown sizes* – Always	Display a message that lets the user change the paper size and paper type settings after inserting the tray.
Tray Configuration • Paper Prompts – Auto* – Multi purpose feeder – Manual Paper	Set the paper source that the user fills when a prompt to load paper appears. Note: For Multipurpose Feeder to appear, in the Paper menu, set Configure MP to Cassette.
Tray Configuration • Envelope Prompts – Auto* – Multipurpose Feeder – Manual Envelope	Set the paper source that the user fills when a prompt to load envelope appears. Note: For Multipurpose Feeder to appear, in the Paper menu, set Configure MP to Cassette.

MENU ITEM	DESCRIPTION
Tray Configuration • Action for Prompts – Prompt user* – Continue – Use current	Set the printer to resolve paper- or envelope-related change prompts.
Reports • Menu Settings Page • Event Log • Event Log Summary • HealthCheck Statistics	Print reports about printer menu settings, status, and event logs.
Supply Usage And Counters Clear Supply Usage History	Reset the supply usage history to the factory default level.
Supply Usage And Counters • Reset Black Cartridge Counter • Reset Cyan Cartridge Counter • Reset Magenta Cartridge Counter • Reset Yellow Cartridge Counter	Reset the counter after installing a new cartridge.
Supply Usage And Counters Reset Black Imaging Unit Counter	Reset the counter after installing a new black imaging unit.
Supply Usage And Counters Reset Color Imaging Kit Counter	Reset the counter after installing a new color imaging kit.
Supply Usage And Counters Reset Maintenance Counter	Reset the counter after installing a new fuser.
Supply Usage And Counters Tiered Coverage Ranges	Adjust the amount of color coverage for each printing range.
Printer Emulations • PPDS Emulation – Off* – On	Set the printer to recognize and use the PPDS data stream.
Printer Emulations • PS Emulation – Off – On*	Set the printer to recognize and use the PS data stream.
Printer Emulations	Activate Formsmerge to store the forms into the hard

MENU ITEM	DESCRIPTION
• Enable Formsmerge – Off* – On	disk..
Printer Emulations • Enable Prescribe – Off* – On	Enable Prescribe emulation.
Printer Emulations • Emulator Security – Page Timeout (60 minutes) – Reset Emulator After Job (Off*) – Disable Printer Message Access (On*)	Configure the security settings of the printer during emulation
Print Configuration • Black Only Mode – Off* – On	Reset the emulator after a print job.
Print Configuration • Color Trapping – Off – 1 – 2* – 3 – 4 – 5	Enhance the printed output to compensate for misregistration in the printer.
Print Configuration Font Sharpening 0–150 (24*)	Set a text point-size value below which the high-frequency screens are used when printing font data. For example, if the value is 24, then all fonts sized 24 points or less use the high-frequency screens.
Device Operations • Quiet Mode – Off* – On	Set the printer to operate in Quiet Mode. Note: Enabling this setting slows down the printer performance.
Device Operations • Panel Menus	Enable access to the control panel menus.

MENU ITEM	DESCRIPTION
– Off* – On	
Device Operations • Safe Mode – Off* – On	Set the printer to operate in a special mode, in which it attempts to continue offering as much functionality as possible, despite known issues. For example, when set to On, and the duplex motor is nonfunctional, the printer performs one-sided printing of the documents even if the job is two-sided printing.
Device Operations Clear Custom Status	Erase user-defined strings for the Default or Alternate custom messages.
Device Operations Clear all remotely-installed messages	Erase messages that were remotely installed.
Device Operations • Automatically Display Error Screens – Off – On*	Show existing error messages on the display after the printer remains inactive on the home screen for a length of time.
App Configuration • XES Applications – Off – On*	Enable Xerox Embedded Solutions (XES) applications.
Note: An asterisk (*) next to a value indicates the factory default setting.	

Out of Service Erase

MENU ITEM	DESCRIPTION
Erase Printer Memory • Sanitize all information on nonvolatile memory – Erase all printer and network settings – Erase all apps and app settings	Clear all settings and applications that are stored in the printer.
Erase Hard Disk • Sanitize all information on hard disk – Erase downloads (Erases all macros, fonts, PFOs, etc.) – Erase buffered jobs – Erase Held Jobs – Reserve, Repeat, and Verify jobs – Confidential jobs – Non-restored jobs – All held jobs	Clear all information on nonvolatile memory and on the storage drive. Note: Sanitize all information on hard disk and Erase appear only when a storage drive is installed.

HOME SCREEN CUSTOMIZATION

Note: This menu appears only in the Embedded Web Server.

MENU ITEM	DESCRIPTION
Status/Supplies Job Queue Settings Address Book USB Drive Held Jobs	Specify which icons to show on the home screen.

ABOUT THIS PRINTER

MENU ITEM	DESCRIPTION
Xerox Asset Tag	Specify the identity of the printer. The maximum length is 32 characters.
Customer Asset Tag	Show the serial number of the printer. The maximum length is 32 characters.

MENU ITEM	DESCRIPTION
Printer's Location	Specify the printer location. The maximum length is 63 characters
Contact	Specify the contact information for the printer. The maximum length is 63 characters.

Print

Important: Some features are system administrator functions and the options are hidden from view. For more information, refer to *Embedded Web Server Administrator Guide* at www.xerox.com/office/C410docs.

LAYOUT

MENU ITEM	DESCRIPTION
Sides • 1-sided* • 2-sided	Specify whether to print on one side or two sides of the paper.
Flip Style • Long Edge* • Short Edge	Determine which side of the paper (long edge or short edge) is bound when performing two-sided printing.
Blank Pages • Print • Do Not Print*	Print blank pages that are included in a print job.
Collate • Off (1,1,1,2,2,2) • On (1,2,1,2,1,2)*	Keep the pages of a print job stacked in sequence, particularly when printing multiple copies of the job.
Separator Sheets • None* • Between Copies • Between Jobs • Between Pages	Insert blank separator sheets when printing.
Separator Sheet Source Tray [x] (1*)	Specify the paper source for the separator sheet.
Pages per Side • Off* • 2 pages per side • 3 pages per side • 4 pages per side • 6 pages per side • 9 pages per side • 12 pages per side • 16 pages per side	Print multiple page images on one side of a sheet of paper.
Pages per Side Ordering • Horizontal* • Reverse Horizontal • Vertical	Specify the positioning of multiple page images when using Pages per Side.

MENU ITEM	DESCRIPTION
• Reverse Vertical	
Pages per Side Orientation • Auto* • Landscape • Portrait	Specify the orientation of a multiple-page document when using Pages per Side.
Pages per Side Border • None* • Solid	Print a border around each page image when using Pages per Side.
Copies 1–9999 (1*)	Specify the number of copies for each print job.
Print Area • Normal* • Fit to Page • Whole Page	Set the printable area on a sheet of paper.
Note: An asterisk (*) next to a value indicates the factory default setting.	

SETUP

MENU ITEM	DESCRIPTION
Printer Language • PCL Emulation • PS Emulation*	Set the printer language. Note: Setting a printer language default does not prevent a software program from sending print jobs that use another printer language.
Job Waiting • Off* • On	Preserve print jobs requiring supplies so that jobs not requiring the missing supplies can print. Note: This menu item appears only when a hard disk is installed.
Job Hold Timeout 0–255 (30*)	Set the time in seconds that the printer waits for user intervention before it holds jobs that require unavailable resources. Note: This menu item appears only when a hard disk is installed.
Printer Usage • Max Speed • Max Yield*	Determine how the color print cartridges operate during printing.

MENU ITEM	DESCRIPTION
	Note: • When set to Max Yield, the color print cartridges slow down or stop while printing groups of black-only pages. • When set to Max Speed, the color print cartridges always run while printing, whether color or black pages are being printed.
Low-Speed Printer Usage • Max Speed • Max Yield	Determine how the color imaging kit operates during low-speed printing. Note: • When set to Max Yield, the color imaging kit slows or stops while printing groups of black-only pages. • When set to Max Speed, the color imaging kit always runs while printing, whether color or black pages are being printed. • This setting only changes printer behavior when the print engine is running at a 25 pages per minute process speed. It has no effect when the print engine is running at faster process speeds.
Download Target • RAM* • Disk	Specify where to save all permanent resources that have been downloaded to the printer. Note: This menu item appears only when a hard disk is installed.
Resource Save • Off* • On	Determine what the printer does with downloaded resources, such as fonts and macros, when it receives a job that requires more than the available memory. Note: • When set to Off, the printer retains downloaded resources only until memory is needed. Resources associated with the inactive printer language are deleted. • When set to On, the printer preserves all the permanent downloaded resources across all language switches. When necessary, the printer shows memory full messages instead of deleting permanent resources.

MENU ITEM	DESCRIPTION
Print All Order • Alphabetical* • Newest First • Oldest First	Specify the order in which held and confidential jobs are printed when Print All is selected. Note: This menu item appears only when a hard disk is installed.
Note: An asterisk (*) next to a value indicates the factory default setting.	

QUALITY

MENU ITEM	DESCRIPTION
Print Mode • Black and White • Color*	Set how the printer generates color content.
Print Resolution • 4800 CQ* • 1200 dpi	Set the resolution for the printed output. Note: 4800 CQ provides high-quality output at maximum speed.
Toner Darkness 1 to 5 (4*)	Determine the lightness or darkness of text images.
Halftone • Normal* • Detail	Enhance the printed output to have smoother lines with sharper edges.
Color Saver • Off* • On	Reduce the amount of toner used to print graphics and images.
RGB Brightness -6 to 6 (0*)	Adjust the brightness, contrast, and saturation for color output. Note: This setting does not affect files where CMYK color specifications are used.
RGB Contrast 6 to 6 (0*)	
RGB Saturation 0 to 5 (0*)	
Note: An asterisk (*) next to a value indicates the factory default setting.	

Advanced Imaging

MENU ITEM	DESCRIPTION
Color Balance • Cyan (0*) • Magenta (0*) • Yellow (0*) • Black (0*)	Adjust the amount of toner that is used for each color.
Color Balance Reset Defaults	Reset all color settings to their default values.
Color Correction • Off • Auto* • Manual	Modify the color settings used to print documents. • Off sets the printer to receive the color correction from the software. • Auto sets the printer to apply different color profiles to each object on the printed page. • Manual allows the customization of the RGB or CMYK color conversions applied to each object on the printed page. • Color Correction Content is available only when Color Correction is set to Manual.
Color Samples Print Color Samples	Print sample pages for each of the RGB and CMYK color conversion tables used in the printer.
Color Adjust	Calibrate the printer to adjust color variations in the printed output.
Spot Color Replacement Set Custom CMYK	Assign specific CMYK values to twenty named spot colors.
Note: An asterisk (*) next to a value indicates the factory default setting.	

JOB ACCOUNTING

MENU ITEM	DESCRIPTION
Job Accounting • Off* • On	Set the printer to create a log of the print jobs that it receives. Note: This menu item appears only when a flash memory, a hard disk is installed.
Accounting Log Frequency • Daily • Weekly	Specify how often the printer creates a log file.

MENU ITEM	DESCRIPTION
• Monthly*	
Log Action at End of Frequency • None* • E-mail Current Log • E-mail & Delete Current Log • Post Current Log • Post & Delete Current Log	Specify how the printer responds when the frequency threshold expires. Note: The value defined in Accounting Log Frequency determines when this action is triggered.
Log Action at Near Full • None* • E-mail Current Log • E-mail & Delete Current Log • E-mail & Delete Oldest Log • Post Current Log • Post & Delete Current Log • Post & Delete Oldest Log • Delete Current Log • Delete Oldest Log • Delete All But Current • Delete All Logs	Specify how the printer responds when the hard disk is nearly full.
Log Action at Full • None* • E-mail & Delete Current Log • E-mail & Delete Oldest Log • Post & Delete Current Log • Post & Delete Oldest Log • Delete Current Log • Delete Oldest Log • Delete All But Current • Delete All Logs	Specify how the printer responds when hard disk usage reaches the maximum limit (100MB).
URL to Post Log	Specify where the printer posts job accounting logs.
E-mail Address to Send Logs	Specify the e-mail address to which the printer sends job accounting logs.
Log File Prefix	Specify the prefix for the log files. Note: The current host name defined in the TCP/IP menu is used as the default log file prefix.
Note: An asterisk (*) next to a value indicates the factory default setting.	

PDF

MENU ITEM	DESCRIPTION
Scale To Fit • Off* • On	Scale the page content to fit the selected paper size.
Annotations • Print • Do Not Print*	Specify whether to print annotations in the PDF.
Print PDF Error • Off • On*	Enable the printing of PDF error.
Note: An asterisk (*) next to a value indicates the factory default setting.	

POSTSCRIPT

MENU ITEM	DESCRIPTION
Print PS Error • Off* • On	Print a page that describes the PostScript error. Note: When an error occurs, processing of the job stops, the printer prints an error message, and the rest of the print job is flushed.
Minimum Line Width 1–30 (2*)	Set the minimum stroke width. Note: Jobs printed in 1200 dpi use half the value directly.
Lock PS Startup Mode • Off* • On	Disable the SysStart file.
Image Smoothing • Off* • On	Enhance the contrast and sharpness of low-resolution images. Note: This setting has no effect on images with a resolution of 300 dpi or higher.
Font Priority • Resident* • Flash/Disk	Establish the font search order.

MENU ITEM	DESCRIPTION
	Note: • Resident sets the printer to search its memory for the requested font before searching the hard disk. • Flash/Disk sets the printer to search the hard disk for the requested font before searching the printer memory. • This menu item appears only when a hard disk is installed.
Wait Timeout • Off • On* (40 seconds)	Enable the printer to wait for more data before canceling a print job.
Note: An asterisk (*) next to a value indicates the factory default setting.	

PCL

MENU ITEM	DESCRIPTION
Font Name • Resident* • Disk • Download • Flash • All	Select the source which contains the default font selection. Note: • Disk and Flash appear only when a non-defective, non-protected hard disk that contains fonts is installed. • Download appears only if downloaded fonts exist in the printer memory.
Font Name [List of available fonts] (Courier*)	Select a font from the specified font source.
Symbol Set [List of available symbol set] (10U PC-8*)	Specify the symbol set for each font name. Note: A symbol set is a set of alphabetic and numeric characters, punctuation, and special symbols. Symbol sets support the different languages or specific programs such as math symbols for scientific text.
Pitch 0.08–100 (10*)	Specify the pitch for fixed or monospaced fonts. Note: Pitch refers to the number of fixed-space characters in a horizontal inch of type.

MENU ITEM	DESCRIPTION
Orientation • Portrait* • Landscape • Reverse Portrait • Reverse Landscape	Specify the orientation of text and graphics on the page.
Lines per Page 1–255	Specify the number of lines of text for each page printed through the PCL datastream. Note: • This menu item activates vertical escapement that causes the selected number of requested lines to print between the default margins of the page. • 60 is the U.S. factory default setting. 64 is the international factory default setting.
PCL5 Minimum Line Width 1–30 (2*)	Set the initial minimum stroke width. Note: Jobs printed in 4800 CQ use half the value.
PCLXL Minimum Line Width 1–30 (2*)	
A4 Width • 198mm* • 203mm	Set the width of the logical page on A4-size paper. Note: Logical page is the space on the physical page where data is printed.
Auto CR after LF • On • Off*	Set the printer to perform a carriage return after a line feed control command. Note: Carriage return is a mechanism that commands the printer to move the position of the cursor to the first position on the same line.
Auto LF after CR • On • Off*	Set the printer to perform a line feed after a carriage return control command.
Tray Renumber • Assign Tray [x] • Assign Manual Paper • Assign Manual Envelope	Configure the printer to work with a different print driver or custom application that uses a different set of source assignments to request a given paper source
Tray Renumber View Factory Defaults	Show the factory default value assigned for each paper source.
Tray Renumber	Restore the tray renumber values to their factory

MENU ITEM	DESCRIPTION
Restore Defaults	defaults.
Print Timeout • Off • On* (90 seconds)	Set the printer to end a print job after it has been idle for the specified amount of time in seconds.
Note: An asterisk (*) next to a value indicates the factory default setting.	

IMAGE

MENU ITEM	DESCRIPTION
Auto Fit • On • Off*	Select the best available paper size and orientation setting for an image. Note: When set to On, this menu item overrides the scaling and orientation settings for the image.
Invert • Off* • On	Invert bitonal monochrome images. Note: This menu item does not apply to GIF or JPEG image formats.
Scaling • Anchor Top Left • Best Fit* • Anchor Center • Fit Height/Width • Fit Height • Fit Width	Adjust the image to fit the printable area. Note: When Auto Fit is set to On, Scaling is automatically set to Best Fit.
Orientation • Portrait* • Landscape • Reverse Portrait • Reverse Landscape	Specify the orientation of text and graphics on the page.
Note: An asterisk (*) next to a value indicates the factory default setting.	

Paper

Important: Some features are system administrator functions and the options are hidden from view. For more information, refer to *Embedded Web Server Administrator Guide* at www.xerox.com/office/C410docs.

TRAY CONFIGURATION

MENU ITEM	DESCRIPTION
Default Source • Tray [x] (1*) • Multipurpose Feeder • Manual Paper • Manual Envelope	Set the paper source for all print jobs.
Paper Size/Type • Tray [x] • Multipurpose Feeder • Manual Paper • Manual Envelope	Specify the paper size or paper type loaded in each paper source.
Substitute Size • Off • Letter/A4 • All Listed*	Set the printer to substitute a specified paper size if the requested size is not loaded in any paper source. Note: • Off prompts the user to load the required paper size. • All Listed allows all available substitutions.
Note: An asterisk (*) next to a value indicates the factory default setting.	

MEDIA CONFIGURATION

Universal Setup

MENU ITEM	DESCRIPTION
Units of Measure • Inches • Millimeters	Specify the unit of measurement for the universal paper. Note: Inches is the U.S. factory default setting. Millimeters is the international factory default setting.
Portrait Width • 3.00–14.17 in. (8.50*)	Set the portrait width of the universal paper.

MENU ITEM	DESCRIPTION
• 76–360 mm (216*)	
Portrait Height • 3.00–14.17 in. (14*) • 76–360 mm (356*)	Set the portrait height of the universal paper.
Feed Direction • Short Edge* • Long Edge	Set the printer to pick paper from the short edge or long edge direction. Note: Long Edge appears only when the longest edge is shorter than the maximum width supported.
Note: An asterisk (*) next to a value indicates the factory default setting.	

Media Types

MENU ITEM	DESCRIPTION
• Plain Paper • Card Stock • Recycled • Glossy • Labels • Vinyl Labels • Bond • Envelope • Letterhead • Preprinted • Colored Paper • Light Paper • Heavy Paper • Rough/Cotton • Custom Type [x]	Specify the texture, weight, and orientation of the paper loaded. Note: Custom Type is supported only in some printer models.

USB Drive

Important: Some features are system administrator functions and the options are hidden from view. For more information, refer to *Embedded Web Server Administrator Guide* at www.xerox.com/office/C410docs.

FLASH DRIVE PRINT

MENU ITEM	DESCRIPTION
Number of Copies 1–9999 (1*)	Set the number of copies.
Paper Source • Tray [x] (1*) • Multipurpose Feeder • Manual Paper • Manual Envelope	Set the paper source for the print job.
Color • Off • On*	Print a flash drive file in color.
Collate • (1,1,1) (2,2,2) • (1,2,3) (1,2,3)*	Keep the pages of a print job stacked in sequence, particularly when printing multiple copies of the job.
Sides • 1-Sided* • 2-Sided	Specify whether to print on one side or both sides of the paper.
Flip Style • Long Edge* • Short Edge	Determine which side of the paper is bound when performing two-sided printing.
Pages per Side • Off* • 2 pages per side • 3 pages per side • 4 pages per side • 6 pages per side • 9 pages per side • 12 pages per side • 16 pages per side	Print multiple page images on one side of a sheet of paper.
Pages per Side Ordering • Horizontal* • Reverse Horizontal • Reverse Vertical	Specify the positioning of multiple page images when using Pages per Side menu.

MENU ITEM	DESCRIPTION
• Vertical	
Pages per Side Orientation • Auto* • Landscape • Portrait	Specify the orientation of multiple page images when using Pages per Side menu.
Pages per Side Border • None* • Solid	Print a border around each page image when using Pages per Side menu.
Separator Sheets • Off* • Between Copies • Between Jobs • Between Pages	Insert blank separator sheets when printing.
Separator Sheet Source • Tray [x] (1*) • Multipurpose Feeder	Specify the paper source for the separator sheet.
Blank Pages • Do Not Print* • Print	Print blank pages in a print job.
Note: An asterisk (*) next to a value indicates the factory default setting.	

Network/Ports

Important: Some features are system administrator functions and the options are hidden from view. For more information, refer to *Embedded Web Server Administrator Guide* at www.xerox.com/office/C410docs.

NETWORK OVERVIEW

MENU ITEM	DESCRIPTION
Active Adapter • Auto* • Standard Network • Wireless	Specify how a network is connected. Note: Wireless is available only in printers connected to a wireless network.
Network Status	Show the connectivity status of the printer network.
Display Network Status on Printer • Off • On*	Show the network status on the display.
Speed, Duplex	Show the speed of the currently active network card.
IPv4	Show the IPv4 address.
All IPv6 Addresses	Show all IPv6 addresses.
Reset Print Server	Reset all active network connections to the printer. Note: This setting removes all network configuration settings.
Network Job Timeout • Off • On* (90 seconds)	Set the time before the printer cancels a network print job.
Banner Page • Off* • On	Print a banner page.
Enable Network Connections • Off* • On	Enable the printer to connect to a network.
Enable LLDP • Off* • On	Enable Link Layer Discovery Protocol (LLDP) in the printer.
Note: An asterisk (*) next to a value indicates the factory default setting.	

WIRELESS

Note: This menu is available only in printers connected to a Wi-Fi network or printers that have a wireless network adapter.

MENU ITEM	DESCRIPTION
Setup On Printer Panel • Choose Network • Add Wi-Fi Network – Network Name – Network Mode – Infrastructure – Wireless Security Mode – Disabled* – WEP – WPA2/WPA - Personal – WPA2 - Personal	Configure the Wi-Fi connection using the control panel.
Wi-Fi Protected Setup • Start Push Button Method • Start PIN Method	Establish a Wi-Fi network and enable network security. Note: • Start Push-Button Method connects the printer to a Wi-Fi network when buttons on both the printer and the access point (wireless router) are pressed within a given time. • Start PIN Method connects the printer to a Wi-Fi network when a PIN on the printer is entered into the wireless settings of the access point.
Network Mode • BSS Type – Infrastructure*	Specify the network mode.
Compatibility • 802.11b/g/n (2.4GHz)* • 802.11a/b/g/n/ac (2.4GHz/5GHz) • 802.11a/n/ac (5GHz)	Specify the standard for the Wi-Fi network. Note: 802.11a/b/g/n/ac (2.4GHz/5GHz) and 802.11a/n/ac (5GHz) only appear when a Wi-Fi option is installed.
Wireless Security Mode • Disabled* • WPA2/WPA-Personal • WPA2-Personal • WPA2/WPA3-Personal	Set the security mode for connecting the printer to Wi-Fi devices.

MENU ITEM	DESCRIPTION
• WPA3-Personal • 802.1x - RADIUS	
WPA2/WPA Personal AES	Enable Wi-Fi security through Wi-Fi Protected Access (WPA). Note: This menu item appears only when the Wireless Security Mode is set to WPA2/WPA-Personal.
WPA2-Personal AES	Enable Wi-Fi security through WPA2. Note: This menu item appears only when the Wireless Security Mode is set to WPA2-Personal.
Set Pre Shared Key	Specify a password for secure Wi-Fi connection.
802.1x Encryption Mode • WPA+ • WPA2* • WPA2+PMF	Enable Wi-Fi security through 802.1x standard. Note: This menu item appears only when the Wireless Security Mode is set to 802.1x - RADIUS.
IPv4 • Enable DHCP – On* – Off • Set Static IP Address – IP Address – Netmask – Gateway	Enable and configure IPv4 settings in the printer.
IPv6 • Enable IPv6 – On* – Off • Enable DHCPv6 – On – Off* • Stateless Address Auto configuration – On* – Off • DNS Server Address	Enable and configure IPv6 settings in the printer.

MENU ITEM	DESCRIPTION
• Manually Assigned IPv6 Address • Manually Assigned IPv6 Router • Address Prefix • All IPv6 Addresses • All IPv6 Router Addresses	
Network Address • UAA • LAA	View the network addresses.
PCL SmartSwitch • Off • On*	Set the printer to switch automatically to PCL emulation when a print job requires it, regardless of the default printer language. Note: If PCL SmartSwitch is off, then the printer does not examine incoming data and uses the default printer language specified in the Setup menu.
PS SmartSwitch • Off • On*	Set the printer to switch automatically to PS emulation when a print job requires it, regardless of the default printer language. Note: If PS SmartSwitch is off, then the printer does not examine incoming data and uses the default printer language specified in the Setup menu.
Job Buffering • On • Off*	Temporarily store print jobs in the hard disk before printing. Note: This menu item appears only when a hard disk is installed.
Mac Binary PS • Auto* • On • Off	Set the printer to process Macintosh binary PostScript print jobs. Note: • On processes raw binary PostScript print jobs. • Off filters print jobs using the standard protocol.
Note: An asterisk (*) next to a value indicates the factory default setting.	

WI-FI DIRECT

MENU ITEM	DESCRIPTION
Enable Wi-Fi Direct • On • Off*	Set the printer to connect directly to Wi-Fi devices.
Wi-Fi Direct Name	Specify the name of the Wi-Fi Direct network.
Wi-Fi Direct Password	Set the password to authenticate and validate users on a Wi-Fi connection.
Show Password on Setup Page • Off • On*	Show the Wi-Fi Direct Password on the Network Setup Page.
Preferred Channel Number • 1–11 • Auto*	Set the preferred channel of the Wi-Fi network.
Group Owner IP Address	Specify the IP address of the group owner.
Auto-Accept Push Button Requests • Off* • On	Accept requests to connect to the network automatically. Note: Accepting clients automatically is not secured.
Note: An asterisk (*) next to a value indicates the factory default setting.	

AIRPRINT

MENU ITEM	DESCRIPTION
AirPrint • Enabled* • Disabled	
Bonjour Name	The name to use to identify the printer on Airprint.
Organization Name	
Organizational Unit	
Printer Location	
Printer's Latitude	GPS latitude of the printer. The range is –90 to 90.
Printer's Longitude	GPS longitude of the printer. The range is –180 to 180.
Printer's Altitude	GPS altitude of the printer. The range is –100000 to 100000.

MENU ITEM	DESCRIPTION
More Options	From the Embedded Web Server, navigate to **Settings > Network/Ports > AirPrint > More Options** for the following options.
Supplies Black Cartridge Cyan Cartridge Magenta Cartridge Yellow Cartridge Imaging Kit Waste Toner Bottle	This menu lists the supplies status/notifications.
Printer Device Type Device Speed Firmware Level Multipurpose Feeder Tray 1 Tray 2 Tray 3 Tray 4 Standard Bin	This menu lists the printer specifications and input/output tray status/notifications.
Login Methods	For more information, refer to Login Methods.
Certificate Management	For more information, refer to Certificate Management.
Confidential Print Setup	For more information, refer to Confidential Print Setup.

MOBILE SERVICES MANAGEMENT

MENU ITEM	DESCRIPTION
Enable IPP Print • On* • Off	Enable IPP Print setting in the printer.
Enable IPP Over USB • On* • Off	Enable IPP Over USB setting in the printer. Note: After changing this setting, user needs to restart the Printer.

MENU ITEM	DESCRIPTION
Enable Mopria Print Discovery • On* • Off	Enable Mopria Print Discovery setting in the printer.
Note: An asterisk (*) next to a value indicates the factory default setting.	

ETHERNET

MENU ITEM	DESCRIPTION
Network Speed	Show the speed of an active network adapter.
IPv4 • Enable DHCP (On*) • Set Static IP Address	Configure the IPv4 settings.
IPv6 • Enable IPv6 (On*) • Enable DHCPv6 (Off*) • Stateless Address Autoconfiguration (On*) • DNS Address • Manually Assigned IPV6 Address • Manually Assigned IPV6 Router • Address Prefix (64*) • All IPv6 Addresses • All IPv6 Router Addresses	Configure the IPv6 settings.
Network Address • UAA • LAA	Specify the network address.
PCL SmartSwitch • Off • On*	Set the printer to switch automatically to PCL emulation when a print job requires it, regardless of the default printer language. Note: When this setting is disabled, the printer does not examine incoming data and uses the default printer language specified in the Setup menu.
PS SmartSwitch • Off* • On	Set the printer to switch automatically to PostScript emulation when a print job requires it, regardless of the default printer language.

MENU ITEM	DESCRIPTION
	Note: When this setting is disabled, the printer does not examine incoming data and uses the default printer language specified in the Setup menu.
Job Buffering • Off* • On	Temporarily store print jobs in the hard disk before printing. Note: This menu item appears only when a hard disk is installed.
Mac Binary PS • Auto* • On • Off	Set the printer to process Macintosh binary PostScript print jobs. Note: • Auto processes print jobs from computers using either Windows or Macintosh operating systems. • Off filters PostScript print jobs using the standard protocol.
Energy Efficient Ethernet • Off • On • Auto*	Reduce power consumption when the printer does not receive data from the Ethernet network.
Note: An asterisk (*) next to a value indicates the factory default setting.	

TCP/IP

Note: This menu appears only in network printers or printers attached to print servers.

MENU ITEM	DESCRIPTION
Set Hostname	Set the current TCP/IP host name.
Domain Name	Set the domain name.
Allow DHCP/BOOTP to update NTP server • On* • Off	Allow the DHCP and BOOTP clients to update the NTP settings of the printer.
Zero Configuration Name	Specify a service name for the zero configuration network.
Enable Auto IP • Off* • On	Assign an IP address automatically.

MENU ITEM	DESCRIPTION
DNS Server Address	Specify the current Domain Name System (DNS) server address.
Backup DNS Address	Specify the backup DNS server addresses.
Backup DNS Address 2	
Backup DNS Address 3	
Domain Search Order	Specify a list of domain names to locate the printer and its resources that reside in different domains on the network.
Enable DDNS • Off* • On	Update the Dynamic DNS settings.
DDNS TTL	Specify the current DDNS settings.
Default TTL	
DDNS Refresh Time	
Enable mDNS • Off • On*	Update multicast DNS settings.
WINS Server Address	Specify a server address for Windows Internet Name Service (WINS).
Enable BOOTP • Off* • On	Allow the BOOTP to assign a printer IP address.
Restricted Server List	Specify an IP address for the TCP connections. Note: • Use a comma to separate each IP address. • You can add up to 50 IP addresses.
Restricted Server List Options • Block All Ports* • Block Printing Only • Block Printing and HTTP Only	Specify the access option for IP addresses that are not in the list.
MTU 256–1500 Ethernet (1500*)	Specify a maximum transmission unit (MTU) parameter for the TCP connections.
Raw Print Port 1–65535 (9100*)	Specify a raw port number for printers connected on a network.

MENU ITEM	DESCRIPTION
Outbound Traffic Maximum Speed • Off* • On	Set the maximum transfer rate of the printer. Note: When enabled, the option for this setting is 100–1000000 Kilobits/second.
TLS Support • TLSv1.3 is supported by default • Enable TLSv1.0 (Off) • Enable TLSv1.1 (Off*) • Enable TLSv1.2 (On*)	Enable the Transport Layer Security protocol.
SSL Cipher List	Ready Only list of cipher algorithms used for the TLS connections.
TLSv1.3 SSL Cipher List	Ready Only list of cipher algorithms used for TLSv1.3 connections.
Note: An asterisk (*) next to a value indicates the factory default setting.	

SNMP

Note: This menu appears only in network printers or printers that are attached to print servers.

MENU ITEM	DESCRIPTION
SNMP Versions 1 and 2c • Enabled – Off – On* • Allow SNMP Set – Off – On* • Enable PPM (Printer Port Monitor) MIB – Off – On* • SNMP Community – GET SNMP Community String – SET SNMP Community String	Configure Simple Network Management Protocol (SNMP) versions 1 and 2c to install print drivers and applications.
SNMP Version 3 • Enabled – Off – On* • Context Name • Set Read/Write Credentials – User Name – Authentication Password – Privacy Password • Set Read-only Credentials – User Name – Authentication Password – Privacy Password • Authentication Hash – MD5 – SHA1* • Minimum Authentication Level – No Authentication, No Privacy – Authentication, No Privacy	Configure SNMP version 3 to install and update the printer security.

MENU ITEM	DESCRIPTION
– Authentication, Privacy* • Privacy Algorithm – DES – AES-128*	
Note: An asterisk (*) next to a value indicates the factory default setting.	

IPSEC

Note: This menu appears only in network printers or printers that are attached to print servers.

MENU ITEM	DESCRIPTION
Enable IPSec • Off* • On	Enable Internet Protocol Security (IPSec).
Base Configuration • Default* • Compatibility • Secure	Set the IPSec base configuration. Note: This menu item appears only when Enable IPSec is set to On.
DH (Diffie-Hellman) Group Proposal • modp2048 (14)* • modp3072 (15) • modp4069 (16) • modp6144 (17)	Set the IPSec base configuration. Note: This menu items appear only when Base Configuration is set to Compatibility.
Proposed Encryption Method • 3DES • AES*	Set the encryption method. Note: This menu items appear only when Base Configuration is set to Compatibility.
Proposed Authentication Method • SHA1 • SHA256* • SHA512	Set the authentication method. Note: This menu items appear only when Base Configuration is set to Compatibility.
IKE SA Lifetime (Hours) • 1 • 2 • 4 • 8 • 24*	Specify the IKE SA expiry period. Note: This menu item appears only when Base Configuration is set to Secure.

MENU ITEM	DESCRIPTION
IPSec SA Lifetime (Hours) • 1 • 2 • 4 • 8* • 24	Specify the IPSec SA expiry period. Note: This menu item appears only when Base Configuration is set to Secure.
IPSec Device Certificate	Specify an IPSec certificate. Note: This menu item appears only when Enable IPSec is set to On.
Pre-Shared Key Authenticated Connections • Host [x]	Configure the authenticated connections of the printer. Note: These menu items appear only when Enable IPSec is set to On.
Certificate Authenticated Connections • Host [x] Address[/subnet]	
Note: An asterisk (*) next to a value indicates the factory default setting.	

802.1X

Note: This menu appears only in network printers or printers that are attached to print servers.

MENU ITEM	DESCRIPTION
Active • Off* • On	Let the printer join networks that require authentication before allowing access.
802.1x Authentication • Device Login Name • Device Login Password • Validate Serve Certificate (On*) • Enable Event Logging (Off*) • 802.1x Device Certificate	Configure the settings for authenticating the 802.1x connection.

MENU ITEM	DESCRIPTION
Allowable Authentication Mechanisms • EAP - MD5 (On*) • EAP - MSCHAPv2 (On*) • LEAP (On*) • PEAP (On*) • EAP - TLS (On*) • EAP - TTLS (On*) • TTLS Authentication Method – CHAP – MSCHAP – MSCHAPv2* – PAP	Configure the allowed authentication mechanisms for the 802.1x connection.
Note: An asterisk (*) next to a value indicates the factory default setting.	

LPD CONFIGURATION

Note: This menu appears only in network printers or printers that are attached to print servers.

MENU ITEM	DESCRIPTION
LPD Timeout 0–65535 seconds (90*)	Set the time-out value to stop the Line Printer Daemon (LPD) server from waiting indefinitely for hung or invalid print jobs.
LPD Banner Page • Off* • On	Print a banner page for all LPD print jobs. Note: A banner page is the first page of a print job used as a separator of print jobs and to identify the originator of the print job request.
LPD Trailer Page • Off* • On	Print a trailer page for all LPD print jobs. Note: A trailer page is the last page of a print job.
LPD Carriage Return Conversion • Off* • On	Enable carriage return conversion. Note: Carriage return is a mechanism that commands the printer to move the position of the cursor to the first position on the same line.
Note: An asterisk (*) next to a value indicates the factory default setting.	

HTTP/FTP SETTINGS

MENU ITEM	DESCRIPTION
Proxy • HTTP Proxy IP Address • HTTP Default IP Port • FTP Proxy IP Address • FTP Default IP Port • Authentication • User Name • Password • Local domains	Configure the HTTP and FTP server settings.
Other Settings	
Enable HTTP Server (On*)	Access the Embedded Web Server to monitor and manage the printer.
Enable HTTPS (On*)	Enable Hypertext Transfer Protocol Secure (HTTPS) to encrypt data transferring to and from the print server.
Force HTTPS Connections (Off*)	Force the printer to use HTTPS connections.
Enable FTP/TFTP (On*)	Send files using FTP/TFTP.
HTTPS Device Certificate (default*)	View the HTTP device certificate used on the printer.
Timeout for HTTP/FTP Requests (30*)	Specify the amount of time before the server connection stops.
Retries for HTTP/FTP Requests (3*)	Set the number of retries to connect to the HTTP/FTP server.
Note: An asterisk (*) next to a value indicates the factory default setting.	

THINPRINT

MENU ITEM	DESCRIPTION
Enable ThinPrint • Off* • On	Print using ThinPrint.
Port Number 4000–4999 (4000*)	Set the port number for the ThinPrint server.
Bandwidth (bits/sec) 100–1000000 (0*)	Set the speed to transmit data in a ThinPrint environment.

MENU ITEM	DESCRIPTION
Packet Size (kbytes) 0–64000 (0*)	Set the packet size for data transmission.
Note: For more information, refer to the *Embedded Web Server Administrator Guide*.	

USB

MENU ITEM	DESCRIPTION
PCL SmartSwitch • Off • On*	Set the printer to switch to PCL emulation when a print job received through a USB port requires it, regardless of the default printer language. Note: When this setting is disabled, the printer does not examine incoming data and uses the default printer language specified in the Setup menu.
PS SmartSwitch • Off • On*	Set the printer to switch to PS emulation when a print job received through a USB port requires it, regardless of the default printer language. Note: When this setting is disabled, the printer does not examine incoming data and uses the default printer language specified in the Setup menu.
Job Buffering • Off* • On	Temporarily store print jobs in the hard disk before printing. Note: This menu item appears only when a hard disk is installed.
Mac Binary PS • Auto* • On • Off	Set the printer to process Macintosh binary PostScript print jobs. Note: • Auto processes print jobs from computers using either Windows or Macintosh operating. • Off filters PostScript print jobs using the standard protocol.
Enable USB Port • Disable • Enable*	Enable the standard USB port.
Note: An asterisk (*) next to a value indicates the factory default setting.	

RESTRICT EXTERNAL NETWORK ACCESS

MENU ITEM	DESCRIPTION
Restrict external network access • Off* • On	If enabled the printer monitors for restricted external connections. Once detected, the printer will disable the network connection and send an E-mail notification.
External network address	Specify the network addresses with restricted access.
E-mail address for notification	Specify an e-mail address to send a notification of logged events.
Ping frequency 1–300 (10*)	Specify the network query interval in seconds.
Subject	Specify the subject and message of the notification e-mail.
Message	
Note: An asterisk (*) next to a value indicates the factory default setting.	

UNIVERSAL PRINT

Universal Print is a cloud-based print protocol that provides a simple and secure print solution for Microsoft® 365 users. Universal Print allows administrators to manage printers without the need for on-premises print servers. Universal Print enables users to access cloud printers without the need for print drivers.

You can use the Universal Print page to register your Xerox® device for Universal Print.

Prerequisites

- Microsoft Azure AD Account
- Windows 10 Client version 1903 or higher

MENU ITEM	DESCRIPTION
Status	Device is not currently registered with Universal Print.
Registration	User can use the Universal print page to register the Xerox® device for Universal Print.
Printer Name	The Default printer name appears. User can also update the Xerox® printer name.

MENU ITEM	DESCRIPTION
Register	To register, do the following steps: 1 Go to **Settings > Network/Ports > Universal Print**, then click **Register**. The Registration process authenticates the device with Microsoft® Azure® Active Directory. 2 The Register Device window appears. To copy the registration code, click **Copy**, then click the link https://microsoft.com/devicelogin. Note: The registration code expires after 15 minutes. The registration process needs to be completed before the code expires. 3 A Microsoft-managed webpage opens. Do the following steps: a Paste the registration code into the code field in the Enter code window, then click **Next**. b Select the appropriate Microsoft® account in the Pick an account window. Note: For registration, select an available Microsoft® account. The selected account is used solely to establish a trusted connection for the device with the Universal Print service. After registration, Universal Print does not use the account again. 4 A Xerox Universal Print window appears. Click **Continue** and close the window.
Note: For more information, refer to the *Embedded Web Server Administrator Guide*.	

MENU ITEM	DESCRIPTION
Status	Device is online and registered with Universal Print.
Registration	User can use the Universal print page to deregister the Xerox® device for Universal Print.
Printer Name	Registered printer name appears.
Deregister	Use this function to deregister the device from the Universal Print Service.

Additional information for Universal Print

To add a Printer from Windows Server:

1. Go to **Settings > Printer & Scanners**, then click **Add a printer or scanner**.
2. Select the printer from the printer list, then click **Add device**. If the printer does not appear in the list, do the following steps:

   a. Go to **Search for printers in my organization**.

   b. Type the registered name on the text field, and click **Search**. Once the printer appears on the list, click **Add Device**.

Note: Windows 11 supports PIN-protected printing. For example, to protect your print, you can use a 4-digit PIN between 0 and 9.

Security

Important: Some features are system administrator functions and the options are hidden from view. For more information, refer to *Embedded Web Server Administrator Guide* at www.xerox.com/office/C410docs.

LOGIN METHODS

Public

MENU ITEM	DESCRIPTION
Manage Permissions • Function Access – Modify Address Book – Manage Shortcuts – Create Profiles – Manage Bookmarks – Flash Drive Print – Flash Drive Color Printing – Held Jobs Access – Use Profiles – Cancel Jobs at the Device – Change Language – Internet Printing Protocol (IPP) – B/W Print – Color Print	Control access to the printer functions.
Manage Permissions • Administrative Menus – Security Menu – Network/Ports Menu – Paper Menu – Reports Menu – Function Configuration Menus – Supplies Menu – Option Card Menu – SE Menu – Device Menu	Control access to the printer menus.

MENU ITEM	DESCRIPTION
Manage Permissions • Device Management – Remote Management – Firmware Updates – Apps Configuration – Embedded Web Server Access – Import / Export All Settings – Out of Service Erase – Cloud Services Enrollment	Control access to the printer management options.
Manage Permissions • Apps – New Apps – Slideshow – Change Wallpaper – Screen Saver – Device Quotas	Control access to the printer applications.

Local Accounts

MENU ITEM	DESCRIPTION
Manage Groups/Permissions	Show a list of all saved groups in the printer.
Add User • User Name/Password • User Name • Password • PIN	Create local accounts to manage access to the printer functions.

Network Accounts

MENU ITEM	DESCRIPTION
Add Login Method Active Directory Status is Joined or Not Joined. Join an Active Directory Domain: • Domain • User Name • Password • Organization Unit	Control group or user access to printer functions, applications, and security settings.
Add Login Method LDAP — LDAP Setup Authentication Type • LDAP • LDAP + GSSAPI General Information • Setup Name • Server Address • Server Port • Required User Input – User Name and Password	Control group or user access to printer functions, applications, and security settings.

MENU ITEM	DESCRIPTION
– User Name Device Credentials • Anonymous LDAP Bind • Device Username • Device Password Advanced Options • Use SSL/TLS • Require Certificate • User ID Attribute • Mail Attribute • Fax Number Attribute • Full Name Attribute • Home Directory Attribute • Group Membership Attribute • Search Base • Search Timeout • Follow LDAP Referrals Search Specific Object Classes • person • Custom Object Class 1 • Custom Object Class 2 • Custom Object Class 3 Address Book Setup • Displayed Name • Max Search Results • Use user credentials • **Search Attributes** – cn – sn – givenName – samaccountname – uid – [mail attribute] – [fax attribute] – Custom Attribute 1 – Custom Attribute 2 – Custom Attribute 3	

MENU ITEM	DESCRIPTION
– Custom Filter	
Add Login Method Kerberos Setup General Simple Kerberos File • KDC Address • KDC Port • Realm Import Kerberos File • Browse Miscellaneous Settings • Character Encoding – UTF-8 – PC-858 – ISO 8859–2 – ISO 8859–5 – ISO 8859–9 • Disable Reverse IP Lookups	Control group or user access to printer functions, applications, and security settings.

CERTIFICATE MANAGEMENT

Important: Certificate Management is a System Administrator function. Sometimes this option is hidden from view. For more information, refer to *Embedded Web Server Administrator Guide* at www.xerox.com/office/C410docs.

MENU ITEM	DESCRIPTION
Configure Certificate Defaults • Common Name • Organization Name • Unit Name • Country/Region • Province Name • City Name • Subject Alternate Name	Set the default values for generated certificates.
Device Certificates	Generate, delete, or view device certificates.
Manage CA Certificates	Load, delete, or view Certificate Authority (CA) certificates.

SCHEDULE USB DEVICES

MENU ITEM	DESCRIPTION
Schedules Add New Schedule	Schedule access to the front USB port.

SECURITY AUDIT LOG

MENU ITEM	DESCRIPTION
Enable Audit Off* On	Record the events in the secure audit log and remote syslog.
Enable Remote Syslog Off* On	Send audit logs to a remote server.
Remote Syslog Server	Specify the remote syslog server.
Remote Syslog Port 1–65535 (514*)	Specify the remote syslog port.
Remote Syslog Method Normal UDP* Stunnel	Specify a syslog method to transmit logged events to a remote server.
Remote Syslog Facility 0 - Kernel Messages 1 - User-Level Messages 2 - Mail System 3 - System Daemons 4 - Security/Authorization Messages* 5 - Messages Generated Internally by Syslogs 6 - Line Printer Subsystem 7 - Network News Subsystem 8 - UUCP Subsystem 9 - Clock Daemon 10 - Security/Authorization Messages 11 - FTP Daemon	Specify a facility code that the printer uses when sending log events to a remote server

MENU ITEM	DESCRIPTION
12 - NTP Subsystem 13 - Log Audit 14 - Log Alert 15 - Clock Daemon 16 - Local Use 0 (local0) 17- Local Use 1 (local1) 18 - Local Use 2 (local2) 19 - Local Use 3 (local3) 20 - Local Use 4 (local4) 21 - Local Use 5 (local5) 22 - Local Use 6 (local6) 23 - Local Use 7 (local7)	
Severity of Events to Log 0 - Emergency 1 - Alert 2 - Critical 3 - Error 4 - Warning* 5 - Notice 6 - Informational 7 - Debug	Specify the priority level cutoff for logging messages and events.
Remote Syslog Non-Logged Events Off* On	Send all events, regardless of severity level, to the remote server.
Admin's E-mail Address	Send e-mail notification of logged events to the administrator.
E-mail Log Cleared Alert Off* On	Send e-mail notification to the administrator when a log entry is deleted.
E-mail Log Wrapped Alert Off*	Send e-mail notification to the administrator when the log becomes full and begins to overwrite the oldest entries.

MENU ITEM	DESCRIPTION
On	
Log Full Behavior Wrap Over Oldest Entries* E-mail Log Then Delete All Entries	Resolve log storage issues when the log fills its allotted memory.
E-mail % Full Alert Off* On	Send e-mail notification to the administrator when the log fills its allotted memory.
% Full Alert Level 1–99 (90*)	
E-mail Log Exported Alert Off* On	Send e-mail notification to the administrator when a log is exported.
E-mail Log Settings Changed Off* On	Send e-mail notification to the administrator when Enable Audit is set.
Log Line Endings LF (\n)* CR (\r) CRLF (\r\n)	Specify how the log file terminates the end of each line.
Digitally Sign Exports Off* On	Add a digital signature to each exported log file.
Clear Log	Delete all audit logs.
Export Log Syslog (RFC 5424)* Syslog (RFC 3164) CSV	Export a security log to a flash drive.
Note: An asterisk (*) next to a value indicates the factory default setting.	

LOGIN RESTRICTIONS

MENU ITEM	DESCRIPTION
Login failures 1–10 (3*)	Specify the number of failed login attempts before the user gets locked out.
Failure time frame 1–60 minutes (5*)	Specify the time frame between failed login attempts before the user gets locked out.
Lockout time 1–60 minutes (5*)	Specify the lockout duration.
Web Login Timeout 1–120 minutes (10*)	Specify the delay for a remote login before the user is logged off automatically.
Note: An asterisk (*) next to a value indicates the factory default setting.	

CONFIDENTIAL PRINT SETUP

MENU ITEM	DESCRIPTION
Max Invalid PIN 2–10. Off = 0	Set the limit for entering an invalid PIN. Note: When the limit is reached, the print jobs for that user name are deleted.
Confidential Job Expiration • Off* • 1 Hour • 4 Hours • 24 Hours • 1 Week	Set an individual expiration time for each held job before it is automatically deleted from the hard disk. Note: A held job is either Confidential, Repeat, Reserve, or Verify. .
Repeat Job Expiration • Off* • 1 Hour • 4 Hour • 24 Hour • 1 Week	Set the expiration time for a print job that you want to repeat.
Verify Job Expiration • Off* • 1 Hour • 4 Hour • 24 Hour • 1 Week	Set the expiration time for printing a copy of a job for you to check its quality before printing the remaining copies.

MENU ITEM	DESCRIPTION
Reserve Job Expiration • Off* • 1 Hour • 4 Hour • 24 Hour • 1 Week	Set the expiration time for jobs that you want to store in the printer for printing later.
Require All Jobs to be Held • Off* • On	Set the printer to hold all print jobs.
Keep duplicate documents • Off* • On	Set the printer to keep all documents with the same file name.
Note: An asterisk (*) next to a value indicates the factory default setting.	

DISK ENCRYPTION

Note: This application is supported only in printers with the optional Productivity Kit.

MENU ITEM	DESCRIPTION
Status Enabled	Encryption happens automatically when a storage drive is installed.

ERASE TEMPORARY DATA FILES

Note: This application is supported only in printers with the optional Productivity Kit.

MENU ITEM	DESCRIPTION
Stored in onboard memory • Off* • On	Delete all files stored on the printer memory.
Stored on hard disk • 1 Pass Erase* • 3 Pass Erase • 7 Pass Erase	Delete all files stored on the printer hard disk. Note: This menu item appears only when a printer hard disk is installed.
Note: An asterisk (*) next to a value indicates the factory default setting.	

SOLUTIONS LDAP SETTINGS

MENU ITEM	DESCRIPTION
Follow LDAP Referrals • Off* • On	Search the different servers in the domain for the logged-in user account.
LDAP Certificate Verification • Yes • No*	Enable verification of LDAP certificates.
Note: An asterisk (*) next to a value indicates the factory default setting.	

MISCELLANEOUS

MENU ITEM	DESCRIPTION
Protected Features • Show* • Hide	Show all the features that Function Access Control (FAC) protects regardless of the security permission that the user has. Note: Hide displays only FAC-protected features that the user has access.
Print Permission • Off* • On	Enables the user to print color or black and white depends on the permission configuration for the user. When used with the 'Color Print' Feature Access Control, this will restrict access to color printing to a specific set of authenticated users.
Default Print Permission Login • User Name/Password* • User Name	Set the default login for Print Permission. Selects the default login type. Only shown when more than one user account login type has been enabled on the device.
Security Reset Jumper • Enable "Guest" access* • No Effect	Enables the use of the Security Reset Jumper on the controller PWBA to reset the Admin password.
Reset Device Modes • Allow with FAC • Allow* • Don't Allow	Enables access to the Out of Service Erase menu to restore the printer settings back to factory default.
Minimum Password Length 0–32 (0*)	Specify the password length.

MENU ITEM	DESCRIPTION
Enable Password/PIN Reveal • Off* • On	Show the password or personal identification number. When enabled, the user login screen on the control panel will include the capability to show/hide the password that is being entered in the login window.
Note: An asterisk (*) next to a value indicates the factory default setting.	

Reports

Important: Some features are system administrator functions and the options are hidden from view. For more information, refer to *Embedded Web Server Administrator Guide* at www.xerox.com/office/C410docs.

MENU SETTINGS PAGE

MENU ITEM	DESCRIPTION
Menu Settings Page	Print a report that contains the printer menus.

DEVICE

MENU ITEM	DESCRIPTION
Device Information	Print a report that contains information about the printer.
Device Statistics	Print a report about printer usage and supply status.
Profile List	Print a list of profiles that are stored in the printer.
Asset Report	Print a diagnostic tool for print problems. Note: To avoid clipping the content, print the report on letter- or A4-size paper.

PRINT

MENU ITEM	DESCRIPTION
Print Fonts • PCL Fonts • PS Fonts	Print samples and information about the fonts that are available in each printer language.
Print Demo Demo Page	Print a page that shows the printer capabilities and supported solutions.
Print Directory	Print the resources that are stored in the flash drive, hard disk. Note: This menu item appears only when a flash drive, a hard disk is installed.

NETWORK

MENU ITEM	DESCRIPTION
Network Setup Page	Print a page that shows the configured network and wireless settings on the printer. Note: This menu item appears only in network printers or printers connected to print servers.
Wi-Fi Direct Connected Clients	Print a page that shows the list of devices that are connected to the printer using Wi-Fi Direct. Note: This menu item appears only when Enable Wi-Fi Direct is set to On.

Supplies Plan

PLAN ACTIVATION

MENU ITEM	DESCRIPTION
• Sequence Number • Device Serial Number • Activation Code	It describes the details of the activation process for the purchased Supplies plan. Contact your Xerox representative to get a Supplies Activation Code. Subscription Service plans are not offered in all geographic locations For more information about Xerox®supplies and service plans, contact your Xerox representative.

PLAN CONVERSION

MENU ITEM	DESCRIPTION
• Current Plan • Device Serial Number • Total Impressions • Conversion Code	It describes the details of the conversion process for the existing Supplies plan. Contact your Xerox representative to get a Supplies Conversion Code. Subscription Service plans are not offered in all geographic locations For more information about Xerox®supplies and service plans, contact your Xerox representative.

SUBSCRIPTION SERVICE

MENU ITEM	DESCRIPTION
• Status	It indicates the subscription status.
• Check Subscription	To activate a Subscription Service Plan, do the following: 1 Go to **Settings > Supplies Plan > Subscription Service**. 2 For Subscription Service, click **Check Subscription**, then follow the directions provided by your Xerox representative.

Troubleshooting

MENU ITEM	DESCRIPTION
Print Quality Test Pages	Print sample pages to identify and correct print quality defects.

Printing the Menu Settings Page

From the home screen, touch **Settings > Reports > Menu Settings Page**.

Maintenance

This chapter contains:

Checking the Status of Parts and Supplies 164
Configuring Supply Notifications 165
Setting up E-mail Alerts 166
Viewing Reports 167
Ordering Supplies 168
Replacing Supplies 169
Cleaning Printer Parts 176
Saving Energy and Paper 178
Moving the Printer to Another Location 179

Checking the Status of Parts and Supplies

1. From the home screen, touch **Status/Supplies**.
2. Select the parts or supplies that you want to check.

Note: You can also access this setting by touching the top section of the home screen.

Configuring Supply Notifications

1. Open a web browser, and then type the printer IP address in the address field.
   - View the printer IP address on the printer home screen. The IP address appears as four sets of numbers separated by periods, such as 123.123.123.123.
   - If you are using a proxy server, then temporarily disable it to load the web page correctly.
2. Click **Settings > Device > Notifications**.
3. From the Supplies menu, click **Custom Supply Notifications**.
4. Select a notification for each supply item.
5. Apply the changes.

Setting up E-mail Alerts

Configure the printer to send e-mail alerts when supplies are low, when paper must be changed or added, or when there is a paper jam.

1. Open a web browser, and then type the printer IP address in the address field.
   - View the printer IP address on the printer home screen. The IP address appears as four sets of numbers separated by periods, such as 123.123.123.123.
   - If you are using a proxy server, then temporarily disable it to load the web page correctly.
2. Click **Settings > Device > Notifications > E-mail Alert Setup**, and then configure the settings.

   Note: For more information on SMTP settings, contact your e-mail provider.
3. Apply the changes.
4. Click **Setup E-mail Lists and Alerts**, and then configure the settings.
5. Apply the changes.

Viewing Reports

1. From the home screen, touch **Settings > Reports**.
2. Select the report that you want to view.

Ordering Supplies

To view and order supplies for your printer, go to https://www.xerox.com/supplies, then enter your product in the search field.

Note: All life estimates for printer supplies assume printing on letter or A4-size plain paper.

Warning: Failure to maintain optimum printer performance or to replace supplies can cause damage to your printer.

USING GENUINE XEROX SUPPLIES

Your Xerox printer is designed to function best with genuine Xerox supplies. Use of third-party supplies can affect the performance, reliability, or life of the printer and its imaging components. It can also affect warranty coverage. Damage caused by the use of third-party supplies is not covered by the warranty.

All life indicators are designed to function with Xerox supplies and can deliver unpredictable results if third-party supplies are used. Imaging component usage beyond the intended life can damage your Xerox printer or associated components.

Warning: Supplies without Return Program agreement terms can be reset and remanufactured. However, the manufacturer's warranty does not cover any damage caused by non-genuine supplies. Resetting counters on the supply without proper remanufacturing can cause damage to your printer. After resetting the supply counter, your printer may display an error indicating the presence of the reset item.

Replacing Supplies

REPLACING A TONER CARTRIDGE

1. Open Door B.

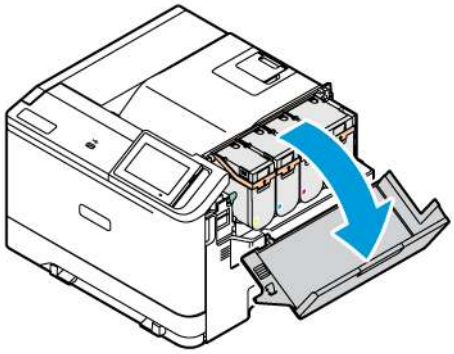

2. Remove the used toner cartridge.

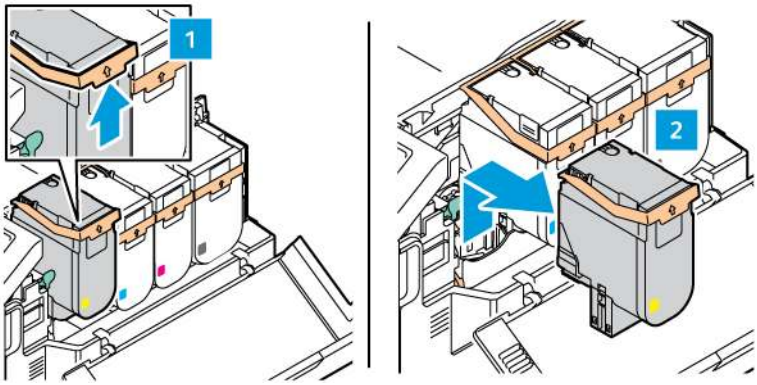

3. Unpack the new toner cartridge.

4. Insert the new toner cartridge until it *clicks* into place.

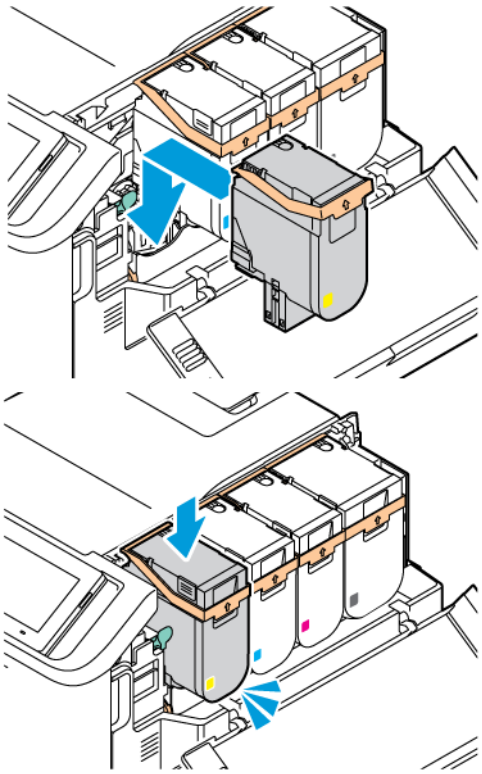

5. Close Door B.

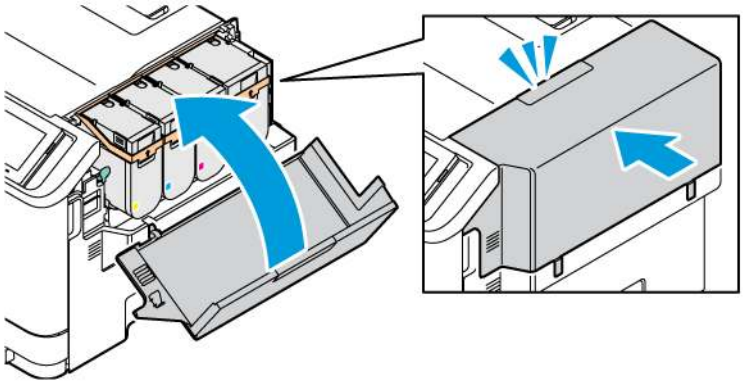

REPLACING THE WASTE TONER BOTTLE

1. Remove the used waste toner bottle.

   Note: To avoid spilling the toner, place the bottle in an upright position.

2. Unpack the new waste toner bottle.

3. Insert the new waste toner bottle.

REPLACING THE IMAGING KIT

When it is time to replace the imaging unit, the printer displays a message appears on the control panel.

Use Imaging Kit to replace the imaging unit. There are two types of Imaging Kit available for your printer:

- Black Imaging Kit
- Four Color Imaging Kit for Cyan, Magenta, Yellow, and Black

Warning: Do not perform this procedure when the printer is copying or printing.

1. Open Door A and Door B.

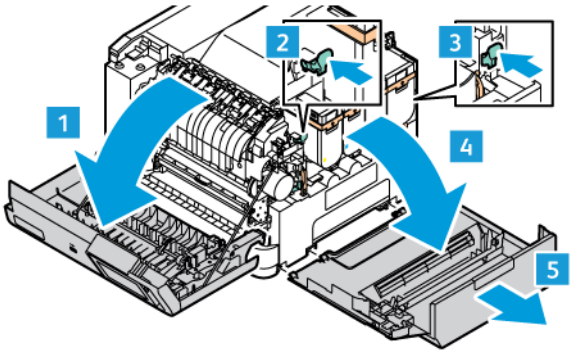

2. Remove the waste toner bottle.

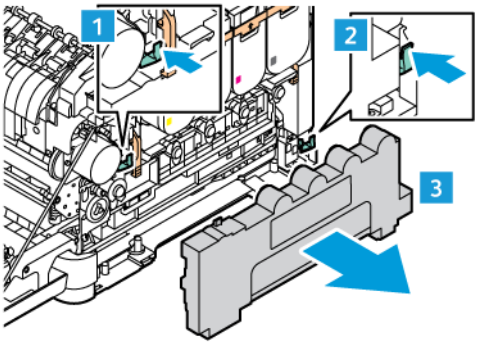

3. Remove the toner cartridge from the printer.

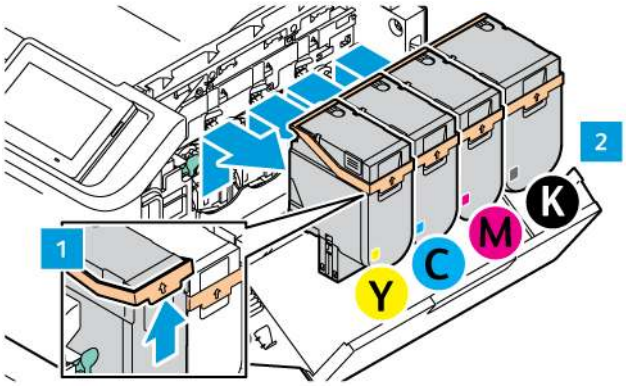

4. Do the following to remove the existing Imaging Kit:

   a. To unlock the Imaging Kit, pull up the lever.

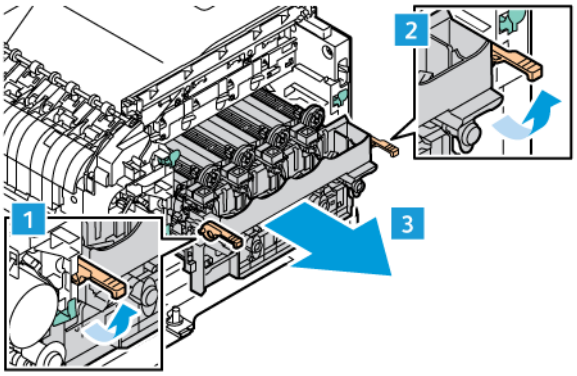

   b. Pull the Imaging Kit out slowly from the printer and take out the Imaging Kit by holding the handles on both sides.

Note: Refer to the installation instructions included in the Imaging Kit.

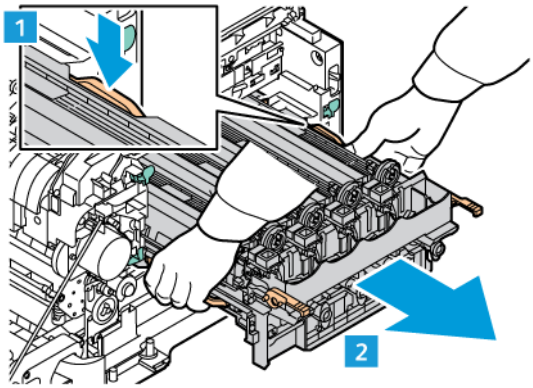

5. Unlock and remove the required imaging unit from the Imaging Kit.

> **Caution:** Do not expose the photoconductor unit to direct light for more than 10 minutes. Extended exposure to light may cause print quality problems.

> **Warning:** Do not touch the shiny photoconductor drum under the imaging unit. Doing so may affect the quality of future print jobs.

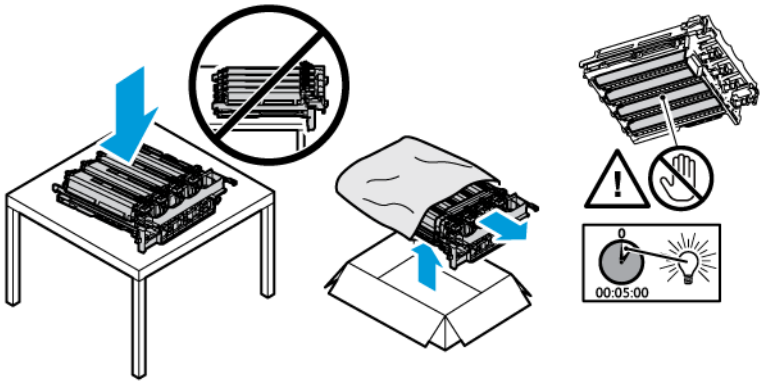

6. Insert the imaging unit from the Imaging Kit.

   Four Color Imaging Kit for Cyan, Magenta, Yellow, and Black.

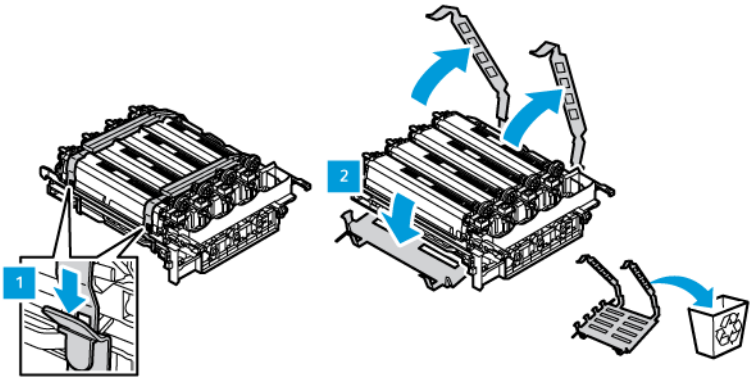

   For Black Imaging Kit.

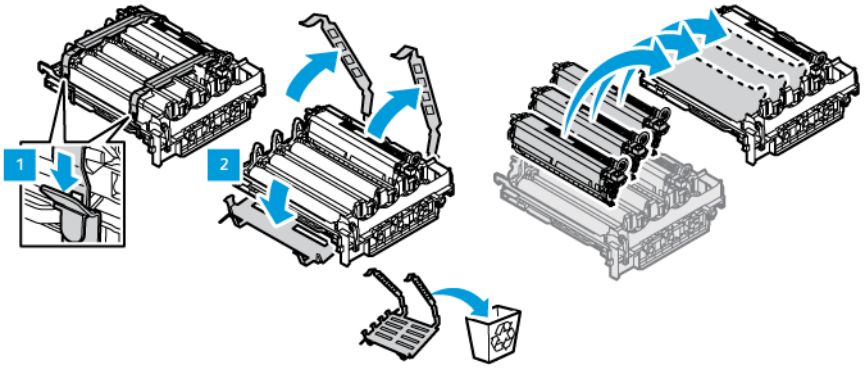

7. Hold the handles of the Imaging Kit and insert it back into the printer.

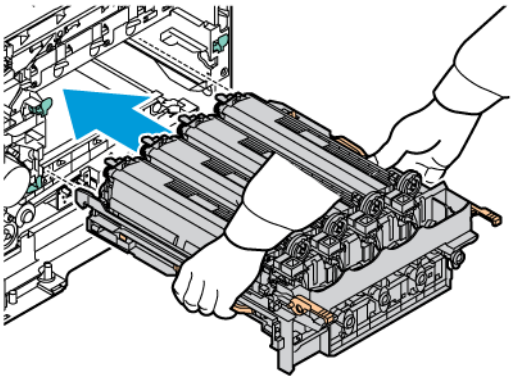

8. To lock the Imaging Kit, pull down the lever.

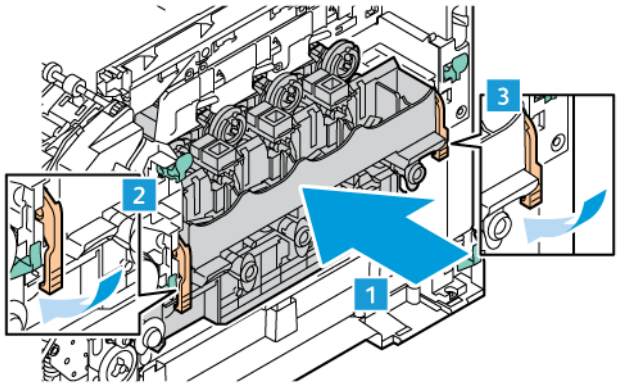

9. Insert the toner cartridge back into the Imaging Kit.

Note: Refer to the installation instructions included in the Imaging Kit.

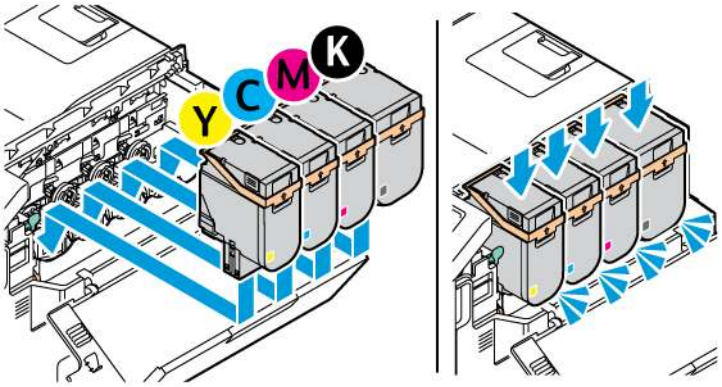

10. Insert the waste toner container back into the printer.

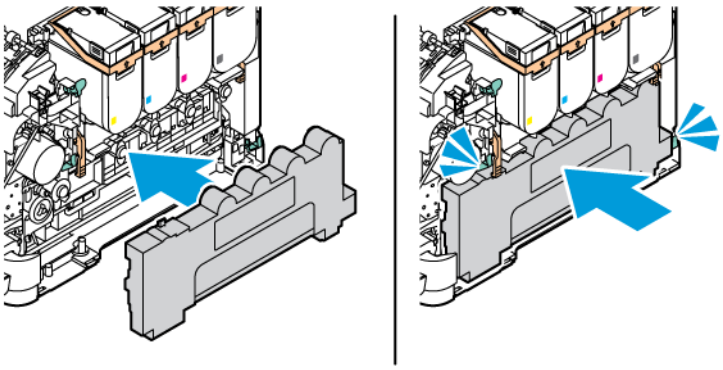

11. Close Door B and Door A.

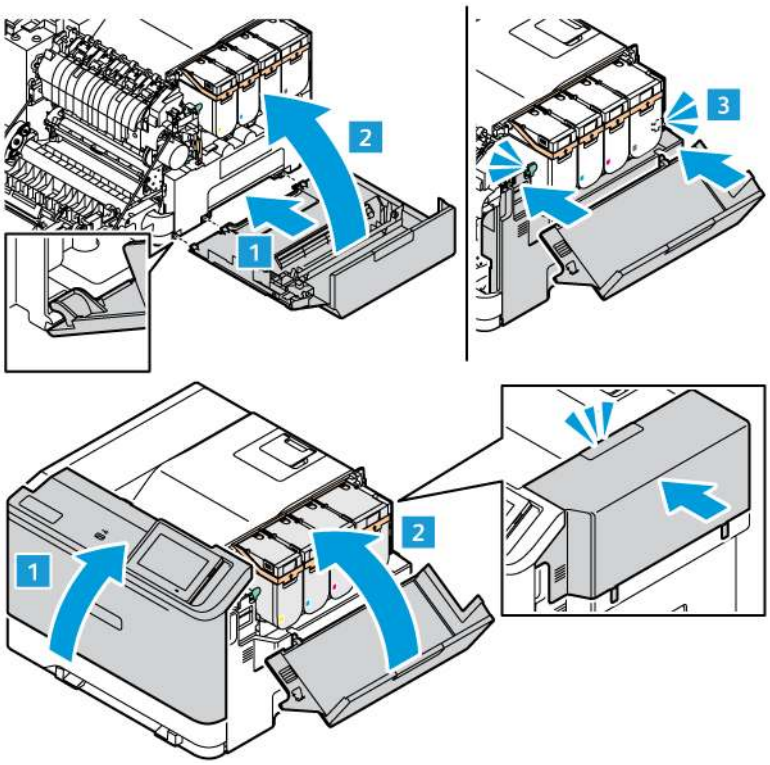

RESETTING THE SUPPLY USAGE COUNTERS

1. From the home screen, touch **Settings > Device > Maintenance > Configuration Menu > Supply Usage And Counters**.
2. Select the counter that you want to reset.

> **Warning:** Supplies and parts without Return Program agreement terms may be reset and remanufactured. However, the manufacturer's warranty does not cover any damage caused by non-genuine supplies or parts. Resetting counters on the supply or part without proper remanufacturing can cause damage to your printer. After resetting the supply or part counter, your printer may display an error indicating the presence of the reset item.

Cleaning Printer Parts

CLEANING THE PRINTER

CAUTION—SHOCK HAZARD: To avoid the risk of electrical shock when cleaning the exterior of the printer, unplug the power cord from the electrical outlet and disconnect all cables from the printer before proceeding.

- Perform this task after every few months.
- Damage to the printer caused by improper handling is not covered by the printer warranty.

1. Turn off the printer, and then unplug the power cord from the electrical outlet.
2. Remove paper from the standard bin and multipurpose feeder.
3. Remove any dust, lint, and pieces of paper around the printer using a soft brush or vacuum.
4. Wipe the outside of the printer with a damp, soft, lint-free cloth.
   - Do not use household cleaners or detergents, as they may damage the finish of the printer.
   - Make sure that all areas of the printer are dry after cleaning.
5. Connect the power cord to the electrical outlet, and then turn on the printer.

CAUTION—POTENTIAL INJURY: To avoid the risk of fire or electrical shock, connect the power cord to an appropriately rated and properly grounded electrical outlet that is near the product and easily accessible.

CLEANING THE TOUCH SCREEN

CAUTION—SHOCK HAZARD: To avoid the risk of electric shock when cleaning the exterior of the printer, unplug the power cord from the electrical outlet and disconnect all cables from the printer before proceeding.

1. Turn off the printer, and then unplug the power cord from the electrical outlet.
2. Using a damp, soft, lint-free cloth, wipe the control panel.
   - Do not use household cleaners or detergents, as they may damage the control panel screen..
   - Make sure that the control panel screen is dry after cleaning.
3. Connect the power cord to the electrical outlet, and then turn on the printer.

CAUTION—POTENTIAL INJURY: To avoid the risk of fire or electrical shock, connect the power cord to an appropriately rated and properly grounded electrical outlet that is near the product and easily accessible.

CLEANING THE FEED ROLLS

1. Turn off the printer, and then unplug the power cord from the electrical outlet.

2. Remove the tray.

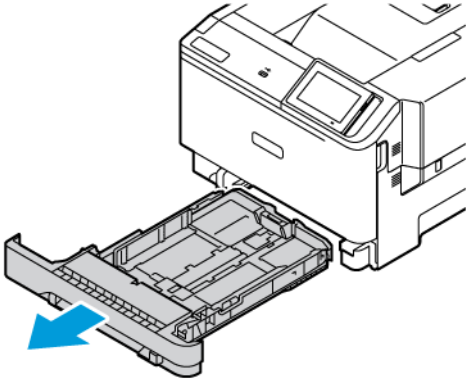

3. While turning the feed rolls, wipe them with a clean, lint-free cloth moistened with water.

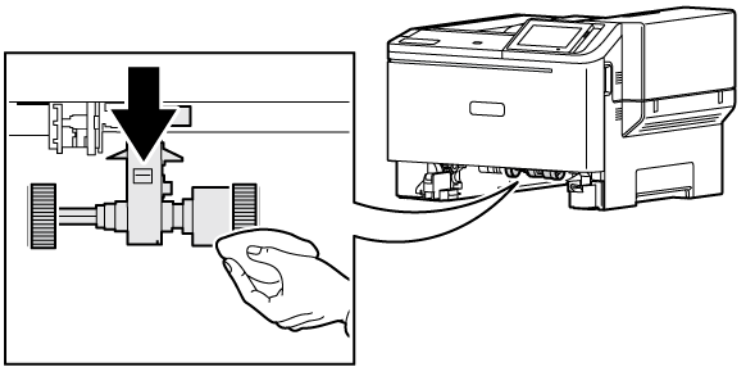

Important: If the feed rolls come off during cleaning, make sure to reinstall them correctly as shown. Incorrect installation of feed rolls can result in paper jam.

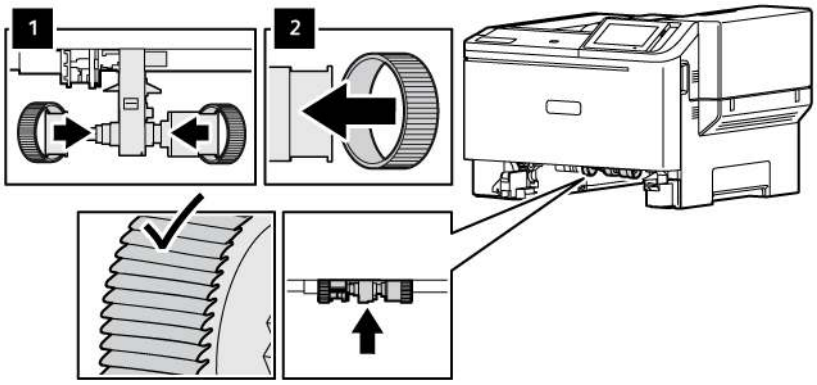

4. Insert the tray.
5. Connect the power cord to the printer, and then to the electrical outlet, and then turn on the printer.

CAUTION—POTENTIAL INJURY: To avoid the risk of fire or electrical shock, connect the power cord to an appropriately rated and properly grounded electrical outlet that is near the product and easily accessible.

Saving Energy and Paper

CONFIGURING POWER SAVE MODE SETTINGS

Sleep Mode

1. From the home screen, touch **Settings > Device > Power Management > Timeouts > Sleep Mode** .
2. Specify the amount of time that the printer stays idle before it enters Sleep mode.

Hibernate Mode

1. From the home screen, touch **Settings > Device > Power Management > Timeouts > Hibernate Mode** .
2. Select the amount of time that the printer stays idle before it enters Hibernate mode.
   - For Hibernate Timeout to work, set Hibernate Timeout on Connection to Hibernate.
   - The Embedded Web Server is disabled when the printer is in Hibernate mode.

ADJUSTING THE BRIGHTNESS OF THE DISPLAY

1. From the home screen, touch **Settings > Device > Preferences**.
2. In the Screen Brightness menu, adjust the setting.

CONSERVING SUPPLIES

- Print on both sides of the paper.

  Note: Two-sided printing is the default setting in the print driver.
- Print multiple pages on a single sheet of paper.
- Use the preview feature to see how the document looks like before printing it.
- Print one copy of the document to check its content and format for accuracy.

Moving the Printer to Another Location

CAUTION—POTENTIAL INJURY: If the printer weight is greater than 20kg (44lb), then it may require two or more people to lift it safely.

CAUTION—POTENTIAL INJURY: To avoid the risk of fire or electrical shock, use only the power cord provided with this product or the manufacturer's authorized replacement.

CAUTION—POTENTIAL INJURY: When moving the printer, follow these guidelines to avoid personal injury or printer damage:

- Make sure that all doors and trays are closed.
- Turn off the printer, and then unplug the power cord from the electrical outlet.
- Disconnect all cords and cables from the printer.
- If the printer has separate floor-standing optional trays or output options attached to it, then disconnect them before moving the printer.
- If the printer has a caster base, then carefully roll it to the new location. Use caution when passing over thresholds and breaks in flooring.
- If the printer does not have a caster base but is configured with optional trays or output options, then remove the output options and lift the printer off the trays. Do not try to lift the printer and any options at the same time.
- Always use the handholds on the printer to lift it.
- Any cart used to move the printer must have a surface able to support the full footprint of the printer.
- Any cart used to move the hardware options must have a surface able to support the dimensions of the options.
- Keep the printer in an upright position.
- Avoid severe jarring movements.
- Make sure that your fingers are not under the printer when you set it down.
- Make sure that there is adequate clearance around the printer.

Note: Damage to the printer caused by improper moving is not covered by the printer warranty.

Troubleshooting

This chapter contains:

Print Quality Problems 182
Printing Problems 183
The Printer is not Responding 223
Network Connection Problems 225
Issues with Supplies 228
Clearing Jams 230
Paper Feed Problems 237
Color Quality Problems 241
Contacting Customer Support 244

Print Quality Problems

Find the image that resembles the print quality problem you are having, and then click the link below it to read problem-solving steps.

- Blank or White Pages
- Dark Print
- Ghost Images
- Gray or Colored Background
- Incorrect Margins
- Light Print
- Missing Colors
- Mottled Print and Dots
- Paper Curl
- Print Crooked or Skewed
- Solid Color or Black Images
- Text or Images Cut Off
- Toner Easily Rubs Off
- Uneven Print Density
- Horizontal Dark Lines
- Vertical Dark Lines
- Horizontal White Lines
- Vertical White Lines
- Repeating Defects

Printing Problems

PRINT QUALITY IS POOR

Blank or White Pages

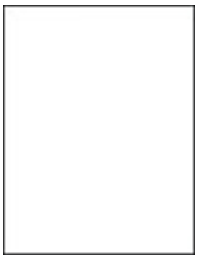

Note: Before solving the problem, print the Print Quality Test Pages.

To print test pages, refer to the following information:

1. From the control panel, navigate to **Settings > Troubleshooting > Print Quality Test Pages**.
2. For printer models without a touch-screen, to navigate through the settings, press the **OK** button.

ACTION	YES	NO
Step 1 1 Check if the printer is using a genuine and supported Xerox toner cartridge. Note: If the cartridge is not supported, then install a supported one. 2 Print the document. Is the printer printing blank or white pages?	Go to step 2.	The problem is solved.
Step 2 1 Remove the color imaging kit, and then remove the black imaging unit. **Warning—Potential Damage:** Do not expose the color imaging kit and black imaging unit to direct light for more than 10 minutes. Extended exposure to light may cause print quality problems. **Warning:** Do not touch the photoconductor drum under the color imaging kit and black imaging unit. Doing so may affect the quality of future print jobs. 2 Insert the black imaging unit, and then insert the color imaging kit. 3 Print the document. Is the printer printing blank or white pages?	Contact Contacting Customer Support	The problem is solved.

Dark Print

Note: Before solving the problem, print the quality sample pages to determine the missing color. From the control panel, navigate to **Settings > Troubleshooting > Print Quality Test Pages**. For non-touch-screen printer models, press **OK** to navigate through the settings.

ACTION	YES	NO
Step 1 1 Perform Color Adjust. From the control panel, navigate to: **Settings > Print > Quality > Advanced Imaging > Color Adjust**. 2 Print the document. Is the print too dark?	Go to step 2.	The problem is solved.
Step 2 1 Depending on your operating system, reduce the toner darkness from the Printing Preferences or Print dialog. Note: You can also change the setting on the printer control panel. Navigate to: **Settings > Print > Quality > Toner Darkness**. 2 Print the document. Is the print too dark?	Go to step 3.	The problem is solved.
Step 3 1 Depending on your operating system, specify the paper type from the Printing Preferences or Print dialog.	Go to step 4.	The problem is solved.

ACTION	YES	NO
Note: Make sure that the settings matches the paper loaded in the tray. Note: You can also change the settings on the printer control panel. Navigate to: **Settings > Paper > Tray Configuration > Paper Size/Type**. 2 Print the document. Is the print too dark?		
Step 4 Check if the paper has texture or rough finishes. Are you printing on textured or rough paper? Is the print too dark?	Go to step 5.	The problem is solved.
Step 5 1 Replace textured or rough paper with plain paper. 2 Print the document. Is the print too dark?	Go to step 6.	The problem is solved.
Step 6 1 Load paper from a fresh package. Note: Paper absorbs moisture due to high humidity. Store paper in its original wrapper until you are ready to use it. 2 Print the document. Is the print too dark?	Contact Contacting Customer Support	The problem is solved.

Ghost Images

Note: Before solving the problem, print the Print Quality Test Pages. From the control panel, navigate to **Settings > Troubleshooting > Print Quality Test Pages**. For non-touch-screen printer models, press **OK** to navigate through the settings.

ACTION	YES	NO
Step 1 1 Load the tray with the correct paper type and weight. 2 Print the document. Do ghost images appear on prints?	Go to step 2.	The problem is solved.
Step 2 1 Depending on your operating system, specify the paper type from the Printing Preferences or Print dialog. Note: Make sure that the settings matches the paper loaded in the tray. Note: You can also change the settings on the printer control panel. Navigate to: **Settings > Paper > Tray Configuration > Paper Size/Type**. 2 Print the document. Do ghost images appear on prints?	Go to step 3.	The problem is solved.
Step 3 1 Perform Color Adjust. From the control panel, navigate to: **Settings > Print > Quality > Advanced Imaging > Color Adjust**. 2 Print the document. Do ghost images appear on prints?	Contact Contacting Customer Support	The problem is solved.

Gray or Colored Background

Note: Before solving the problem, print the Print Quality Test Pages. From the control panel, navigate to **Settings > Troubleshooting > Print Quality Test Pages**. For non-touch-screen printer models, press **OK** to navigate through the settings.

ACTION	YES	NO
Step 1 1 Depending on your operating system, increase toner darkness from the Printing Preferences or Print dialog. Note: You can also change the setting on the printer control panel. Navigate to: **Settings > Print > Quality > Toner Darkness**. 2 Print the document. Does gray or colored background appear on prints?	Go to step 2.	The problem is solved.
Step 2 1 Perform Color Adjust. From the control panel, navigate to: **Settings > Print > Quality > Advanced Imaging > Color Adjust**. 2 Print the document. Does gray or colored background appear on prints?	Go to step 3.	The problem is solved.
Step 3 1 Remove the color imaging kit, and then remove the black imaging unit. **Warning—Potential Damage:** Do not expose the color imaging kit and black imaging unit to direct light for more than 10 minutes. Extended exposure to light may cause print quality problems. **Warning:** Do not touch the	Contact Contacting Customer Support	The problem is solved.

ACTION	YES	NO
photoconductor drum under the color imaging kit and black imaging unit. Doing so may affect the quality of future print jobs. 2 Insert the black imaging unit, and then insert the color imaging kit. 3 Print the document. Does gray or colored background appear on prints?		

Incorrect Margins

Note: Before solving the problem, print the Print Quality Test Pages. From the control panel, navigate to **Settings > Troubleshooting > Print Quality Test Pages**. For non-touch-screen printer models, press **OK** to navigate through the settings.

ACTION	YES	NO
Step 1 1 Adjust the paper guides in the tray to the correct position for the paper loaded. 2 Print the document. Are the margins correct?	The problem is solved.	Go to step 2.
Step 2 1 Depending on your operating system, specify the paper size from the Printing Preferences or Print dialog. Note: Make sure that the settings matches the paper loaded in the tray. Note: You can also change the settings on the printer control panel. Navigate to: **Settings > Paper > Tray Configuration > Paper Size/Type**. 2 Print the document. Are the margins correct?	The problem is solved.	Contact Contacting Customer Support

Light Print

Note: Before solving the problem, print the Print Quality Test Pages. From the control panel, navigate to **Settings > Troubleshooting > Print Quality Test Pages**. For non-touch-screen printer models, press **OK** to navigate through the settings.

ACTION	YES	NO
Step 1 1 Perform Color Adjust. From the control panel, navigate to: **Settings > Print > Quality > Advanced Imaging > Color Adjust**. 2 Print the document. Is the print light?	Go to step 2.	The problem is solved.
Step 2 1 Depending on your operating system, reduce the toner darkness from the Printing Preferences or Print dialog. Note: You can also change the setting on the printer control panel. Navigate to: **Settings > Print > Quality > Toner Darkness**. 2 Print the document. Is the print light?	Go to step 3.	The problem is solved.
Step 3 1 Turn off Color Saver. From the control panel, navigate to: **Settings > Print > Quality > Color Saver**. 2 Print the document. Is the print light?	Go to step 4.	The problem is solved.
Step 4 1 Depending on your operating system, specify the paper type from the Printing Preferences or Print dialog. Note: Make sure that the settings matches the paper loaded in the tray.	Go to step 5.	The problem is solved.

ACTION	YES	NO
Note: You can also change the settings on the printer control panel. Navigate to: **Settings > Paper > Tray Configuration > Paper Size/Type**. 2 Print the document. Is the print light?		
Step 5 Check if the paper has texture or rough finishes. Are you printing on textured or rough paper? Is the print light?	Go to step 6.	The problem is solved.
Step 6 1 Replace textured or rough paper with plain paper. 2 Print the document. Is the print light?	Go to step 7.	The problem is solved.

ACTION	YES	NO
Step 7 1 Load paper from a fresh package. Note: Paper absorbs moisture due to high humidity. Store paper in its original wrapper until you are ready to use it. 2 Print the document. Is the print light?	Go to step 8.	The problem is solved.
Step 8 1 Remove the color imaging kit, and then remove the black imaging unit. **Warning—Potential Damage:** Do not expose the color imaging kit and black imaging unit to direct light for more than 10 minutes. Extended exposure to light may cause print quality problems. **Warning:** Do not touch the photoconductor drum under the color imaging kit and black imaging unit. Doing so may affect the quality of future print jobs. 2 Insert the black imaging unit, and then insert the color imaging kit. 3 Print the document. Is the print light?	Contact Contacting Customer Support	The problem is solved.

Missing Colors

Note: Before solving the problem, print the Print Quality Test Pages. From the control panel, navigate to **Settings > Troubleshooting > Print Quality Test Pages**. For non-touch-screen printer models, press **OK** to navigate through the settings.

ACTION	YES	NO
1 Remove the color imaging kit, and then remove the black imaging unit. **Warning—Potential Damage:** Do not expose the color imaging kit and black imaging unit to direct light for more than 10 minutes. Extended exposure to light may cause print quality problems. **Warning:** Do not touch the photoconductor drum under the color imaging kit and black imaging unit. Doing so may affect the quality of future print jobs. 2 Remove the toner cartridge of the missing color. 3 Remove, and then insert the developer unit of the missing color. 4 Insert the toner cartridge of the missing color. 5 Insert the color imaging kit. 6 Print the document. Are some colors missing on print?	Contact Contacting Customer Support	The problem is solved.

Mottled Print and Dots

Note: Before solving the problem, print the Print Quality Test Pages. From the control panel, navigate to **Settings > Troubleshooting > Print Quality Test Pages**. For non-touch-screen printer models, press **OK** to navigate through the settings.

ACTION	YES	NO
Step 1 Check the printer for leaked toner contamination. Is the printer free of leaked toner?	Go to step 2.	Contact Contacting Customer Support
Step 2 1 From the control panel, navigate to: **Settings > Paper > Tray Configuration > Paper Size/ Type**. 2 Check if the paper size and paper type settings match the paper loaded. Note: Make sure that paper does not have texture or rough finishes. Do the settings match?	Go to step 4.	Go to step 3.
Step 3 1 Depending on your operating system, specify the paper type from the Printing Preferences or Print dialog. Note: Make sure that the settings matches the paper loaded in the tray.	Go to step 4.	The problem is solved.

ACTION	YES	NO
Note: You can also change the settings on the printer control panel. Navigate to: **Settings > Paper > Tray Configuration > Paper Size/Type**. 2 Print the document. Is the print mottled?		
Step 4 1 Load paper from a fresh package. Note: Paper absorbs moisture due to high humidity. Store paper in its original wrapper until you are ready to use it. 2 Print the document. Is the print mottled?	Go to step 5.	The problem is solved.

ACTION	YES	NO
Step 5 1 Remove the color imaging kit, and then remove the black imaging unit. **Warning—Potential Damage:** Do not expose the color imaging kit and black imaging unit to direct light for more than 10 minutes. Extended exposure to light may cause print quality problems. **Warning:** Do not touch the photoconductor drum under the color imaging kit and black imaging unit. Doing so may affect the quality of future print jobs. 2 Insert the black imaging unit, and then insert the color imaging kit. 3 Print the document. Is the print mottled?	Contact Contacting Customer Support	The problem is solved.

Paper Curl

ACTION	YES	NO
Step 1 1 Adjust the guides in the tray to the correct position for the paper 2 Print the document. Is the paper curled?	Go to step 2.	The problem is solved.
Step 2 1 Depending on your operating system, specify the paper type from the Printing Preferences or Print dialog. Note: Make sure that the settings matches the paper loaded in the tray. Note: You can also change the settings on the printer control panel. Navigate to: **Settings > Paper > Tray Configuration > Paper Size/Type**. 2 Print the document. Is the paper curled?	Go to step 3.	The problem is solved.

ACTION	YES	NO
Step 3 Print on the other side of the paper. 1 Remove paper, flip it over, and then reload paper. 2 Print the document. Is the paper curled?	Go to step 4.	The problem is solved.
Step 4 1 Load paper from a fresh package. Note: Paper absorbs moisture due to high humidity. Store paper in its original wrapper until you are ready to use it. 2 Print the document. Is the paper curled?	Contact Contacting Customer Support	The problem is solved.

Print Crooked or Skewed

Note: Before solving the problem, print the Print Quality Test Pages. From the control panel, navigate to **Settings > Troubleshooting > Print Quality Test Pages**. For non-touch-screen printer models, press **OK** to navigate through the settings.

ACTION	YES	NO
Step 1 1 Pull out the tray. 2 Remove the paper, and then load paper from a fresh package. Note: Paper absorbs moisture due to high humidity. Store paper in its original wrapper until you are ready to use it. 3 Adjust the paper guides in the tray to the correct position for the paper loaded. 4 Insert the tray. 5 Print the document. Is the print crooked or skewed?	Go to step 2.	The problem is solved.
Step 2 1 Make sure that you are printing on a supported paper. 2 Print the document. Is the print crooked or skewed?	Contact Contacting Customer Support	The problem is solved.

Solid Color or Black Images

Note: Before solving the problem, print the Print Quality Test Pages. From the control panel, navigate to **Settings > Troubleshooting > Print Quality Test Pages**. For non-touch-screen printer models, press **OK** to navigate through the settings.

ACTION	YES	NO
1 Remove the color imaging kit, and then remove the black imaging unit. **Warning—Potential Damage:** Do not expose the color imaging kit and black imaging unit to direct light for more than 10 minutes. Extended exposure to light may cause print quality problems. **Warning:** Do not touch the photoconductor drum under the color imaging kit and black imaging unit. Doing so may affect the quality of future print jobs. 2 Insert the black imaging unit, and then insert the color imaging kit. 3 Print the document.	Contact Contacting Customer Support	The problem is solved.

Text or Images Cut Off

Note: Before solving the problem, print the Print Quality Test Pages. From the control panel, navigate to **Settings > Troubleshooting > Print Quality Test Pages**. For non-touch-screen printer models, press **OK** to navigate through the settings.

ACTION	YES	NO
Step 1 1 Adjust the paper guides in the tray to the correct position for the paper loaded. 2 Print the document. Is the text or image clipped?	Go to step 2.	The problem is solved.
Step 2 1 Depending on your operating system, specify the paper type from the Printing Preferences or Print dialog. Note: Make sure that the settings matches the paper loaded in the tray. Note: You can also change the settings on the printer control panel. Navigate to: **Settings > Paper > Tray Configuration > Paper Size/Type**. 2 Print the document.	Go to step 3.	The problem is solved.
Step 3 1 Remove the color imaging kit, and then remove the black imaging unit. **Warning—Potential Damage:** Do not expose the color imaging kit and black imaging unit to direct light for more than 10 minutes. Extended exposure to light may cause print quality problems. **Warning:** Do not touch the photoconductor drum under the color	Contact Contacting Customer Support	The problem is solved.

ACTION	YES	NO
imaging kit and black imaging unit. Doing so may affect the quality of future print jobs. 2 Insert the black imaging unit, and then insert the color imaging kit. 3 Print the document. Is the text or image clipped?		

Toner Easily Rubs Off

Note: Before solving the problem, print the Print Quality Test Pages. From the control panel, navigate to **Settings > Troubleshooting > Print Quality Test Pages**. For non-touch-screen printer models, press **OK** to navigate through the settings.

ACTION	YES	NO
1 Depending on your operating system, specify the paper type from the Printing Preferences or Print dialog. Note: Make sure that the settings matches the paper loaded in the tray. Note: You can also change the settings on the printer control panel. Navigate to: **Settings > Paper > Tray Configuration > Paper Size/Type**. 2 Print the document. Does the toner rub off?	The problem is solved.	Contact Contacting Customer Support

Uneven Print Density

Note: Before solving the problem, print the Print Quality Test Pages. From the control panel, navigate to **Settings > Troubleshooting > Print Quality Test Pages**. For non-touch-screen printer models, press **OK** to navigate through the settings.

ACTION	YES	NO
1 Remove the color imaging kit, and then remove the black imaging unit. **Warning—Potential Damage:** Do not expose the color imaging kit and black imaging unit to direct light for more than 10 minutes. Extended exposure to light may cause print quality problems. **Warning:** Do not touch the photoconductor drum under the color imaging kit and black imaging unit. Doing so may affect the quality of future print jobs. 2 Insert the black imaging unit, and then insert the color imaging kit. 3 Print the document. Is the print density uneven?	Contact Contacting Customer Support	The problem is solved.

Horizontal Dark Lines

- Before solving the problem, print the Print Quality Test Pages. From the control panel, navigate to **Settings > Troubleshooting > Print Quality Test Pages**. For non-touch-screen printer models, press **OK** to navigate through the settings.
- If horizontal dark lines keep appearing on the prints, then see the “Repeating defects” topic.

ACTION	YES	NO
Step 1 1 Depending on your operating system, specify the paper type from the Printing Preferences or Print dialog. Note: Make sure that the settings matches the paper loaded in the tray. Note: You can also change the settings on the printer control panel. Navigate to: **Settings > Paper > Tray Configuration > Paper Size/Type**. 2 Print the document. Do horizontal dark lines appear on prints?	Go to step 2.	The problem is solved.
Step 2 1 Load paper from a fresh package. Note: Paper absorbs moisture due to high humidity. Store paper in its original wrapper until you are ready to use it. 2 Print the document. Do horizontal dark lines appear on prints?	Go to step 3.	The problem is solved.
Step 3 1 Remove the color imaging kit, and then remove the black imaging unit. **Warning—Potential Damage:** Do not expose the color imaging kit and black imaging unit to direct light for more than 10 minutes.	Contact Contacting Customer Support	The problem is solved.

ACTION	YES	NO
Extended exposure to light may cause print quality problems. **Warning:** Do not touch the photoconductor drum under the color imaging kit and black imaging unit. Doing so may affect the quality of future print jobs. 2 Insert the black imaging unit, and then insert the color imaging kit. 3 Print the document. Do horizontal dark lines appear on prints?		

Vertical Dark Lines

Note: Before solving the problem, print the Print Quality Test Pages. From the control panel, navigate to **Settings > Troubleshooting > Print Quality Test Pages**. For non-touch-screen printer models, press **OK** to navigate through the settings.

ACTION	YES	NO
Step 1 1 Depending on your operating system, specify the paper type from the Printing Preferences or Print dialog. Note: Make sure that the settings matches the paper loaded in the tray. Note: You can also change the settings on the printer control panel. Navigate to: **Settings > Paper > Tray Configuration > Paper Size/Type**. 2 Print the document. Do vertical dark lines appear on prints?	Go to step 2.	The problem is solved.
Step 2 1 Load paper from a fresh package. Note: Paper absorbs moisture due to high humidity. Store paper in its original wrapper until you are ready to use it. 2 Print the document. Do vertical dark lines appear on prints?	Go to step 3.	The problem is solved.
Step 3 1 Remove the color imaging kit, and then remove the black imaging unit. **Warning—Potential Damage:** Do not expose the color imaging kit and black imaging unit to direct light for more than 10 minutes.	Contact Contacting Customer Support	The problem is solved.

ACTION	YES	NO
Extended exposure to light may cause print quality problems. **Warning:** Do not touch the photoconductor drum under the color imaging kit and black imaging unit. Doing so may affect the quality of future print jobs. 2 Insert the black imaging unit, and then insert the color imaging kit. 3 Print the document. Do vertical dark lines appear on prints?		

Horizontal White Lines

- Before solving the problem, print the Print Quality Test Pages. From the control panel, navigate to **Settings > Troubleshooting > Print Quality Test Pages**. For non-touch-screen printer models, press **OK** to navigate through the settings.
- If horizontal white lines keep appearing on your prints, then see the “Repeating defects” topic.

ACTION	YES	NO
Step 1 1 Depending on your operating system, specify the paper type from the Printing Preferences or Print dialog. Note: Make sure that the settings matches the paper loaded in the tray. Note: You can also change the settings on the printer control panel. Navigate to: **Settings > Paper > Tray Configuration > Paper Size/Type**. 2 Print the document. Do horizontal white lines appear on prints?	Go to step 2.	The problem is solved.
Step 2 1 Load the specified paper source with the recommended paper 2 Print the document. Do horizontal white lines appear on prints?	Go to step 3.	The problem is solved.
Step 3 1 Remove the color imaging kit, and then remove the black imaging unit. **Warning—Potential Damage:** Do not expose the color imaging kit and black imaging unit to direct light for more than 10 minutes. Extended exposure to light may cause print quality problems.	Contact Contacting Customer Support	The problem is solved.

ACTION	YES	NO
Warning: Do not touch the photoconductor drum under the color imaging kit and black imaging unit. Doing so may affect the quality of future print jobs. 2 Insert the black imaging unit, and then insert the color imaging kit. 3 Print the document. Do horizontal white lines appear on prints?		

Vertical White Lines

Note: Before solving the problem, print the Print Quality Test Pages. From the control panel, navigate to **Settings > Troubleshooting > Print Quality Test Pages**. For non-touch-screen printer models, press **OK** to navigate through the settings.

ACTION	YES	NO
Step 1 1 Depending on your operating system, specify the paper type from the Printing Preferences or Print dialog. Note: Make sure that the settings matches the paper loaded in the tray. Note: You can also change the settings on the printer control panel. Navigate to: **Settings > Paper > Tray Configuration > Paper Size/Type**. 2 Print the document. Do vertical white lines appear on prints?	Go to step 2.	The problem is solved.
Step 2 Make sure you are using the recommended paper type. 1 Load the specified paper source with the recommended paper 2 Print the document. Do vertical white lines appear on prints?	Go to step 3.	The problem is solved.
Step 3 1 Remove the color imaging kit, and then remove the black imaging unit. **Warning—Potential Damage:** Do not expose the color imaging kit and black imaging unit to direct light for more than 10 minutes. Extended exposure to light may cause print quality problems.	Contact Contacting Customer Support	The problem is solved.

ACTION	YES	NO
Warning: Do not touch the photoconductor drum under the color imaging kit and black imaging unit. Doing so may affect the quality of future print jobs. 2 Insert the black imaging unit, and then insert the color imaging kit. 3 Print the document. Do vertical white lines appear on prints?		

Repeating Defects

Note: Before solving the problem, print the Print Quality Test Pages. From the control panel, navigate to **Settings > Troubleshooting > Print Quality Test Pages**. For non-touch-screen printer models, press **OK** to navigate through the settings.

ACTION	YES	NO
Step 1 Determine how many colors have defects. Is only one color affected?	Go to step 2.	Go to step 3.
Step 2 1 Using the Maintenance Defect Ruler, measure the distance between the repeating defects on the affected color page. 2 Replace the supply item that matches the measurement on the affected color page. **Color imaging kit or black imaging unit** • 94.5 mm (3.72 in.) • 29.9 mm (1.18 in.) • 23.2 mm (0.91 in.) **Developer unit** • 43.6 mm (1.72 in.) • 45.0 mm (1.77 in.) 3 Print the Print Quality Test Pages. Do the defects still appear?	Take note of the distance, and then contact Contacting Customer Support or your service representative.	The problem is solved.
Step 3 1 Using the Maintenance Defect Ruler, measure the distance between the repeating defects on the affected color page. 2 Replace the supply item that matches the measurement on the affected color page. **Transfer module** • 37.7 mm (1.48 in.) • 78.5 mm (3.09 in.) • 54.6 mm (2.15 in.) **Fuser** • 95 mm (3.74 in.) • 110 mm (4.33 in.)	Take note of the distance, and then contact Contacting Customer Support or your service representative.	The problem is solved.

ACTION	YES	NO
3 Print the Print Quality Test Pages. Do the defects still appear?		

PRINT JOBS DO NOT PRINT

ACTION	YES	NO
Step 1 a. From the document you are trying to print, open the Print dialog, and then check if you have selected the correct printer. b. Print the document. Is the document printed?	The problem is solved.	Go to step 2.
Step 2 a. Check if the printer is on. b. Resolve any error messages that appear on the display. c. Print the document. Is the document printed?	The problem is solved.	Go to step 3.
Step 3 a. Check if the ports are working and if the cables are securely connected to the computer and the printer. For more information, see the setup documentation that came with the printer. b. Print the document. Is the document printed?	The problem is solved.	Go to step 4.

ACTION	YES	NO
Step 4 a. Turn off the printer, wait for about 10 seconds, and then turn on the printer. b. Print the document. Is the document printed?	The problem is solved.	Go to step 5.
Step 5 a. Remove, and then reinstall the print driver. b. Print the document. Is the document printed?	The problem is solved.	Refer to Contacting Customer Support.

SLOW PRINTING

ACTION	YES	NO
Step 1 Make sure that the printer cable is securely connected to the printer and to the computer, print server, option, or other network device. Is the printer printing slow?	Go to step 2.	The problem is solved.
Step 2 a. Make sure that the printer is not in Quiet Mode. • From the control panel, navigate to: **Settings > Device > Maintenance > Config Menu > Device Operations > Quiet Mode**. For non-touch-screen printer models, press **OK** to navigate through the settings. b. Print the document. Is the printer printing slow?	Go to step 3.	The problem is solved.
Step 3 a. Depending on your operating system, specify the print resolution from the Printing Preferences or Print dialog.	Go to step 4.	The problem is solved.

ACTION	YES	NO
b. Set the resolution to 4800 CQ. c. Print the document. Is the printer printing slow?		
Step 4 a. Depending on your operating system, specify the paper type from the Printing Preferences or Print dialog. Note: Make sure that the settings matches the paper loaded in the tray. Note: You can also change the settings on the printer control panel. Navigate to: **Settings > Paper > Tray Configuration > Paper Size/Type**. Note: Heavier paper prints more slowly. Note: Paper narrower than letter, A4, and legal may print more slowly. • Make sure that the setting matches the paper loaded. • You can also change the setting on the printer control panel. Navigate to **Settings > Paper > Tray Configuration > Paper Size/Type**. For non-touch-screen printer models, press **OK** to navigate through the settings. • Heavier paper prints more slowly. • Paper narrower than letter, A4, and legal may print more slowly. b. Print the document.	Go to step 5.	The problem is solved.

ACTION	YES	NO
Is the printer printing slow?		
Step 5 a. Make sure that the printer settings for texture and weight match the paper being loaded. From the control panel, navigate to: **Settings > Paper > Media Configuration > Media Types** For non-touch-screen printer models, press **OK** to navigate through the settings. Note: Rough paper texture and heavy paper weight may print more slowly. b. Print the document. Is the printer printing slow?	Go to step 6.	The problem is solved.
Step 6 Remove held jobs. Is the printer printing slow?	Go to step 7.	The problem is solved.
Step 7 a. Make sure that the printer is not overheating. • Allow the printer to cool down after a long print job. • Observe the recommended ambient temperature for the printer. For more information, see Selecting a Location for the Printer. b. Print the document. Is the printer printing slow?	Refer to Contacting Customer Support.	The problem is solved.

JOB PRINTS FROM THE WRONG TRAY OR ON THE WRONG PAPER

ACTION	YES	NO
Step 1 a. Check if you are printing on the correct paper. b. Print the document. Is the document printed on the correct paper?	Go to step 2.	Load the correct paper size and paper type.
Step 2 a. Depending on your operating system, specify the paper size and paper type from the Printing Preferences or Print dialog. Note: You can also change the settings on the printer control panel. Navigate to: **Settings > Paper > Tray Configuration > Paper Size/Type**. For non-touch-screen printer models, press **OK** to navigate through the settings. b. Make sure that the settings match the paper loaded. c. Print the document. Is the document printed on the correct paper?	The problem is solved.	Go to step 3.
Step 3 1 Check if the trays are linked. For more information, see Linking trays 2 Print the document. Is the document printed from the correct tray?	The problem is solved.	Refer to Contacting Customer Support

The Printer is not Responding

ACTION	YES	NO
Step 1 Check if the power cord is connected to the electrical outlet. **CAUTION—POTENTIAL INJURY:** To avoid the risk of fire or electrical shock, connect the power cord to an appropriately rated and properly grounded electrical outlet that is near the product and easily accessible. Is the printer responding?	The problem is solved.	Go to step 2.
Step 2 Check if the electrical outlet is turned off by a switch or breaker. Is the electrical outlet turned off by a switch or breaker?	Turn on the switch or reset the breaker.	Go to step 3.
Step 3 Check if the printer is on. Is the printer on?	Go to step 4.	Turn on the printer.
Step 4 Check if the printer is in Sleep or Hibernate mode. Is the printer in Sleep or Hibernate mode?	Press the power button to wake the printer.	Go to step 5.
Step 5 Check if the cables connecting the printer and the computer are inserted to the correct ports. Are the cables inserted to the correct ports?	Go to step 6.	Insert the cables to the correct ports.
Step 6 Turn off the printer, install the	The problem is solved.	Go to step 7.

ACTION	YES	NO
hardware options, and then turn on the printer. For more information, see the documentation that came with the option. Is the printer responding?		
Step 7 Install the correct print driver. Is the printer responding?	The problem is solved.	Go to step 8.
Step 8 Turn off the printer, wait for about 10 seconds, and then turn on the printer. Is the printer responding?	The problem is solved.	Refer to Contacting Customer Support.

Network Connection Problems

CANNOT OPEN EMBEDDED WEB SERVER

ACTION	YES	NO
Step 1 1 Check if the printer is on. 2 Access the printer Embedded Web Server (EWS). Can you open the EWS?	The problem is solved.	Go to step 2.
Step 2 1 Make sure that the printer IP address is correct. • View the IP address on the home screen. • An IP address appears as four sets of numbers separated by periods, such as 123.123.123.123. 2 Access the EWS. Can you open the EWS?	The problem is solved.	Go to step 3.
Step 3 1 Check if you are using a supported browser: • Internet Explorer version 11 or later • Microsoft Edge • Safari version 6 or later • Google Chrome™ version 32 or later • Mozilla Firefox version 24 or later 2 Access the EWS. Can you open the EWS?	The problem is solved.	Go to step 4.
Step 4 1 Check if the network connection is working. Note: If the connection is not working, then contact your administrator.	The problem is solved.	Go to step 5.

ACTION	YES	NO
2 Access the EWS. Can you open the EWS?		
Step 5 1 Make sure that the cable connections to the printer and print server are secure. For more information, see the documentation that came with the print server. 2 Access the EWS. Can you open the EWS?	The problem is solved.	Go to step 6.
Step 6 1 Check if the web proxy servers are disabled. Note: If the servers are disabled, then contact your administrator. 2 Access the EWS. Can you open the EWS?	The problem is solved.	Refer to Contacting Customer Support.

CANNOT CONNECT THE PRINTER TO THE WI-FI NETWORK

Note: This feature is available only in some printer models.

ACTION	YES	NO
Step 1 Make sure that Active Adapter is set to Auto. From the control panel, navigate to: **Settings > Network/Ports > Network Overview > Active Adapter > Auto** For non-touch-screen printer models, press **OK** to navigate through the settings. Can the printer connect to the Wi-Fi network?	The problem is solved.	Go to step 2.
Step 2 Check if the correct Wi-Fi network is	Go to step 4.	Go to step 3.

ACTION	YES	NO
selected. Note: Some routers may share the default SSID. Are you connecting to the correct Wi-Fi network?		
Step 3 Connect to the correct Wi-Fi network. For more information, see Connecting the Printer to a Wi-Fi Network. Can the printer connect to the Wi-Fi network?	The problem is solved.	Go to step 4.
Step 4 Check the wireless security mode. From the control panel, navigate to: **Settings > Network/Ports > Wireless > Wireless Security Mode**. For non-touch-screen printer models, press **OK** to navigate through the settings. Is the correct wireless security mode selected?	Go to step 6.	Go to step 5.
Step 5 Select the correct wireless security mode. Can the printer connect to the Wi-Fi network?	The problem is solved.	Go to step 6.
Step 6 Make sure that you entered the correct network password. Note: Take note of the spaces, numbers, and capitalization in the password. Can the printer connect to the Wi-Fi network?	The problem is solved.	Contact Contacting Customer Support.

Issues with Supplies

REPLACE CARTRIDGE PRINTER REGION MISMATCH

There is a mismatch error between the printer region and the cartridge region. To correct this problem, purchase a cartridge with the correct region that matches the printer region, or purchase a worldwide cartridge.

To locate the region settings of the printer and print cartridge, print the Print Quality Test Pages. From the control panel, navigate to: **Settings > Troubleshooting > Print Quality Test Pages**.

- The first number in the message after 42 indicates the region of the printer.
- The second number in the message after 42 indicates the region of the cartridge.

Printer and print cartridge regions

REGION	NUMERIC CODE
Worldwide or Undefined region	0
North America (United States, Canada)	1
European Economic Area, Western Europe, Nordic countries, Switzerland	2
Asia Pacific	3
Latin America	4
Rest of Europe, Middle East, Africa	5
Australia, New Zealand	6
Invalid region	9

Note: To find the region settings of the printer and toner cartridge, print the print quality test pages. From the control panel, navigate to: **Settings > Troubleshooting > Print Quality Test Pages**

NON-XEROX SUPPLIES

The printer has detected a non-Xerox supply installed in the printer.

Your Xerox printer is designed to function best with genuine Xerox supplies. Use of third-party supplies can affect the performance, reliability, or life of the printer and its imaging components.

All life indicators are designed to function with Xerox supplies and can deliver unpredictable results if third-party supplies are used. Imaging component usage beyond the intended life may damage your Xerox printer or associated components.

> **Warning—Potential Damage:** Use of third-party supplies or parts can affect warranty coverage. Damage caused by the use of third-party supplies or parts may not be covered by the warranty.

To accept any and all of these risks and to proceed with the use of non-genuine supplies or parts in your printer, touch and hold the error message on the display using two fingers for 15 seconds. When a confirmation dialog box appears, touch **Continue**.

If you do not want to accept these risks, then remove the third-party supply or part from your printer and install a genuine Xerox supply or part. For more information, refer to Using Genuine Xerox Supplies.

If the printer does not print after clearing the error message, then reset the supply usage counter.

1. From the control panel, navigate to**Settings > Device > Maintenance > Configuration Menu > Supply Usage and Counters.**
2. Select the part or supply that you want to reset, and then touch **Start**.
3. Read the warning message, and then touch **Continue**.
4. Using two fingers, touch the display for 15 seconds to clear the message.

Note: If you are unable to reset the supply usage counters, then return the supply item to the place of purchase.

Clearing Jams

AVOIDING JAMS

Load Paper Properly

- Make sure that the paper lies flat in the tray.

CORRECT LOADING OF PAPER	INCORRECT LOADING OF PAPER
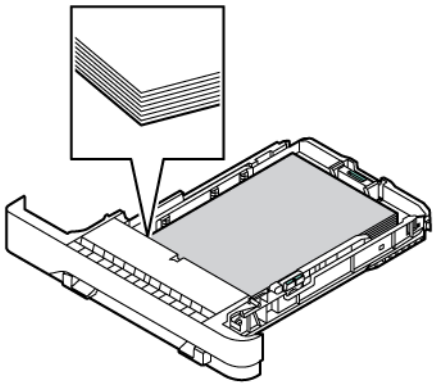	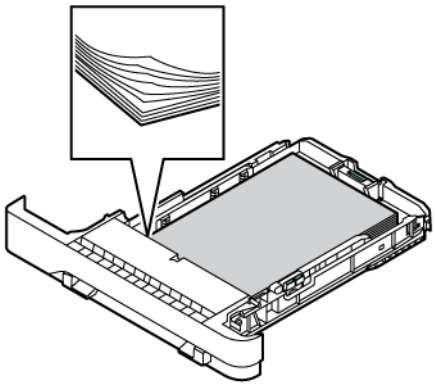

- Do not load or remove a tray while the printer is printing.
- Do not load too much paper. Make sure that the stack height is below the maximum paper fill indicator.
- Do not slide paper into the tray. Load paper as shown in the illustration.

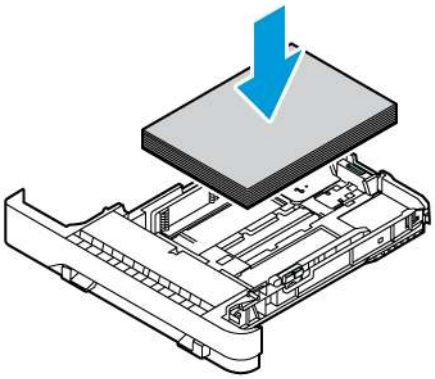

- Make sure that the paper guides are positioned correctly and are not pressing tightly against the paper or envelopes.
- Push the tray firmly into the printer after loading paper.

Use Recommended Paper

- Use only recommended paper or specialty media.
- Do not load paper that is wrinkled, creased, damp, bent, or curled.

- Flex, fan, and align the paper edges before loading.

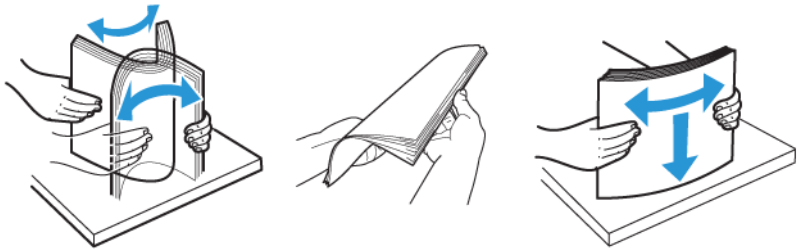

- Do not use paper that has been cut or trimmed by hand.
- Do not mix paper sizes, weights, or types in the same tray.
- Make sure that the paper size and type are set correctly on the computer or printer control panel.
- Store paper according to manufacturer recommendations.

IDENTIFYING JAM LOCATIONS

- When Jam Assist is set to **On**, the printer might attempt to flush blank pages or pages with partial prints after a jammed page has been cleared. Check your printed output for blank pages.
- When Jam Recovery is set to **On** or **Auto**, the printer reprints jammed pages.

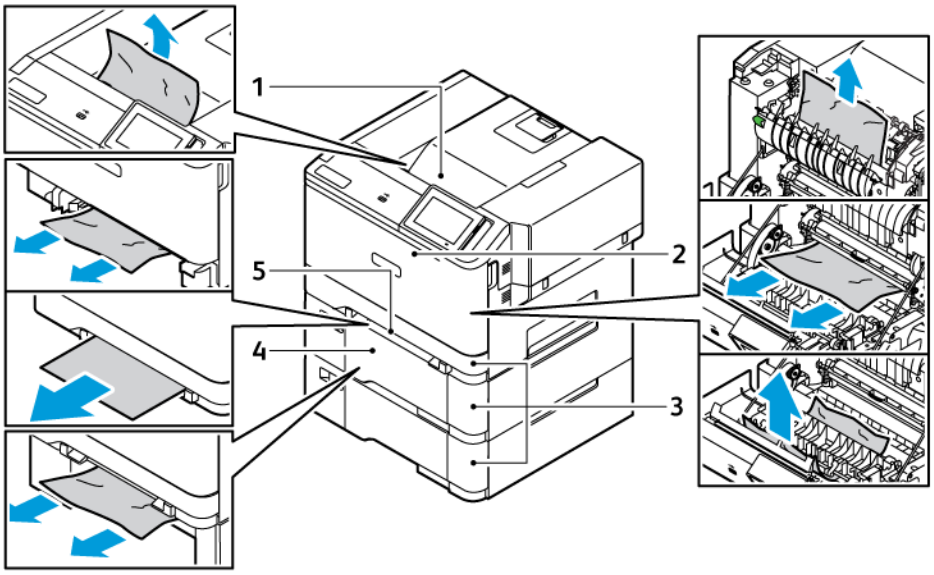

1. Standard Output Tray
2. Door A
3. Standard 250-sheet Tray and Optional 550-sheet Trays
4. Multipurpose Feeder
5. Manual Feeder

PAPER JAM IN THE STANDARD TRAY

1. Remove the tray and the manual feeder.

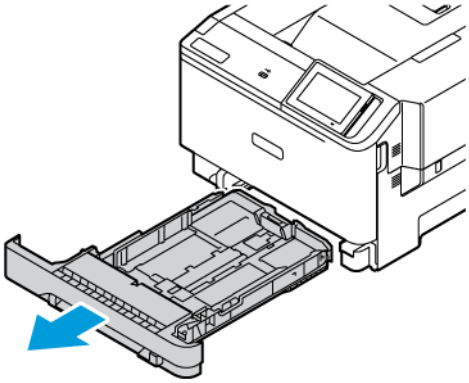

2. Remove the jammed paper.

Note: Make sure that all paper fragments are removed.

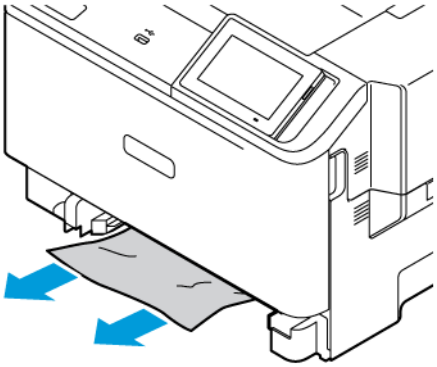

3. Insert the manual feeder and the tray.

PAPER JAM IN THE STANDARD OUTPUT TRAY

Remove the jammed paper.

Note: Make sure that all paper fragments are removed.

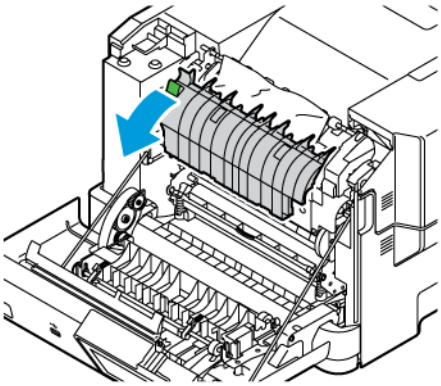

PAPER JAM IN THE MANUAL FEEDER

1. Remove the tray and the manual feeder.

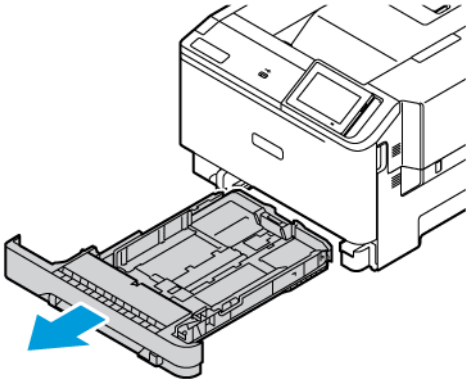

2. Remove the jammed paper.

Note: Make sure that all paper fragments are removed.

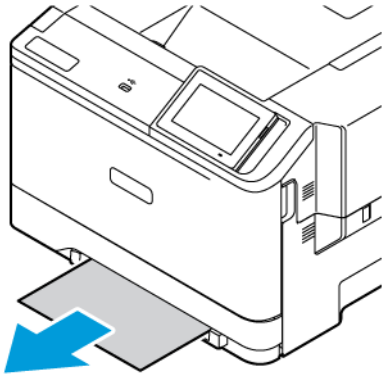

3. Insert the manual feeder and the tray.

PAPER JAM IN DOOR A

1. Open Door A.

CAUTION—HOT SURFACE: The inside of the printer might be hot. To reduce the risk of injury from a hot component, allow the surface to cool before touching it.

Warning—Potential Damage: To prevent damage from electrostatic discharge, touch any exposed metal frame of the printer before accessing or touching interior areas of the printer.

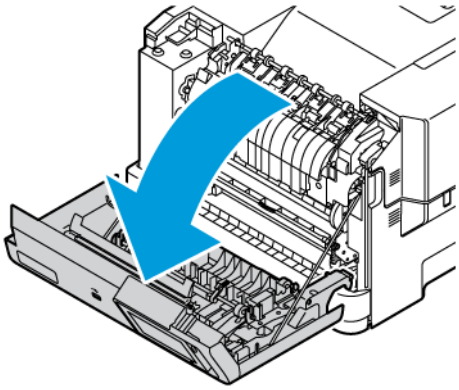

2. Remove the jammed paper from any of the following areas:

Note: Make sure that all paper fragments are removed.

- Fuser area

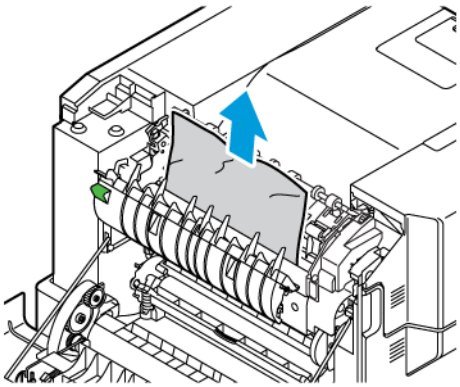

- Below the fuser area

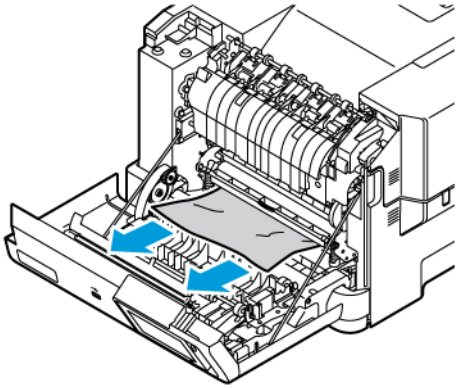

- Duplex unit

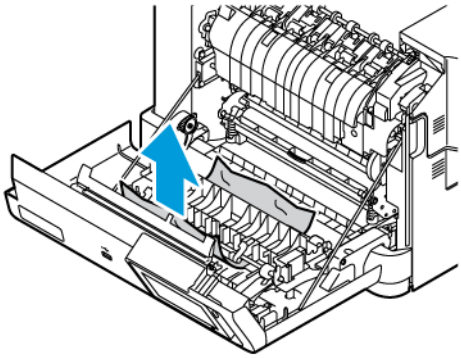

3. Close Door A.

Paper Feed Problems

ENVELOPE SEALS WHEN PRINTING

ACTION	YES	NO
Step 1 a. Use an envelope that has been stored in a dry environment Note: Printing on envelopes with high moisture content can seal the flaps. b. Send the print job. Does the envelope seal when printing?	Go to step 2.	The problem is solved.
Step 2 a. Make sure that paper type is set to Envelope. From the control panel, navigate to: **Settings > Paper > Tray Configuration > Paper Size/ Type**. For non-touch-screen printer models, press **OK** to navigate through the settings. b. Send the print job. Does the envelope seal when printing?	Refer to Contacting Customer Support.	The problem is solved.

COLLATED PRINTING DOES NOT WORK

ACTION	YES	NO
Step 1 a. From the control panel, navigate to: **Settings > Print > Layout > Collate**. For non-touch-screen printer models, press **OK** to navigate through the settings. b. Select **On [1,2,1,2,1,2]**. c. Print the document. Is the document collated correctly?	The problem is solved.	Go to step 2.
Step 2 a. From the document that you are trying to print, open the Print dialog, and then select **Collate**. b. Print the document. Is the document collated correctly?	The problem is solved.	Go to step 3.
Step 3 a. Reduce the number of pages to print. b. Print the document. Are the pages collated correctly?	The problem is solved.	Refer to Contacting Customer Support.

PAPER FREQUENTLY JAMS

ACTION	YES	NO
Step 1 a. Remove the tray. b. Check if paper is loaded correctly. • Make sure that the paper guides are positioned correctly. • Make sure that the stack height is below the maximum paper fill indicator. • Make sure to print on recommended paper size and type. c. Insert the tray. d. Print the document. Do paper jams occur frequently?	Go to step 2.	The problem is solved.
Step 2 a. From the control panel, navigate to: **Settings > Paper > Tray Configuration > Paper Size/ Type**. For non-touch-screen printer models, press **OK** to navigate through the settings. b. Set the correct paper size and type. c. Print the document. Do paper jams occur frequently?	Go to step 3.	The problem is solved.
Step 3 a. Load paper from a fresh package. Note: Paper absorbs moisture due to high humidity. Store paper in its original wrapper until you are ready to use it. b. Print the document. Do paper jams occur frequently?	Refer to Contacting Customer Support.	The problem is solved.

JAMMED PAGES ARE NOT REPRINTED

ACTION	YES	NO
1 From the control panel, navigate to: **Settings > Device > Notifications > Jam Content Recovery**. For non-touch-screen printer models, press **OK** to navigate through the settings. 2 In the Jam Recovery menu, select **On** or **Auto**. 3 Print the document. Are the jammed pages reprinted?	The problem is solved.	ContactContacting Customer Support.

Color Quality Problems

MODIFYING THE COLORS IN PRINTED OUTPUT

For non-touch-screen printer models, press **OK** to navigate through the settings.

1. From the control panel, navigate to:

   Settings > Print > Quality > Advanced Imaging > Color Correction

2. From the Color Correction menu, select **Manual > Color Correction Content**.
3. Choose the appropriate color conversion setting.

OBJECT TYPE	COLOR CONVERSION TABLES
RGB Image RGB Text RGB Graphics	• Vivid—Produces brighter, more saturated colors and may be applied to all incoming color formats. • sRGB Display—Produces an output that approximates the colors displayed on a computer monitor. Black toner usage is optimized for printing photographs. • Display-True Black—Produces an output that approximates the colors displayed on a computer monitor. This setting uses only black toner to create all levels of neutral gray. • sRGB Vivid—Provides an increased color saturation for the sRGB Display color correction. Black toner usage is optimized for printing business graphics. • Off
CMYK Image CMYK Text CMYK Graphics	• US CMYK—Applies color correction to approximate the Specifications for Web Offset Publishing (SWOP) color output. • Euro CMYK—Applies color correction to approximate Euroscale color output. • Vivid CMYK—Increases the color saturation of the US CMYK color correction setting. • Off

FAQ ABOUT COLOR PRINTING

What is RGB color?

RGB color is a method of describing colors by indicating the amount of red, green, or blue used to produce a certain color. Red, green, and blue light can be added in various amounts to produce a large range of colors observed in nature. Computer screens, scanners, and digital cameras use this method to display colors.

What is CMYK color?

CMYK color is a method of describing colors by indicating the amount of cyan, magenta, yellow, and black used to reproduce a particular color. Cyan, magenta, yellow, and black inks or toners can be printed in various amounts to produce a large range of colors observed in nature. Printing presses, inkjet printers, and color laser printers create colors in this manner.

How is color specified in a document to be printed?

Software programs are used to specify and modify the document color using RGB or CMYK color combinations. For more information, see the software program Help topics.

How does the printer know what color to print?

When printing a document, information describing the type and color of each object is sent to the printer and is passed through color conversion tables. Color is translated into the appropriate amounts of cyan, magenta, yellow, and black toner used to produce the color you want. The object information determines the application of color conversion tables. For example, it is possible to apply one type of color conversion table to text while applying a different color conversion table to photographic images.

What is manual color correction?

When manual color correction is enabled, the printer employs user-selected color conversion tables to process objects. Manual color correction settings are specific to the type of object being printed (text, graphics, or images). It is also specific to how the color of the object is specified in the software program (RGB or CMYK combinations). To apply a different color conversion table manually, see Modifying the Colors in Printed Output.

If the software program does not specify colors with RGB or CMYK combinations, then manual color correction is not useful. It is also not effective if the software program or the computer operating system controls the adjustment of colors. In most situations, setting the Color Correction to Auto generates preferred colors for the documents.

How can I match a particular color (such as a corporate logo)?

From the printer Quality menu, nine types of Color Samples sets are available. These sets are also available from the Color Samples page of the Embedded Web Server. Selecting any sample set generates multiple-page prints consisting of hundreds of colored boxes. Each box contains a CMYK or RGB combination, depending on the table selected. The observed color of each box is obtained by passing the CMYK or RGB combination labeled on the box through the selected color conversion table.

By examining Color Samples sets, you can identify the box with color closest to the color being matched. The color combination labeled on the box can then be used for modifying the color of the object in a software program. For more information, see the software program Help topics. Manual color correction may be necessary to use the selected color conversion table for the particular object.

Selecting which Color Samples set to use for a particular color-matching problem depends on:

- The Color Correction setting being used (Auto, Off, or Manual)
- The type of object being printed (text, graphics, or images)
- How the color of the object is specified in the software program (RGB or CMYK combinations)

If the software program does not specify colors with RGB or CMYK combinations, then the Color Samples pages are

not useful. Additionally, some software programs adjust the RGB or CMYK combinations specified in the program through color management. In these situations, the printed color may not be an exact match of the Color Samples pages.

THE PRINT APPEARS TINTED

ACTION	YES	NO
Step 1 Perform Color Adjust. a. From the control panel, navigate to: **Settings > Print > Quality > Advanced Imaging > Color Adjust**. For non-touch-screen printer models, press **OK** to navigate through the settings. b. Print the document. Does the print appear tinted?	Go to step 2.	The problem is solved.
Step 2 Perform Color Balance. a. From the control panel, navigate to: **Settings > Print > Quality > Advanced Imaging > Color Balance**. For non-touch-screen printer models, press **OK** to navigate through the settings. b. Adjust the settings. c. Print the document. Does the print appear tinted?	Refer to Contacting Customer Support.	The problem is solved.

Contacting Customer Support

To access the Customer Support Center phone numbers, go to https://www.xerox.com/office/worldcontacts. Before contacting customer support, make sure to have the following information:

- Printer problem
- Error message
- Printer model type and serial number

To access customer support, search through the Knowledgebase, browse through user documentation, or download printer software, go to https://support.xerox.com, and enter your product into the Search field.

Regulatory Information

This appendix contains:

Basic Regulations 246
Safety Certification 253
Material Safety Data Sheets 254

Basic Regulations

Xerox has tested this printer to electromagnetic emission and immunity standards. These standards are designed to mitigate interference caused or received by this printer in a typical office environment.

Changes or modifications to this device not specifically approved by Xerox® Corporation can void the authority of the user to operate this equipment.

UNITED STATES FCC REGULATIONS

This equipment has been tested and found to comply with the limits for a Class A digital device, pursuant to Part 15 of the Federal Communications Commission (FCC) Rules. These limits are designed to provide reasonable protection against harmful interference when the equipment is operated in a commercial environment. This equipment generates, uses, and can radiate radio frequency energy. If the equipment is not installed and used in accordance with the instruction manual, it may cause harmful interference to radio communications. Operation of this equipment in a residential area is likely to cause harmful interference. Users are required to correct the interference at their own expense.

Changes or modifications to this equipment not approved by Xerox can void the authority of the user to operate this equipment.

To maintain compliance with FCC regulations, shielded cables must be used with this equipment. Operation with non-approved equipment or unshielded cables is likely to result in interference to radio and TV reception.

Warning: To ensure compliance with Part 15 of the FCC rules, use shielded interface cables.

Xerox® C410 Color Printers

Xerox® C410 Color Printers comply with Part 15 of the FCC rules. Operation is subject to the following two conditions:

- The devices are not used to cause harmful interference.
- The devices must accept any interference received, including any interference that can cause an undesired operation.

Responsible Party: Xerox Corporation

Address: 800 Phillips Road, Webster, NY 14580

Internet contact information: www.xerox.com/en-us/about/ehs.

REGULATORY INFORMATION FOR 2.4-GHZ AND 5-GHZ WIRELESS NETWORK ADAPTERS

This product contains a 2.4-GHz and 5-GHz Wireless LAN radio transmitter module that complies with the requirements specified in FCC Part 15, Industry Canada RSS-210, and European Council Directive 2014/53/EU. Radio Frequency (RF) output power of this device will not exceed 20 dBm in either frequency band.

Operation of this device is subject to the following two conditions:

1. This device may not cause harmful interference, and
2. This device must accept any interference received, including interference that may cause undesired operation.

Changes or modifications to this device not specifically approved by the Xerox Corporation can void the authority of the user to operate this equipment.

LASER NOTICE

The printer is certified in the U.S. to conform to the requirements of DHHS 21 CFR, Chapter I, Subchapter J for Class I (1) laser products, and elsewhere is certified as a Class I laser product conforming to the requirements of IEC 60825-1: 2014.

Class I laser products are not considered to be hazardous. The laser system and printer are designed so there is never any human access to laser radiation above a Class I level during normal operation, user maintenance, or prescribed service conditions. The printer has a non-serviceable printhead assembly that contains a laser with the following specifications:

Class: IIIb (3b) AlGaAs

Nominal output power (milliwatts): 12

Wavelength (nanometers): 770–800

CANADA

This Class A digital apparatus complies with Canadian ICES-003 and ICES-001.

Cet appareil numérique de la classe A est conforme à la norme NMB-003 et NMB-001 du Canada.

This product contains a 2.4-GHz and 5-GHz Wireless LAN radio transmitter module that complies with the requirements specified in Industry Canada RSS-210.

Ce produit contient un module émetteur radio LAN sans fil de 2,4 GHz et 5 GHz conforme aux exigences spécifiées dans la réglementation Industrie du Canada RSS-210.

This device complies with Industry Canada's licence-exempt RSSs. Operation is subject to the following two conditions:

1. This device may not cause interference, and
2. This device must accept any interference, including interference that may cause undesired operation of the device.

Le présent appareil est conforme aux CNR d'Industrie Canada applicables aux appareils radio exempts de licence. L'exploitation est autorisée aux deux conditions suivantes:

1. l'appareil ne doit pas produire de brouillage, et
2. l'utilisateur de l'appareil doit accepter tout brouillage radioélectrique subi, même si le brouillage est susceptible d'en compromettre le fonctionnement.

There are operational restrictions for License-Exempt Local Area Network (LE-LAN) devices: the device for operation in the band 5150-5250 MHz is only for indoor use to reduce the potential for harmful interference to co-channel mobile satellite systems.

Il y a des restrictions opérationnelles pour dispositifs de réseaux locaux exempts de licence (RL-EL): les dispositifs fonctionnant dans la bande 5 150-5 250 MHz sont réservés uniquement pour une utilisation à l'intérieur afin de réduire les risques de brouillage préjudiciable aux systèmes de satellites mobiles utilisant les mêmes canaux.

This transmitter must not be co-located or operating in conjunction with any other antenna or transmitter. This equipment should be installed and operated with a minimum distance of 20 centimeters between the radiator and your body.

Cet émetteur ne doit pas être Co-placé ou ne fonctionnant en même temps qu'aucune autre antenne ou émetteur. Cet équipement devrait être installé et actionné avec une distance minimum de 20 centimètres entre le radiateur et votre corps.

EUROPEAN UNION AND EUROPEAN ECONOMIC AREA COMPLIANCE

CE

The CE mark applied to this product indicates compliance to applicable EU Directives

The full text of the EU Declaration of Conformity is located at www.xerox.com/en-us/about/ehs.

This product contains a 2.4-GHz and 5-GHz Wireless LAN radio transmitter module.

Radio Frequency (RF) output power of this device will not exceed 20 dBm in either frequency band.

Hereby, Xerox declares that the radio equipment models Xerox® C410 Color Printers are in compliance with Directive 2014/53/EU.

This printer, if used properly in accordance with the instructions, is not dangerous for the consumer or for the environment.

Warning:

- Changes or modifications to this equipment not specifically approved by the Xerox Corporation may void the user's authority to operate this equipment.
- External radiation from Industrial, Scientific, and Medical (ISM) equipment can interfere with the operation of this Xerox device. If external radiation from ISM equipment interferes with this device, contact your Xerox representative for assistance.
- This is a class A product. In a domestic environment, this product can cause radio frequency interference, in which case the user can be required to take adequate measures.
- To ensure compliance with European Union regulations, use shielded interface cables.

European Union Lot 4 Imaging Equipment Agreement

Xerox® has agreed to design criteria for energy efficiency and environmental performance of our products that are in scope of the European Union (EU) Energy Related Products Directive, specifically the Lot 4 - Imaging Equipment.

In scope products include Household and Office equipment that meet the following criteria:

- Standard monochrome format products with a maximum speed less than 66 A4 images per minute.
- Standard color format products with a maximum speed less than 51 A4 images per minute.

TO LEARN MORE ABOUT	GO TO
• Power Consumption and Activation Times • Default Energy Saver Settings	*User Documentation* or *Systems Administrators Guide* www.xerox.com/office/C410docs
• Benefits of purchasing ENERGY STAR® qualified products	www.energystar.gov
• Environmental Benefits of Duplex Printing • Benefits of using lighter paper weights (60 g/m^2) and Recyclability • Cartridge disposal and treatment • Xerox participation in sustainability initiatives	www.xerox.com/en-us/about/ehs

ENERGY STAR

The ENERGY STAR program is a voluntary scheme to promote the development and purchase of energy-efficient models, which help to reduce environmental impact. Details on the ENERGY STAR program and models qualified to ENERGY STAR can be found at the following website: www.energystar.gov.

The ENERGY STAR and ENERGY STAR mark are registered United States trademarks.

The ENERGY STAR Imaging Equipment Program is a team effort between United States, European Union, Japanese governments, and the office equipment industry to promote energy-efficient copiers, printers, fax, multifunction printers, personal computers, and monitors. Reducing product energy consumption helps combat smog, acid rain, and long-term changes to the climate by decreasing the emissions that result from generating electricity.

For more information on energy or other related topics, go to www.xerox.com/environment or www.xerox.com/environment_europe.

Power Consumption and Activation Time

The amount of electricity that a device consumes depends on the way the device is used. This device is designed and configured to enable you to reduce your electricity usage.

To reduce energy consumption, your device is configured to use Energy Saver modes. After the last print, the device transitions to Ready mode. In Ready mode, the device can print again immediately. If the device is not used for a specified period, the device transitions to Sleep mode. To reduce power consumption, only essential functions remain active in Sleep mode. The device takes longer to produce the first print after it exits Sleep Mode, than it takes to print in Ready mode. This delay is the result of the printer that wakes up and is typical of most imaging devices on the market.

To save power, you can configure Energy Saver modes. The following options are available:

- **Job Activated**: The device wakes when it detects activity. To set the delay before the device enters Sleep Mode, enter the number of minutes.
- **Sleep and wake up at scheduled times**: The device wakes and sleeps according to a schedule that you specify.
- **Auto Power Off**: To allow the device to power off after a period of time in Sleep Mode, select Auto Power Off. To set the delay before the printer powers off from the Sleep Mode setting, enter the number of hours.

To change the Energy Saver mode settings, refer to the *User Guide* at www.xerox.com/office/C410docs. For further assistance, contact your System Administrator or refer to the *System Administrator Guide*.

To enable Auto Power Off mode, contact your System Administrator. For details, refer to the *System Administrator Guide* at www.xerox.com/office/C410docs.

To learn more about Xerox participation in sustainability initiatives, go to: www.xerox.com/environment or www.xerox.com/environment_europe.

Note: Changing the default Energy Saver activation times can result in an overall higher energy consumption of the device. Before you turn off Energy Saver modes or set a long activation time, consider the increase in device power consumption.

Default Energy Saver Settings

This device is ENERGY STAR®-qualified under the ENERGY STAR Program Requirements for Imaging Equipment. The transition time from Ready mode to Sleep mode can be set from 0–60 or 0–120 minutes, depending on the printer model. The default value is set to 0 minutes. The maximum transition time from Ready mode to Sleep mode can take up to 120 minutes, depending on the printer model and system configuration.

To change the Energy Saver settings, or enable Auto Standby capability, contact your system administrator or refer to *System Administrator Guide* at www.xerox.com/office/C410docs.

EPEAT

This device is registered in the EPEAT directory for meeting the ecolabel properties. Included is the factory defaulted Sleep mode enablement. In Sleep mode the printer uses less than 1 Watt of power.

To learn more about Xerox participation in sustainability initiatives, go to https://www.xerox.com/en-us/about/ehs or www.xerox.co.uk/about-xerox/environment/engb.html.

Environmental Benefits of Duplex Printing

Most Xerox products have duplex printing, also known as 2-sided printing, capability. This enables you to print on both sides of the paper automatically, and therefore helps to reduce the use of valuable resources by reducing your paper consumption. The Lot 4 Imaging Equipment agreement requires that on models greater than or equal to 40 ppm color or greater than or equal to 45 ppm monochrome the duplex function has been auto enabled, during the setup and driver installation. Some Xerox models below these speed bands may also be enabled with 2-sided printing settings defaulted on at the time of install. Continuing to use the duplex function will reduce the environmental impact of your work. However, should you require simplex/1-sided printing, you may change the print settings in the print driver.

Paper Types

This product can be used to print on both recycled and virgin paper, approved to an environmental stewardship scheme, which complies with EN12281 or a similar quality standard. Lighter weight paper (60 g/m^2), which contains less raw material and thus saves resources per print, may be used in certain applications. We encourage you to check if this is suitable for your printing needs.

EURASIAN ECONOMIC COMMUNITY CERTIFICATION

The EAC mark applied to this product indicates certification for use on the markets of the Member States of the Customs Union.

GERMANY

Germany - Blue Angel

RAL, the German Institute for Quality Assurance and Labeling, has awarded the following configuration of this device the Blue Angel Environmental Label:

Network printer with automatic 2-sided printing and USB or network connectivity.

This label distinguishes it as a device that satisfies Blue Angel criteria for environmental acceptability in terms of device design, manufacture, and operation. For more information, go to www.blauer-engel.de.

Blendschutz

Das Gerät ist nicht für die Benutzung im unmittelbaren Gesichtsfeld am Bildschirmarbeitsplatz vorgesehen. Um störende Reflexionen am Bildschirmarbeitsplatz zu vermeiden, darf dieses Produkt nicht im unmittelbaren Gesichtsfeld platziert werden.

Lärmemission

Maschinenlärminformations-Verordnung 3. GPSGV: Der höchste Schalldruckpegel beträgt 70 dB(A) oder weniger gemäß EN ISO 7779.

Importeur

Xerox GmbH

Hellersbergstraße 2-4

41460 Neuss

Deutschland

TURKEY ROHS REGULATION

In compliance with Article 7 (d), we hereby certify “it is in compliance with the EEE regulation.”

“EEE yönetmeliğine uygundur.”

UKRAINE ROHS COMPLIANCE

Обладнання відповідаєвимогам Технічного регламенту щодо обмеження

використання деяких небезпечних речовин в електричному та електронному

обладнані, затвердженого постановою Кабінету Міністрів України від 3 грудня 2008 № 1057

The equipment complies with requirements of the Technical Regulation, approved by the Resolution of Cabinet of Ministry of Ukraine as of December 3, 2008, in terms of restrictions for the use of certain dangerous substances in electrical and electronic equipment.

Safety Certification

This device is compliant with IEC and EN product safety standards certified by a National Regulatory Test Laboratory (NRTL).

Material Safety Data Sheets

For Material Safety Data information regarding your printer, go to:

- Web address: Xerox Safety Documents and Compliance Information
- United States and Canada, only: 1-800-ASK-XEROX (1-800-275-9376)
- Other markets, send an email request to: EHS-Europe@xerox.com

Recycling and Disposal

This appendix contains:

All Countries..... 256
North America..... 257
European Union 258
Other Countries 259

All Countries

If you are managing the disposal of your Xerox product, please note that the printer may contain lead, mercury, perchlorate, and other materials whose disposal may be regulated due to environmental considerations. The presence of these materials is fully consistent with global regulations applicable at the time that the product was placed on the market.

For recycling and disposal information, contact your local authorities.

Perchlorate Material: This product may contain one or more Perchlorate-containing devices, such as batteries. Special handling may apply. For more information, go to www.dtsc.ca.gov/hazardouswaste/perchlorate.

BATTERY REMOVAL

Batteries should only be replaced by a manufacturer-approved service facility.

North America

Xerox operates an equipment take-back and reuse/recycle program. Contact your Xerox representative (1-800-ASK-XEROX) to determine if this Xerox product is part of the program.

For more information about Xerox environmental programs, visit www.xerox.com/environment.

For recycling and disposal information, contact your local authorities.

European Union

These symbols indicate that this product is not to be disposed of with your household waste, according to the Waste Electrical and Electronic Equipment (WEEE) Directive (2012/19/EU), the Battery Directive (2006/66/EC) and national legislation implementing those Directives.

If a chemical symbol is printed beneath the symbol shown above, in accordance with the Battery Directive, this indicates that a heavy metal (Hg = Mercury, Cd = Cadmium, Pb = Lead) is present in this battery or accumulator at a concentration above an applicable threshold specified in the Battery Directive.

Some equipment may be used in both a domestic/household and a professional/business application. Private households within European Union may return used electrical and electronic equipment to designated collection facilities free of charge. For more information about collection and recycling of old products and batteries, contact your local municipality, your waste disposal service or the point of sale where you purchased the items. In some member states, when you purchase new equipment, your local retailer may be required to take back your old equipment free of charge. For more information, contact your retailer.

Business Users in the European Union, in accordance with European legislation, end of life electrical and electronic equipment subject to disposal must be managed within agreed procedures. If you wish to discard electrical and electronic equipment, contact your dealer or supplier, local reseller or Xerox representative for end of life take-back information prior to disposal.

Improper handling of this type of waste could have a possible impact on the environment and human health due to potentially hazardous substances that are generally associated with EEE. Your cooperation in the correct disposal of this product will contribute to the effective usage of natural resources.

DISPOSAL OUTSIDE OF THE EUROPEAN UNION

These symbols are only valid in the European Union. If you wish to discard these items, please contact your local authorities or dealer and ask for the correct method of disposal.

Other Countries

Please contact your local waste management authority to request disposal guidance.

xerox™