EPSON

ET-2870 Series L3280 Series
ET-4800 Series L5290 Series ET-2820 Series L3260 Series

User's Guide

Printing

Copying

Scanning

Faxing

Maintaining the Printer

Solving Problems

NPD6444-03 EN

Contents

Guide to This Manual

Introduction to the Manuals. 7
Searching for Information. 7
Printing Only the Pages You Need. 8
About This Manual. 8
Marks and Symbols. 8
Notes on Screenshots and Illustrations. 9
Operating System References. 9
Trademarks. 10
Copyright. 10

Important Instructions

Safety Instructions. 13
Safety Instructions for Ink. 13
Printer Advisories and Warnings. 14
Advisories and Warnings for Setting Up the Printer. 14
Advisories and Warnings for Using the Printer. . 14
Advisories and Warnings for Using the LCD Screen. 15
Advisories and Warnings for Using the Printer with a Wireless Connection. 15
Advisories and Warnings for Transporting or Storing the Printer. 15
Notes on the Administrator Password. 15
Default Value of the Administrator Password. . . . 15
Changing the Administrator Password. 16
Operations that Require You to Enter the Administrator Password. 16
Initializing the Administrator Password. 16
Protecting Your Personal Information. 17

Part Names and Functions

Part Names and Functions. 19

Guide to the Control Panel

Control Panel. 24
Home Screen Configuration. 25
Guide to the Network Icon. 25
Entering Characters. 26
Viewing Animations. 26

Loading Paper

Paper Handling Precautions. 29
Paper Size and Type Settings. 29
List of Paper Type. 30
Loading Paper in the Rear Paper Feeder. 31
Loading Envelopes in the Rear Paper Feeder. 33
Loading Various Paper. 34
Loading Pre-punched Paper. 34
Loading Long Papers. 35

Placing Originals

Originals that are not Supported by the ADF. 37
Placing Originals on the ADF. 37
Placing Originals on the Scanner Glass. 38

Printing

Printing Documents. 41
Printing from a Computer - Windows. 41
Printing from a Computer - Mac OS. 58
Printing Documents from Smart Devices (iOS). . 63
Printing Documents from Smart Devices (Android). 64
Printing on Envelopes. 66
Printing on Envelopes from a Computer (Windows). 66
Printing on Envelopes from a Computer (Mac OS). 66
Printing Web Pages. 66
Printing Web Pages from a Computer. 66
Printing Web Pages from Smart Devices. 67
Printing Using a Cloud Service. 67
Registering to Epson Connect Service from the Control Panel. 68

Copying

Available Copying Methods. 70
Copying Originals. 70
Copying by Enlarging or Reducing. 71
Copying Multiple Originals onto One Sheet. . . . 72
Copying ID card. 74
Copying Without Margins. 75
Menu Options for Copying. 76
Number of Copies:. 76
B&W:. 76

Color:. 76
Density:. 76
Paper Setting:. 76
Reduce/Enlarge:. 76
Custom Size:. 77
Original Size:. 77
Multi-Page:. 77
Quality:. 77
ID Card Copy:. 77
Borderless Copy:. 77

Scanning

Basic Information on Scanning. 79
What is a "Scan"?. 79
Scanning Uses. 79
Available Scanning Methods. 79
Recommended File Formats to Suit Your Purpose. 80
Recommended Resolutions to Suit Your Purpose. 81
Scanning Originals to a Computer. 81
Scanning from the Control Panel. 82
Scanning from a Computer. 83
Scanning Originals Using WSD. 83
Setting Up a WSD Port. 84
Scanning Originals to a Smart Device. 86
Advanced Scanning. 86
Scanning Multiple Photos at the Same Time. . . . 86

Faxing

Before Using Fax Features. 89
Connecting the Printer to a Phone Line. 89
Making the Printer Ready to Send and Receive Faxes. 92
Making Settings for the Printer's Fax Features According to Use. 94
Making Contacts Available. 97
Overview of this Printer's Fax Features. 99
Feature: Sending Faxes. 99
Feature: Receiving Faxes. 100
Feature: PC-FAX Send/Receive (Windows/Mac OS). 100
Features: Various Fax Reports. 101
Feature: Security when Sending and Receiving Faxes. 101
Features: Other Useful Features. 101
Sending Faxes Using the Printer. 101
Selecting Recipients. 102
Various Ways of Sending Faxes. 103
Receiving Faxes on the Printer. 105
Receiving Incoming Faxes. 105
Receiving Faxes by Making a Phone Call. 107
Menu Options for Faxing. 107
Fax. 107
Scan Settings. 108
Fax Send Settings. 109
More. 110
Contacts Manager. 111
Using Other Faxing Features. 111
Printing Fax Report Manually. 111
Sending a Fax from a Computer. 111
Sending Documents Created Using an Application (Windows). 111
Sending Documents Created Using an Application (Mac OS). 114
Receiving Faxes on a Computer. 115
Checking for New Faxes (Windows). 116
Checking for New Faxes (Mac OS). 117
Canceling the Feature that Saves Incoming Faxes to the Computer. 118

Maintaining the Printer

Checking the Ink Level. 120
Improving Print, Copy, Scan, and Fax Quality. . . . 120
Checking and Cleaning the Print Head. 120
Running Power Cleaning. 122
Preventing nozzle clogging. 123
Aligning the Print Head. 123
Cleaning the Paper Path for Ink Smears. 124
Cleaning the Scanner Glass. 124
Cleaning the ADF. 125
Cleaning the Printer. 128
Cleaning Spilled ink. 128
Checking the Total Number of Pages Fed Through the Printer. 128
Saving Power. 129
Saving Power - Control Panel. 129
Installing or Uninstalling Applications Separately. 129
Installing the Applications Separately. 129
Adding the Printer (for Mac OS Only). 132
Uninstalling Applications. 132
Updating Applications and Firmware. 134
Transporting and Storing the Printer. 134

Solving Problems

The Printer Does Not Work as Expected. 139
The Printer Does Not Turn On or Off. 139
Power Turns Off Automatically. 139
Paper Does Not Feed Properly. 139
Cannot Print. 144
Cannot Start Scanning. 161
Cannot Send or Receive Faxes. 172
Cannot Operate the Printer as Expected. 185
An Error Code is Displayed on the LCD Screen. . . 188
Paper Gets Jammed. 190
Removing Jammed Paper. 190
Removing Jammed Paper from the ADF. 194
Preventing Paper Jams. 195
It is Time to Refill the Ink. 196
Ink Bottle Handling Precautions. 196
Refilling the Ink Tanks. 197
Printing, Copying, Scanning, and Faxing Quality is Poor. 201
Print Quality is Poor. 201
Copy Quality is Poor. 209
Scanned Image Problems. 216
The Quality of the Sent Fax is Poor. 219
Received Fax Quality is Poor. 221
Cannot Solve Problem. 221
Cannot Solve Printing or Copying Problems. . . 221

Adding or Replacing the Computer or Devices

Connecting to a Printer that has been Connected to the Network. 224
Using a Network Printer from a Second Computer. 224
Using a Network Printer from a Smart Device. . 225
Re-setting the Network Connection. 225
When Replacing the Wireless Router. 225
When Changing the Computer. 226
Changing the Connection Method to the Computer. 226
Making Wi-Fi Settings from the Control Panel. . 228
Connecting a Smart Device and Printer Directly (Wi-Fi Direct). 231
About Wi-Fi Direct. 231
Connecting to Devices using Wi-Fi Direct. 231
Disconnecting Wi-Fi Direct (Simple AP) Connection. 233
Changing the Wi-Fi Direct (Simple AP) Settings Such as the SSID. 234
Checking the Network Connection Status. 235
Checking the Network Connection Status from the Control Panel. 235
Printing a Network Connection Report. 236
Printing a Network Status Sheet. 242
Checking the Network of the Computer (Windows only). 242

Product Information

Paper Information. 245
Available Paper and Capacities. 245
Unavailable Paper Types. 247
Consumable Products Information. 248
Ink Bottle Codes. 248
Software Information. 249
Software for Printing. 249
Software for Scanning. 252
Software for Faxing. 253
Software for Package Creation. 254
Software for Making Settings. 254
Software for Updating. 256
Settings Menu List. 257
Maintenance. 257
Printer Setup. 258
Network Settings. 260
Epson Connect Services. 261
Contacts Manager. 261
Fax Settings. 262
Print Status Sheet. 267
Print Counter. 267
Customer Research. 267
Restore Default Settings. 268
Firmware Update. 268
Product Specifications. 268
Printer Specifications. 268
Scanner Specifications. 269
Interface Specifications. 270
ADF Specifications. 270
Fax Specifications. 270
Network Specifications. 271
Supported Third Party Services. 273
Dimensions. 273
Electrical Specifications. 274
Environmental Specifications. 275
System Requirements. 276
Regulatory Information. 276
Standards and Approvals. 276
Restrictions on Copying. 278

Where to Get Help

Technical Support Web Site. 280
Contacting Epson Support. 280
Before Contacting Epson. 280
Help for Users in Europe. 280
Help for Users in Taiwan. 281
Help for Users in Australia. 281
Help for Users in New Zealand. 282
Help for Users in Singapore. 282
Help for Users in Thailand. 282
Help for Users in Vietnam. 283
Help for Users in Indonesia. 283
Help for Users in Hong Kong. 284
Help for Users in Malaysia. 284
Help for Users in India. 284
Help for Users in the Philippines. 285

Guide to This Manual

Introduction to the Manuals. 7

Searching for Information. 7

Printing Only the Pages You Need. 8

About This Manual. 8

Trademarks. 10

Copyright. 10

Introduction to the Manuals

The following manuals are supplied with your Epson printer. As well as the manuals, check the various types of help information available from the printer itself or from the Epson software applications.

❏ Important Safety Instructions (paper manual)

Provides you with instructions to ensure the safe use of this printer.

❏ Start Here (paper manual)

Provides you with information on setting up the printer and installing the software.

❏ User's Guide (digital manual)

This manual. This manual is available as PDF and Web manuals. Provides overall information and instructions on using the printer, on network settings when using the printer on a network, and on solving problems.

This manual is used for the ET-4800 Series/L5290 Series and ET-2870 Series/ET-2820 Series/L3280 Series/L3260 Series. The following features are only available for the ET-4800 Series/L5290 Series.

❏ Faxing

❏ ADF (Automatic Document Feeder)

❏ Ethernet connection

You can obtain the latest versions of the above manuals with the following methods.

❏ Paper manual

Visit the Epson Europe support website at http://www.epson.eu/support, or the Epson worldwide support website at http://support.epson.net/.

❏ Digital manual

To view the Web manual, visit the following website, enter the product name, and then go to **Support**.

http://epson.sn

Searching for Information

The PDF manual allows you to search for information you are looking for by keyword, or jump directly to specific ections using the bookmarks. This section explains how to use a PDF manual that has been opened in Adobe Acrobat Reader DC on your computer.

Searching by keyword

Click **Edit** > **Advanced Search**. Enter the keyword (text) for information you want to find in the search window, and then click **Search**. Hits are displayed as a list. Click one of the displayed hits to jump to that page.

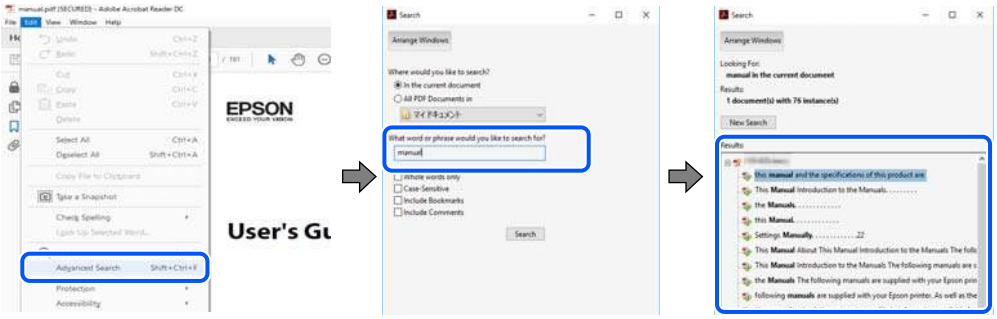

Jumping directly from bookmarks

Click a title to jump to that page. Click + or > to view the lower level titles in that section. To return to the previous page, perform the following operation on your keyboard.

❏ Windows: Hold down **Alt**. and then press ←.

❏ Mac OS: Hold down the command key, and then press ←.

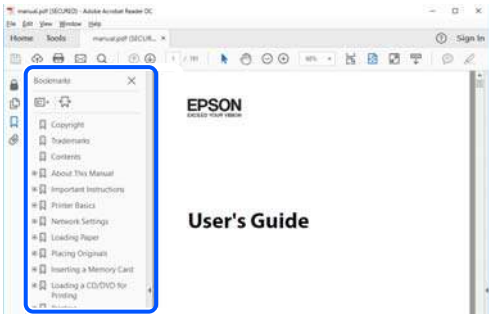

Printing Only the Pages You Need

You can extract and print only the pages you need. Click **Print** in the **File** menu, and then specify the pages you want to print in **Pages** in **Pages to Print**.

❏ To specify a series of pages, enter a hyphen between the start page and the end page.

Example: 20-25

❏ To specify pages that are not in series, divide the pages with commas.

Example: 5, 10, 15

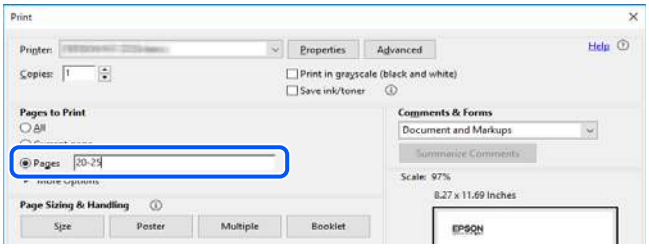

About This Manual

This section explains the meaning of marks and symbols, notes on descriptions, and operating system reference information used in this manual.

Marks and Symbols

⚠ ***Caution:***

Instructions that must be followed carefully to avoid bodily injury.

Important:
Instructions that must be observed to avoid damage to your equipment.

Note:
Provides complementary and reference information.

Related Information

➡ Links to related sections.

Notes on Screenshots and Illustrations

- ❏ Screenshots of the printer driver are from Windows 10 or macOS High Sierra. The content displayed on the screens varies depending on the model and situation.
- ❏ Illustrations used in this manual are examples only. Although there may be slight differences depending on themodel, the method of operation is the same.
- ❏ Some of the menu items on the LCD screen vary depending on the model and settings.
- ❏ You can read the QR code using dedicated app.

Operating System References

Windows

In this manual, terms such as "Windows 10", "Windows 8.1", "Windows 8", "Windows 7", "Windows Vista", "Windows XP", "Windows Server 2019", "Windows Server 2016", "Windows Server 2012 R2", "Windows Server 2012", "Windows Server 2008 R2", "Windows Server 2008", "Windows Server 2003 R2", and "Windows Server 2003" refer to the following operating systems. Additionally, "Windows" is used to refer to all versions.

- ❏ Microsoft® Windows® 10 operating system
- ❏ Microsoft® Windows® 8.1 operating system
- ❏ Microsoft® Windows® 8 operating system
- ❏ Microsoft® Windows® 7 operating system
- ❏ Microsoft® Windows Vista® operating system
- ❏ Microsoft® Windows® XP operating system
- ❏ Microsoft® Windows® XP Professional x64 Edition operating system
- ❏ Microsoft® Windows Server® 2019 operating system
- ❏ Microsoft® Windows Server® 2016 operating system
- ❏ Microsoft® Windows Server® 2012 R2 operating system
- ❏ Microsoft® Windows Server® 2012 operating system
- ❏ Microsoft® Windows Server® 2008 R2 operating system
- ❏ Microsoft® Windows Server® 2008 operating system
- ❏ Microsoft® Windows Server® 2003 R2 operating system
- ❏ Microsoft® Windows Server® 2003 operating system

Mac OS

In this manual, "Mac OS" is used to refer to Mac OS X v10.6.8 or later.

Trademarks

- Epson Scan 2 software is based in part on the work of the Independent JPEG Group.
- libtiff

  Copyright © 1988-1997 Sam Leffler

  Copyright © 1991-1997 Silicon Graphics, Inc.

  Permission to use, copy, modify, distribute, and sell this software and its documentation for any purpose is hereby granted without fee, provided that (i) the above copyright notices and this permission notice appear in all copies of the software and related documentation, and (ii) the names of Sam Leffler and Silicon Graphics may not be used in any advertising or publicity relating to the software without the specific, prior written permission of Sam Leffler and Silicon Graphics.

  THE SOFTWARE IS PROVIDED "AS-IS" AND WITHOUT WARRANTY OF ANY KIND, EXPRESS, IMPLIED OR OTHERWISE, INCLUDING WITHOUT LIMITATION, ANY WARRANTY OF MERCHANTABILITY OR FITNESS FOR A PARTICULAR PURPOSE.

  IN NO EVENT SHALL SAM LEFFLER OR SILICON GRAPHICS BE LIABLE FOR ANY SPECIAL, INCIDENTAL, INDIRECT OR CONSEQUENTIAL DAMAGES OF ANY KIND, OR ANY DAMAGES WHATSOEVER RESULTING FROM LOSS OF USE, DATA OR PROFITS, WHETHER OR NOT ADVISED OF THE POSSIBILITY OF DAMAGE, AND ON ANY THEORY OF LIABILITY, ARISING OUT OF OR IN CONNECTION WITH THE USE OR PERFORMANCE OF THIS SOFTWARE.
- QR Code is a registered trademark of DENSO WAVE INCORPORATED in Japan and other countries.
- Microsoft®, Windows®, Windows Server®, and Windows Vista® are registered trademarks of Microsoft Corporation.
- Apple, Mac, macOS, OS X, Bonjour, ColorSync, Safari, AirPrint, iPad, iPhone, iPod touch, and iTunes are trademarks of Apple Inc., registered in the U.S. and other countries.
- Use of the Works with Apple badge means that an accessory has been designed to work specifically with the technology identified in the badge and has been certified by the developer to meet Apple performance standards.
- Chrome, Google Play, and Android are trademarks of Google LLC.
- Adobe, Acrobat, and Reader are either registered trademarks or trademarks of Adobe in the United States and/or other countries.
- Firefox is a trademark of the Mozilla Foundation in the U.S. and other countries.
- Mopria® and the Mopria® Logo are registered and/or unregistered trademarks and service marks of Mopria Alliance, Inc. in the United States and other countries. Unauthorized use is strictly prohibited.
- General Notice: Other product names used herein are for identification purposes only and may be trademarks of their respective owners. Epson disclaims any and all rights in those marks.

Copyright

No part of this publication may be reproduced, stored in a retrieval system, or transmitted in any form or by any means, electronic, mechanical, photocopying, recording, or otherwise, without the prior written permission of Seiko Epson Corporation. No patent liability is assumed with respect to the use of the information contained

herein. Neither is any liability assumed for damages resulting from the use of the information herein. The information contained herein is designed only for use with this Epson product. Epson is not responsible for any use of this information as applied to other products.

Neither Seiko Epson Corporation nor its affiliates shall be liable to the purchaser of this product or third parties for damages, losses, costs, or expenses incurred by the purchaser or third parties as a result of accident, misuse, or abuse of this product or unauthorized modifications, repairs, or alterations to this product, or (excluding the U.S.) failure to strictly comply with Seiko Epson Corporation's operating and maintenance instructions.

Seiko Epson Corporation and its affiliates shall not be liable for any damages or problems arising from the use of any options or any consumable products other than those designated as Original Epson Products or Epson Approved Products by Seiko Epson Corporation.

Seiko Epson Corporation shall not be held liable for any damage resulting from electromagnetic interference that occurs from the use of any interface cables other than those designated as Epson Approved Products by Seiko Epson Corporation.

© 2023 Seiko Epson Corporation

The contents of this manual and the specifications of this product are subject to change without notice.

Important Instructions

Safety Instructions. 13

Printer Advisories and Warnings. 14

Notes on the Administrator Password. 15

Protecting Your Personal Information. 17

Safety Instructions

Read and follow these instructions to ensure safe use of this printer. Make sure you keep this manual for future reference. Also, be sure to follow all warnings and instructions marked on the printer.

- ❏ Some of the symbols used on your printer are to ensure safety and proper use of the printer. Visit the following Web site to learn the meaning of the symbols.

  http://support.epson.net/symbols

- ❏ Use only the power cord supplied with the printer and do not use the cord with any other equipment. Use of other cords with this printer or the use of the supplied power cord with other equipment may result in fire or electric shock.
- ❏ Be sure your AC power cord meets the relevant local safety standard.
- ❏ Never disassemble, modify, or attempt to repair the power cord, plug, printer unit, scanner unit, or options by yourself, except as specifically explained in the printer's manuals.
- ❏ Unplug the printer and refer servicing to qualified service personnel under the following conditions:

  The power cord or plug is damaged; liquid has entered the printer; the printer has been dropped or the casing damaged; the printer does not operate normally or exhibits a distinct change in performance. Do not adjust controls that are not covered by the operating instructions.

- ❏ Place the printer near a wall outlet where the plug can be easily unplugged.
- ❏ Do not place or store the printer outdoors, near excessive dirt or dust, water, heat sources, or in locations subject to shocks, vibrations, high temperature or humidity.
- ❏ Take care not to spill liquid on the printer and not to handle the printer with wet hands.
- ❏ Keep the printer at least 22 cm away from cardiac pacemakers. Radio waves from this printer may adversely affect the operation of cardiac pacemakers.
- ❏ If the LCD screen is damaged, contact your dealer. If the liquid crystal solution gets on your hands, wash them thoroughly with soap and water. If the liquid crystal solution gets into your eyes, flush them immediately with water. If discomfort or vision problems remain after a thorough flushing, see a doctor immediately.
- ❏ Avoid using a telephone during an electrical storm. There may be a remote risk of electric shock from lightning.
- ❏ Do not use a telephone to report a gas leak in the vicinity of the leak.

Safety Instructions for Ink

- ❏ Be careful not to touch any ink when you handle the ink tanks, ink tank caps, and opened ink bottles or ink bottle caps.
  - ❏ If ink gets on your skin, wash the area thoroughly with soap and water.
  - ❏ If ink gets into your eyes, flush them immediately with water. If discomfort or vision problems continue after a thorough flushing, see a doctor immediately.
  - ❏ If ink gets into your mouth, see a doctor right away.
- ❏ Do not shake an ink bottle too vigorously or subject it to strong impacts as this can cause ink to leak.
- ❏ Keep ink bottles out of the reach of children. Do not allow children to drink from the ink bottles.

Printer Advisories and Warnings

Read and follow these instructions to avoid damaging the printer or your property. Make sure you keep this manual for future reference.

Advisories and Warnings for Setting Up the Printer

- ❏ Do not block or cover the vents and openings in the printer.
- ❏ Use only the type of power source indicated on the printer's label.
- ❏ Avoid using outlets on the same circuit as photocopiers or air control systems that regularly switch on and off.
- ❏ Avoid electrical outlets controlled by wall switches or automatic timers.
- ❏ Keep the entire computer system away from potential sources of electromagnetic interference, such as loudspeakers or the base units of cordless telephones.
- ❏ The power-supply cords should be placed to avoid abrasions, cuts, fraying, crimping, and kinking. Do not place objects on top of the power-supply cords and do not allow the power-supply cords to be stepped on or run over. Be particularly careful to keep all the power-supply cords straight at the ends and the points where they enter and leave the transformer.
- ❏ If you use an extension cord with the printer, make sure that the total ampere rating of the devices plugged into the extension cord does not exceed the cord's ampere rating. Also, make sure that the total ampere rating of all devices plugged into the wall outlet does not exceed the wall outlet's ampere rating.
- ❏ If you plan to use the printer in Germany, the building installation must be protected by a 10 or 16 amp circuit breaker to provide adequate short-circuit protection and over-current protection for the printer.
- ❏ When connecting the printer to a computer or other device with a cable, ensure the correct orientation of the connectors. Each connector has only one correct orientation. Inserting a connector in the wrong orientation may damage both devices connected by the cable.
- ❏ Place the printer on a flat, stable surface that extends beyond the base of the printer in all directions. The printer will not operate properly if it is tilted at an angle.
- ❏ Allow space above the printer so that you can fully raise the document cover.
- ❏ Leave enough space in front of the printer for the paper to be fully ejected.
- ❏ Avoid places subject to rapid changes in temperature and humidity. Also, keep the printer away from direct sunlight, strong light, or heat sources.

Advisories and Warnings for Using the Printer

- ❏ Do not insert objects through the slots in the printer.
- ❏ Do not put your hand inside the printer during printing.
- ❏ Do not touch the white flat cable and ink tubes inside the printer.
- ❏ Do not use aerosol products that contain flammable gases inside or around the printer. Doing so may cause fire.
- ❏ Do not move the print head by hand; otherwise, you may damage the printer.
- ❏ Be careful not to trap your fingers when closing the scanner unit.
- ❏ Do not press too hard on the scanner glass when placing the originals.

- ❏ Prolonged use of the printer when the ink level is below the lower line could damage the printer. Fill the ink tank to the upper line while the printer is not operating. To display the correct ink level estimates, reset the ink level after filling the tank.
- ❏ Always turn the printer off using the ⏻ button. Do not unplug the printer or turn off the power at the outlet until the ⏻ light stops flashing.
- ❏ If you are not going to use the printer for a long period, be sure to unplug the power cord from the electrical outlet.

Advisories and Warnings for Using the LCD Screen

- ❏ The LCD screen may contain a few small bright or dark spots, and because of its features it may have an uneven brightness. These are normal and do not indicate that it is damaged in any way.
- ❏ Only use a dry, soft cloth for cleaning. Do not use liquid or chemical cleaners.
- ❏ The exterior cover of the LCD screen could break if it receives a heavy impact. Contact your dealer if the screen's surface chips or cracks, and do not touch or attempt to remove the broken pieces.

Advisories and Warnings for Using the Printer with a Wireless Connection

- ❏ Radio waves from this printer may negatively affect the operation of medical electronic equipment, causing them to malfunction. When using this printer inside medical facilities or near medical equipment, follow directions from the authorized personnel representing the medical facilities, and follow all posted warnings and directions on the medical equipment.
- ❏ Radio waves from this printer may negatively affect the operation of automatically controlled devices such as automatic doors or fire alarms, and could lead to accidents due to malfunction. When using this printer near automatically controlled devices, follow all posted warnings and directions on these devices.

Advisories and Warnings for Transporting or Storing the Printer

- ❏ When storing or transporting the printer, avoid tilting it, placing it vertically, or turning it upside down; otherwise ink may leak.
- ❏ Before transporting the printer, make sure that the print head is in the home (far right) position.

Notes on the Administrator Password

This printer allows you to set an administrator password to prevent unauthorized access or changes to the device settings and network settings stored in the product when connecting to a network.

Default Value of the Administrator Password

The default value of the administrator password is printed on the label on the product itself, such as the one shown. The position where the label is attached depends on the product, such as the side where the cover is opened, the back, or the bottom.

The following illustration is an example of the label attachment position on the side of the printer where the cover opens.

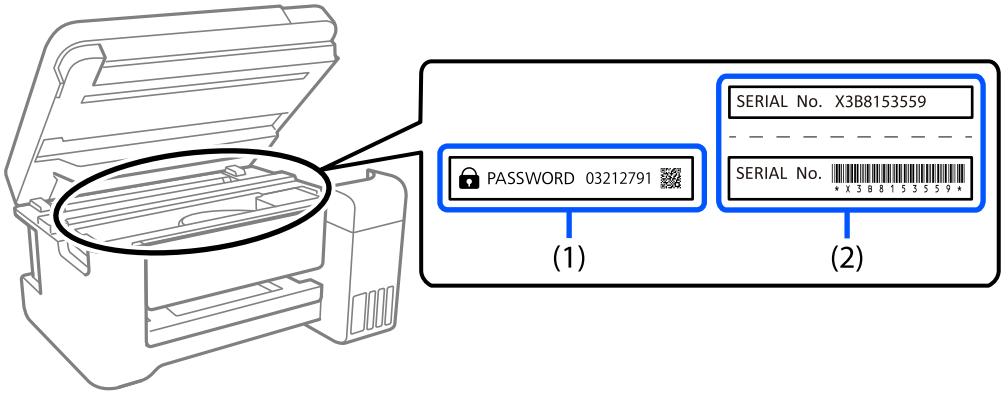

If both labels (1) and (2) are attached, the value next to PASSWORD written on the label in (1) is the default value. In this example, the default value is 03212791.

If only label (2) is attached, the serial number printed on the label in (2) is the default value. In this example, the default value is X3B8153559.

Changing the Administrator Password

For security reasons, we recommend changing the initial password.

It can be changed from Web Config and Epson Device Admin. When changing the password, set it with at least 8 single-byte alphanumerical characters and symbols.

Related Information

➡ "Running Web Config on a Web Browser" on page 255

Operations that Require You to Enter the Administrator Password

If you are prompted to enter the administrator password when performing the following operations, enter the administrator password set on the printer.

❏ When updating the firmware of the printer from a computer or smart device

❏ When logging on to the advanced settings of Web Config

❏ When setting using an application, such as Fax Utility, that can change the printer's settings.

Initializing the Administrator Password

You can return the administrator password to the default settings by initializing the network settings.

Related Information

➡ "Restore Default Settings" on page 268

Protecting Your Personal Information

When you give the printer to someone else or dispose of it, erase all the personal information stored in the printer's memory by selecting **Settings** > **Restore Default Settings** > **Clear All Data and Settings** on the control panel.

Part Names and Functions

Part Names and Functions. 19

Part Names and Functions

Only for ET-4800 Series/L5290 Series

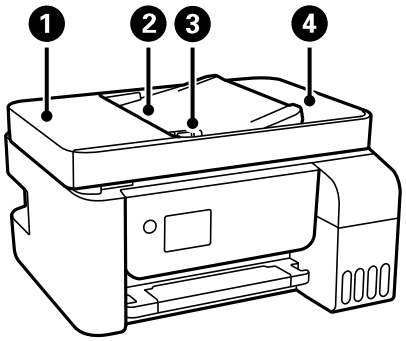

1	ADF (Automatic Document Feeder) cover	Open when removing jammed originals in the ADF.
2	ADF input tray	Feeds originals automatically.
3	ADF edge guide	Feeds originals straight into the printer. Slide to the edge of the originals.
4	ADF output tray	Holds originals ejected from the ADF.

Only for ET-4800 Series/L5290 Series

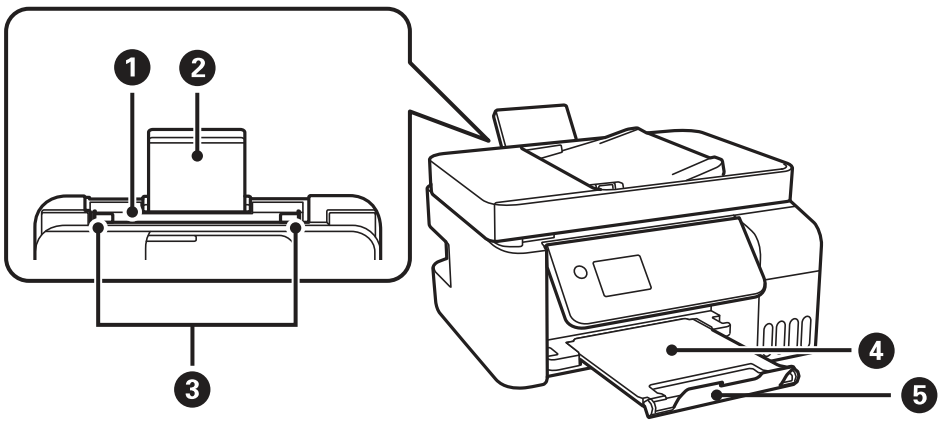

1	Rear paper feeder	Loads paper.
2	Paper support	Supports loaded paper.
3	Edge guide	Feeds the paper straight into the printer. Slide to the edges of the paper.
4	Output tray	Holds the ejected paper.
5	Stopper	Position the stopper to prevent print outs from falling from the output tray.

Only for ET-2870 Series/ET-2820 Series/L3280 Series/L3260 Series

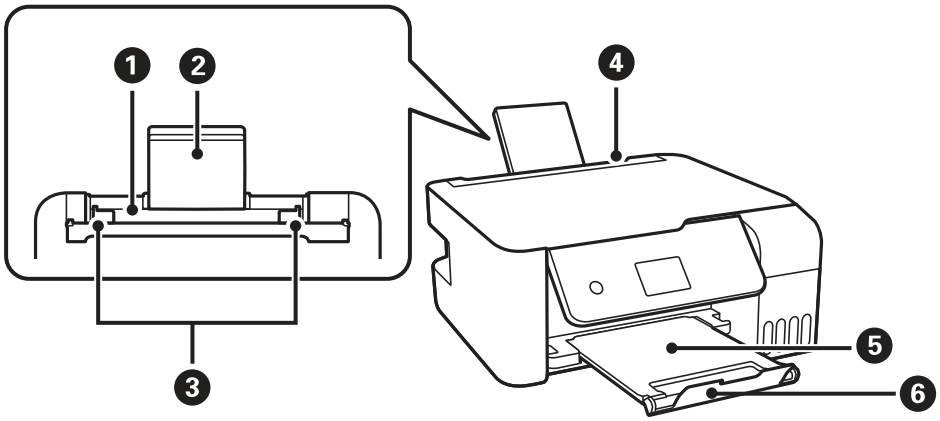

1	Rear paper feeder	Loads paper.
2	Paper support	Supports loaded paper.
3	Edge guide	Feeds the paper straight into the printer. Slide to the edges of the paper.
4	Feeder guard	Prevents foreign substance from entering the printer. Usually keep this guard closed.
5	Output tray	Holds the ejected paper.
6	Stopper	Position the stopper to prevent print outs from falling from the output tray.

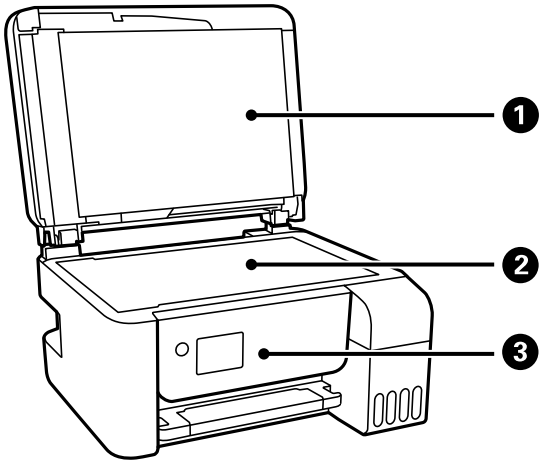

1	Document cover	Blocks external light while scanning.
2	Scanner glass	Place the originals.
3	Control panel	Indicates the printer's status and allows you to make print settings.

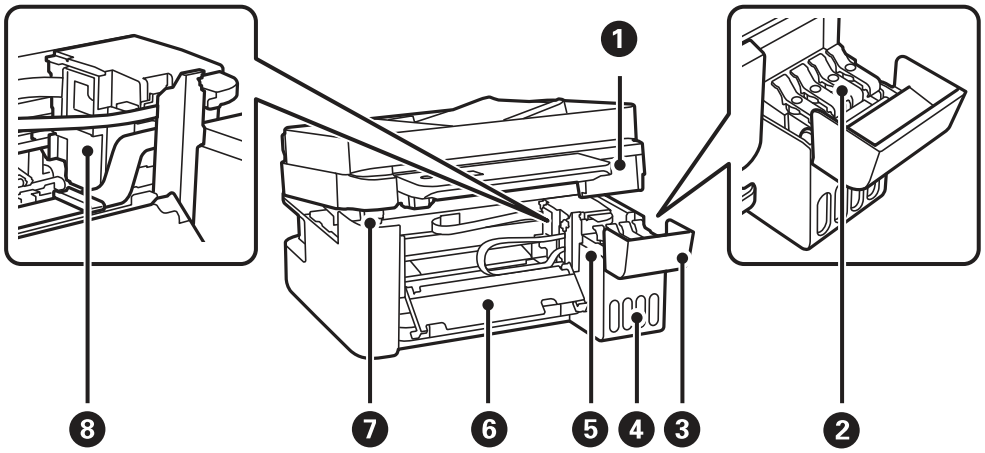

1	Scanner unit	Scans placed originals. Open to remove jammed paper. This unit should usually be kept closed.
2	Ink tank cap	Open to refill the ink tank.
3	Ink tank cover	
4	Ink tank unit	Contains the ink tanks.
5	Ink reservoir tank (Ink tank)	Supplies ink to the print head.
6	Inner cover	Open when removing jammed paper inside the printer.
7	Scanner unit support	Supports the scanner unit when opening it.
8	Print head	Ink is ejected from the print head nozzles underneath.

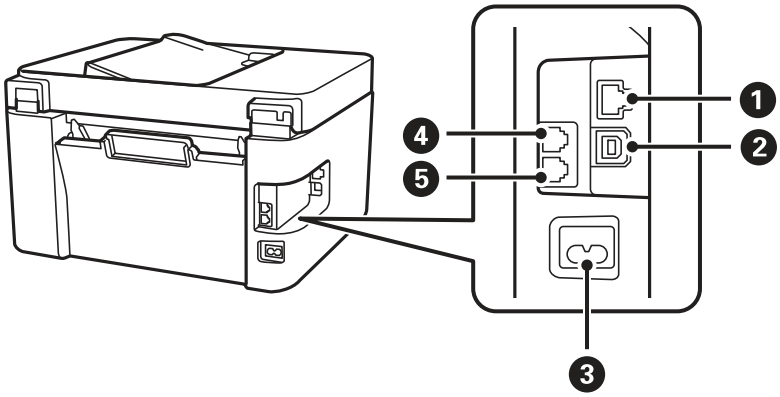

1	LAN port*	Connects a LAN cable.
2	USB port	Connects a USB cable to connect with a computer.
3	AC inlet	Connects the power cord.
4	EXT. port*	Connects external phone devices.
5	LINE port*	Connects a phone line.

* Only for ET-4800 Series/L5290 Series

Guide to the Control Panel

Control Panel. 24

Home Screen Configuration. 25

Entering Characters. 26

Viewing Animations. 26

Control Panel

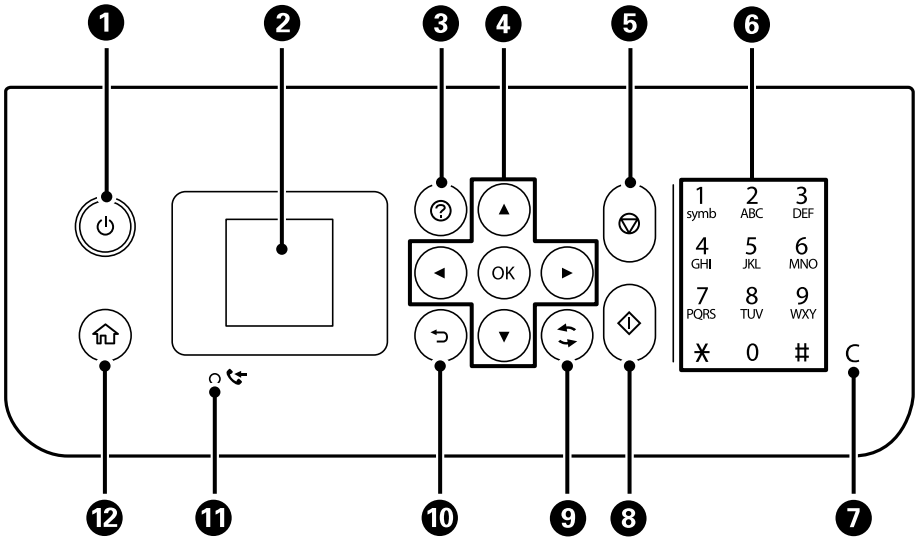

❶	Turns the printer on or off. Unplug the power cord after checking that the power light is off.
❷	Displays menus and messages. Use buttons on the control panel to select a menu or to make settings.
❸	Displays the solutions when you are in trouble.
❹	Use the ▲▼◀▶ buttons to select a menu, and then press the OK button to enter the selected menu.
❺	Stops the current operation.
❻*	Enters numbers, characters, and symbols.
❼*	Clears number settings such as the number of copies.
❽	Starts an operation such as printing or copying.
❾	Applies to a variety of functions depending on the situation.
❿	Returns to the previous screen.
⓫*	Turns on when received documents that have not yet been printed or saved are stored in the printer's memory.
⓬	Displays the home screen.

* Only for ET-4800 Series/L5290 Series

Home Screen Configuration

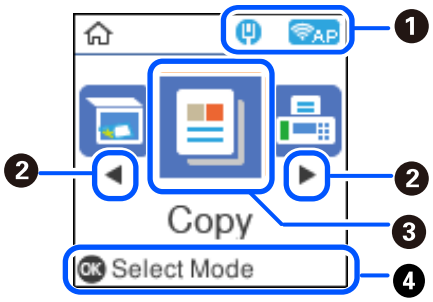

1		Displays the network connection status. See the following for more details. "Guide to the Network Icon" on page 25
2	◀▶	When ◀ and ▶ are displayed, you can scroll right or left by pressing the ◀ or ▶ button.
3	Displays each menu. ❏ Scan Allows you to scan documents or photos and save them to a computer. ❏ Copy Allows you to copy documents. ❏ Fax Allows you to send faxes. ❏ Quiet Mode Displays **Quiet Mode** setting that allows you to reduce the noise the printer makes. However, enabling this may reduce print speed. Depending on the paper type and print quality settings you selected, there may be no dierence in the printer's noise level. You can also make this setting from the **Settings** menu. **Settings** > **Printer Setup** > **Quiet Mode** ❏ Settings Allows you to make settings related to maintenance, printer settings, and operations. ❏ Maintenance Displays the menus recommended to improve the quality of your printouts such as unclogging nozzles by printing a nozzle check pattern and performing head cleaning, and improving blurring or banding in your printouts by aligning the print head. You can also make this setting from the **Settings** menu. **Settings** > **Maintenance** ❏ Wi-Fi Setup Displays menus that allow you to set up the printer for use on a wireless network. You can also make this setting from the **Settings** menu. **Settings** > **Network Settings** > **Wi-Fi Setup**	
4	Avaiable buttons are displayed. In this example, you can proceed to the selected menu by pressing the OK button.	

Guide to the Network Icon

	The printer is not connected to a wired (Ethernet) network or unset it.
	The printer is connected to a wired (Ethernet) network.

	The printer is not connected to a wireless (Wi-Fi) network.
	The printer is searching for SSID, unset IP address, or having a problem with a wireless (Wi-Fi) network.
	The printer is connected to a wireless (Wi-Fi) network. The number of bars indicates the signal strength of the connection. The more bars there are, the stronger the connection.
AP	The printer is not connected to a wireless (Wi-Fi) network in Wi-Fi Direct (Simple AP) mode.
AP	The printer is connected to a wireless (Wi-Fi) network in Wi-Fi Direct (Simple AP) mode.

Entering Characters

To enter characters and symbols for network settings and register contacts from the control panel, use the ▲, ▼, ◀, and ▶ buttons and the software keyboard on the LCD screen. Press the ▲, ▼, ◀, or ▶ button to select a character or function button on the keyboard, and then press the OK button. When you have finished entering characters, select **OK**, and then press the OK button.

Function button	Descriptions
◀ ▶	Moves the cursor to the left or right.
A 1 #	Switches the character type. You can enter alphanumerics or symbols. You can also switch them by using the button.
␣	Enters a space.
⌫	Deletes a character to the left (backspace).
OK	Enters the selected characters.

Viewing Animations

You can view animations of operating instructions such as loading paper or removing jammed paper on the LCD screen.

❏ Press ⓘ button: Displays the help screen. Select **How To** and then select the items that you want to view.

❏ Select **How to** at the bottom of the operation screen: Displays the context-sensitive animation.

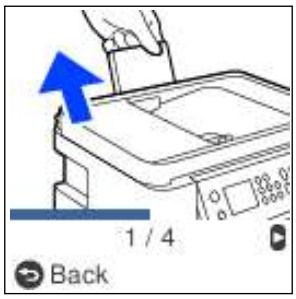

Loading Paper

Paper Handling Precautions. 29

Paper Size and Type Settings. 29

Loading Paper in the Rear Paper Feeder. 31

Loading Envelopes in the Rear Paper Feeder. 33

Loading Various Paper. 34

Paper Handling Precautions

- ❏ Read the instruction sheets supplied with the paper.
- ❏ To achieve high-quality printouts with genuine Epson paper, use the paper in the environment stated on the sheets supplied with the paper.
- ❏ Fan and align the edges of the paper before loading. Do not fan or curl photo paper. Doing so may damage the printable side.

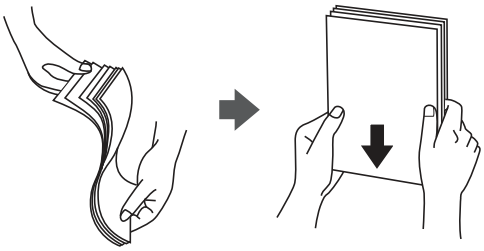

- ❏ If the paper is curled, flatten it or curl it slightly in the opposite direction before loading. Printing on curled paper may cause paper jams and smears on the printout.

- ❏ Paper feed problems may occur frequently for manual 2-sided printing when printing on one side of pre-printed paper. Reduce the number of sheets to half or less, or load one sheet of paper at a time if paper jams continue.
- ❏ Make sure you are using long-grain paper. If you are not sure what type of paper you are using, check the paper packaging or contact the manufacturer to confirm the paper specifications.
- ❏ Fan and align the edges of the envelopes before loading. When the stacked envelopes are puffed up with air, press them down to flatten them before loading.

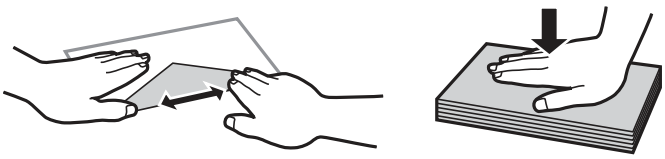

Paper Size and Type Settings

If you register the paper size and type on the screen displayed when you load paper, the printer informs you when the registered information and print settings differ. This prevents you from wasting paper and ink by making sure you are not printing on the wrong paper size or printing in the wrong color due to using settings that do not match the paper type.

This screen is not displayed if you have disabled Paper Setup Auto Display. If you disable this feature, you cannot print from an iPhone or iPad using AirPrint.

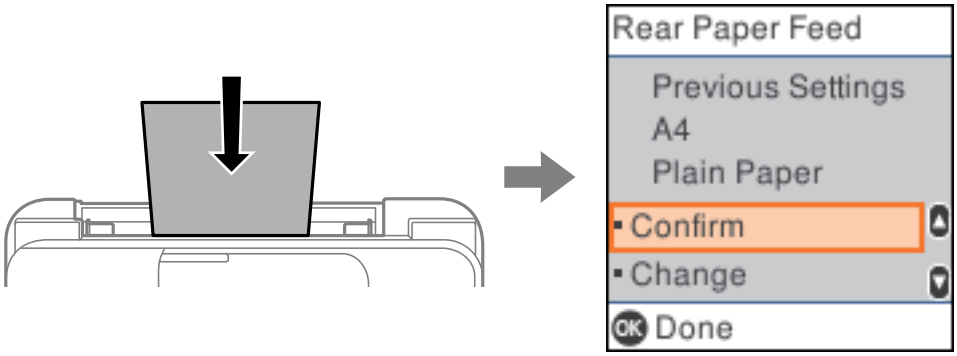

If displayed paper size and type differ from the loaded paper, change the settings for the paper size and paper type, and then confirm them.

Note:
You can also display the paper size and paper type settings screen by selecting ***Settings*** > ***Printer Setup*** > ***Paper Source Settings*** > ***Paper Setting****.*

List of Paper Type

To obtain optimum printing results, select the paper type that suits the paper.

Media Name	Media Type	
	Control Panel	**Printer Driver**
Epson Bright White Ink Jet Paper	Plain paper	Plain paper
Epson Ultra Glossy Photo Paper Epson Value Glossy Photo Paper	Ultra Glossy	Epson Ultra Glossy
Epson Premium Glossy Photo Paper	Prem. Glossy	Epson Premium Glossy
Epson Premium Semigloss Photo Paper	Prem. Semigloss	Epson Premium Semigloss
Epson Photo Paper Glossy	Glossy	Photo Paper Glossy
Epson Matte Paper-Heavyweight Epson Double-Sided Matte Paper	Matte	Epson Matte
Epson Photo Quality Ink Jet Paper Epson Double-sided Photo Quality Ink Jet Paper	Photo Quality Ink Jet	Epson Photo Quality Ink Jet

Loading Paper in the Rear Paper Feeder

1. Pull out the paper support.

   ET-4800 Series/L5290 Series

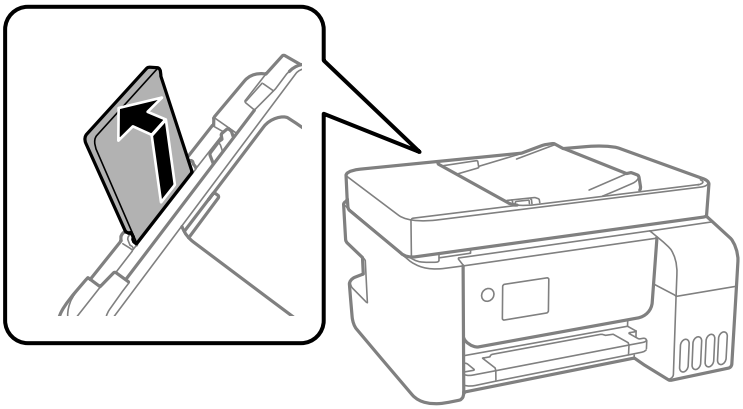

   ET-2870 Series/ET-2820 Series/L3280 Series/L3260 Series

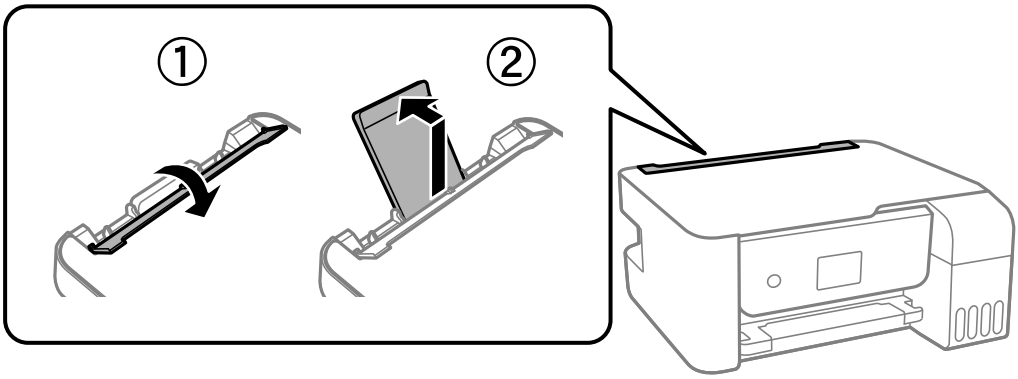

2. Slide the edge guides.

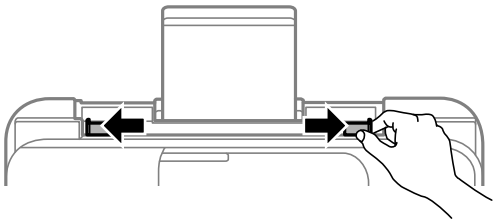

3. Load paper at the center of the paper support with the printable side facing up.

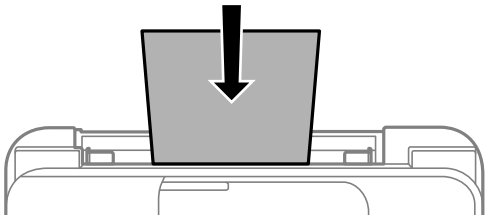

> ***Important:***
> - *Do not load more than the maximum number of sheets specified for the paper. For plain paper, do not load above the line just under the ▼ symbol inside the edge guide.*
> - *Load paper short edge first. However, when you have set the long edge as the width of the user defined size, load paper long edge first.*

4. Slide the edge guides to the edges of the paper.

   ET-2870 Series/ET-2820 Series/L3280 Series/L3260 Series: Close the feeder guard after sliding the edge guides.

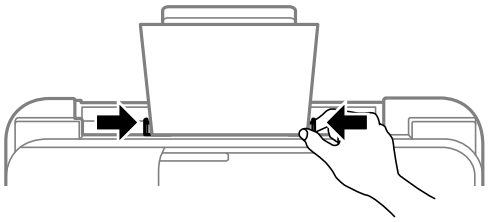

> ***Important:***
> *ET-2870 Series/ET-2820 Series/L3280 Series/L3260 Series: Do not place objects on the feeder guard. Doing so may prevent paper from feeding.*

5. Select the paper size and paper type.

6. Slide out the output tray.

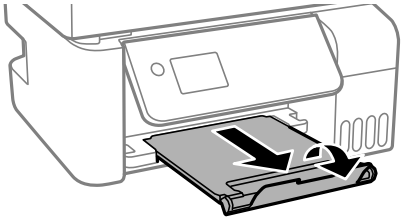

Note:
Return the remaining paper to its package. If you leave it in the printer, the paper may curl or the print quality may decline.

Related Information

➡ "Paper Size and Type Settings" on page 29

Loading Envelopes in the Rear Paper Feeder

1. Pull out the paper support.

   ET-4800 Series/L5290 Series

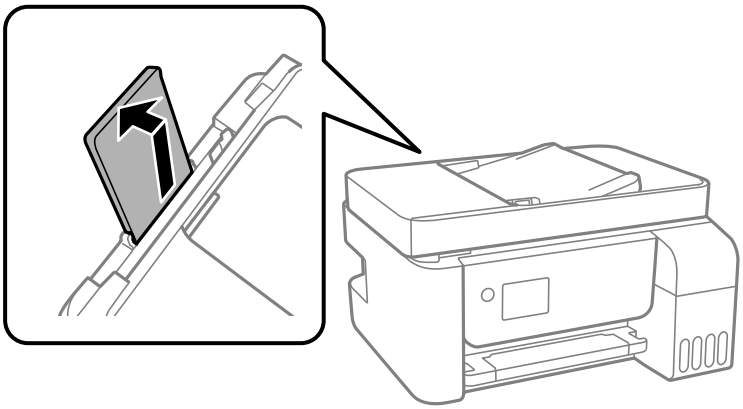

   ET-2870 Series/ET-2820 Series/L3280 Series/L3260 Series

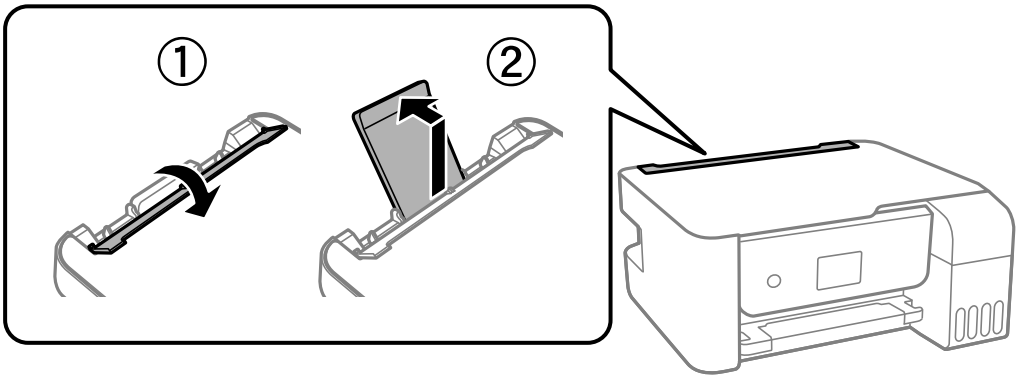

2. Slide the edge guides.

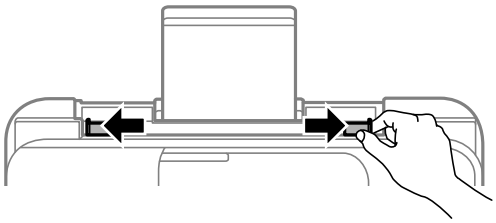

3. Load envelopes short edge first at the center of the paper support with the flap facing down.

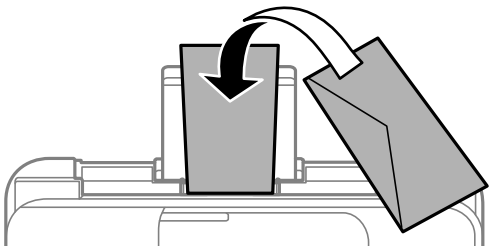

> ***Important:***
> *Do not load more than the maximum number of sheets specified for the envelopes.*

4. Slide the edge guides to the edges of the envelopes.

   ET-2870 Series/ET-2820 Series/L3280 Series/L3260 Series: Close the feeder guard after sliding the edge guides.

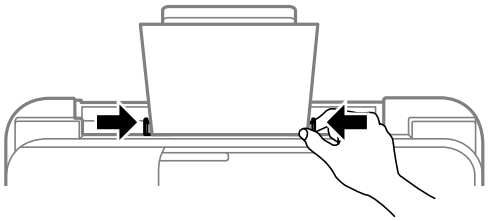

> ***Important:***
> *ET-2870 Series/ET-2820 Series/L3280 Series/L3260 Series: Do not place objects on the feeder guard. Doing so may prevent paper from feeding.*

5. Select the paper size and paper type.

6. Slide out the output tray.

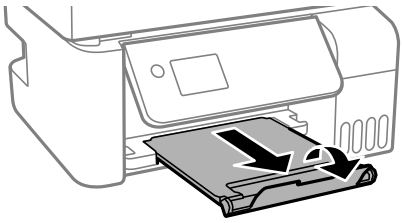

Related Information

➡ "Paper Size and Type Settings" on page 29

Loading Various Paper

Loading Pre-punched Paper

Load paper at the center arrow mark of the paper support with the printable side facing up.

Load a single sheet of defined size plain paper with binding holes at the left or right. Adjust the print position of your file to avoid printing over the holes.

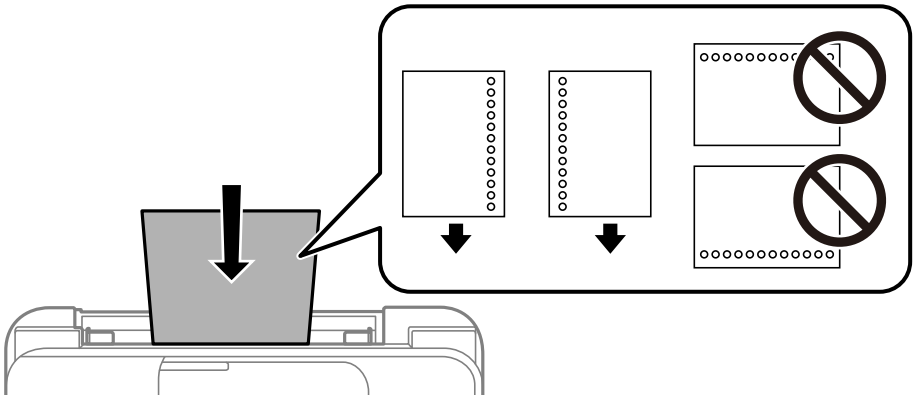

Loading Long Papers

When loading paper longer than legal size, store the paper support, and then flatten the leading edge of the paper.

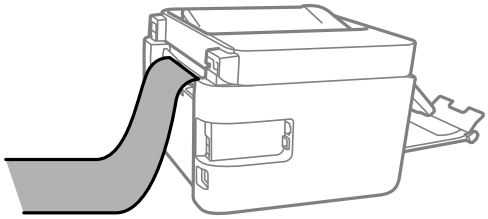

Placing Originals

Originals that are not Supported by the ADF. 37

Placing Originals on the ADF. 37

Placing Originals on the Scanner Glass. 38

Originals that are not Supported by the ADF

> ***Important:***
> *Do not feed photographs or valuable original artwork into the ADF. Misfeeding may wrinkle or damage the original. Scan these documents on the scanner glass instead.*

To prevent paper jams, avoid placing the following originals in the ADF. For these types, use the scanner glass.

- ❏ Originals that are torn, folded, wrinkled, deteriorated, or curled
- ❏ Originals with binder holes
- ❏ Originals held together with tape, staples, paper clips etc.
- ❏ Originals that have stickers or labels stuck to them
- ❏ Originals that are cut irregularly or not right angled
- ❏ Originals that are bound
- ❏ OHPs, thermal transfer paper, or carbon backs

Placing Originals on the ADF

1. Align the edges of the originals.
2. Pinch and slide out the ADF edge guide.

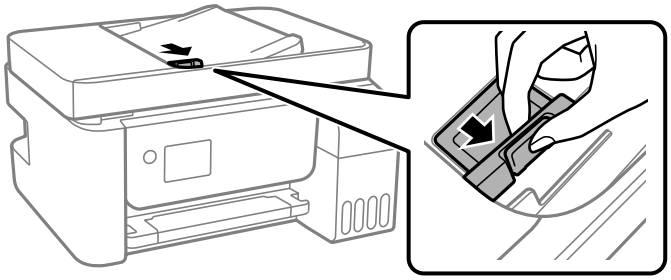

3. Place the originals face-up and short edge first in the ADF, and then slide the ADF edge guide to the edge of the originals.

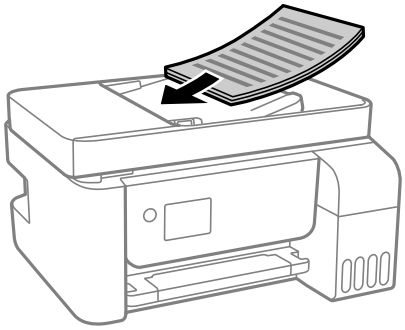

Important:

❏ *Do not load originals above the line indicated by the triangle symbol on the ADF.*

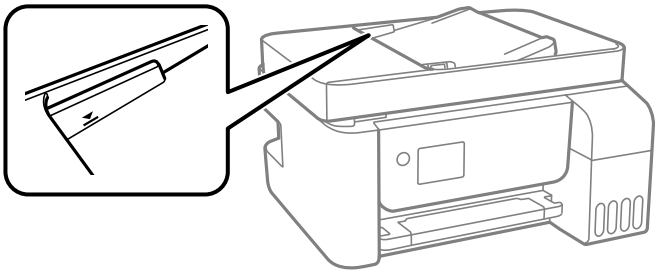

❏ *Do not add originals while scanning.*

Related Information

➡ "ADF Specifications" on page 270

Placing Originals on the Scanner Glass

1. Open the document cover.

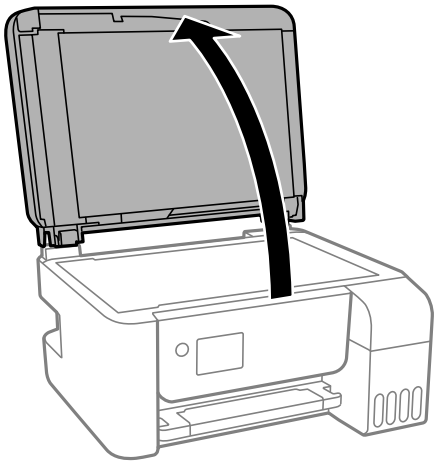

2. Remove any dust or stains on the surface of the scanner glass using a soft, dry, clean cloth.

   Note:
   If there is any trash or dirt on the scanner glass, the scanning range may expand to include it, so the image of the original may be displaced or reduced.

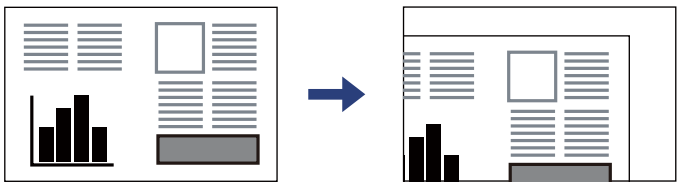

3. Place the original face-down and slide it to the corner mark.

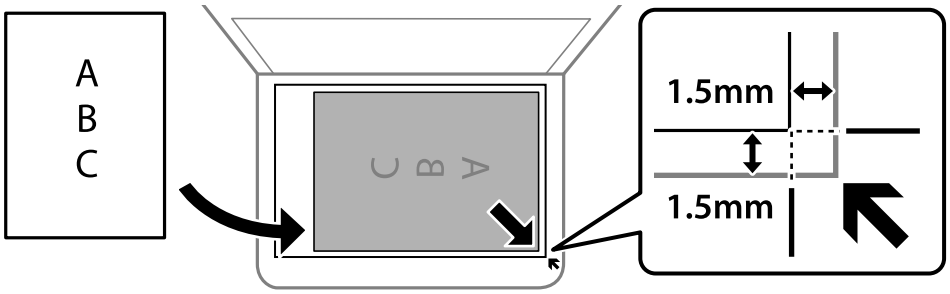

Note:
- *A range of 1.5 mm from the corner of the scanner glass is not scanned.*
- *When originals are placed in the ADF and on the scanner glass, priority is given to the originals in the ADF.*

4. Close the cover gently.

> ***Caution:***
> *Be careful not to trap your fingers when closing the document cover. Otherwise you may be injured.*

> ***Important:***
> - *When placing bulky originals such as books, prevent exterior light from shining directly onto the scanner glass.*
> - *Do not apply too much force to the scanner glass or the document cover. Otherwise, they may be damaged.*

5. Remove the originals after scanning.

Note:
If you leave the originals on the scanner glass for a long time, they may stick to the surface of the glass.

Related Information

➡ "Scanner Specifications" on page 269

Printing

Printing Documents. 41

Printing on Envelopes. 66

Printing Web Pages. 66

Printing Using a Cloud Service. 67

Printing Documents

Printing from a Computer - Windows

Printing Using Easy Settings

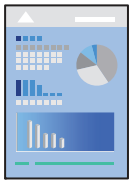

Note:
Operations may differ depending on the application. See the application's help for details.

1. Load paper in the printer.
   "Loading Paper in the Rear Paper Feeder" on page 31
2. Open the file you want to print.
3. Select **Print** or **Print Setup** from the **File** menu.
4. Select your printer.
5. Select **Preferences** or **Properties** to access the printer driver window.

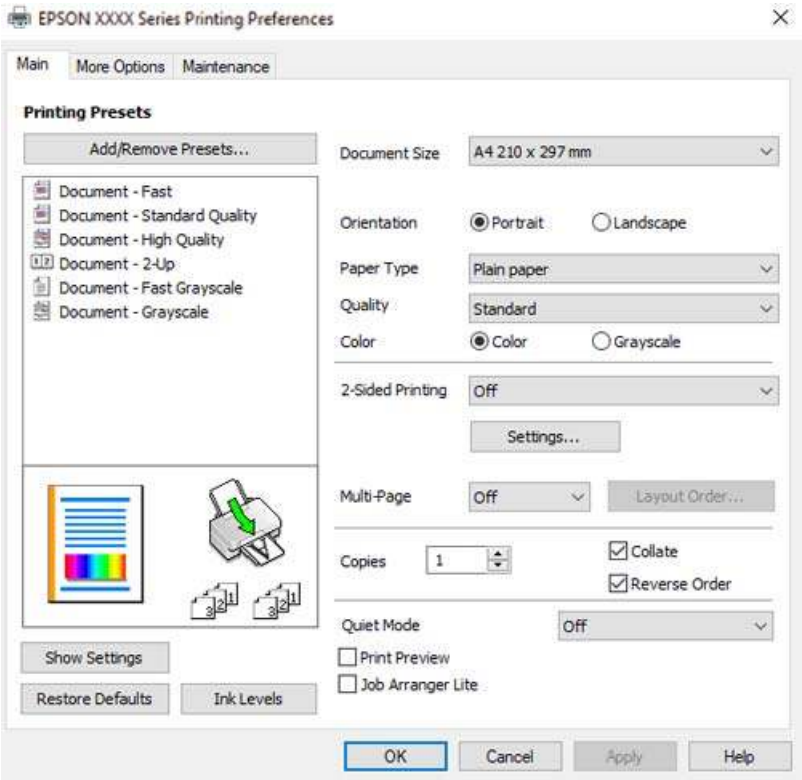

6. Change the settings as necessary.

   You can see the online help for explanations of the setting items. Right-clicking an item displays **Help**.

7. Click **OK** to close the printer driver window.

8. Click **Print**.

Related Information

➡ "Available Paper and Capacities" on page 245
➡ "List of Paper Type" on page 30

Adding Printing Presets for Easy Printing

If you create your own preset of frequently used print settings on the printer driver, you can print easily by selecting the preset from the list.

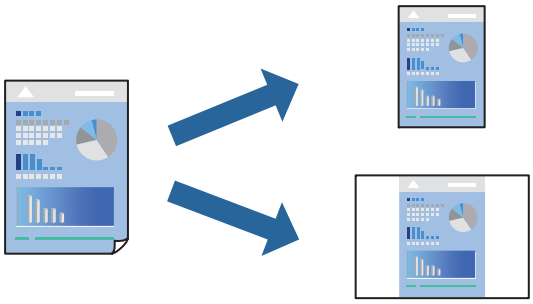

1. On the printer driver's **Main** or **More Options** tab, set each item (such as **Document Size** and **Paper Type**).

2. Click **Add/Remove Presets** in **Printing Presets**.

3. Enter a **Name** and, if necessary, enter a comment.

4. Click **Save**.

   Note:
   *To delete an added preset, click **Add/Remove Presets**, select the preset name you want to delete from the list, and then delete it.*

5. Click **Print**.

The next time you want to print using the same settings, select the registered setting name from **Printing Presets**, and click **OK**.

Related Information

➡ "Loading Paper in the Rear Paper Feeder" on page 31
➡ "Printing Using Easy Settings" on page 41

Printing on 2-Sides

The printer driver will automatically print odd pages and even pages separately. When the odd pages have been printed, turn over the paper according to the instructions and print the even pages.

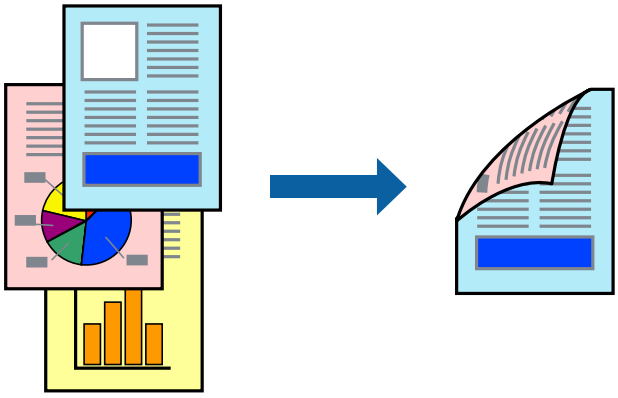

Note:

- *This feature is not available for borderless printing.*
- *If you do not use paper that is suitable for 2-sided printing, the print quality may decline and paper jams may occur.*
  "Paper for 2-Sided Printing" on page 247
- *Depending on the paper and the data, ink may bleed through to the other side of the paper.*
- *You cannot perform manual 2-sided printing unless **EPSON Status Monitor 3** is enabled. If **EPSON Status Monitor 3** is disabled, access the printer driver window, click **Extended Settings** on the **Maintenance** tab, and then select **Enable EPSON Status Monitor 3**.*
- *However, it may not be available when the printer is accessed over a network or is used as a shared printer.*

1. On the printer driver's **Main** tab, select the method of **2-Sided Printing**.
2. Click **Settings**, make the appropriate settings, and then click **OK**.
3. Set the other items on the **Main** and **More Options** tabs as necessary, and then click **OK**.
4. Click **Print**.

   When the first side has finished printing, a pop-up window is displayed on the computer. Follow the on-screen instructions.

Related Information

➡ "Available Paper and Capacities" on page 245
➡ "Loading Paper in the Rear Paper Feeder" on page 31
➡ "Printing Using Easy Settings" on page 41

Printing a Booklet

You can also print a booklet that can be created by re-ordering the pages and folding the printout.

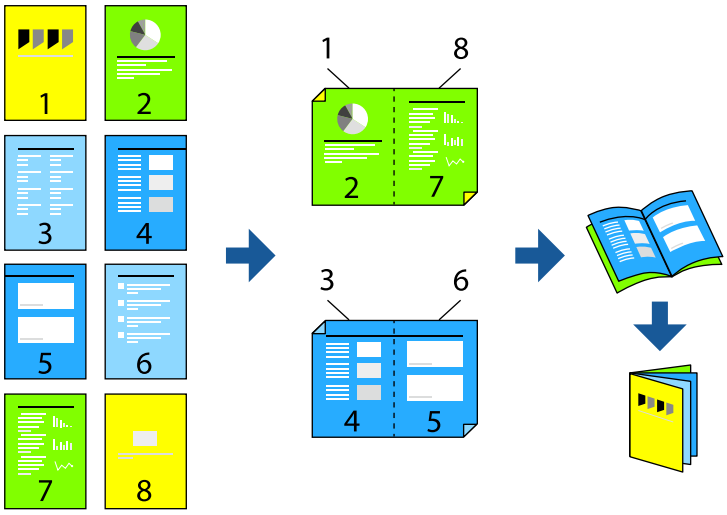

Note:

- *This feature is not available with borderless printing.*
- *If you do not use paper that is suitable for 2-sided printing, the print quality may decline and paper jams may occur.*
  "Paper for 2-Sided Printing" on page 247
- *Depending on the paper and the data, ink may bleed through to the other side of the paper.*
- *You cannot perform manual 2-sided printing unless **EPSON Status Monitor 3** is enabled. If **EPSON Status Monitor 3** is disabled, access the printer driver window, click **Extended Settings** on the **Maintenance** tab, and then select **Enable EPSON Status Monitor 3**.*
- *However, it may not be available when the printer is accessed over a network or is used as a shared printer.*

1. On the printer driver's **Main** tab, select the type of long-edge binding you want to use from **2-Sided Printing**.
2. Click **Settings**, select **Booklet**, and then select **Center Binding** or **Side Binding**.
   - Center Binding: Use this method when printing a small number of pages that can be stacked and easily folded in half.
   - Side Binding. Use this method when printing one sheet (four pages) at a time, folding each in half, and then putting them together in one volume.
3. Click **OK**.
4. Set the other items on the **Main** and **More Options** tabs as necessary, and then click **OK**.
5. Click **Print**.

Related Information

➡ "Available Paper and Capacities" on page 245

➡ "Loading Paper in the Rear Paper Feeder" on page 31

➡ "Printing Using Easy Settings" on page 41

Printing Several Pages on One Sheet

You can print several pages of data on a single sheet of paper.

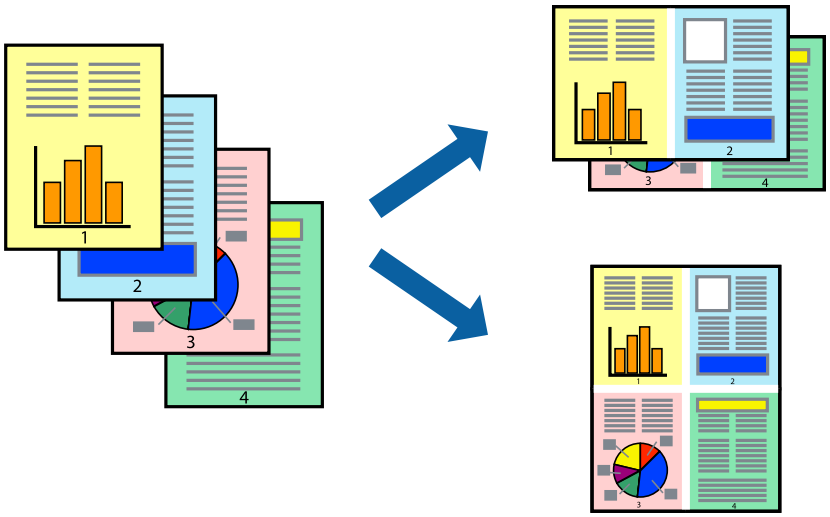

Note:
This feature is not available with borderless printing.

1. On the printer driver's **Main** tab, select **2-Up**, **4-Up**, **6-Up**, **8-Up**, **9-Up**, or **16-Up** as the **Multi-Page** setting.
2. Click **Layout Order**, make the appropriate settings, and then click **OK**.
3. Set the other items on the **Main** and **More Options** tabs as necessary, and then click **OK**.
4. Click **Print**.

Related Information

➡ "Loading Paper in the Rear Paper Feeder" on page 31
➡ "Printing Using Easy Settings" on page 41

Printing to Fit the Paper Size

Select the paper size you loaded in the printer as the Destination Paper Size setting.

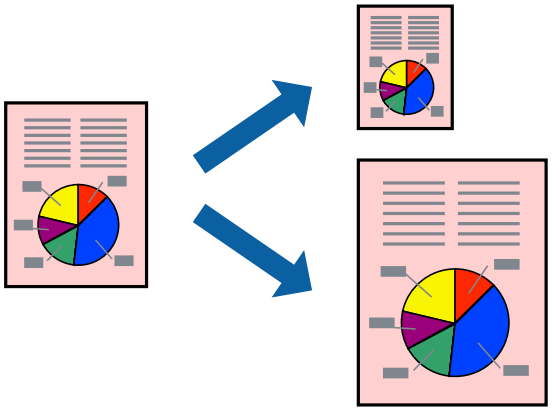

Note:
This feature is not available with borderless printing.

1. On the printer driver's **More Options** tab, make the following settings.
   - ❏ Document Size: Select the size of the paper you set in the application setting.
   - ❏ Output Paper: Select the paper size you loaded in the printer.
     Fit to Page is automatically selected.

   Note:
   *Click **Center** to print the reduced image in the middle of the paper.*

2. Set the other items on the **Main** and **More Options** tabs as necessary, and then click **OK**.

3. Click **Print**.

Related Information

➡ "Loading Paper in the Rear Paper Feeder" on page 31
➡ "Printing Using Easy Settings" on page 41

Printing a Reduced or Enlarged Document at any Magnification

You can reduce or enlarge the size of a document by a specific percentage.

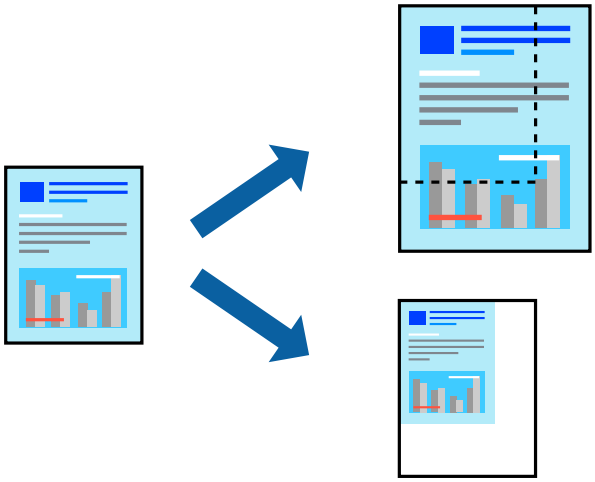

Note:
This feature is not available with borderless printing.

1. On the printer driver's **More Options** tab, select the document size from the **Document Size** setting.

2. Select the paper size you want to print on from the **Output Paper** setting.

3. Select **Reduce/Enlarge Document**, **Zoom to**, and then enter a percentage.

4. Set the other items on the **Main** and **More Options** tabs as necessary, and then click **OK**.

5. Click **Print**.

Related Information

➡ "Loading Paper in the Rear Paper Feeder" on page 31
➡ "Printing Using Easy Settings" on page 41

Printing One Image on Multiple Sheets for Enlargement (Creating a Poster)

This feature allows you to print one image on multiple sheets of paper. You can create a larger poster by taping them together.

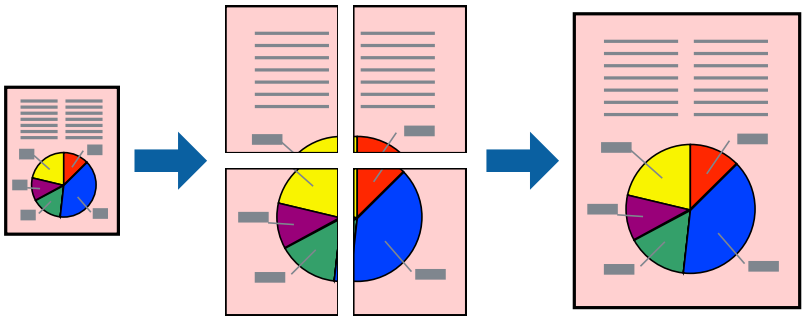

1. On the printer driver's **Main** tab, select **2x1 Poster**, **2x2 Poster**, **3x3 Poster**, or **4x4 Poster** as the **Multi-Page** setting.

2. Click **Settings**, make the appropriate settings, and then click **OK**.

   Note:
   Print Cutting Guides *allows you to print a cutting guide.*

3. Set the other items on the **Main** and **More Options** tabs as necessary, and then click **OK**.

4. Click **Print**.

Related Information

➡ "Loading Paper in the Rear Paper Feeder" on page 31
➡ "Printing Using Easy Settings" on page 41

Making Posters Using Overlapping Alignment Marks

Here is an example of how to make a poster when **2x2 Poster** is selected, and **Overlapping Alignment Marks** is selected in **Print Cutting Guides**.

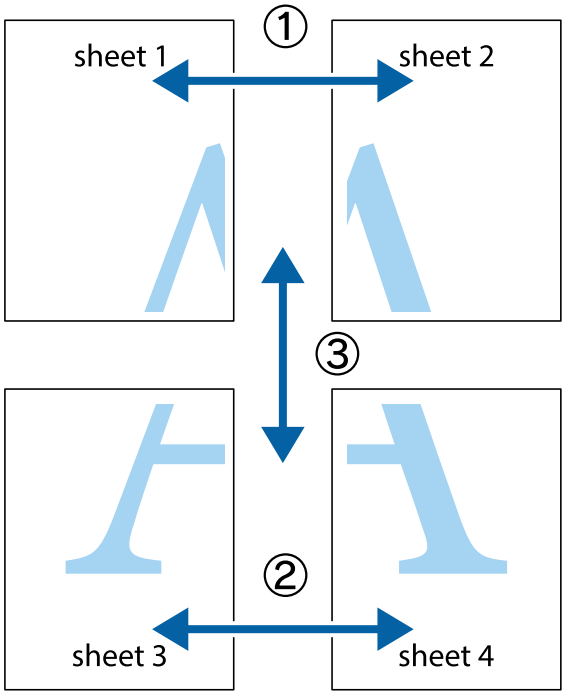

1. Prepare Sheet 1 and Sheet 2. Cut off the margins of Sheet 1 along the vertical blue line through the center of the top and bottom cross marks.

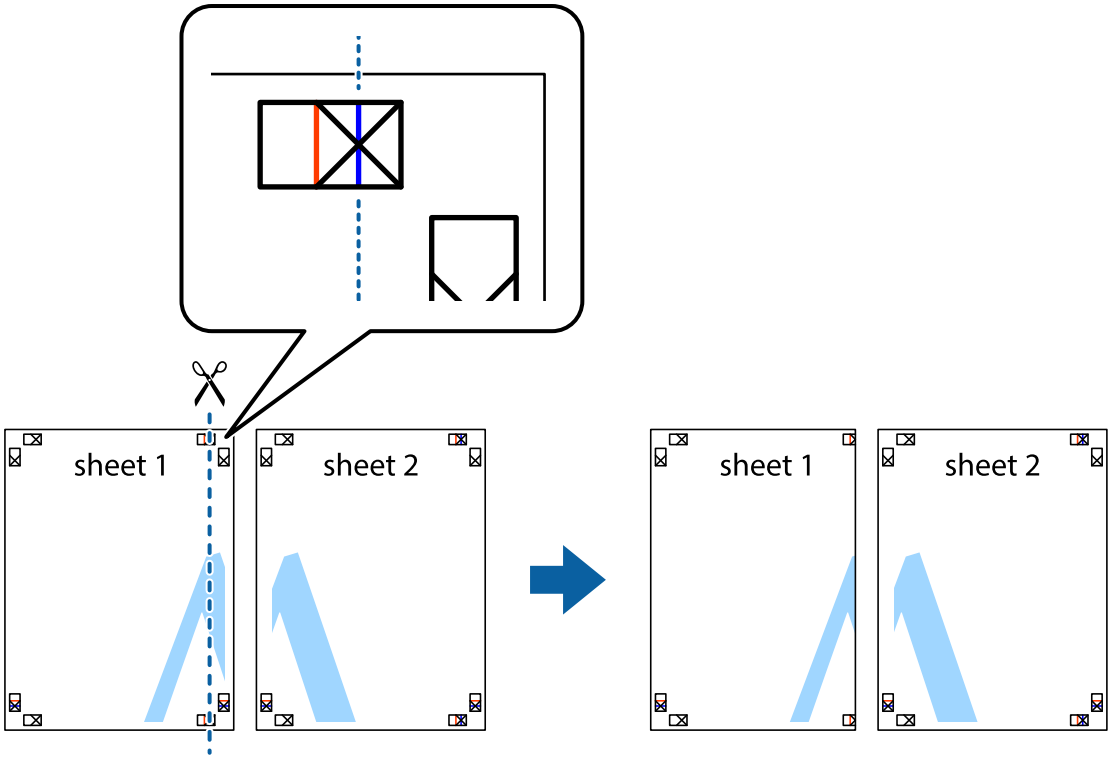

2. Place the edge of Sheet 1 on top of Sheet 2 and align the cross marks, then temporarily tape the two sheets together from the back.

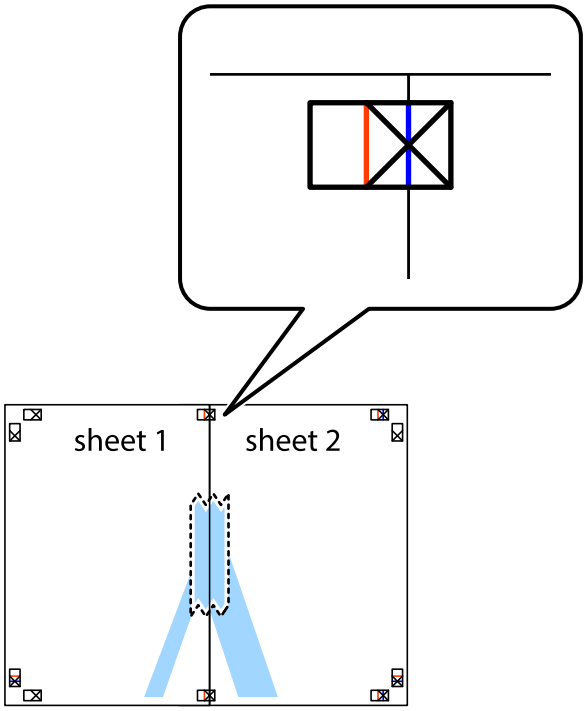

3. Cut the taped sheets in two along the vertical red line through the alignment markers (this time, the line to the left of the cross marks).

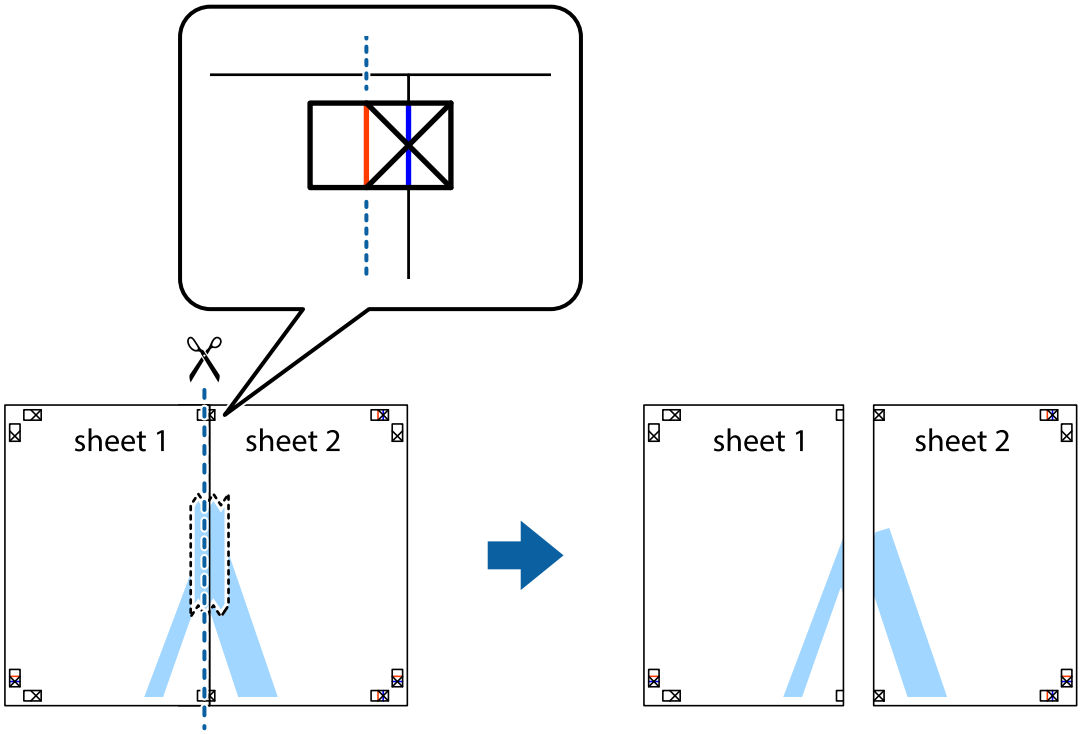

4. Tape the sheets together from the back.

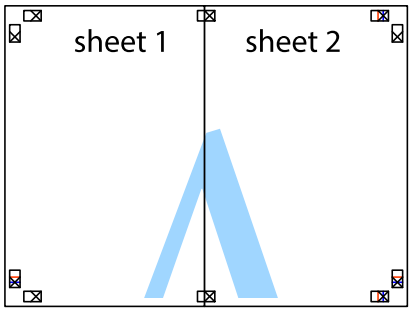

5. Repeat steps 1 to 4 to tape Sheet 3 and Sheet 4 together.

6. Cut off the margins of Sheet 1 and Sheet 2 along the horizontal blue line through the center of the left and right side cross marks.

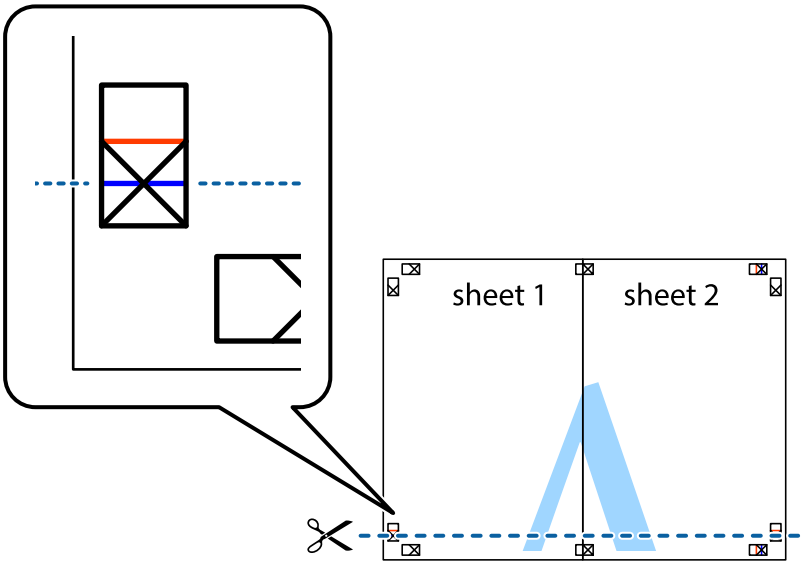

7. Place the edge of Sheet 1 and Sheet 2 on top of Sheet 3 and Sheet 4 and align the cross marks, and then temporarily tape them together from the back.

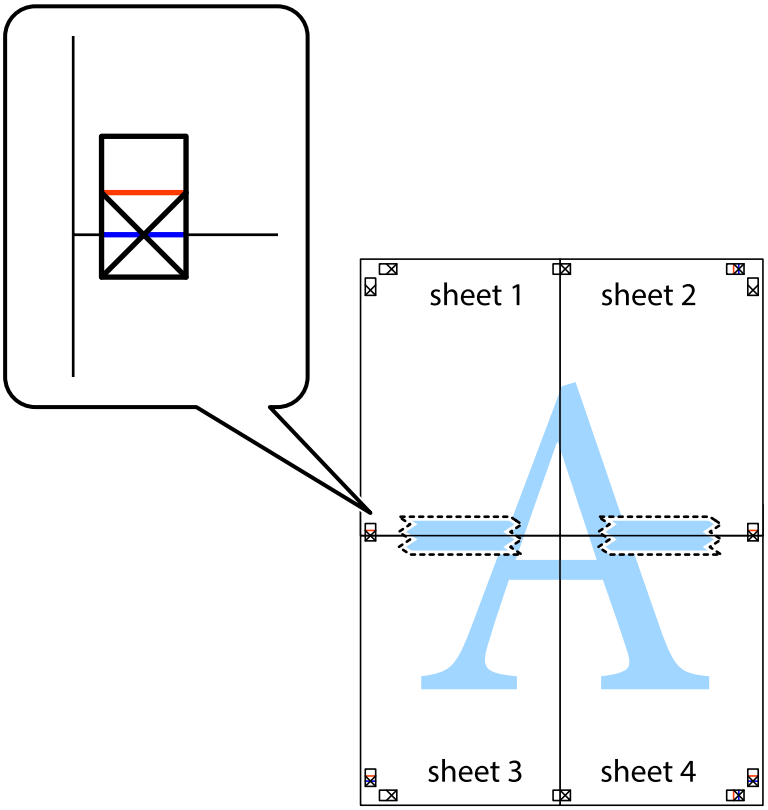

8. Cut the taped sheets in two along the horizontal red line through the alignment markers (this time, the line above the cross marks).

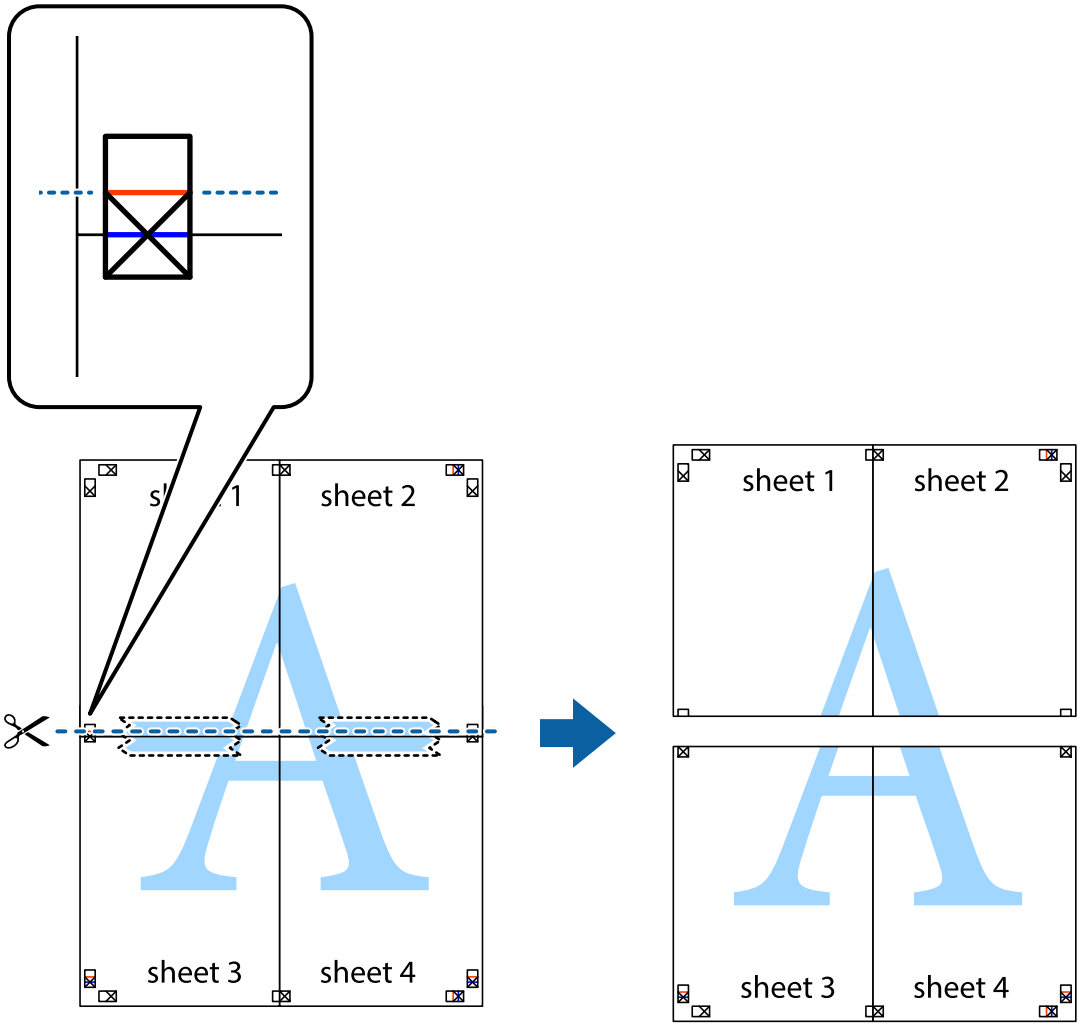

9. Tape the sheets together from the back.

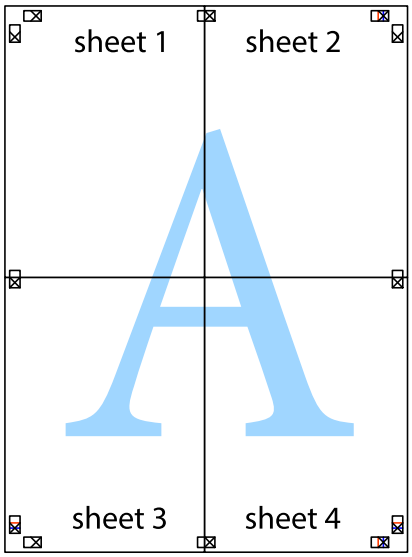

10. Cut off the remaining margins along the outer guide.

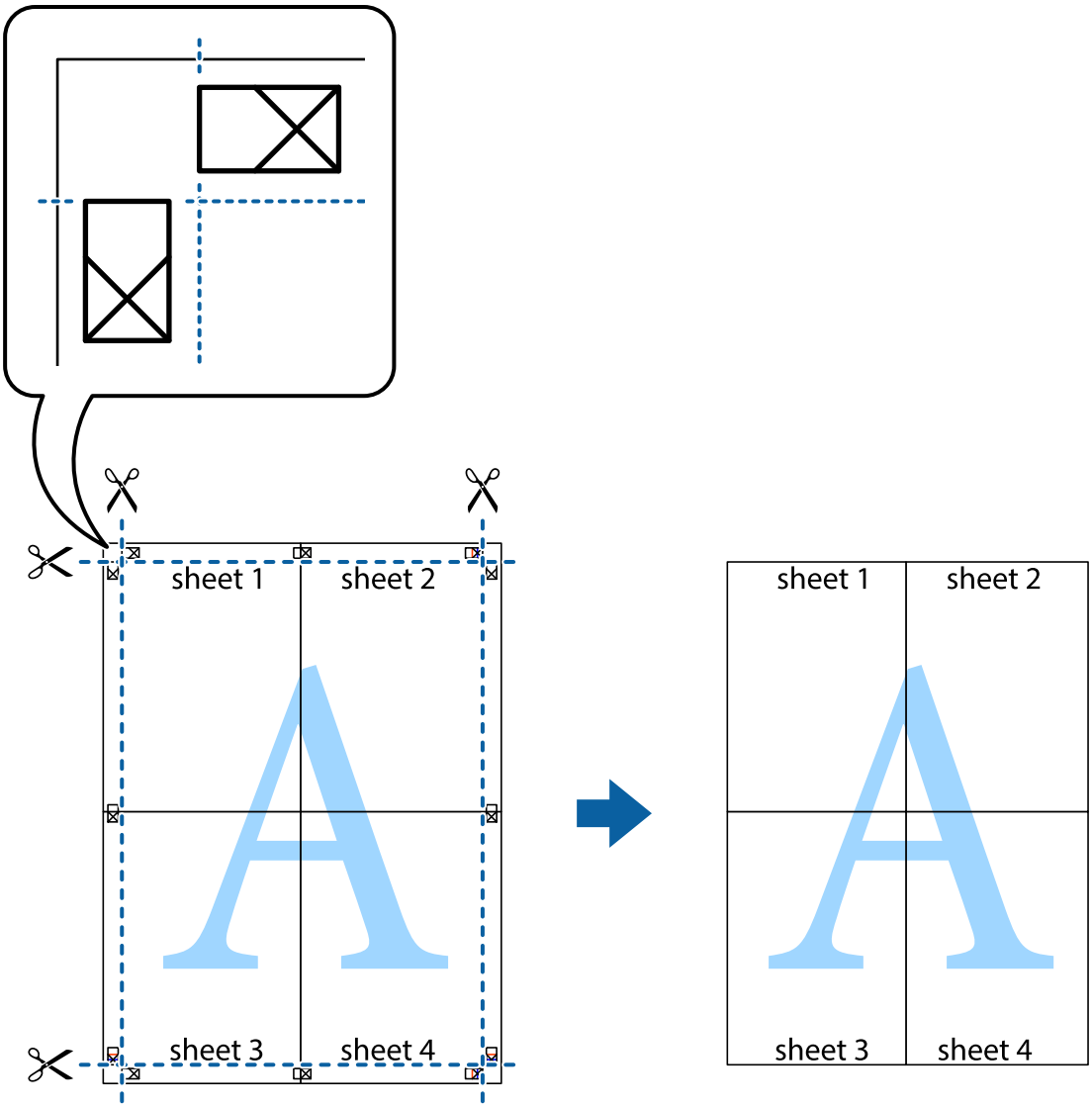

Printing with a Header and Footer

You can print information such as a user name and printing date in headers or footers.

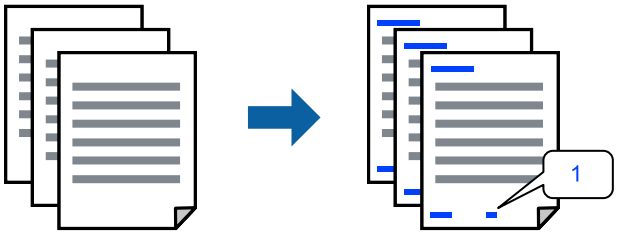

1. On the printer driver's **More Options** tab, click **Watermark Features**, and then select **Header/Footer**.

2. **Settings**, and then select the items you want to print and then click OK.

   Note:
   - ❏ *To specify the first page number, select **Page Number** from the position you want to print in the header or footer, and then select the number in **Starting number**.*
   - ❏ *If you want to print text in the header or footer, select the position you want to print, and then select **Text**. Enter the text you want to print in the text input field.*

3. Set the other items on the **Main** and **More Options** tabs as necessary, and then click **OK**.

4. Click **Print**.

Related Information

➡ "Loading Paper in the Rear Paper Feeder" on page 31
➡ "Printing Using Easy Settings" on page 41

Printing a Watermark

You can print a watermark such as "Confidential" or an anti-copy pattern on your printouts. If you print with an anti-copy pattern, the hidden letters appear when photocopied in order to distinguish the original from the copies.

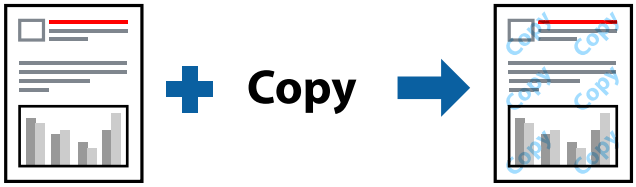

Anti-Copy Pattern is available under the following conditions:

- ❏ Paper Type: Plain paper
- ❏ Borderless: Not selected
- ❏ Quality: Standard
- ❏ 2-Sided Printing: Off, Manual (Long-edge binding), or Manual (Short-edge binding)
- ❏ Color Correction: Automatic
- ❏ Short Grain Paper: Not selected

Note:
You can also add your own watermark or anti-copy pattern.

1. On the printer driver's **More Options** tab, click **Watermark Features**, and then select Anti-Copy Pattern or Watermark.

2. Click **Settings** to change details such as the size, density, or position of the pattern or the mark.

3. Set the other items on the **Main** and **More Options** tabs as necessary, and then click **OK**.

4. Click **Print**.

Related Information

➡ "Loading Paper in the Rear Paper Feeder" on page 31
➡ "Printing Using Easy Settings" on page 41

Printing Multiple Files Together

Job Arranger Lite allows you to combine several files created by different applications and print them as a single print job. You can specify the print settings for combined files, such as multi-page layout, and 2-sided printing.

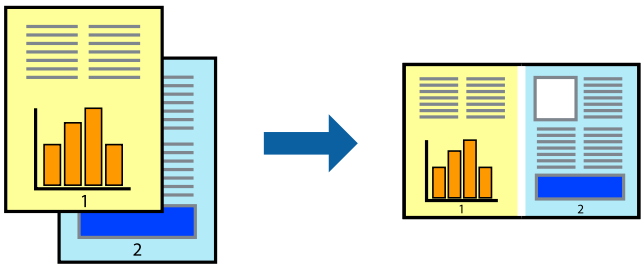

1. On the printer driver's **Main** tab, select **Job Arranger Lite**.

2. Click **Print**.

   When you start printing, the Job Arranger Lite window is displayed.

3. With the Job Arranger Lite window opened, open the file that you want to combine with the current file, and then repeat the above steps.

4. When you select a print job added to Print Project Lite in the Job Arranger Lite window, you can edit the page layout.

5. Click **Print** from the **File** menu to start printing.

   Note:
   *If you close the Job Arranger Lite window before adding all the print data to the Print Project, the print job you are currently working on is canceled. Click **Save** from the **File** menu to save the current job. The extension of the saved files is "ecl".*

   *To open a Print Project, click **Job Arranger Lite** on the printer driver's **Maintenance** tab to open the Job Arranger Lite window. Next, select **Open** from the **File** menu to select the file.*

Related Information

➡ "Loading Paper in the Rear Paper Feeder" on page 31
➡ "Printing Using Easy Settings" on page 41

Printing Using the Color Universal Print Feature

You can enhance the visibility of texts and images in printouts.

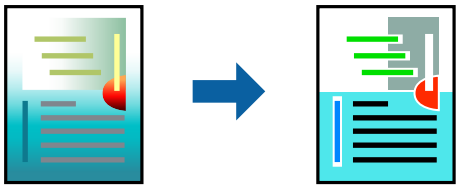

Color Universal Print is only available when the following settings are selected.

❏ Paper Type: Plain paper

❏ Quality: **Standard** or a higher quality

❏ Color: **Color**

❏ Applications: Microsoft® Office 2007 or later

❏ Text Size: 96 pts or smaller

1. On the printer driver's **More Options** tab, click **Image Options** in the **Color Correction** setting.
2. Select an option from the **Color Universal Print** setting.
3. **Enhancement Options** to make further settings.
4. Set the other items on the **Main** and **More Options** tabs as necessary, and then click **OK**.
5. Click **Print**.

   Note:

   ❏ *Certain characters may be altered by patterns, such as "+" appearing as "±".*

   ❏ *Application-specific patterns and underlines may alter content printed using these settings.*

   ❏ *Print quality may decrease in photos and other images when using Color Universal Print settings.*

   ❏ *Printing is slower when using Color Universal Print settings.*

Related Information

➡ "Loading Paper in the Rear Paper Feeder" on page 31

➡ "Printing Using Easy Settings" on page 41

Adjusting the Print Color

You can adjust the colors used in the print job. These adjustments are not applied to the original data.

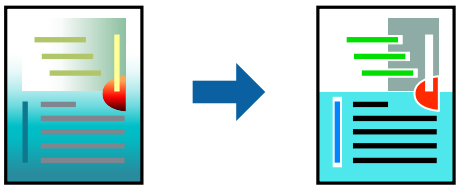

PhotoEnhance produces sharper images and more vivid colors by automatically adjusting the contrast, saturation, and brightness of the original image data.

Note:
PhotoEnhance *adjusts the color by analyzing the location of the subject. Therefore, if you have changed the location of the subject by reducing, enlarging, cropping, or rotating the image, the color may change unexpectedly. Selecting the borderless setting also changes the location of the subject resulting in changes in color. If the image is out of focus, the tone may be unnatural. If the color is changed or becomes unnatural, print in a mode other than* ***PhotoEnhance****.*

1. On the printer driver's **More Options** tab, select the method of color correction from the **Color Correction** setting.
   - ❏ Automatic: This setting automatically adjusts the tone to match the paper type and print quality settings.
   - ❏ Custom: Click **Advanced**, you can make your own settings.
2. Set the other items on the **Main** and **More Options** tabs as necessary, and then click **OK**.
3. Click **Print**.

Related Information

➡ "Loading Paper in the Rear Paper Feeder" on page 31
➡ "Printing Using Easy Settings" on page 41

Printing to Emphasize Thin Lines

You can thicken thin lines that are too thin to print.

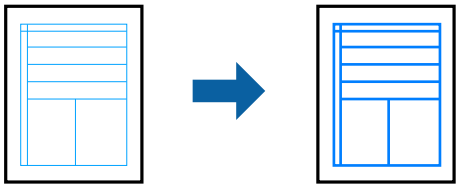

1. On the printer driver's **More Options** tab, click **Image Options** in the **Color Correction** setting.
2. Select **Emphasize Thin Lines**.
3. Set the other items on the **Main** and **More Options** tabs as necessary, and then click **OK**.
4. Click **Print**.

Related Information

➡ "Loading Paper in the Rear Paper Feeder" on page 31
➡ "Printing Using Easy Settings" on page 41

Printing Clear Bar Codes

You can print a bar code clearly and make it easy to scan. Only enable this feature if the bar code you printed cannot be scanned.

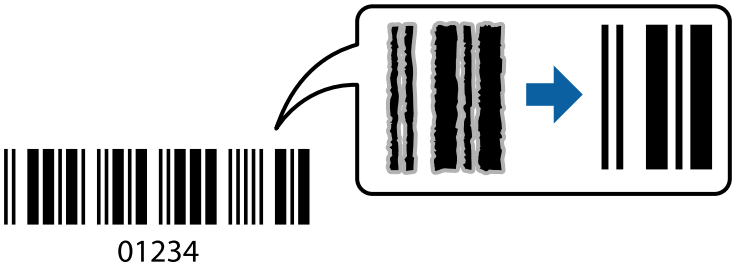

You can use this feature under the following conditions.

❏ Paper Type: Plain paper, Envelope

❏ Quality: **Standard**

1. On the printer driver's **Maintenance** tab, click **Extended Settings**, and then select **Barcode mode**.

2. Set the other items on the **Main** and **More Options** tabs as necessary, and then click **OK**.

3. Click **Print**.

   Note:
   Deblurring may not always be possible depending on the circumstances.

Related Information

➡ "Loading Paper in the Rear Paper Feeder" on page 31
➡ "Printing Using Easy Settings" on page 41

Printing from a Computer - Mac OS

Printing Using Easy Settings

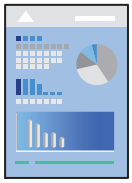

Note:
Operations and screens differ depending on the application. See the application's help for details.

1. Load paper in the printer .

2. Open the file you want to print.

3. Select **Print** from the **File** menu or another command to access the print dialog.

   If necessary, click **Show Details** or ▼ to expand the print window.

4. Select your printer.

5. Select **Print Settings** from the pop-up menu.

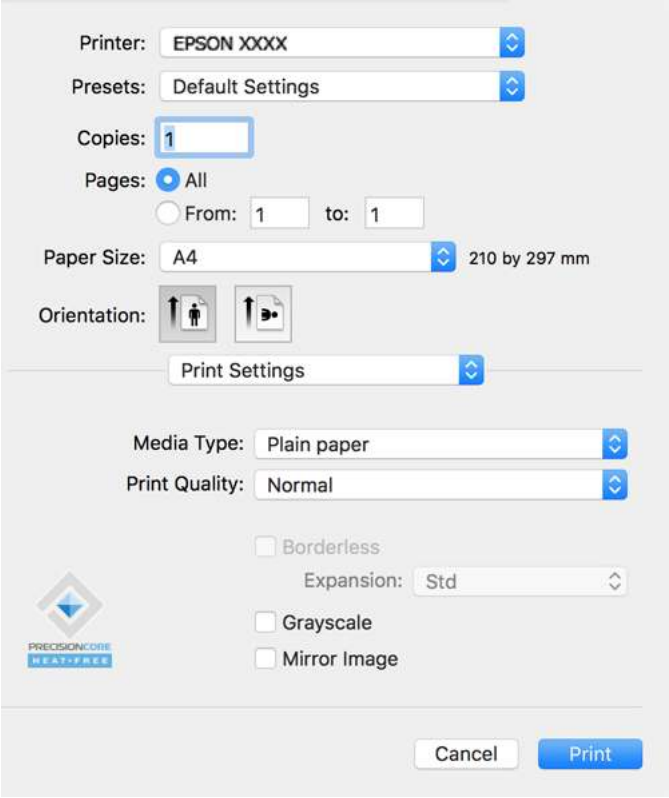

6. Change the settings as necessary.

7. Click **Print**.

Related Information

➡ "Available Paper and Capacities" on page 245
➡ "List of Paper Type" on page 30

Adding Printing Presets for Easy Printing

If you create your own preset of frequently used print settings on the printer driver, you can print easily by selecting the preset from the list.

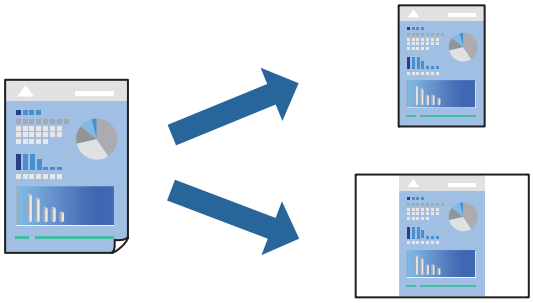

1. Set each item such as **Print Settings** and **Layout** (**Paper Size**, **Media Type**, and so on).
2. Click **Presets** to save the current settings as a preset.
3. Click **OK**.

   Note:
   *To delete an added preset, click **Presets** > **Show Presets**, select the preset name you want to delete from the list, and then delete it.*

4. Click **Print**.

The next time you want to print using the same settings, select the registered preset name from the **Presets**.

Related Information

➡ "Loading Paper in the Rear Paper Feeder" on page 31
➡ "Printing Using Easy Settings" on page 58

Printing Several Pages on One Sheet

You can print several pages of data on a single sheet of paper.

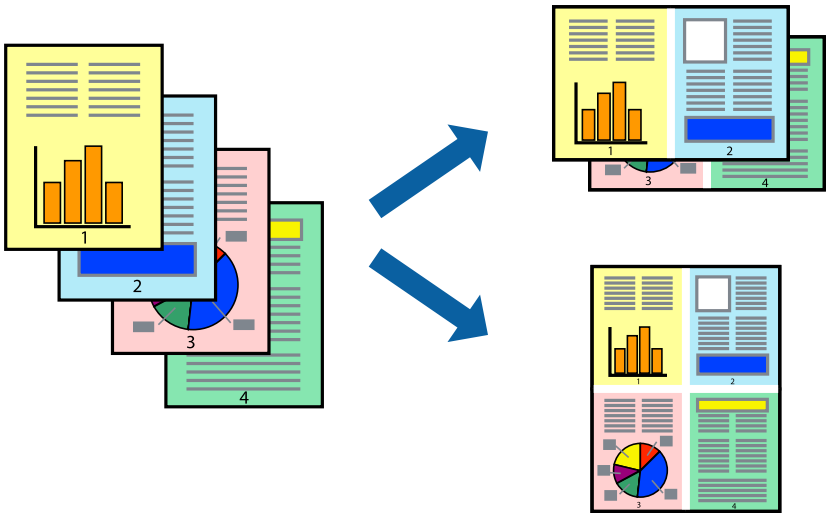

1. Select **Layout** from the pop-up menu.
2. Set the number of pages in **Pages per Sheet**, the **Layout Direction** (page order), and **Border**.
3. Set the other items as necessary.
4. Click **Print**.

Related Information

➡ "Loading Paper in the Rear Paper Feeder" on page 31
➡ "Printing Using Easy Settings" on page 58

Printing to Fit the Paper Size

Select the paper size you loaded in the printer as the Destination Paper Size setting.

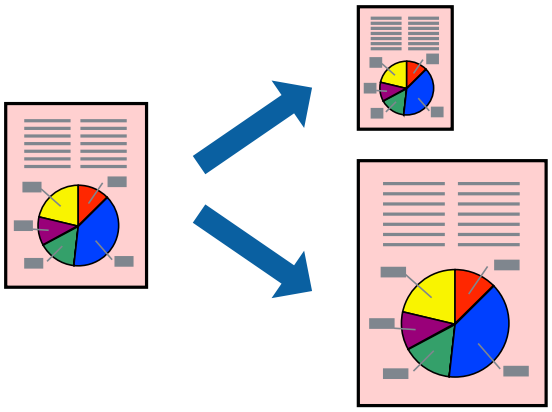

1. Select the size of the paper you set in the application as the **Paper Size** setting.
2. Select **Paper Handling** from the pop-up menu.
3. Select **Scale to fit paper size**.
4. Select the paper size you loaded in the printer as the **Destination Paper Size** setting.
5. Set the other items as necessary.
6. Click **Print**.

Related Information

➡ "Loading Paper in the Rear Paper Feeder" on page 31
➡ "Printing Using Easy Settings" on page 58

Printing a Reduced or Enlarged Document at any Magnification

You can reduce or enlarge the size of a document by a specific percentage.

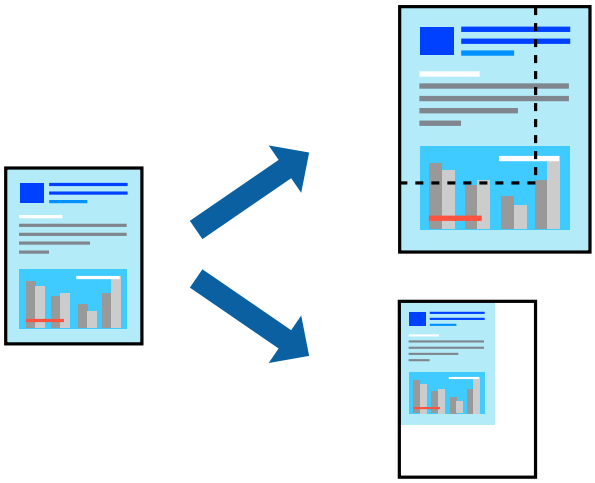

1. Select **Print** from the **File** menu or another command to access the print dialog.
2. Select **Page Setup** from the **File** menu of the application.
3. Select **Printer**, **Paper Size**, enter percentage in **Scale**, and then click **OK**.

   Note:
   *Select the paper size you set in the application as the **Paper Size** setting.*
4. Set the other items as necessary.
5. Click **Print**.

Related Information

➡ "Loading Paper in the Rear Paper Feeder" on page 31
➡ "Printing Using Easy Settings" on page 58

Adjusting the Print Color

You can adjust the colors used in the print job. These adjustments are not applied to the original data.

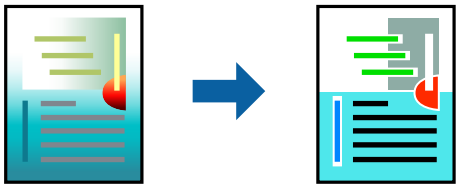

PhotoEnhance produces sharper images and more vivid colors by automatically adjusting the contrast, saturation, and brightness of the original image data.

Note:
PhotoEnhance *adjusts the color by analyzing the location of the subject. Therefore, if you have changed the location of the subject by reducing, enlarging, cropping, or rotating the image, the color may change unexpectedly. Selecting the borderless setting also changes the location of the subject resulting in changes in color. If the image is out of focus, the tone may be unnatural. If the color is changed or becomes unnatural, print in a mode other than* ***PhotoEnhance****.*

1. Select **Color Matching** from the pop-up menu, and then select **EPSON Color Controls**.
2. Select **Color Options** from the pop-up menu, and then select one of the available options.
3. Click the arrow next to **Advanced Settings** and make the appropriate settings.
4. Set the other items as necessary.
5. Click **Print**.

Related Information

➡ "Loading Paper in the Rear Paper Feeder" on page 31
➡ "Printing Using Easy Settings" on page 58

Printing Documents from Smart Devices (iOS)

You can print documents from a smart device such as a smartphone or tablet.

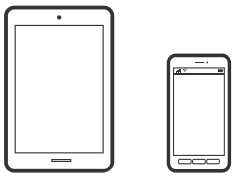

Printing Documents Using Epson Smart Panel

Note:
Operations may differ depending on the device.

1. Set up your printer for wireless printing.
2. If Epson Smart Panel is not installed, install it.
   "Application for Easily Operating the Printer from a Smart device (Epson Smart Panel)" on page 252
3. Connect your smart device to the wireless router.
4. Start Epson Smart Panel.
5. Select the print document menu on the home screen.
6. Select the document you want to print.
7. Start printing.

Using AirPrint

AirPrint enables instant wireless printing from iPhone, iPad, iPod touch, and Mac without the need to install drivers or download software.

Works with Apple AirPrint

Note:
If you disabled paper configuration messages on your product control panel, you cannot use AirPrint. See the link below to enable the messages, if necessary.

1. Load paper in your product.
2. Set up your product for wireless printing. See the link below.

   http://epson.sn

3. Connect your Apple device to the same wireless network that your product is using.
4. Print from your device to your product.

   Note:
   For details, see the AirPrint page on the Apple website.

Printing Documents from Smart Devices (Android)

You can print documents from a smart device such as a smartphone or tablet.

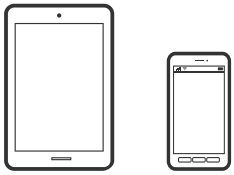

Printing Documents Using Epson Smart Panel

Note:
Operations may differ depending on the device.

1. Set up your printer for wireless printing.
2. If Epson Smart Panel is not installed, install it.

   "Application for Easily Operating the Printer from a Smart device (Epson Smart Panel)" on page 252

3. Connect your smart device to the wireless router.
4. Start Epson Smart Panel.
5. Select the print document menu on the home screen.
6. Select the document you want to print.

7. Start printing.

Printing Documents Using Epson Print Enabler

You can wirelessly print your documents, emails, photos, and web pages right from your Android phone or tablet (Android v4.4 or later). With a few taps, your Android device will discover an Epson printer that is connected to the same wireless network.

Note:
Operations may differ depending on the device.

1. Set up your printer for wireless printing.
2. On your Android device, install the Epson Print Enabler plug-in from Google Play.
3. Connect your Android device to the same wireless network as your printer.
4. Go to **Settings** on your Android device, select **Printing**, and then enable Epson Print Enabler.
5. From an Android application such as Chrome, tap the menu icon and print whatever is on the screen.

   Note:
   *If you do not see your printer, tap **All Printers** and select your printer.*

Printing Using Mopria Print Service

Mopria Print Service enables instant wireless printing from Android smart phones or tablets.

1. Install Mopria Print Service from Google Play.
2. Load paper in the printer.
3. Set up your printer for wireless printing. See the link below.

   http://epson.sn
4. Connect your Android device to the same wireless network that your printer is using.
5. Print from your device to your printer.

   Note:
   For more details, access the Mopria Web site at https://mopria.org.

Related Information

➡ "Loading Paper in the Rear Paper Feeder" on page 31

Printing on Envelopes

Printing on Envelopes from a Computer (Windows)

1. Load envelopes in the printer.
   "Loading Envelopes in the Rear Paper Feeder" on page 33
2. Open the file you want to print.
3. Access the printer driver window.
4. Select the envelope size from **Document Size** on the **Main** tab, and then select **Envelope** from **Paper Type**.
5. Set the other items on the **Main** and **More Options** tabs as necessary, and then click **OK**.
6. Click **Print**.

Printing on Envelopes from a Computer (Mac OS)

1. Load envelopes in the printer.
   "Loading Envelopes in the Rear Paper Feeder" on page 33
2. Open the file you want to print.
3. Select **Print** from the **File** menu or another command to access the print dialog.
4. Select the size as the **Paper Size** setting.
5. Select **Print Settings** from the pop-up menu.
6. Select **Envelope** as the **Media Type** setting.
7. Set the other items as necessary.
8. Click **Print**.

Printing Web Pages

Printing Web Pages from a Computer

Epson Photo+ allows you to display web pages, crop the specified area, and then edit and print them. See the application's help for details.

Printing Web Pages from Smart Devices

Note:
Operations may differ depending on the device.

1. Set up your printer for wireless printing.
2. If Epson Smart Panel is not installed, install it.
   "Application for Easily Operating the Printer from a Smart device (Epson Smart Panel)" on page 252
3. Connect your smart device to the same wireless network as your printer.
4. Open the web page you want to print in your web browser app.
5. Tap **Share** from the menu of the web browser application.
6. Select **Smart Panel**.
7. Tap **Print**.

Printing Using a Cloud Service

By using Epson Connect service available on the Internet, you can print from your smartphone, tablet PC, or laptop, anytime and practically anywhere. To use this service, you need to register the user and the printer in Epson Connect.

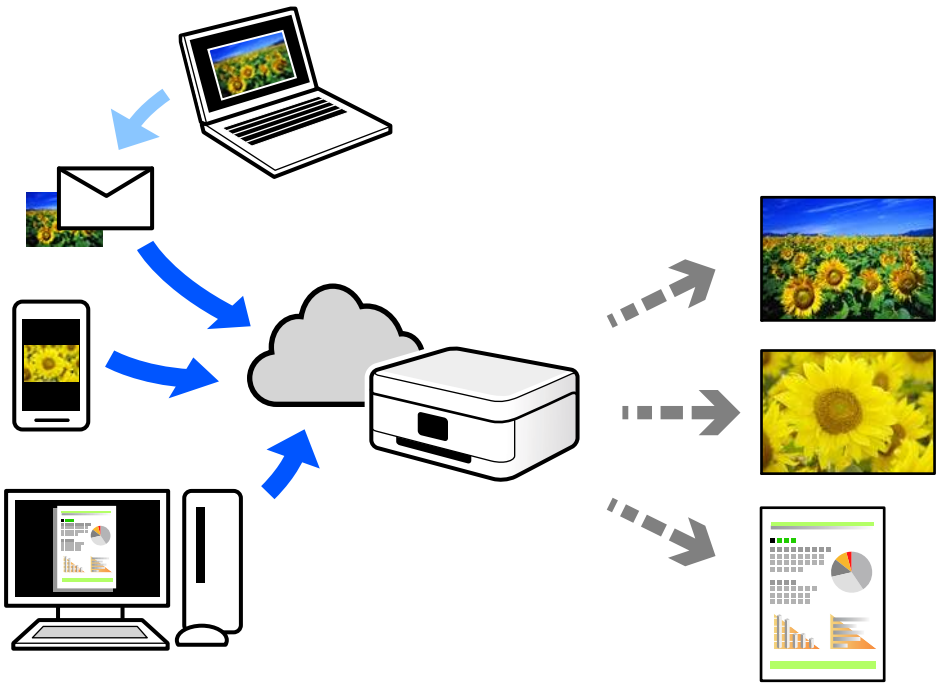

The features available on the Internet are as follows.

❏ Email Print

When you send an email with attachments such as documents or images to an email address assigned to the printer, you can print that email and the attachments from remote locations such as your home or office printer.

❏ Epson iPrint

This Application is for iOS and Android, and allows you to print or scan from a smartphone or tablet. You can print documents, images, and web sites by sending them directly to a printer on the same wireless LAN.

❏ Remote Print Driver

This is a shared driver supported by Remote Print Driver. When printing using a printer in a remote location, you can print by changing the printer on the usual applications window.

See the Epson Connect web portal for details on how to setup or print.

https://www.epsonconnect.com/

http://www.epsonconnect.eu (Europe only)

Registering to Epson Connect Service from the Control Panel

Follow the steps below to register the printer.

1. Select **Settings** on the control panel.

   To select an item, use the ▲▼◀▶ buttons, and then press the OK button.

2. Select **Epson Connect Services** > **Register/Delete** to print the registration sheet.

3. Follow the instructions on the registration sheet to register the printer.

Copying

Available Copying Methods. 70

Menu Options for Copying. 76

Available Copying Methods

Place the originals on the scanner glass or the ADF, and then select the **Copy** menu on the home screen.

Copying Originals

This section explains how to use the **Copy** menu on the control panel to copy originals.

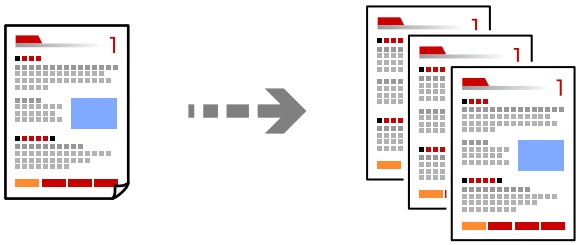

1. Load paper in the printer.

   "Loading Paper in the Rear Paper Feeder" on page 31

2. Place the originals.

   If you want to copy multiple originals, place all of the originals on the ADF.

   "Placing Originals on the Scanner Glass" on page 38

   "Placing Originals on the ADF" on page 37

3. Select **Copy** on the home screen.

   To select an item, use the ▲▼◀▶ buttons, and then press the OK button.

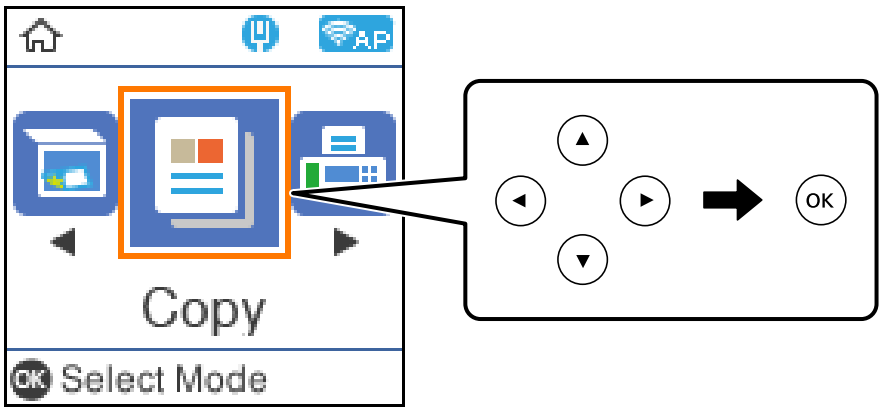

4. Set the number of copies.

5. Select color copy or monochrome copy.

6. Press the OK button to display and check the print settings, and then change the settings as necessary.

   To change the settings, press the ▼ button, specify the setting menu using the ▲ ▼ buttons, and then change the settings using the ◀ ▶ buttons. When you have finished, press the OK button.

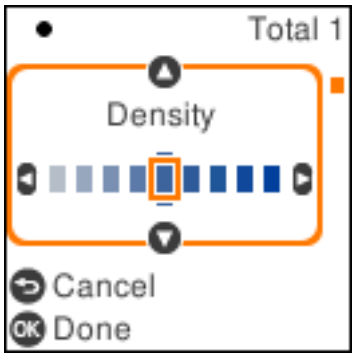

7. Press the ⊡ button.

Copying by Enlarging or Reducing

You can copy originals at a specified magnification.

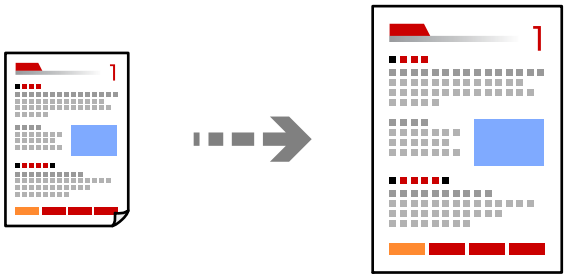

1. Place the originals.

   If you want to copy multiple originals, place all of the originals on the ADF.

   "Placing Originals on the Scanner Glass" on page 38
   "Placing Originals on the ADF" on page 37

2. Select **Copy** on the home screen.

   To select an item, use the ▲ ▼ ◀ ▶ buttons, and then press the OK button.

3. Set the number of copies.

4. Select color copy or monochrome copy.

5. Press the OK button, and then press the ▼ button.

6. Specify **Reduce/Enlarge** using the ▲▼ buttons, and then change the magnification using the ◀▶ buttons.

   Note:
   *If you want to copy by reducing or enlarging the size of a document by a specific percentage, select **Custom** as the **Reduce/Enlarge** setting, press the ▼ button, and then press the ▶ button. Specify the amount of enlargement or reduction.*

7. Press the OK button, and then press the ⊡ button.

Copying Multiple Originals onto One Sheet

You can copy the multiple originals onto a single sheet.

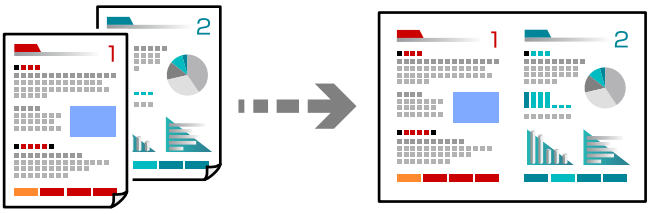

1. Place all originals face up in the ADF.

   "Placing Originals on the ADF" on page 37

   Place them in the direction shown in the illustration.

   ❏ Portrait Originals

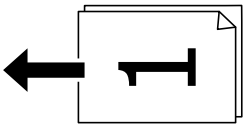

   ❏ Landscape Originals

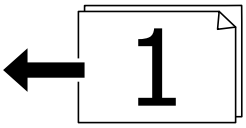

> ***Important:***
> *If you want to copy originals that are not supported by the ADF, use the scanner glass.*
> *"Originals that are not Supported by the ADF" on page 37*

   Note:
   You can also place the originals on the scanner glass.

❏ Portrait originals

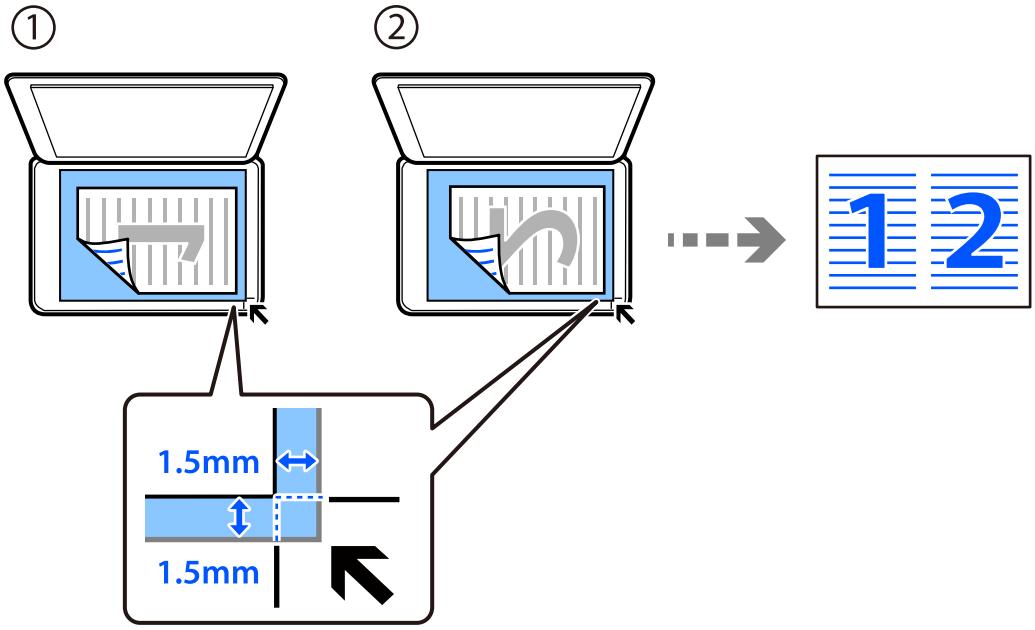

❏ Landscape originals

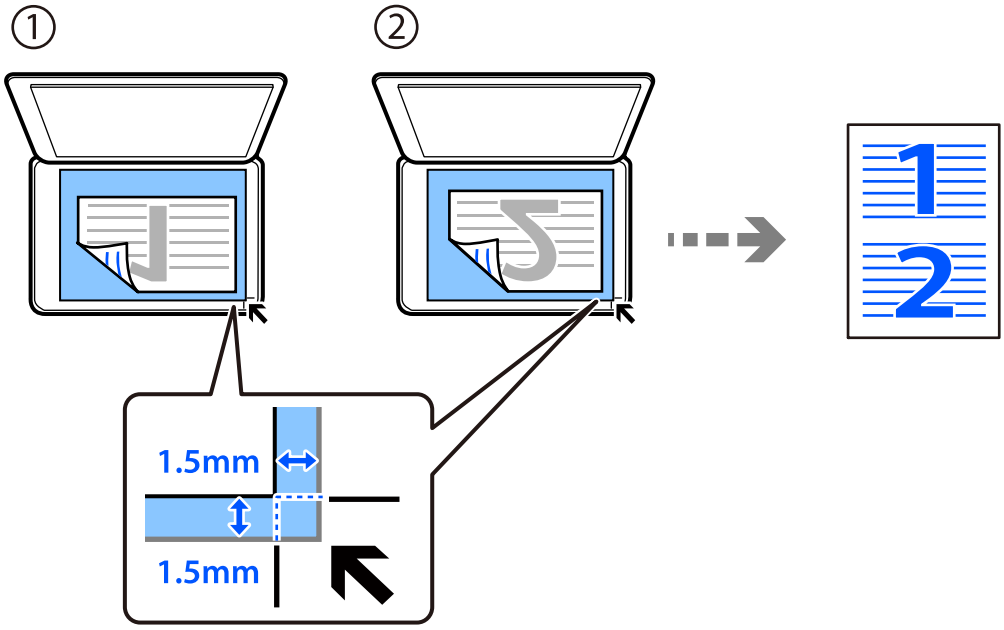

2. Select **Copy** on the home screen.

   To select an item, use the ▲▼◀▶ buttons, and then press the OK button.

3. Set the number of copies.

4. Select color copy or monochrome copy.

5. Press the OK button, and then press the ▼ button.

6. Select **Multi-Page** using the ▲ ▼ buttons, and then press the ▶ button.
7. Select **2-up**.
8. Specify the layout order and the orientation of the original, and then press the OK button.
9. Press the ⊡ button.

Copying ID card

Scans both sides of an ID card and copies onto one side of A4 size paper.

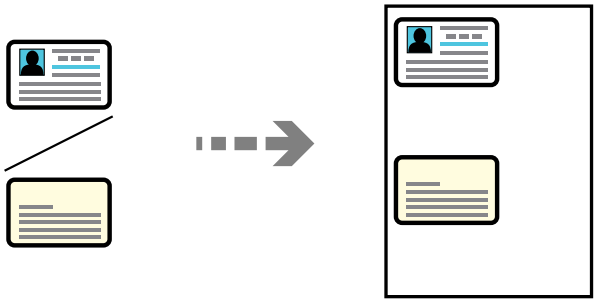

1. Select **Copy** on the home screen.

   To select an item, use the ▲ ▼ ◀ ▶ buttons, and then press the OK button.
2. Set the number of copies.
3. Select color copy or monochrome copy.
4. Press the OK button, and then press the ▼ button.
5. Select **ID Card Copy** using the ▲ ▼ buttons, and then select **On**.
6. Press the OK button, and then press the ⊡ button.

7. Place the original face-down and slide it to the corner mark.

   Place an ID card 5 mm away from the corner mark of the scanner glass.

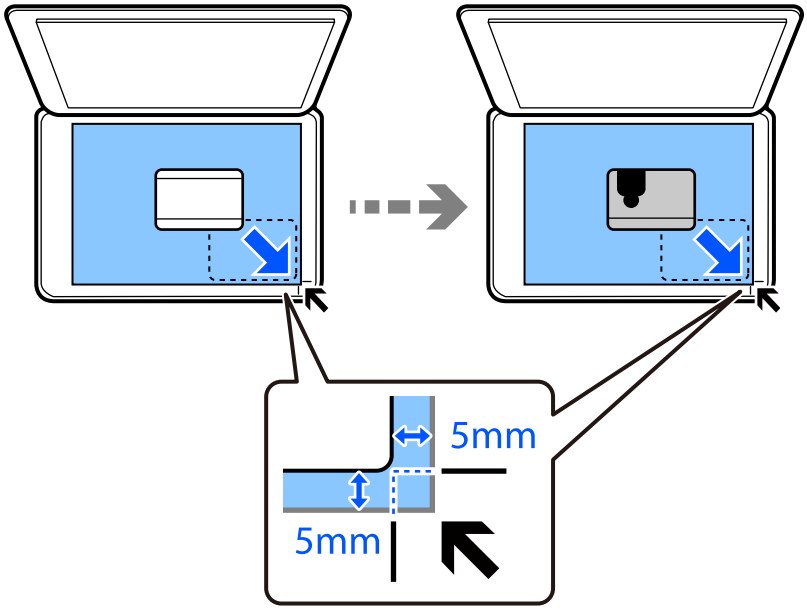

8. Place the back of the original face down, slide it to the corner mark, and then press the ⏻ button.

Copying Without Margins

Copies without margins around the edges. The image is enlarged a little to remove margins from the edges of the paper.

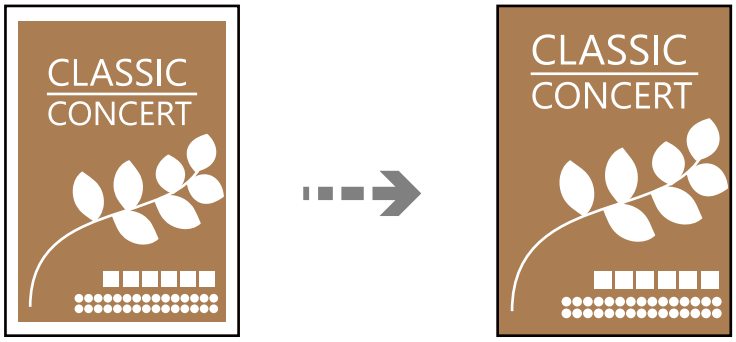

1. Place the original on the scanner glass.

   "Placing Originals on the Scanner Glass" on page 38

2. Select **Copy** on the home screen.

   To select an item, use the ▲ ▼ ◀ ▶ buttons, and then press the OK button.

3. Set the number of copies.

4. Select color copy or monochrome copy.

5. Press the OK button, and then press the ▼ button.
6. Select **Borderless Copy** using the ▲ ▼ buttons, and then press the ▶ button.
7. Select **On**.
8. Specify the **Expansion**.
9. Press the OK button, and then press the ⊡ button.

Menu Options for Copying

Available items vary depending on the menu you selected.

Number of Copies:

Set the number of copies.

B&W:

Copies the original in black and white (monochrome).

Color:

Copies the original in color.

Density:

Increase the level of density when the copying results are faint. Decrease the level of density when ink smears.

Paper Setting:

Select the paper size and the paper type you loaded.

Reduce/Enlarge:

Enlarges or reduces the originals.

❏ Actual Size

Copies at 100 % magnification.

❏ Auto Fit

Detects the scan area and automatically enlarges or reduces the original to fit to the paper size you selected. When there are white margins around the original, the white margins from the corner mark of the scanner glass are detected as the scan area, but the margins at the opposite side may be cropped.

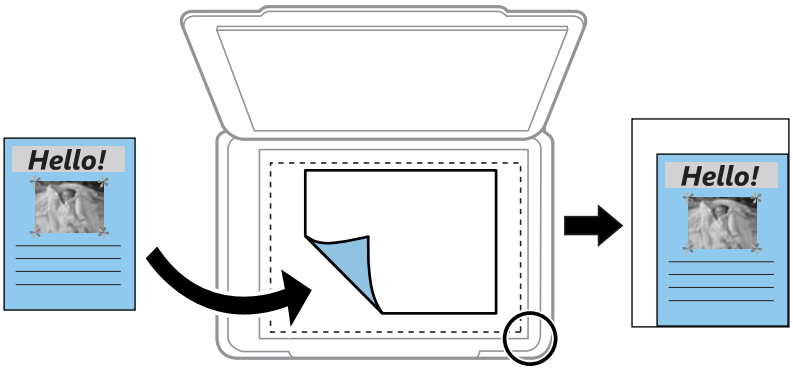

❏ Custom

Select to specify the magnification to enlarge or reduce the original.

Custom Size:

Specifies the magnification used to enlarge or reduce the original within a range of 25 to 400%.

Original Size:

Select the size of your original. When copying non-standard size originals, select the size closest to your original.

Multi-Page:

Select the copy layout.

❏ Single Page

Copies a single-sided original onto a single sheet.

❏ 2-up

Copies two single-sided originals onto a single sheet in 2-up layout. Select the layout order and the orientation of your original.

Quality:

Select the quality for copying. Selecting **High** provides higher quality printing, but the printing speed may be slower.

ID Card Copy:

Scans both sides of an ID card and copies onto one side of a paper.

Borderless Copy:

Copies without margins around the edges. The image is enlarged a little to remove margins from the edges of the paper. Select how much to enlarge in the **Expansion** setting.

Scanning

Basic Information on Scanning. 79

Scanning Originals to a Computer. 81

Scanning Originals Using WSD. 83

Scanning Originals to a Smart Device. 86

Advanced Scanning. 86

Basic Information on Scanning

What is a "Scan"?

A "scan" is the process of converting the optical information of paper data (such as documents, magazine clippings, photos, handwritten illustrations, and so on) into digital image data.

You can save scanned data as a digital image such as a JPEG or PDF.

You can then print the image, send it by email, and so on.

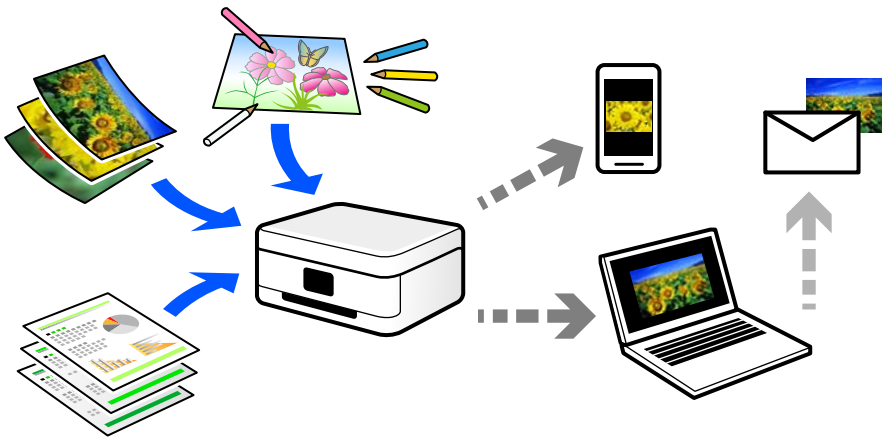

Scanning Uses

You can use scanning in a variety of ways to make your life more convenient.

- ❏ By scanning a paper document and turning it into digital data, you can read it on a computer or a smart device.
- ❏ By scanning tickets or flyers into digital data, you can dispose of the originals and reduce clutter.
- ❏ By scanning important documents, you can back them up to cloud services or another storage medium, just in case they get lost.
- ❏ You can send the scanned photos or documents to friends by email.
- ❏ By scanning hand-drawn illustrations and so on, you can share them on social media at a much higher quality than by just taking a photo on your smart device.
- ❏ By scanning your favorite pages from newspapers or magazines, you can save them and dispose of the originals.

Available Scanning Methods

You can use any of the following methods to scan using this printer.

Scanning to a Computer

There are two methods of scanning originals to a computer; scanning using the printer's control panel, and scanning from the computer.

You can scan easily from the control panel.

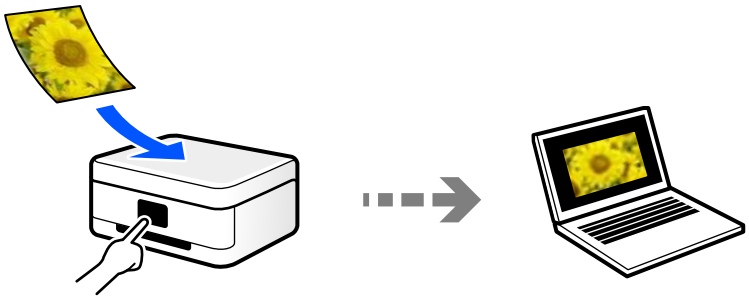

Use the scanning application Epson ScanSmart to scan from the computer. You can edit images after scanning.

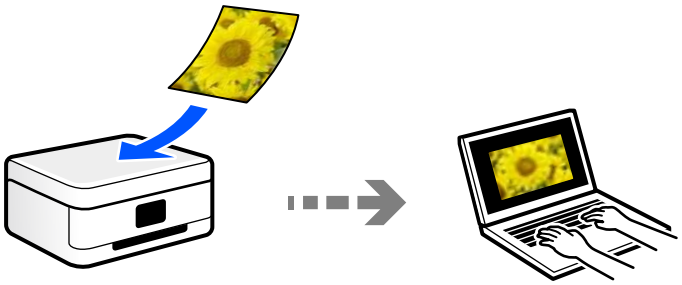

Scanning Using WSD

You can save the scanned image to a computer connected to the printer, using WSD feature.

If you are using the Windows 7/Windows Vista, you need to make WSD settings on your computer before scanning.

Scanning Directly from Smart Devices

You can save scanned images directly to a smart device such as a smart phone or tablet by using the Epson Smart Panel application on the smart device.

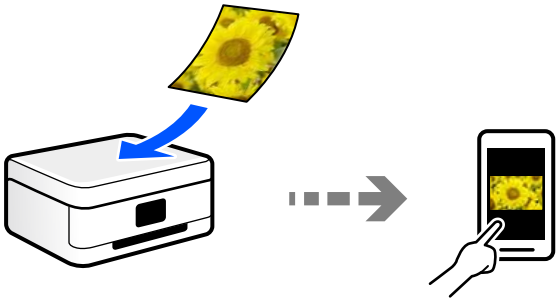

Recommended File Formats to Suit Your Purpose

Generally speaking, the JPEG format is suitable for photos while the PDF format is suitable for documents.

See the following descriptions to choose the best format for what you want to do.

File Format	Description
JPEG (.jpg)	A file format that allows you to compress the data to be saved. If the compression ratio is high, the image quality declines, and you cannot convert the image back to the original quality. This is the standard image format for digital cameras. This format is suitable for images that have many colors.
PDF (.pdf)	A general file format that can be used across different operating systems and provides the same level of screen display and print result. Also, you can save the multiple pages as a one file. You can view PDF files using dedicated PDF reading software or in Web browsers.

Recommended Resolutions to Suit Your Purpose

Resolution indicates the number of pixels (smallest area of an image) for each inch (25.4 mm), and is measured in dpi (dots per inch). The advantage of increasing the resolution is that the details in the image become fine. However, it can also have the following disadvantages.

- ❏ The file size becomes large
  (When you double the resolution, the file size becomes about four times larger.)
- ❏ Scanning, saving, and reading the image takes a long time
- ❏ Sending and receiving emails or faxes takes a long time
- ❏ The image becomes too large to fit the display or print on the paper

See the table and set the appropriate resolution for the purpose of your scanned image.

Purpose	Resolution (Reference)
Displaying on a computer Sending by email	Up to 200 dpi
Printing using a printer Sending by fax	200 to 300 dpi

Scanning Originals to a Computer

There are two methods of scanning originals to a computer; scanning using the printer's control panel, and scanning from the computer.

Scanning from the Control Panel

Note:
To use this feature, make sure the following applications are installed on your computer.

- ❏ *Epson ScanSmart (Windows 7 or later, or OS X El Capitan or later)*
- ❏ *Epson Event Manager (Windows Vista/Windows XP, or OS X Yosemite/OS X Mavericks/OS X Mountain Lion/Mac OS X v10.7.x/Mac OS X v10.6.8)*
- ❏ *Epson Scan 2 (application required to use the scanner feature)*

See the following to check for installed applications.

Windows 10: Click the start button, and then check the ***Epson Software*** *folder >* ***Epson ScanSmart****, and the* ***EPSON*** *folder >* ***Epson Scan 2****.*

Windows 8.1/Windows 8: Enter the application name in the search charm, and then check the displayed icon.

Windows 7: Click the start button, and then select ***All Programs****. Next, check the* ***Epson Software*** *folder >* ***Epson ScanSmart****, and the* ***EPSON*** *folder >* ***Epson Scan 2****.*

Windows Vista/Windows XP: Click the start button, and then select ***All Programs*** *or* ***Programs****. Next, check the* ***Epson Software*** *folder >* ***Epson Event Manager****, and the* ***EPSON*** *folder >* ***Epson Scan 2****.*

Mac OS: Select ***Go*** *>* ***Applications*** *>* ***Epson Software****.*

1. Place the originals.

   "Placing Originals on the Scanner Glass" on page 38

2. Select **Scan** on the control panel.

   To select an item, use the ▲▼◀▶ buttons, and then press the OK button.

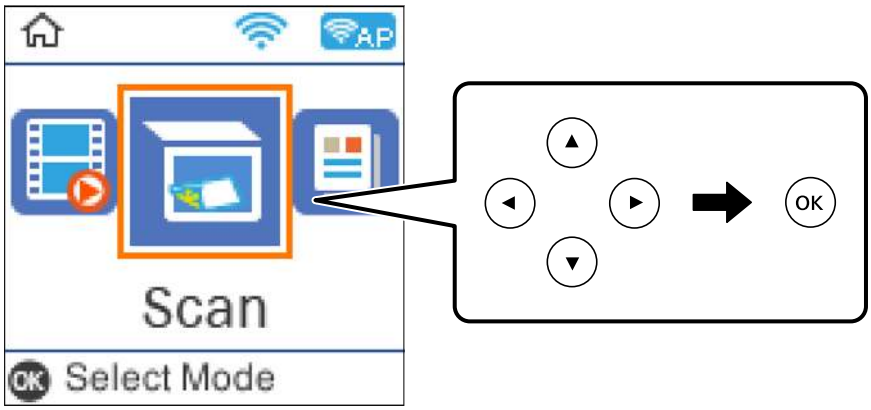

3. Select how to save the scanned image to a computer.
   - ❏ Preview on Computer (Windows 7 or later, or OS X El Capitan or later): Previews the scanned image on a computer before saving images.
   - ❏ To Computer (JPEG): Saves the scanned image in JPEG format.
   - ❏ To Computer (PDF): Saves the scanned image in PDF format.

4. Select a computer on which to save the scanned images.

5. Press the button.

   When using Windows 7 or later, or OS X El Capitan or later: Epson ScanSmart automatically starts on your computer, and scanning starts.

   Note:
   - *See the Epson ScanSmart help for detailed operation information for the software. Click **Help** on the Epson ScanSmart screen to open the help.*
   - *You can not only start scanning from the printer but also from your computer by using Epson ScanSmart.*

Scanning from a Computer

You can scan from a computer by using Epson ScanSmart.

This application allows you to scan documents and photos easily, and then save the scanned images in simple steps.

1. Place the originals.

   "Placing Originals on the Scanner Glass" on page 38

2. Start Epson ScanSmart.
   - Windows 10

     Click the start button, and then select **Epson Software** > **Epson ScanSmart**.
   - Windows 8.1/Windows 8

     Enter the application name in the search charm, and then select the displayed icon.
   - Windows 7

     Click the start button, and then select **All Programs** > **Epson Software** > **Epson ScanSmart**.
   - Mac OS

     Select **Go** > **Applications** > **Epson Software** > **Epson ScanSmart**.

3. When the Epson ScanSmart screen is displayed, follow the on-screen instructions to scan.

   Note:
   *Click **Help** to view detailed operation information.*

Scanning Originals Using WSD

You can save the scanned image to a computer connected to the printer, using WSD feature.

Note:
- *This feature is only available for computers running Windows 10/Windows 8.1/Windows 8/Windows 7/Windows Vista.*
- *If you are using Windows 7/Windows Vista, you need to setup your computer in advance using this feature.*

1. Place the originals.

   "Placing Originals on the Scanner Glass" on page 38

2. Select **Scan** on the control panel.

   To select an item, use the ▲▼◀▶ buttons, and then press the OK button.

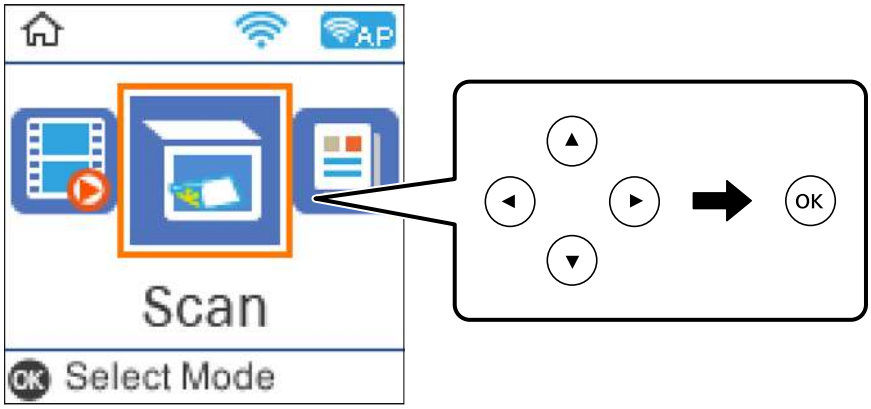

3. Select **To WSD**.

4. Select a computer.

5. Press the ⊡ button.

Setting Up a WSD Port

This section explains how to set up a WSD port for Windows 7/Windows Vista.

Note:
For Windows 10/Windows 8.1/Windows 8, the WSD port is set up automatically.

The following is necessary to set up a WSD port.

❏ The printer and the computer are connected to the network.

❏ The printer driver is installed on the computer.

1. Turn the printer on.

2. Click start, and then click **Network** on the computer.

3. Right-click the printer, and then click **Install**.

   Click **Continue** when the **User Account Control** screen is displayed.

Click **Uninstall** and start again if the **Uninstall** screen is displayed.

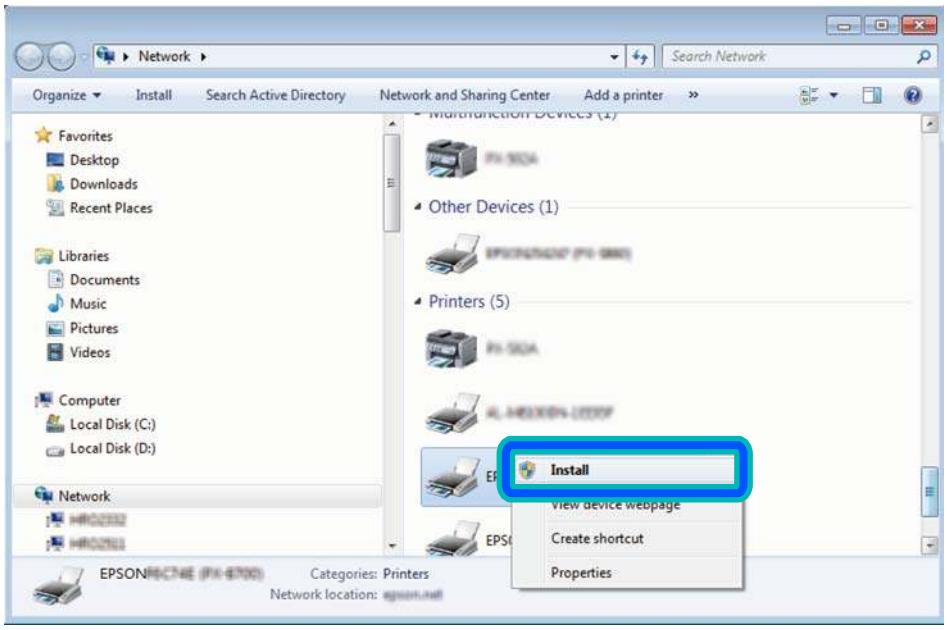

Note:
The printer name you set on the network and model name (EPSON XXXXXX (XX-XXXX)) are displayed on the network screen. You can check the printer's name set on the network from the printer's control panel or by printing a network status sheet.

4. Click **Your device is ready to use**.

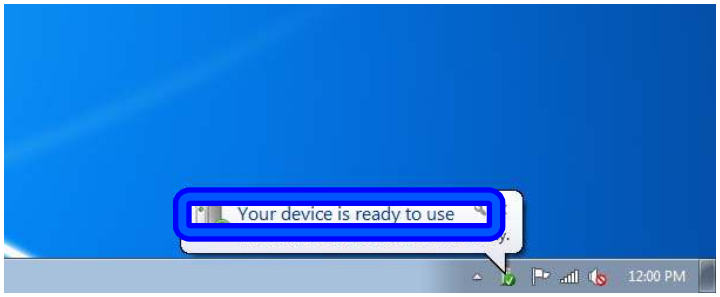

5. Check the message, and then click **Close**.

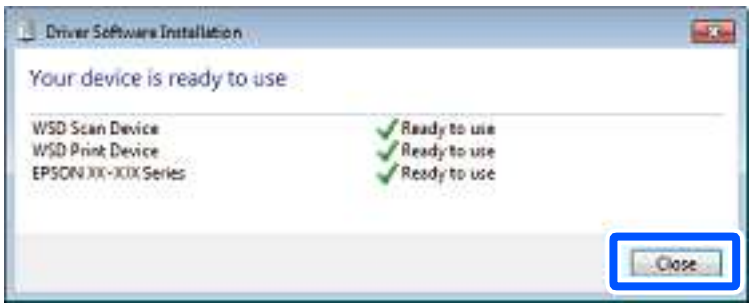

6. Open the **Devices and Printers** screen.

❏ Windows 7

Click start > **Control Panel** > **Hardware and Sound** (or **Hardware**) > **Devices and Printers**.

❏ Windows Vista

Click start > **Control Panel** > **Hardware and Sound** > **Printers**.

7. Check that an icon with the printer's name on the network is displayed.

   Select the printer name when using with WSD.

Scanning Originals to a Smart Device

Note:

❏ *Before scanning, install Epson Smart Panel on your smart device.*

❏ *Epson Smart Panel screens are subject to change without notice.*

❏ *Epson Smart Panel contents may vary depending on the product.*

1. Place the originals.

   "Placing Originals" on page 36

2. Start Epson Smart Panel on your smart device.

3. Select scan menu on the home screen.

4. Follow the on-screen instructions to scan and save the images.

Advanced Scanning

Scanning Multiple Photos at the Same Time

Using Epson ScanSmart, you can scan multiple photos at the same time and save each image individually.

1. Place the photos on the scanner glass. Place them 4.5 mm (0.2 in.) away from the horizontal and vertical edges of the scanner glass, and place them at least 20 mm (0.8 in.) away from each other.

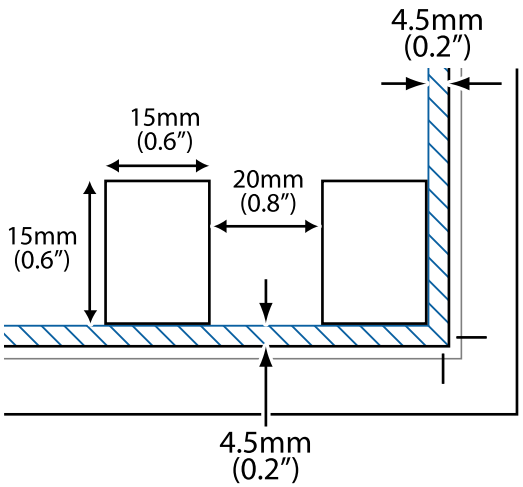

Note:
The photos should be larger than 15×15 mm (0.6×0.6 in.).

2. Start Epson ScanSmart.
   - ❏ Windows 10
     Click the start button, and then select **Epson Software** > **Epson ScanSmart**.
   - ❏ Windows 8.1/Windows 8
     Enter the application name in the search charm, and then select the displayed icon.
   - ❏ Windows 7
     Click the start button, and then select **All Programs** > **Epson Software** > **Epson ScanSmart**.
   - ❏ Mac OS
     Select **Go** > **Applications** > **Epson Software** > **Epson ScanSmart**.
3. When the Epson ScanSmart screen is displayed, follow the on-screen instructions to scan.

Scanned photos are saved as individual images.

Faxing

Before Using Fax Features. 89

Overview of this Printer's Fax Features. 99

Sending Faxes Using the Printer. 101

Receiving Faxes on the Printer. 105

Menu Options for Faxing. 107

Using Other Faxing Features. 111

Sending a Fax from a Computer. 111

Receiving Faxes on a Computer. 115

Before Using Fax Features

Faxing feature is available only for ET-4800 Series/L5290 Series.

Check the following before you start using the fax features.

❏ The printer and the phone line, and (if it is being used) the phone machine are connected correctly

❏ Fax basic settings (Fax Setting Wizard) is complete

❏ Other necessary Fax Settings are complete

See "Related Information" below to make settings.

Related Information

➡ "Connecting the Printer to a Phone Line" on page 89
➡ "Making the Printer Ready to Send and Receive Faxes" on page 92
➡ "Basic Settings Menu" on page 263
➡ "Making Settings for the Printer's Fax Features According to Use" on page 94
➡ "Fax Settings" on page 262
➡ "Making Contacts Available" on page 97
➡ "User Default Settings Menu" on page 267
➡ "Report Settings Menu" on page 266

Connecting the Printer to a Phone Line

Compatible Telephone Lines

You can use the printer over standard analogue telephone lines (PSTN = Public Switched Telephone Network) and PBX (Private Branch Exchange) telephone systems.

You may not be able to use the printer with the following phone lines or systems.

❏ VoIP phone line such as DSL or fiber-optic digital service

❏ Digital phone line (ISDN)

❏ Some PBX telephone systems

❏ When adapters such as terminal adapters, VoIP adapters, splitters, or DSL router are connected between the telephone wall jack and the printer

Related Information

➡ "Connecting the Printer to a Phone Line" on page 89

Connecting the Printer to a Phone Line

Connect the printer to a telephone wall jack using an RJ-11 (6P2C) phone cable. When connecting a telephone to the printer, use a second RJ-11 (6P2C) phone cable.

Depending on the area, a phone cable may be included with the printer. If it is included, use that cable.

You may need to connect the phone cable to an adapter provided for your country or region.

Note:
Remove the cap from the EXT. port of the printer only when connecting your telephone to the printer. Do not remove the cap if you are not connecting your telephone.

In areas where lightning strikes occur frequently, we recommend that you use a surge protector.

Connecting to a Standard Phone Line (PSTN) or PBX

Connect a phone cable from the telephone wall jack or PBX port to the LINE port on the back of the printer.

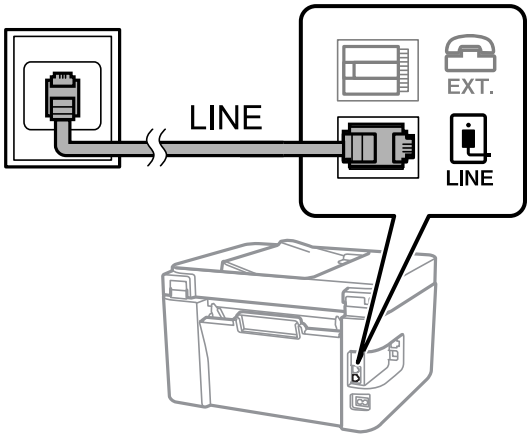

Related Information

➡ "Connecting Your Phone Device to the Printer" on page 91

Connecting to DSL or ISDN

Connect a phone cable from the DSL modem or the ISDN terminal adapter to the LINE port on the back of the printer. See the documentation provided with the modem or the adapter for more details.

Note:
If your DSL modem is not equipped with a built-in DSL filter, connect a separate DSL filter.

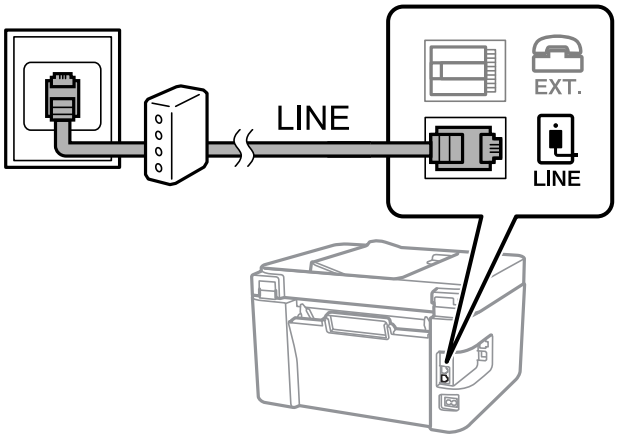

Related Information

➡ "Connecting Your Phone Device to the Printer" on page 91

Connecting Your Phone Device to the Printer

When using the printer and your telephone on a single phone line, connect the telephone to the printer.

Note:

- ❏ *If your phone device has a fax function, disable the fax function before connecting. See the manuals that came with the phone device for details. Depending on the model of the phone device, the fax function cannot be completely disabled, so you may not be able to use it as an external phone.*
- ❏ *If you connect an answering machine, make sure the printer's* ***Rings to Answer*** *setting is set higher than the number of rings your answering machine is set to answer a call.*

1. Remove the cap from the EXT. port on the back of the printer.

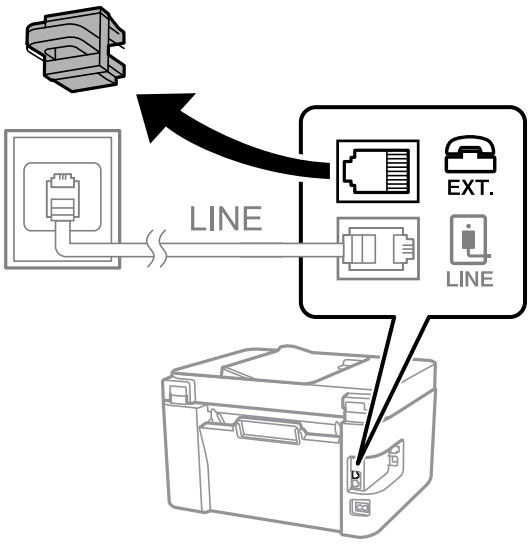

2. Connect the phone device and the EXT. port with a phone cable.

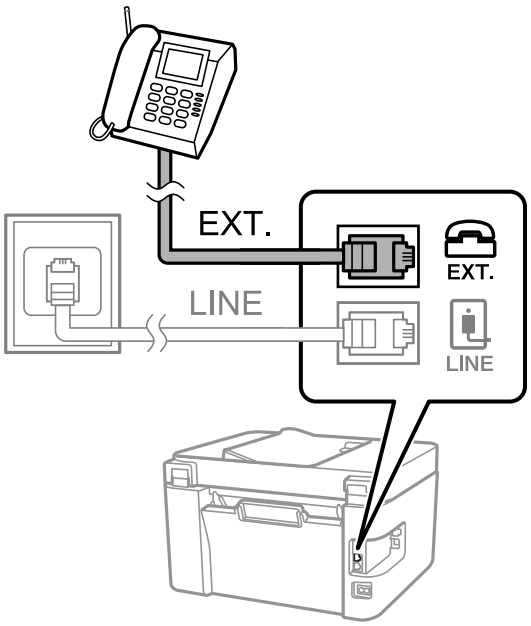

Note:
When sharing a single phone line, make sure you connect the phone device to the EXT. port of the printer. If you split the line to connect the phone device and the printer separately, the phone and the printer do not work correctly.

3. Select **Fax** on the printer's control panel.

   To select an item, use the ▲ ▼ ◀ ▶ buttons, and then press the OK button.

4. Pick up the handset.

   If a message to start sending or receiving faxes is displayed as shown on the following screen, the connection has been established.

Related Information

➡ "Making the Printer Ready to Send and Receive Faxes" on page 92
➡ "Making Settings to Use an Answering Machine" on page 95
➡ "Making Settings to Receive Faxes Operating Only a Connected Phone (Remote Receive)" on page 95
➡ "Receive Mode:" on page 264

Making the Printer Ready to Send and Receive Faxes

Fax Setting Wizard configures the basic fax features to make the printer ready to send and receive faxes.

The Wizard is displayed automatically when the printer is turned on for the first time. You can also display the wizard manually from the printer's control panel. You need to run the wizard again in case the wizard is skipped when the printer is first turned on or when the connection environment has changed.

❏ The items below are what you can set through the wizard.

- ❏ **Header** (**Your Phone Number** and **Fax Header**)
- ❏ **Receive Mode** (**Auto** or **Manual**)
- ❏ **DRD Setting**

❏ The items below are set automatically according to the connection environment.

- ❏ **Dial Mode** (such as **Tone** or **Pulse**)

❏ Other items in **Basic Settings** remain as they are.

Related Information

➡ "Basic Settings Menu" on page 263

Making the Printer Ready to Send and Receive Faxes Using Fax Setting Wizard

1. Select **Settings** on the home screen on the printer's control panel.

   To select an item, use the ▲▼◀▶ buttons, and then press the OK button.

2. Select **Fax Settings** > **Fax Setting Wizard**.

3. Following the on-screen instructions, enter the sender name such as your company name, your fax number.

   Note:
   Your sender name and your fax number appear as the header for outgoing faxes.

4. Make the distinctive ring detection (DRD) setting.

   ❏ If you have subscribed to a distinctive ring service from your telephone company:

   Go to the next screen and select the ring pattern to be used for incoming faxes.

   When you select any item except **All**, **Receive Mode** is set to **Auto** and you continue to the next screen where you can check the settings you made.

   ❏ If you have not subscribed to a distinctive ring service from your telephone company, or you do not need to set this option:

   Skip this setting and go to the screen where you can check the settings you made.

   Note:
   ❏ *Distinctive ring services, offered by many telephone companies (the service name differs by company), allows you to have several phone numbers on one phone line. Each number is assigned a different ring pattern. You can use one number for voice calls and another for fax calls. Select the ring pattern assigned to fax calls in **DRD**.*

   ❏ *Depending on the region, **On** and **Off** are displayed as the **DRD** options. Select **On** to use the distinctive ring feature.*

5. Make the Receive Mode setting.

   ❏ If you do not need to connect a phone device to the printer:

   Select **No**.

   Receive Mode is set to **Auto**.

   ❏ If you need to connect a phone device to the printer:

   Select **Yes**, and then select whether or not to receive faxes automatically.

6. Check the settings you made on the screen displayed, and then proceed to the next screen.

   To correct or change settings, press the ⮌ button.

7. Check the fax connection by selecting **Start Checking**, and then select **Print** to print a report that shows the connection status.

   Note:
   ❏ *If there are any errors reported, follow the instructions on the report to solve them.*

   ❏ *If the **Select Line Type** screen is displayed, select the line type.*

   *- When you are connecting the printer to a PBX phone system or terminal adapter, select **PBX**.*

   *- When you are connecting the printer to a standard phone line, select **PSTN**. When the message to disable dial tone detection is shown on the screen, press the OK button. However, disabling dial tone detection may cause the printer to skip the first digit of a fax number when dialing and send the fax to the wrong number.*

Related Information

➡ "Connecting the Printer to a Phone Line" on page 89
➡ "Making Settings to Use an Answering Machine" on page 95
➡ "Receive Mode:" on page 264
➡ "Making Settings to Receive Faxes Operating Only a Connected Phone (Remote Receive)" on page 95
➡ "Basic Settings Menu" on page 263

Making Settings for the Printer's Fax Features According to Use

You can configure the printer's fax features individually using the printer's control panel according to use. The settings made using **Fax Setting Wizard** can also be changed. For more details, see the descriptions of the **Fax Settings** menu.

Related Information

➡ "Fax Settings" on page 262
➡ "Receiving Incoming Faxes" on page 105
➡ "Making Settings for a PBX Phone System" on page 94
➡ "Making Settings When You Connect a Phone Device" on page 95
➡ "Making Settings for Blocking Junk Faxes" on page 95
➡ "Making Settings to Send and Receive Faxes on a Computer" on page 96

Making Settings for a PBX Phone System

Make the following settings when using the printer in offices that use extensions and require external access codes, such as 0 and 9, to get an outside line.

1. Select **Settings** on the printer's control panel.

   To select an item, use the ▲▼◀▶ buttons, and then press the OK button.

2. Select **Fax Settings** > **Basic Settings**.

3. Select **Line Type**, and then select **PBX**.

4. When sending a fax to an outside fax number using # (hash) instead of the actual external access code, select **Use** as the **Access Code**.

   The # entered instead of the actual access code, is replaced with the stored access code when dialing. Using # helps avoid connection problems when connecting to an outside line.

   Note:
   *You cannot send faxes to recipients in **Contacts** in which an external access code such as 0 or 9 is set.*

   *If you have registered recipients in **Contacts** using an external access code such as 0 or 9, set the **Access Code** to **Do Not Use**. Otherwise, you must change the code to # in **Contacts**.*

5. Enter the external access code used for your phone system, and then press the OK button.

6. Press the OK button to apply the settings.

   The access code is stored in the printer.

Making Settings When You Connect a Phone Device

Making Settings to Use an Answering Machine

You need settings to use an answering machine.

1. Select **Settings** on the home screen on the printer's control panel.

   To select an item, use the ▲ ▼ ◀ ▶ buttons, and then press the OK button.

2. Select **Fax Settings** > **Basic Settings**.

3. Set **Receive Mode** to **Auto**.

4. Set the **Rings to Answer** setting of the printer to a higher number than the number of rings for the answering machine.

   If **Rings to Answer** is set lower than the number of rings for the answering machine, the answering machine cannot receive voice calls to record voice messages. See the manuals that came with the answering machine for its settings.

The printer's **Rings to Answer** setting may not be displayed, depending on the region.

Related Information

➡ "Basic Settings Menu" on page 263

Making Settings to Receive Faxes Operating Only a Connected Phone (Remote Receive)

You can start receiving incoming faxes by only picking up the handset and operating the phone, without operating the printer at all.

The **Remote Receive** feature is available for telephones that support tone dialing.

1. Select **Settings** on the home screen on the printer's control panel.

   To select an item, use the ▲ ▼ ◀ ▶ buttons, and then press the OK button.

2. Select **Fax Settings** > **Basic Settings** > **Remote Receive**.

3. Select **On**.

4. Enter a two digit code (you can enter 0 to 9, *, and #) as the start code, and then press the OK button to apply the settings.

Related Information

➡ "Basic Settings Menu" on page 263

Making Settings for Blocking Junk Faxes

You can block junk faxes.

1. Select **Settings** on the home screen on the printer's control panel.

   To select an item, use the ▲ ▼ ◀ ▶ buttons, and then press the OK button.

2. Select **Fax Settings** > **Basic Settings** > **Rejection Fax**.

3. Set the condition to block junk faxes.

   Select **Rejection Fax**, and then enable the following options.

   ❏ Rejection Number List: Rejects faxes that are in the Rejection Number List.

   ❏ Fax Header Blank: Rejects faxes that have blank header information.

   ❏ Caller not in Contacts: Rejects faxes that have not been added to the contact list.

4. Press ⮌ to return to the **Rejection Fax** screen.

5. If you are using the **Rejection Number List**, select **Edit Blocked Number list**, and then edit the list.

Making Settings to Send and Receive Faxes on a Computer

To send and receive faxes on a computer, FAX Utility must be installed on the computer connected by network or USB cable .

Making Save to Computer Setting to Receive Faxes

You can receive faxes on a computer by using the FAX Utility. Install FAX Utility on the client computer and make the setting. For details, see Basic Operations in the FAX Utility help (displayed on the main window).

The setting item below on the printer's control panel is set to **Yes**, and the faxes received can be saved on the computer.

Settings > **Fax Settings** > **Receive Settings** > **Save to Computer**

Making Save to Computer Setting to Also Print on the Printer to Receive Faxes

You can make the setting to print received faxes on the printer as well as save them on a computer.

1. Select **Settings** on the home screen on the printer's control panel.

   To select an item, use the ▲ ▼ ◀ ▶ buttons, and then press the OK button.

2. Select **Fax Settings** > **Receive Settings**.

3. Select **Save to Computer** > **Yes and Print**.

Making Save to Computer Setting not to Receive Faxes

To set the printer not to save received faxes on the computer, change the settings on the printer.

Note:
You can also change the settings using the FAX Utility. However, if there are any faxes that have been unsaved to the computer, the feature does not work.

1. Select **Settings** on the home screen on the printer's control panel.

   To select an item, use the ▲ ▼ ◀ ▶ buttons, and then press the OK button.

2. Select **Fax Settings** > **Receive Settings**.

3. Select**Save to Computer** > **No**.

Making Contacts Available

Registering a contacts list allows you to easily enter destinations. You can register up to 100 entries, and you can use the contacts list when you enter a fax number.

Registering or Editing Contacts

1. Select **Settings** on the home screen.

   To select an item, use the ▲ ▼ ◀ ▶ buttons, and then press the OK button.

2. Select **Contacts Manager**.

3. Do one of the following.

   ❏ To register a new contact, select **Add Entry**, and then select the registry number.

   ❏ To edit a contact, select **Edit**, and then select the target contact .

   ❏ To delete a contact, select **Delete**, select the target contact, and then select **Yes**. No further steps are necessary.

4. Make the necessary settings.

   Note:
   *When entering a fax number, enter an external access code at the beginning of the fax number if your phone system is PBX and you need the access code to get an outside line. If the access code has been set in the **Line Type** setting, enter a hash (#) instead of the actual access code. To add a pause (pause for three seconds) during dialing, enter a hyphen (-).*

5. Press the OK button to proceed, and then select **Add Entry** to complete registering or editing.

Registering or Editing Grouped Contacts

Adding contacts to a group allows you to send a fax to multiple destinations at the same time.

1. Select **Settings** on the home screen.

   To select an item, use the ▲ ▼ ◀ ▶ buttons, and then press the OK button.

2. Select **Contacts Manager**.

3. Do one of the following.

   ❏ To register a new group of contacts, select **Add Group**, and then select the registry number.

   ❏ To edit a group of contacts, select **Edit**, and then select the target group.

   ❏ To delete a group ofcontacts, select **Delete**, select the target group, and then select **Yes**. No further steps are necessary.

4. Enter or edit the **Group Name**, and then press the OK.

5. Enter or edit the **Index Word**, and then press the OK.

6. Select the contacts that you want to register in the group.

   Each time you press the ▶ button, the contact is selected and deselected alternatively.

   Note:
   You can register up to 99 contacts.

7. Press the OK button to proceed, and then select **Add Entry** to complete registering or editing.

Register Contacts on a Computer

Using Web Config, you can create a contact list on your computer and import it to the printer.

1. Access Web Config.

2. Select **Advanced Settings** from the list at the top right of the window.

3. Select **Contacts**.

4. Select the number that you want to register, and then click **Edit**.

5. Enter **Name**, **Index Word**, **Fax Number**, and **Fax Speed**.

6. Click **Apply**.

Related Information

➡ "Running Web Config on a Web Browser" on page 255

Destination Setting Items

Items	Settings and Explanation
Name	Enter a name displayed in the contacts in 30 characters or less in Unicode (UTF-8). If you do not specify this, leave it blank.
Index Word	Enter words to search in 30 characters or less in Unicode (UTF-8). If you do not specify this, leave it blank.
Type	This item is fixed as **Fax**. You cannot change this setting.
Fax Number	Enter between 1 and 64 characters using 0-9 - * # and space.
Fax Speed	Select a communication speed for a destination.

Registering Destinations as a Group

1. Access Web Config.

2. Select **Advanced Settings** from the list at the top right of the window.

3. Select **Contacts**.

4. Select the number that you want to register, and then click **Edit**.
5. Enter a **Name** and **Index Word**.
6. Select a group from **Type**.
7. Click **Select** for **Contact(s) for Group**.

   The available destinations are displayed.
8. Select the destination that you want to register to the group, and then click **Select**.

   Note:
   Destinations can be registered to multiple groups.
9. Click **Apply**.

Related Information

➡ "Running Web Config on a Web Browser" on page 255

Overview of this Printer's Fax Features

Feature: Sending Faxes

Sending Methods

❏ Sending automatically

When you scan an original by pressing the button to select **Send Fax**, the printer dials the recipients and sends the fax.

"Sending Faxes Using the Printer" on page 101

❏ Sending manually

When you perform a manual check on the line connection by dialing the recipient, press the button to select **Send Fax** to start sending a fax directly.

"Sending Faxes Dialing from the External Phone Device" on page 103

Recipient Designation when Sending a Fax

You can enter recipients using keypad buttons, **Contacts**, and **Recent**.

"Selecting Recipients" on page 102

"Making Contacts Available" on page 97

Scan Settings when Sending a Fax

You can select items such as **Resolution** or **Original Size (Glass)** when sending faxes.

"Scan Settings" on page 108

Using Fax Send Settings when Sending a Fax

You can use **Fax Send Settings** such as **Direct Send** (to send a large document stably) or **Send Fax Later** (to send a fax at a time you specified).

"Fax Send Settings" on page 109

Feature: Receiving Faxes

Receive Mode

There are two options in **Receive Mode** for receiving incoming faxes.

❏ Manual

Mainly for phoning, but also for faxing

"Usage of Manual Mode" on page 106

❏ Auto

- Only for faxing (external phone device is not required)
- Mainly for faxing, and sometimes phoning

"Usage of Auto Mode" on page 106

Receiving Faxes by Operating a Connected Phone

You can receive faxes by only operating an external phone device.

"Basic Settings Menu" on page 263

"Making Settings When You Connect a Phone Device" on page 95

Feature: PC-FAX Send/Receive (Windows/Mac OS)

PC-FAX Send

You can send faxes from a computer.

"Software for Faxing" on page 253

"Sending a Fax from a Computer" on page 111

PC-FAX Receive

You can receive faxes on a computer.

"Making Settings to Send and Receive Faxes on a Computer" on page 96

"Software for Faxing" on page 253

"Receiving Faxes on a Computer" on page 115

Features: Various Fax Reports

You can check the status of sent and received faxes in a report.

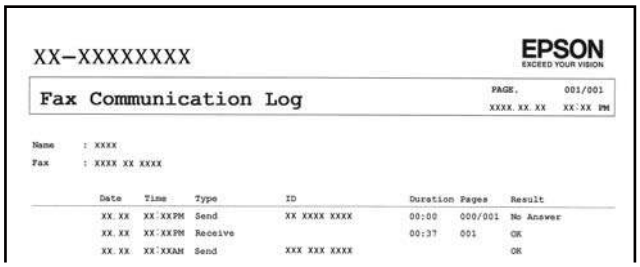
XX-XXXXXXXX

EPSON
EXCEED YOUR VISION

Fax Communication Log

PAGE. 001/001
XXXX.XX.XX XX:XX PM

Name : XXXX
Fax : XXXX XX XXXX

Date	Time	Type	ID	Duration	Pages	Result
XX.XX	XX:XXPM	Send	XX XXXX XXXX	00:00	000/001	No Answer
XX.XX	XX:XXPM	Receive		00:37	001	OK
XX.XX	XX:XXAM	Send	XXX XXX XXXX			OK

"Report Settings Menu" on page 266

"Fax Send Settings" on page 109

"Transmission Log:" on page 110

"Fax Report:" on page 110

Feature: Security when Sending and Receiving Faxes

You can use many security features such as **Direct Dialing Restrictions** to prevent sending to the wrong destination, or **Backup Data Auto Clear** to prevent information leakage.

"Security Settings Menu" on page 266

Features: Other Useful Features

Blocking Junk Faxes

You can reject junk faxes.

"Rejection Fax:" on page 264

Receiving Faxes After Dialing

After dialing to another fax machine, you can receive documents from that fax machine.

"Receiving Faxes by Making a Phone Call" on page 107

"Polling Receive:" on page 110

Sending Faxes Using the Printer

You can send faxes by entering fax numbers for recipients on the printer's control panel.

Note:
When sending a fax in monochrome, you can preview the scanned image on the LCD screen before sending.

1. Place the originals.

   You can send up to 100 pages in one transmission; however depending on the remaining amount of memory, you may not be able to send faxes even with less than 100 pages.

"Placing Originals on the Scanner Glass" on page 38

"Placing Originals on the ADF" on page 37

2. Select **Fax** on the printer's control panel.

   To select an item, use the ▲▼◀▶ buttons, and then press the OK button.

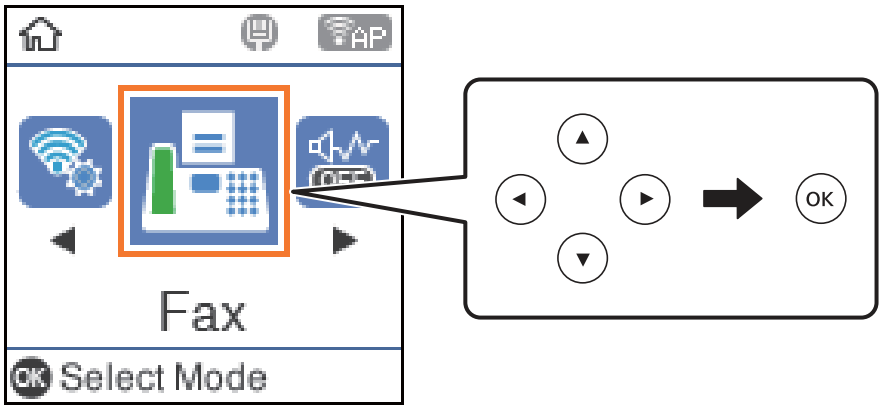

3. Specify the recipient.

   "Selecting Recipients" on page 102

4. Select **Menu** by pressing the OK button, and then select **Scan Settings** or **Fax Send Settings** to make settings as necessary such as the resolution and the sending method.

   "Scan Settings" on page 108

   "Fax Send Settings" on page 109

5. Press the button to send the fax .

   Note:
   - *If the fax number is busy or there are some problems, the printer automatically redials after one minute.*
   - *To cancel sending, press the button.*
   - *It takes longer to send a fax in color because the printer performs scanning and sending simultaneously. While the printer is sending a fax in color, you cannot use the other features.*

Selecting Recipients

You can specify recipients to send the fax using the following methods.

Entering Fax Number Manually

Press the fax number with the number buttons, and then press the OK button.

- To add a pause (pause for three seconds during dialing), press the ▼ button.

- If you have set an external access code in **Line Type**, enter "#" (hash) instead of the actual external access code at the beginning of the fax number.

Note:
*If you cannot manually enter a fax number, **Direct Dialing Restrictions** in **Security Settings** is set to **On**. Select fax recipients from the contacts list or the sent fax history.*

Selecting the recipients from the contacts list

Press the ▲ button and select the recipients you want to send to. If the recipient you want to send to has not been registered in **Contacts**, register it from **Contacts Manager**.

Fax > **Menu** > **Contacts Manager**

Selecting the recipients from the sent fax history

Press the ▼ button, and then select a recipient.

Note:

*To delete recipients you have entered, press the ▶ button, move the cursor to the recipient you want to delete by press the ▲ ▼ button, and then deselect the recipient by pressing the OK button. Press the ⮌ button to finish and return to the **Fax** screen.*

Related Information

➡ "Making Contacts Available" on page 97

Various Ways of Sending Faxes

Sending Faxes Dialing from the External Phone Device

You can send a fax by dialing using the connected telephone when you want to talk over the phone before sending a fax, or when the recipient's fax machine does not switch to the fax automatically.

1. Place the originals.

   You can send up to 100 pages in one transmission.

2. Pick up the handset of the connected telephone, and then dial the recipient's fax number using the phone.

   Note:
   When the recipient answers the phone, you can talk with the recipient.

3. Select **Fax** on the home screen.

   To select an item, use the ▲ ▼ ◀ ▶ buttons, and then press the OK button.

4. Press the OK button, and then select **Scan Settings** or **Fax Send Settings** to make settings such as the resolution and the sending method if necessary.

5. When you hear a fax tone, press the ⟐ button, and then hang up the handset.

   Note:
   When a number is dialed using the connected telephone, it takes longer to send a fax because the printer performs scanning and sending simultaneously. While sending the fax, you cannot use the other features.

6. When sending is complete, remove the originals.

Related Information

➡ "Scan Settings" on page 108

➡ "Fax Send Settings" on page 109

Sending Many Pages of a Monochrome Document (Direct Send)

When sending a fax in monochrome, the scanned document is temporarily stored in the printer's memory. Therefore, sending a lot of pages may cause the printer to run out of memory and stop sending the fax. You can avoid this by enabling the **Direct Send** feature, however, it takes longer to send the fax because the printer performs scanning and sending simultaneously. You can use this feature when there is only one recipient.

Accessing the Menu

You can find the menu on the printer's control panel below.

Fax > **Fax Settings** > **Direct Send**.

Sending Faxes in Monochrome at a Specified Time of the Day (Send Fax Later)

You can set to send a fax at a specified time. Only monochrome faxes can be sent when the time to send is specified.

1. Place the originals.
2. Select **Fax** on the home screen.

   To select an item, use the ▲ ▼ ◀ ▶ buttons, and then press the OK button.
3. Specify the recipient.
4. Make settings to send faxes at a specified time.

   ❶ Press the OK button, and then select **Fax Send Settings**.

   ❷ Select **Send Fax Later**, and then select **On**.

   ❸ Enter the time you want to send the fax, and then press the OK button.

   You can also make settings such as the resolution and the sending method in **Scan Settings** or **Fax Send Settings** if necessary.
5. Press the ⮌ button until return to **Fax** screen, and then press the ⟐ button.
6. When sending is complete, remove the originals.

Note:
*You can cancel faxing from the **Fax** screen.*

Sending Different Size Documents Using ADF (ADF Continuous Scan)

Sending faxes by placing originals one by one, or by placing originals by size, you can send them as one document at their original sizes.

If you place different sized originals in the ADF, all of the originals are sent at the largest size among them. To send originals at their original sizes, do not place originals with mixed sizes.

1. Place the first batch of originals at the same size.

2. Select **Fax** on the home screen.

   To select an item, use the ▲ ▼ ◀ ▶ buttons, and then press the OK button.

3. Specify the recipient.

4. Press the OK button, and then select **Scan Settings**.

5. Select **ADF Continuous Scan**, and then select **On**.

   You can also make settings such as the resolution and the sending method in **Scan Settings** or **Fax Send Settings** if necessary.

6. Press the ⮌ button until you are returned to the **Fax** screen, and then press the ⊡ button.

7. When scanning the first originals is complete and the message **Send another page?** is displayed on the control panel, select **Yes**, load the next originals, and then press the ⊡ button.

   Note:
   If you leave the printer untouched for 20 seconds after prompted to set the next originals, the printer stops storing and starts sending the document.

8. When sending is complete, remove the originals.

Receiving Faxes on the Printer

If the printer is connected to the phone line and basic settings have been completed using the Fax Setting Wizard, you can receive faxes.

Received faxes are printed.

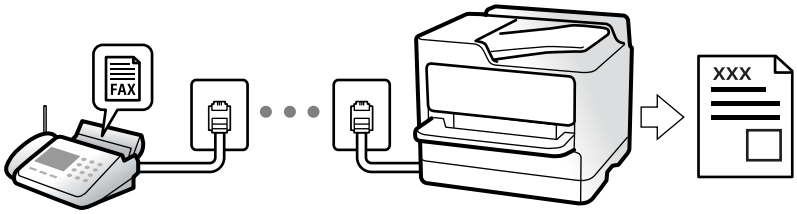

When you want to check the status of the fax settings, print a **Fax Settings List** by selecting **Fax** > **Menu** > **More** > **Fax Report** > **Fax Settings List**.

Receiving Incoming Faxes

There are two options in **Receive Mode**.

Related Information

➡ "Usage of Manual Mode" on page 106
➡ "Usage of Auto Mode" on page 106
➡ "Receive Mode:" on page 264

Usage of Manual Mode

This mode is mainly for making phone calls, but is also for faxing.

Receiving Faxes

When the telephone rings, you can answer the ringing manually by picking up the handset.

❏ When you hear a fax signal (baud):

Select **Fax** on the printer's home screen, press the # button to select receiving a fax, and then press the ◇. Next, hang up the handset.

❏ If the ringing is for a voice call:

You can answer the phone as normal.

Receiving Faxes Using only the Connected Telephone

When **Remote Receive** is set, you can receive faxes by simply entering the start code.

When the telephone rings, pick up the handset. When you hear a fax tone (baud), dial the two digit start code, and then hang up the handset.

Related Information

➡ "Remote Receive:" on page 264

Usage of Auto Mode

This mode allows you to use the line for the following uses.

❏ Using the line for faxing only (external telephone is not necessary)

❏ Using the line for faxing mainly, and sometimes phoning

Receiving Faxes Without an External Phone Device

The printer automatically switches to receive faxes when the number of rings you set in **Rings to Answer** is complete.

Receiving Faxes With an External Phone Device

A printer with an external phone device works as follows.

❏ When the answering machine answers within the number of rings set in **Rings to Answer**:

- If the ringing is for a fax: The printer automatically switches to receive faxes.
- If the ringing is for a voice call; The answering machine can receive voice calls and record voice messages.

❏ When you pick up the handset within the number of rings set in **Rings to Answer**:

- If the ringing is for a fax: You can receive the fax using the same steps as for **Manual**. Select **Fax** on the printer's home screen, press the # button to select receiving a fax, and then press the ◇ button. Next hang up the handset.
- If the ringing is for a voice call: You can answer the phone as normal.

❏ When the ringing stops and the printer automatically switches to receive faxes:

- If the ringing is for a fax: The printer starts receiving faxes.
- If the ringing is for a voice call: You cannot answer the phone. Ask the person to call you back.

Note:
*Set the number of rings to answer for the answering machine to a lower number than the number set in **Rings to Answer**. Otherwise, the answering machine cannot receive voice calls to record voice messages. For details on setting up the answering machine, see the manual supplied with the answering machine.*

Related Information

➡ "Rings to Answer:" on page 264

Receiving Faxes by Making a Phone Call

You can receive a fax stored on another fax machine by dialing the fax number.

Receiving Faxes by Polling (Polling Receive)

You can receive a fax stored on another fax machine by dialing the fax number. Use this feature to receive a document from a fax information service.

Note:
❏ *If the fax information service has an audio guidance feature that you need to follow to receive a document, you cannot use this feature.*

❏ *To receive a document from a fax information service that uses audio guidance, just dial the fax number using the connected telephone, and operate the phone and the printer following the audio guidance.*

1. Select **Fax** on the home screen.

   To select an item, use the ▲▼◀▶ buttons, and then press the OK button.

2. Press the OK button, and then select **More**.

3. Select **Polling Receive**, and then select **On**.

4. Specify the recipient.

   Note:
   *If you cannot manually enter a fax number, **Direct Dialing Restrictions** in **Security Settings** is set to **On**. Select fax recipients from the contacts list or the sent fax history.*

5. Press the ⊡ button to start **Polling Receive**.

Menu Options for Faxing

Fax

Select the menus in **Fax** from home screen on the control panel.

Contacts:

Select a recipient from the contacts list. You can also add or edit a contact.

Recent:

Select a recipient from the sent fax history. You can also add the recipient to the contacts list.

Menu

You can select the following menus.

- ❏ Scan Settings
- ❏ Fax Send Settings
- ❏ More
- ❏ Contacts Manager

See "Related Information" below for more details.

Send Fax

Press the ⊡ button to send the fax.

Related Information

➡ "Selecting Recipients" on page 102

Scan Settings

Select the menus on the control panel as described below:

Fax > **Menu** > **Scan Settings**

Resolution:

Select the resolution of the outgoing fax. If you select a higher resolution, the data size becomes larger and it takes time to send the fax.

Density:

Sets the density of the outgoing fax. Press ▶ to make the density darker, and press ◀ to make it lighter.

ADF Continuous Scan:

Sending faxes by placing originals one by one, or by placing originals by size, you can send them as one document at their original sizes. See the related information below on this topic.

Original Size (Glass):

Select the size and orientation of the original you placed on the scanner glass.

Color Mode:

Select whether to scan in color or in monochrome.

Related Information

➡ "Sending Different Size Documents Using ADF (ADF Continuous Scan)" on page 104

Fax Send Settings

Select the menus on the control panel as described below:

Fax > **Menu** > **Fax Send Settings**

Direct Send:

Sends a monochrome fax while scanning the originals. Since scanned originals are not stored temporarily in the printer's memory even when sending a large volume of pages, you can avoid printer errors due to a lack of memory. Note that sending using this feature takes longer than not using this feature. See the related information below on this topic.

You cannot use this feature when sending a fax to multiple recipients.

Send Fax Later:

Sends a fax at a time you specified. Only a monochrome fax is available when using this option. See the related information below on this topic.

Add Sender Info:

Select the position where you want to include the header information (sender name and fax number) in the outgoing fax, or not to include the information.

- ❏ **Off**: Sends a fax with no header information.
- ❏ **Outside of Image**: Sends a fax with header information in the top white margin of the fax. This keeps the header from overlapping with the scanned image, however, the fax received by the recipient may be printed across two sheets depending on the size of the originals.
- ❏ **Inside of Image**: Sends a fax with header information approximately 7 mm lower than the top of the scanned image. The header may overlap with the image, however, the fax received by the recipient will not be split into two documents.

Add Sender Info:

Fax Header

Select the header for the recipient. To use this feature, you should register multiple headers in advance.

Additional Header Info:

Select the information you want to add. You can select one from **Your Phone Number** and **Destination List**.

Transmission Report:

Prints a transmission report after you send the fax.

Print on Error prints a report only when an error occurs.

When **Attach Fax image to report** has been set in **Settings** > **Fax Settings** > **Report Settings**, faxes with errors are also printed with the report.

Related Information

➡ "Sending Many Pages of a Monochrome Document (Direct Send)" on page 104
➡ "Sending Faxes in Monochrome at a Specified Time of the Day (Send Fax Later)" on page 104

More

Select the menus on the control panel as described below.

Fax > **Menu** > **More**

Transmission Log:

You can check the history of sent or received fax jobs.

Fax Report:

Last Transmission:

Prints a report for the previous fax that was sent or received through polling.

Fax Log:

Prints a transmission report. You can set to print this report automatically using the following menu.

Settings > **Fax Settings** > **Report Settings** > **Fax Log Auto Print**

Fax Settings List:

Prints the current fax settings.

Protocol Trace:

Prints a detailed report for the previous fax that was sent or received.

Reprint Faxes:

Reprints the received faxes in the printer.

Polling Receive:

When this is set to **On** and you call the sender's fax number, you can receive documents from the sender's fax machine. See the related information below for details on how to receive faxes using **Polling Receive**.

When you leave the Fax menu, the setting returns to **Off** (default).

Fax Settings:

Accesses **Settings** > **Fax Settings**. Access the setting menu as an administrator.

Related Information

➡ "Receiving Faxes by Polling (Polling Receive)" on page 107

Contacts Manager

Select the menus on the control panel as described below:

Fax > **Menu** > **Contacts Manager**

Accesses **Settings** > **Contacts Manager**.

You can add or edit your contacts.

Using Other Faxing Features

Printing Fax Report Manually

1. Select **Fax** on the home screen.

   To select an item, use the ▲ ▼ ◀ ▶ buttons, and then press the OK button.

2. Press OK button and select **More**.

3. Select **Fax Report**.

4. Select the report you want to print, and then follow the on-screen instructions.

   Note:
   *You can change the report format. From the home screen, select **Settings** > **Fax Settings** > **Report Settings**, and then change the **Attach Fax image to report** or **Report Format** settings.*

Sending a Fax from a Computer

You can send faxes from the computer by using the FAX Utility and PC-FAX driver.

Note:

- *Check if the FAX Utility and the printer's PC-FAX driver has been installed before using this feature.*

  "Application for Configuring Fax Operations and Sending Faxes (FAX Utility)" on page 253

  "Application for Sending Faxes (PC-FAX Driver)" on page 253

- *If the FAX Utility is not installed, install the FAX Utility using the EPSON Software Updater (application for updating software).*

Sending Documents Created Using an Application (Windows)

By selecting a printer fax from the **Print** menu of an application like Microsoft Word or Excel, you can directly transmit data such as documents, drawings, and tables you have created, with a cover sheet.

Note:
The following explanation uses Microsoft Word as an example. The actual operation may differ depending on the application you use. For details, see the application's help.

1. Using an application, create a document to transmit by fax.

2. Click **Print** from the **File** menu.

   The application's **Print** window appears.

3. Select **XXXXX (FAX)** (where XXXXX is your printer name) in **Printer**, and then check the settings for fax sending.

   ❏ Specify **1** in **Number of copies**. Fax may not be transmitted correctly if you specify **2** or more.

   ❏ You can send up to 100 pages in one fax transmission.

4. Click **Printer Properties** or **Properties** if you want to specify **Paper Size**, **Orientation**, **Color**, **Image Quality**, or **Character Density**.

   For details, see the PC-FAX driver help.

5. Click **Print**.

   Note:
   *When Using FAX Utility for the first time, a window for registering your information is displayed. Enter the necessary information, and then click **OK**.*

   Recipient Settings screen of FAX Utility is displayed.

6. When you want to send other documents in the same fax transmission, select **Add documents to send** checkbox.

   The screen for adding documents is displayed when you click **Next** in step 9.

7. Select **Attach a cover sheet** checkbox if necessary.

8. Specify a recipient.

   ❏ Selecting a recipient (name, fax number and so on) from **PC-FAX Phone Book**:

   If the recipient is saved in the phone book, do the steps below.

   ❶ Click the **PC-FAX Phone Book** tab.

   ❷ Select the recipient from the list and click **Add**.

   ❏ Selecting a recipient (name, fax number and so on) from the contacts on the printer:

   If the recipient is saved in the contacts on the printer, do the steps below.

   ❶ Click the **Contacts on Printer** tab.

   ❷ Select contacts from the list and click **Add** to proceed to **Add to Recipient** window.

   ❸ Select the contacts from the list displayed, and then click **Edit**.

   ❹ Add the personal data such as **Company/Corp.** and **Title** as necessary, and then click **OK** to return to the **Add to Recipient** window.

   ❺ As necessary, select the checkbox of **Register in the PC-FAX Phone Book** to save the contacts to **PC-FAX Phone Book**.

   ❻ Click **OK**.

❏ Specifying a recipient (name, fax number and so on) directly:

Do the steps below.

❶ Click the **Manual Dial** tab.

❷ Enter the necessary information.

❸ Click **Add**.

Furthermore, by clicking **Save to Phone Book**, you can save the recipient in the list under the **PC-FAX Phone Book** tab.

Note:

❏ *If your printer's Line Type is set to **PBX** and the access code has been set to use # (hash) instead of entering the exact prefix code, enter # (hash). For details, see Line Type in Basic Settings from related information link below.*

❏ *If you have selected **Enter fax number twice** in the **Optional Settings** on the FAX Utility main screen, you need to enter the same number again when you click **Add** or **Next**.*

The recipient is added to the **Recipient List** displayed in the upper part of the window.

9. Click **Next**.

❏ When you have selected **Add documents to send** checkbox, follow the steps below to add documents in the **Document Merging** window.

❶ Open a document you want to add, and then select the same printer (fax name) in the **Print** window. The document is added to the **Document List to Merge** list.

❷ Click **Preview** to check the merged document.

❸ Click **Next**.

Note:

*The **Image Quality** and **Color** settings you have selected for the first document are applied to other documents.*

❏ When you have selected **Attach a cover sheet** checkbox, specify the content of the cover sheet in the **Cover Sheet Settings** window.

❶ Select a cover sheet from samples in the **Cover Sheet** list. Note that there is no function to create an original cover sheet or to add an original cover sheet to the list.

❷ Enter the **Subject** and **Message**.

❸ Click **Next**.

Note:

*Set the following as necessary in **Cover Sheet Settings**.*

❏ *Click **Cover Sheet Formatting** if you want to change the order of the items on the cover sheet. You can select the cover sheet size in **Paper Size**. You can also select a cover sheet at a different size to the document being transmitted.*

❏ *Click **Font** if you want to change the font used for the text on the cover sheet.*

❏ *Click **Sender Settings** if you want to change the sender information.*

❏ *Click **Detailed Preview** if you want to check the cover sheet with the subject and the message you entered.*

10. Check the transmission content and click **Send**.

Make sure the name and fax number of the recipient are correct before transmitting. Click **Preview** to preview the cover sheet and document to transmit.

Once transmission starts, a window displaying the transmission status appears.

Note:

- *To stop transmitting, select the data, and click* ***Cancel*** *. You can also cancel using the printer's control panel.*
- *If an error occurs during transmission, the* ***Communication error*** *window appears. Check the error information and retransmit.*
- *The Fax Status Monitor screen (the screen mentioned above where you can check the transmission status) is not displayed if Display Fax Status Monitor During Transmission is not selected in the* ***Optional Settings*** *screen of the FAX Utility main screen.*

Related Information

➡ "Basic Settings Menu" on page 263

Sending Documents Created Using an Application (Mac OS)

By selecting a fax-capable printer from the **Print** menu of a commercially available application, you can send data such as documents, drawings, and tables, you have created.

Note:
The following explanation uses Text Edit, a standard Mac OS application as an example.

1. Create the document you want to send by fax in an application.

2. Click **Print** from the **File** menu.

   The application's **Print** window is displayed.

3. Select your printer (fax name) in **Name**, click ▼ to display the detailed settings, check the print settings, and then click **OK**.

4. Make settings for each item.

   - Specify **1** in **Number of copies**. Even if you specify **2** or more, only 1 copy is sent.
   - You can send up to 100 pages in one fax transmission.

   Note:
   The page size of documents you can send is the same as the paper size you can fax from the printer.

5. Select Fax Settings from the popup menu, and then make settings for each item.

   See the PC-FAX driver's help for explanations on each setting item.

   Click at the bottom left of the window to open the PC-FAX driver's help.

6. Select the Recipient Settings menu, and then specify the recipient.

   ❏ Specifying a recipient (name, fax number, and so on) directly:

   Click the **Add** item, enter the necessary information, and then click . The recipient is added to the Recipient List displayed in the upper part of the window.

   If you have selected "Enter fax number twice" in the PC-FAX driver settings, you need to enter the same number again when you click .

   If your fax connection line requires a prefix code, enter External Access Prefix.

   Note:
   *If your printer's Line Type is set to **PBX** and the access code has been set to use # (hash) instead of entering the exact prefix code, enter # (hash). For details, see Line Type in Basic Settings from Related Information link below.*

   ❏ Selecting a recipient (name, fax number, and so on) from the phone book:

   If the recipient is saved in the phone book, click . Select the recipient from the list, and then click **Add** > **OK**.

   If your fax connection line requires a prefix code, enter External Access Prefix.

   Note:
   *If your printer's Line Type is set to **PBX** and the access code has been set to use # (hash) instead of entering the exact prefix code, enter # (hash). For details, see Line Type in Basic Settings from Related Information link below.*

7. Check the recipient settings, and then click **Fax**.

   Sending starts.

   Make sure the name and fax number of the recipient are correct before transmitting.

   Note:
   ❏ *If you click the printer icon in Dock, the transmission status check screen is displayed. To stop sending, click the data, and then click **Delete**.*

   ❏ *If an error occurs during transmission, the **Sending failed** message is displayed. Check the transmission records on the **Fax Transmission Record** screen.*

   ❏ *Mixed paper size documents may not be sent correctly.*

Related Information

➡ "Basic Settings Menu" on page 263

Receiving Faxes on a Computer

Faxes can be received by a printer and saved in PDF format on a computer connected to the printer. Use the FAX Utility (application) to make settings.

For details on how to operate FAX Utility, see Basic Operations in the FAX Utility help (displayed on the main window). If the password entry screen is displayed on the computer screen while you are making settings, enter the password. If you do not know the password, contact your administrator.

Note:

❑ *Check if the FAX Utility and the printer's PC-FAX driver have been installed and the FAX Utility settings have been made before using this feature.*

"Application for Configuring Fax Operations and Sending Faxes (FAX Utility)" on page 253

"Application for Sending Faxes (PC-FAX Driver)" on page 253

❑ *If the FAX Utility is not installed, install the FAX Utility using the EPSON Software Updater (application for updating software).*

Important:

❑ *To receive faxes on a computer, the **Receive Mode** on the printer's control panel must be set to **Auto**. To make settings on the printer's control panel, select **Settings** > **Fax Settings** > **Basic Settings** > **Receive Mode**.*

❑ *The computer set to receive faxes should always be on. Received documents are saved in the printer's memory temporarily before the documents are saved on the computer. If you turn off the computer, the printer's memory might become full as it cannot send the documents to the computer.*

❑ *When received faxes have been temporarily saved to the printer's memory, the light turns on.*

❑ *To read the received faxes, you need to install a PDF viewer such as Adobe Reader in the computer.*

Related Information

➡ "Making Settings to Send and Receive Faxes on a Computer" on page 96

Checking for New Faxes (Windows)

By setting up a computer to save faxes received by the printer, you can check the processing status of received faxes, and whether or not there are any new faxes using the fax icon on the Windows task bar. By setting up the computer to display a notification when new faxes are received, a notification screen pops up near the Windows system tray, and you can check the new faxes.

Note:

❑ *Received fax data saved to the computer is removed from the printer's memory.*

❑ *You need Adobe Reader to view the received faxes saved as PDF files.*

Using the Fax Icon on the Task Bar (Windows)

You can check for new faxes and the operation status by using the fax icon displayed on the Windows taskbar.

1. Check the icon.

   ❑ : Standing by.

   ❑ : Checking for new faxes.

   ❑ : Importing new faxes is complete.

2. Right-click the icon, and then click **View Receiving Fax Record**.

   The **Receiving Fax Record** screen is displayed.

3. Check the date and the sender in the list, and then open the received file as a PDF.

   Note:
   - ❏ *Received faxes are automatically renamed using the following naming format.*

     YYYYMMDDHHMMSS_xxxxxxxxxx_nnnnn (Year/Month/Day/Hour/Minute/Second_sender's number)
   - ❏ *You can also open the received fax folder directly when you right-click the icon. For details, see **Optional Settings** in the FAX Utility and its help (displayed on the main window).*

While the fax icon indicates that it is standing by, you can check for new faxes instantly by selecting **Check new faxes now**.

Using the Notification Window (Windows)

When you set to notify you the new faxes exist, a notification window is displayed near the task bar for each the fax.

1. Check the notification screen displayed on your computer screen.

   Note:
   The notification screen disappears if no operation is performed for a given length of time. You can change the notification settings such as the display time.

2. Click anywhere in the notification screen, except for the button.

   The **Receiving Fax Record** screen is displayed.

3. Check the date and the sender in the list, and then open the received file as a PDF.

   Note:
   - ❏ *Received faxes are automatically renamed using the following naming format.*

     YYYYMMDDHHMMSS_xxxxxxxxxx_nnnnn (Year/Month/Day/Hour/Minute/Second_sender's number)
   - ❏ *You can also open the received fax folder directly when you right-click the icon. For details, see **Optional Settings** in the FAX Utility and its help (displayed on the main window).*

Checking for New Faxes (Mac OS)

You can check for new faxes using one of the following methods. This is available only on computers set to **"Save" (save faxes on this computer)**.

- ❏ Open the received fax folder (specified in **Received Fax Output Settings.**)
- ❏ Open the Fax Receive Monitor and click **Check new faxes now**.
- ❏ Notification that new faxes have been received

  Select the **Notify me of new faxes via a dock icon** in the **Fax Receive Monitor** > **Preferences** in the FAX Utility, the fax receive monitor icon on the Dock jumps to notify you that new faxes have arrived.

Open the Received Fax Folder from Received Fax Monitor (Mac OS)

You can open the save folder from the computer specified to receive faxes when selecting **"Save" (save faxes on this computer)**.

1. Click the received fax monitor icon on the Dock to open **Fax Receive Monitor**.

2. Select the printer and click **Open folder**, or double click the printer name.

3. Check the date and the sender in the file name, and then open the PDF file.

   Note:
   Received faxes are automatically renamed using the following naming format.

   YYYYMMDDHHMMSS_xxxxxxxxxx_nnnnn (Year/Month/Day/Hour/Minute/Second_sender's number)

   Information sent from the sender is displayed as the sender's number. This number may not be displayed depending on the sender.

Canceling the Feature that Saves Incoming Faxes to the Computer

You can cancel saving faxes to the computer by using the FAX Utility.

For details, see Basic Operations in the FAX Utility help (displayed on the main window).

Note:
- *If there are any faxes that have not been saved to the computer, you cannot cancel the feature that saves faxes on the computer.*
- *You can also change the settings on the printer. Contact your administrator for information on canceling settings to save received faxes on the computer.*

Maintaining the Printer

Checking the Ink Level. 120

Improving Print, Copy, Scan, and Fax Quality. 120

Cleaning the Printer. 128

Cleaning Spilled ink. 128

Checking the Total Number of Pages Fed Through the Printer. 128

Saving Power. 129

Installing or Uninstalling Applications Separately. 129

Transporting and Storing the Printer. 134

Checking the Ink Level

To confirm the actual ink remaining, visually check the ink levels in all of the printer's tanks.

Important:

Prolonged use of the printer when the ink level is below the lower line could damage the printer.

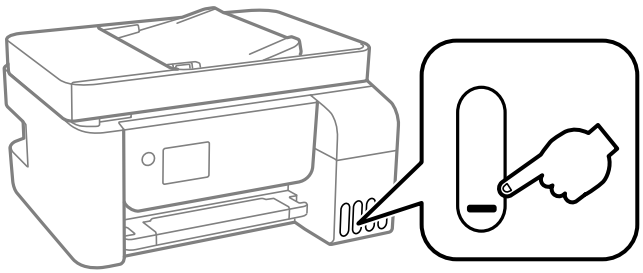

Note:

You can also check the approximate ink levels from the status monitor on the printer driver.

❑ *Windows*

*Click **EPSON Status Monitor 3** on the **Maintenance** tab.*

*If **EPSON Status Monitor 3** is disabled, click **Extended Settings** on the **Maintenance** tab, and then select **Enable EPSON Status Monitor 3**.*

❑ *Mac OS*

*Apple menu > **System Preferences** > **Printers & Scanners** (or **Print & Scan**, **Print & Fax**) > Epson(XXXX) > **Options & Supplies** > **Utility** > **Open Printer Utility** > **EPSON Status Monitor***

Related Information

➡ "Refilling the Ink Tanks" on page 197

Improving Print, Copy, Scan, and Fax Quality

Checking and Cleaning the Print Head

If the nozzles are clogged, the printouts become faint, there is visible banding, or unexpected colors appear. If the nozzles are severely clogged, a blank sheet will be printed. When print quality has declined, first use the nozzle check feature to check if the nozzles are clogged. If the nozzles are clogged, clean the print head.

Important:

- *Do not open the inner cover or turn off the printer during head cleaning. If the head cleaning is incomplete, you may not be able to print.*
- *Head cleaning consumes ink and should not be performed more than necessary.*
- *When ink is low, you may not be able to clean the print head.*
- *If print quality has not improved after repeating nozzle check and head cleaning 3 times, wait for at least 12 hours without printing, and then run the nozzle check again and repeat the head cleaning if necessary. We recommend turning off the printer by using the ⏻ button. If print quality has still not improved, run Power Cleaning.*
- *To prevent the print head from drying out, do not unplug the printer while the power is on.*

You can check and clean the print head by using the printer's control panel.

1. Select **Maintenance** on the printer's control panel.

   To select an item, use the ▲▼◀▶ buttons, and then press the OK button.

2. Select **Nozzle Check**.

3. Follow the on-screen instructions to load paper and print the nozzle check pattern.

4. Check the printed pattern to see if the print head nozzles are clogged.

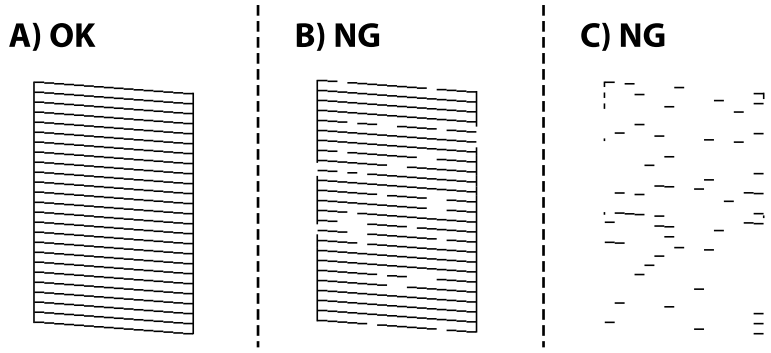

- A:

  All lines are printed. Select **No**. No further steps are needed.

- B or close to B

  Some nozzles are clogged. Select **Yes**, and then follow the on-screen instructions to clean the print head.

  When cleaning is finished, the nozzle check pattern is printed automatically.

- C or close to C

  If most lines are missing or not printed, this indicates most nozzles are clogged. Select **No** to exit the nozzle check feature, and then run Power Cleaning. For details, see "Related information" below.

5. Repeat cleaning and printing the pattern until all lines are printed completely.

Important:

If print quality has not improved after repeating nozzle check and head cleaning 3 times, wait for at least 12 hours without printing, and then run the nozzle check again and repeat the head cleaning if necessary. We recommend turning off the printer by using the ⏻ button. If print quality has still not improved, run Power Cleaning.

Note:
You can also check and clean the print head from the printer driver.

❑ *Windows*

*Click **Print Head Nozzle Check** on the **Maintenance** tab.*

❑ *Mac OS*

*Apple menu > **System Preferences** > **Printers & Scanners** (or **Print & Scan**, **Print & Fax**) > Epson(XXXX) > **Options & Supplies** > **Utility** > **Open Printer Utility** > **Print Head Nozzle Check***

Related Information

➡ "Running Power Cleaning" on page 122

Running Power Cleaning

The **Power Cleaning** utility allows you to replace all of the ink inside the ink tubes. In the following situations, you may need to use this feature to improve the print quality.

❑ You printed or performed head cleaning when the ink levels were too low to be seen in the ink tank windows.

❑ You performed the nozzle check and head cleaning 3 times and then waited for at least 12 hours without printing, but print quality still did not improve.

Before running this feature, read the following instructions.

Important:

Make sure that there is enough ink in the ink tanks.

Visually check all ink tanks are at least a third full. Low ink levels during Power Cleaning could damage the product.

Important:

An interval of 12 hours is required between each Power Cleaning.

Normally, a single Power Cleaning should resolve the print quality issue within 12 hours. Therefore, to avoid unnecessary ink usage, you must wait 12 hours before you try it again.

Important:

This feature effects the service life of the ink pads. The ink pads reach their capacity earlier by running this feature. If the ink pads have reached the end of their service life, contact Epson Support to request replacement.

Note:
When the ink levels are insufficient for Power Cleaning, you cannot run this feature. Even in this case, the levels for printing may remain.

1. Select **Maintenance** on the printer's control panel.

   To select an item, use the ▲ ▼ ◀ ▶ buttons, and then press the OK button.

2. Select **Power Cleaning**.

3. Follow the on-screen instructions to run the Power Cleaning feature.

   Note:
   If you cannot run this feature, solve the problems that are displayed on the screen. Next, follow this procedure from step 1 to run this feature again.

4. After running this feature, run the nozzle check to make sure the nozzles are not clogged.

   For details on how to run the nozzle check, see the related information below.

> ***Important:***
> *If print quality has not improved after running Power Cleaning, wait for at least 12 hours without printing, and then print the nozzle check pattern again. Run Head Cleaning or Power Cleaning again depending on the printed pattern. If quality still does not improve, contact Epson support.*

Note:
You can also run power cleaning from the printer driver.

❑ *Windows*

*Click **Power Cleaning** on the **Maintenance** tab.*

❑ *Mac OS*

*Apple menu > **System Preferences** > **Printers & Scanners** (or **Print & Scan**, **Print & Fax**) > Epson(XXXX) > **Options & Supplies** > **Utility** > **Open Printer Utility** > **Power Cleaning***

Related Information

➡ "Checking and Cleaning the Print Head" on page 120

Preventing nozzle clogging

Always use the power button when turning the printer on and off.

Check that the power light is off before you disconnect the power cord.

The ink itself can dry out if it is not covered. Just like placing a cap on a fountain pen or an oil pen to prevent it from drying, make sure the print head is capped properly to prevent the ink from drying.

When the power cord is unplugged or a power outage occurs while the printer is in operation, the print head may not be capped properly. If the print head is left as it is, it will dry out causing nozzles (ink outlets) to clog.

In these cases, turn the printer on and off again as soon as possible to cap the print head.

Aligning the Print Head

If you notice a misalignment of vertical lines or blurred images, align the print head.

1. Select **Maintenance** on the printer's control panel.

   To select an item, use the ▲ ▼ ◀ ▶ buttons, and then press the OK button.

2. Select **Print Head Alignment**.
3. Select one of the alignment menus.
   - ❏ Vertical lines look misaligned or the printouts look blurry : Select **Vertical Alignment**.
   - ❏ Horizontal banding occurs at regular intervals: Select **Horizontal Alignment**.
4. Follow the on-screen instructions to load paper and print the alignment pattern.

Cleaning the Paper Path for Ink Smears

When the printouts are smeared or scuffed, clean the roller inside.

> ***Important:***
> *Do not use tissue paper to clean the inside of the printer. The print head nozzles may be clogged with lint.*

1. Select **Maintenance** on the printer's control panel.

   To select an item, use the ▲▼◀▶ buttons, and then press the OK button.
2. Select **Paper Guide Cleaning**.
3. Follow the on-screen instructions to load paper and clean the paper path.
4. Repeat this procedure until the paper is not smeared with ink.

Cleaning the Scanner Glass

When the copies or scanned images are smeared, clean the scanner glass.

> ***Caution:***
> *Be careful not to trap your hand or fingers when opening or closing the document cover. Otherwise you may be injured.*

> ***Important:***
> *Never use alcohol or thinner to clean the printer. These chemicals can damage the printer.*

1. Open the document cover.

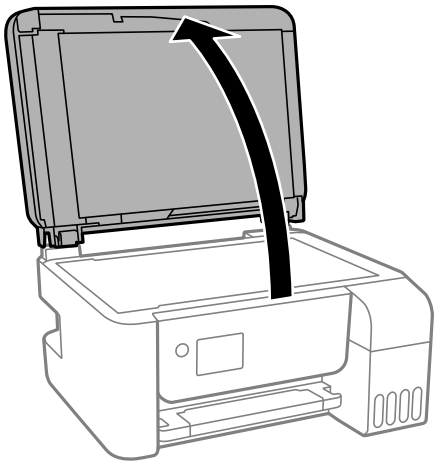

2. Use a soft, dry, clean cloth to clean the surface of the scanner glass.

> ***Important:***
>
> ❏ *If the glass surface is stained with grease or some other hard-to-remove material, use a small amount of glass cleaner and a soft cloth to remove it. Wipe off all remaining liquid.*
>
> ❏ *Do not press the glass surface too hard.*
>
> ❏ *Be careful not to scratch or damage the surface of the glass. A damaged glass surface can decrease the scan quality.*

Cleaning the ADF

When the copied or scanned images from the ADF are smeared or the originals do not feed in the ADF correctly, clean the ADF.

> ***Important:***
>
> *Never use alcohol or thinner to clean the printer. These chemicals can damage the printer.*

1. Open the ADF cover.

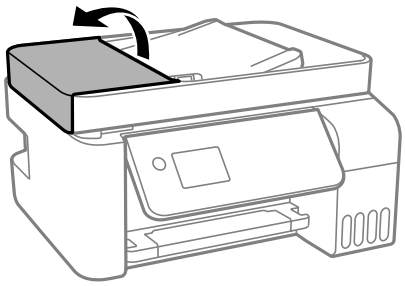

2. Use a soft, moist cloth to clean the roller and the interior of the ADF.

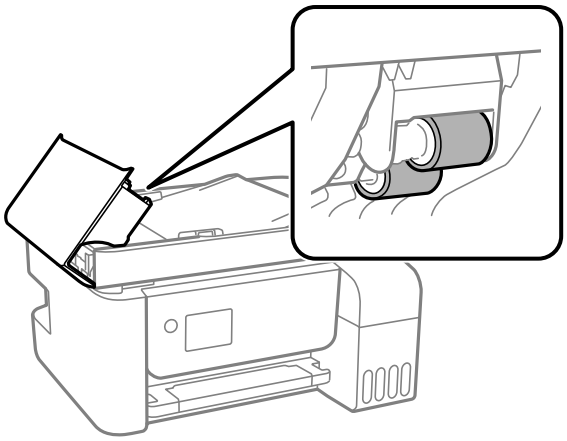

> ***Important:***
> *Using a dry cloth may damage the surface of the roller. Use the ADF after the roller has dried.*

3. Close the ADF cover, and then open the document cover.

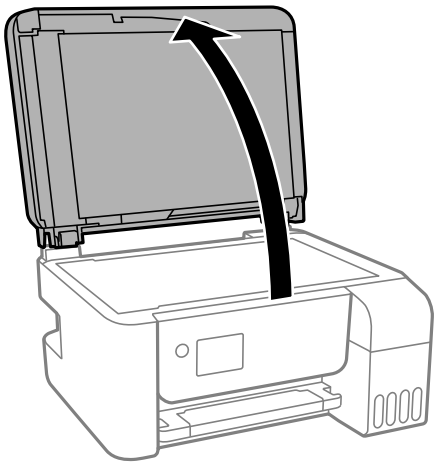

4. Clean the part that is shown in the illustration.

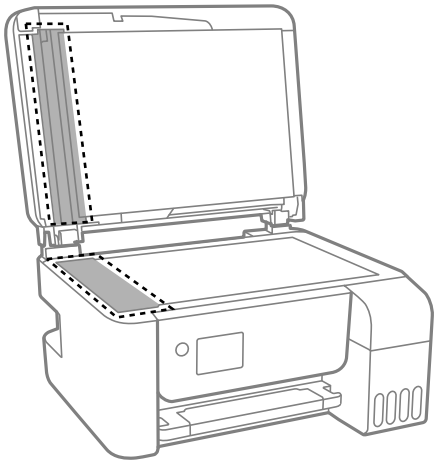

Important:

- *If the glass surface is stained with grease or some other hard-to-remove material, use a small amount of glass cleaner and a soft cloth to remove it. Wipe off all remaining liquid.*
- *Do not press the glass surface too hard.*
- *Be careful not to scratch or damage the surface of the glass. A damaged glass surface can decrease the scan quality.*

5. If the problem cannot be cleared, turn off the printer by pressing the ⏻ button, open the ADF cover, and then raise the ADF input tray.

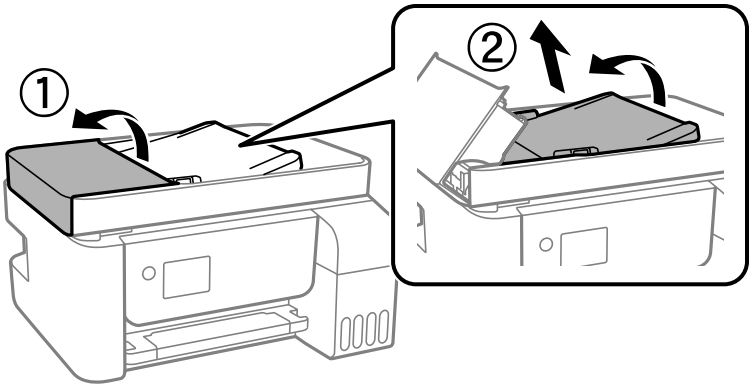

6. Clean the part that is shown in the illustration.

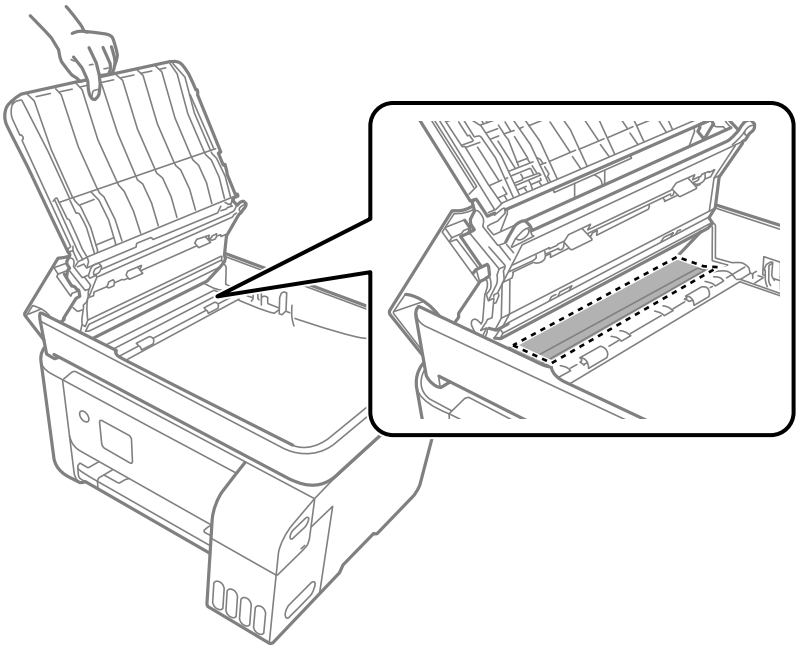

Cleaning the Printer

If the components and the case are dirty or dusty, turn off the printer and clean them using a soft, clean cloth that has been dampened with water. If you cannot remove the dirt, try adding a small amount of mild detergent to the damp cloth.

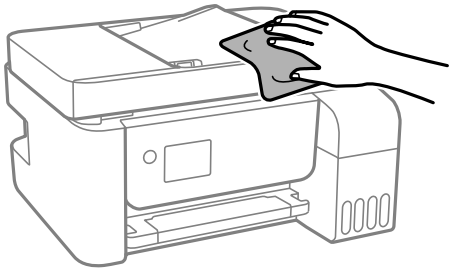

Important:

- ❏ *Be careful not to get water onto the printer mechanism or any electrical components. Otherwise, the printer could be damaged.*
- ❏ *Never use alcohol or paint thinner to cleanthe components and the case. These chemicals can damage them.*

Cleaning Spilled ink

If ink has been spilled, clean it up in the following ways.

- ❏ If ink adheres to the area around the tank, wipe it off using a napless, clean cloth or cotton swab.
- ❏ If ink spills on the desk or floor, wipe it off immediately. When ink is dried, it will be difficult to remove the smear. To prevent the smear from spreading, blot the ink with a dry cloth, and then wipe it with a moist cloth.
- ❏ If ink gets on your hands, wash them with water and soap.

Checking the Total Number of Pages Fed Through the Printer

You can check the total number of pages fed through the printer. The information is printed together with the nozzle check pattern.

1. Select **Maintenance** on the printer's control panel.

   To select an item, use the ▲▼◀▶ buttons, and then press the OK button.

2. Select **Nozzle Check**.

3. Follow the on-screen instructions to load paper and print the nozzle check pattern.

Note:
You can also check the total number of pages fed from the printer driver.

❏ *Windows*

*Click **Printer and Option Information** on the **Maintenance** tab.*

❏ *Mac OS*

*Apple menu > **System Preferences** > **Printers & Scanners** (or **Print & Scan**, **Print & Fax**) > Epson(XXXX) > **Options & Supplies** > **Utility** > **Open Printer Utility** > **Printer and Option Information***

Saving Power

The printer enters sleep mode or turns off automatically if no operations are performed for a set period. You can adjust the time before power management is applied. Any increase will affect the product's energy efficiency. Please consider the environment before making any change.

Saving Power - Control Panel

1. Select **Settings** on the home screen.

   To select an item, use the ▲▼◀▶ buttons, and then press the OK button.

2. Select **Printer Setup**.

3. Do one of the following.

   Note:
   *Your product may have the **Power Off Settings** or **Power Off Timer** feature depending on the location of purchase.*

   ❏ Select **Sleep Timer** or **Power Off Settings** > **Power Off If Inactive** or **Power Off If Disconnected**, and then make settings.

   ❏ Select **Sleep Timer** or **Power Off Timer**, and then make settings.

Installing or Uninstalling Applications Separately

Connect your computer to the network and install the latest version of applications from the website. Log in to your computer as an administrator. Enter the administrator password if the computer prompts you.

Installing the Applications Separately

Note:
When reinstalling an application, you need to uninstall it first.

1. Make sure the printer and the computer are available for communication, and the printer is connected to the Internet.

2. Start EPSON Software Updater.

   The screenshot is an example on Windows.

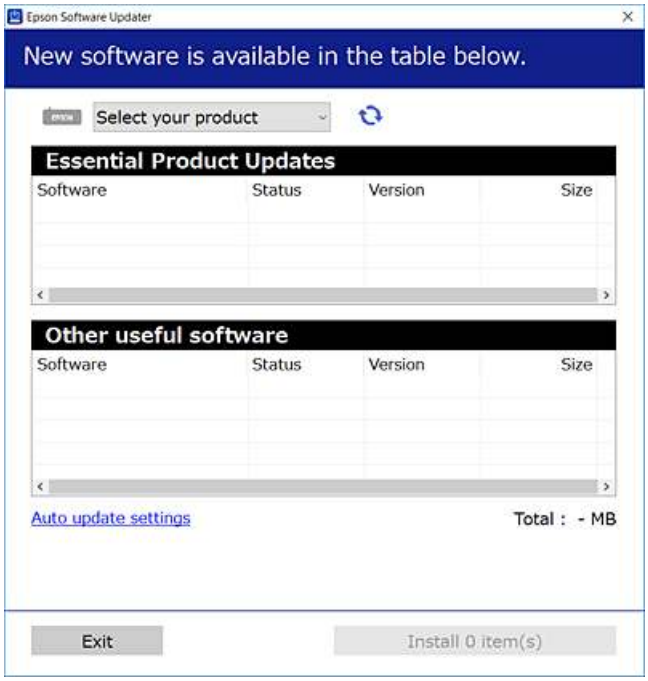

3. For Windows, select your printer, and then click to check for the latest available applications.

4. Select the items you want to install or update, and then click the install button.

> ***Important:***
>
> *Do not turn off or unplug the printer until the update is complete. Doing so may result in malfunction of the printer.*

Note:

- *You can download the latest applications from the Epson website.*

  http://www.epson.com

- *If you use Windows Server operating systems, you cannot use Epson Software Updater. Download the latest applications from the Epson website.*

Related Information

➡ "Application for Updating Software and Firmware (Epson Software Updater)" on page 256

➡ "Uninstalling Applications" on page 132

Checking if a genuine Epson printer driver is installed - Windows

You can check if a genuine Epson printer driver is installed on your computer by using one of the following methods.

Select **Control Panel** > **View devices and printers** (**Printers**, **Printers and Faxes**), and then do the following to open the print server properties window.

❏ Windows Windows 10/Windows 8.1/Windows 8/Windows 7/Windows Server 2019/Windows Server 2016/Windows Server 2012 R2/Windows Server 2012/Windows Server 2008 R2

Click the printer icon, and then click **Print server properties** at the top of the window.

❏ Windows Vista/Windows Server 2008

Right-click on the **Printers** folder, and then click **Run as administrator** > **Server Properties**.

❏ Windows XP/Windows Server 2003 R2/Windows Server 2003

From the **File** menu, select **Server Properties**.

Click the **Driver** tab. If your printer name is displayed in the list, a genuine Epson printer driver is installed on your computer.

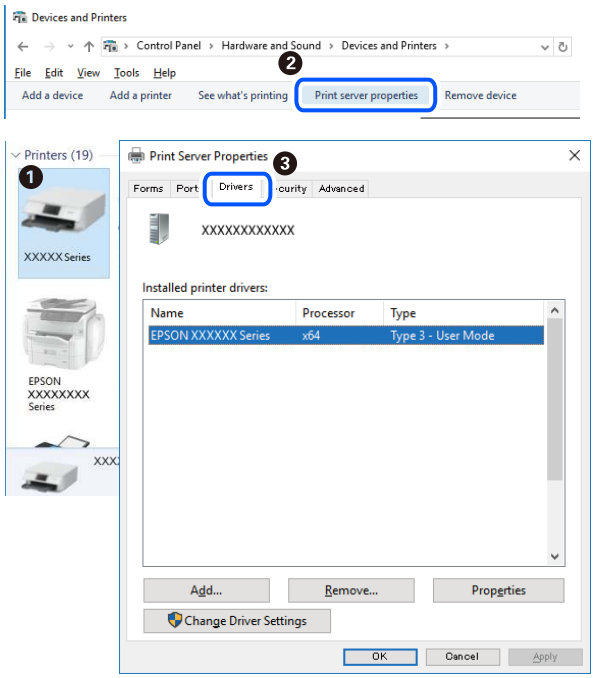

Related Information

➡ "Installing the Applications Separately" on page 129

Checking if a genuine Epson printer driver is installed - Mac OS

You can check if a genuine Epson printer driver is installed on your computer by using one of the following methods.

Select **System Preferences** from the Apple menu > **Printers & Scanners** (or **Print & Scan**, **Print & Fax**), and then select the printer. Click **Options & Supplies**, and if the **Options** tab and **Utility** tab are displayed on the window, a genuine Epson printer driver is installed on your computer.

Related Information

➡ "Installing the Applications Separately" on page 129

Adding the Printer (for Mac OS Only)

1. Select **System Preferences** from the Apple menu > **Printers & Scanners** (or **Print & Scan**, **Print & Fax**).
2. Click +, and then select **Add Other Printer or Scanner**.
3. Select your printer, and then select your printer from the **Use**.
4. Click **Add**.

   Note:
   If your printer is not listed, check that it is correctly connected to the computer and that the printer is on.

Uninstalling Applications

Log in to your computer as an administrator. Enter the administrator password if the computer prompts you.

Uninstalling Applications - Windows

1. Press the ⏻ button to turn off the printer.
2. Quit all running applications.

3. Open **Control Panel**:
   - ❏ Windows 10/Windows Server 2019/Windows Server 2016

     Click on the start button, and then select **Windows System** > **Control Panel**.
   - ❏ Windows 8.1/Windows 8/Windows Server 2012 R2/Windows Server 2012

     Select **Desktop** > **Settings** > **Control Panel**.
   - ❏ Windows 7/Windows Vista/Windows XP/Windows Server 2008 R2/Windows Server 2008/Windows Server 2003 R2/Windows Server 2003

     Click the start button and select **Control Panel**.
4. Open **Uninstall a program** (or **Add or Remove Programs**):
   - ❏ Windows 10/Windows 8.1/Windows 8/Windows 7/Windows Vista/Windows Server 2019/Windows Server 2016/Windows Server 2012 R2/Windows Server 2012/Windows Server 2008 R2/Windows Server 2008

     Select **Uninstall a program** in **Programs**.
   - ❏ Windows XP/Windows Server 2003 R2/Windows Server 2003

     Click **Add or Remove Programs**.
5. Select the application you want to uninstall.

   You cannot uninstall the printer driver if there is any print jobs. Delete or wait to be printed the jobs before uninstalling.
6. Uninstall the applications:
   - ❏ Windows 10/Windows 8.1/Windows 8/Windows 7/Windows Vista/Windows Server 2019/Windows Server 2016/Windows Server 2012 R2/Windows Server 2012/Windows Server 2008 R2/Windows Server 2008

     Click **Uninstall/Change** or **Uninstall**.
   - ❏ Windows XP/Windows Server 2003 R2/Windows Server 2003

     Click **Change/Remove** or **Remove**.

   Note:
   *If the **User Account Control** window is displayed, click **Continue**.*
7. Follow the on-screen instructions.

Uninstalling Applications - Mac OS

1. Download the Uninstaller using EPSON Software Updater.

   Once you have downloaded the Uninstaller, you do not need to download it again each time you uninstall the application.
2. Press the ⏻ button to turn off the printer.
3. To uninstall the printer driver or PC-FAX driver, select **System Preferences** from the Apple menu > **Printers & Scanners** (or **Print & Scan**, **Print & Fax**), and then remove the printer from the enabled printers list.
4. Quit all running applications.
5. Select **Go** > **Applications** > **Epson Software** > **Uninstaller**.

6. Select the application you want to uninstall, and then click **Uninstall**.

> ***Important:***
> *The Uninstaller removes all drivers for Epson inkjet printers on the computer. If you use multiple Epson inkjet printers and you only want to delete some drivers, delete all of them first, and then install the necessary printer driver again.*

Note:
*If you cannot find the application you want to uninstall in the application list, you cannot uninstall using the Uninstaller. In this situation, select **Go** > **Applications** > **Epson Software**, select the application you want to uninstall, and then drag it to the trash icon.*

Related Information

➡ "Application for Updating Software and Firmware (Epson Software Updater)" on page 256

Updating Applications and Firmware

You may be able to clear certain problems and improve or add functions by updating the applications and the firmware. Make sure you use the latest version of the applications and firmware.

1. Make sure that the printer and the computer are connected, and the computer is connected to the internet.

2. Start EPSON Software Updater, and update the applications or the firmware.

> ***Important:***
> *Do not turn off the computer or the printer until the update is complete; otherwise, the printer may malfunction.*

Note:
If you cannot find the application you want to update in the list, you cannot update using the EPSON Software Updater. Check for the latest versions of the applications from your local Epson website.

http://www.epson.com

Updating the Printer's Firmware Using the Control Panel

If the printer can be connected to the Internet, you can update the printer's firmware using the control panel. You can also set the printer to regularly check for firmware updates and notify you if any are available.

Related Information

➡ "Firmware Update" on page 268

Transporting and Storing the Printer

When you need to store the printer or transport it when moving or for repairs, follow the steps below to pack the printer.

1. Turn off the printer by pressing the ⏻ button.
2. Make sure the power light turns off, and then unplug the power cord.

> ***Important:***
> *Unplug the power cord when the power light is off. Otherwise, the print head does not return to the home position causing the ink to dry, and printing may become impossible.*

3. Disconnect all cables such as the power cord and USB cable.
4. Remove all of the paper from the printer.
5. Make sure there are no originals on the printer.

> ***Caution:***
> *Be careful not to trap your hand or fingers when opening or closing the scanner unit. Otherwise you may be injured.*

6. Make sure to install the cap onto the ink tank securely.

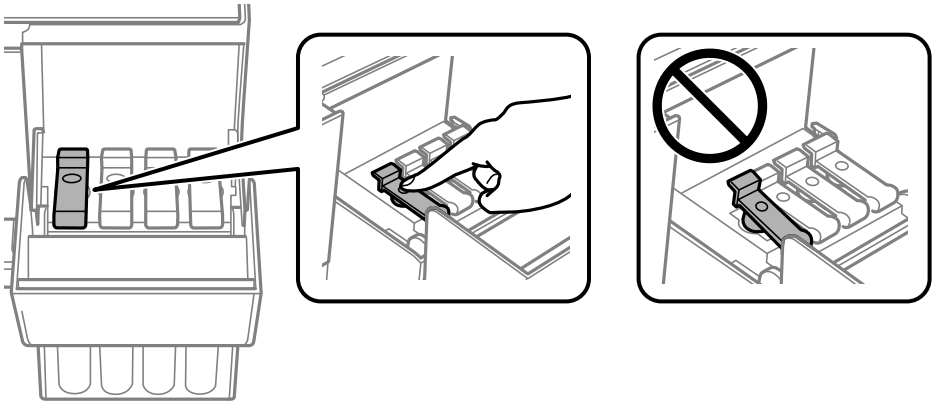

7. Close the ink tank cover securely.

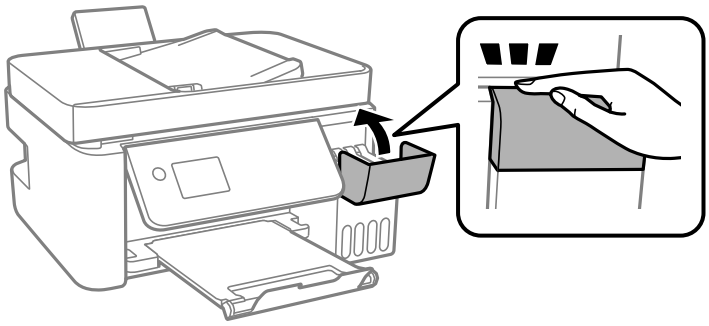

8. Prepare to pack the printer as shown below.

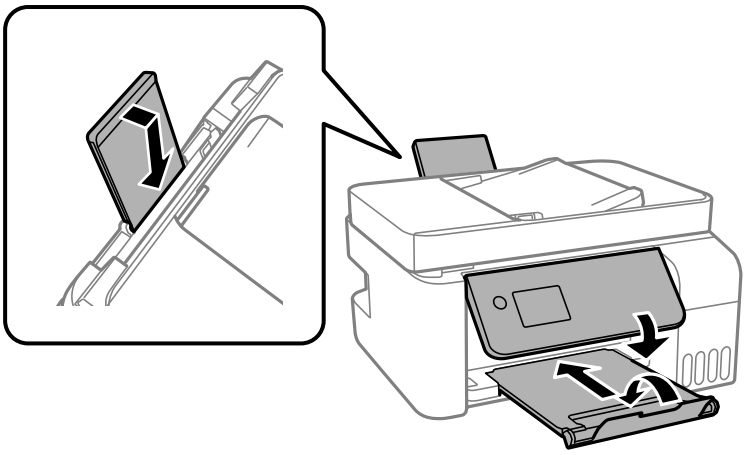

9. Place the printer in the plastic bag and fold it closed.

10. Pack the printer in its box using the protective materials.

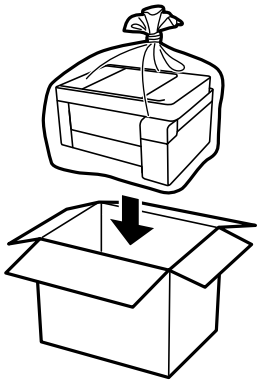

Important:

- *When storing or transporting the printer, place the printer in the plastic bag and fold it closed. Avoid tilting the printer, placing it vertically, or turning it upside down; otherwise ink may leak.*

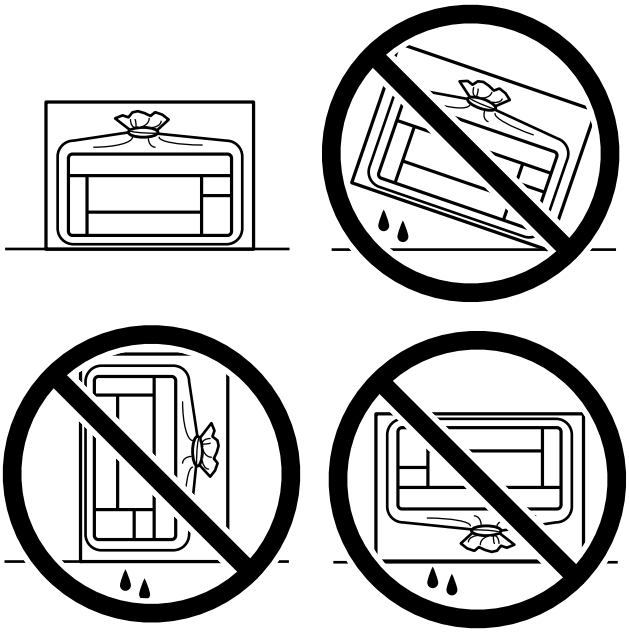

- *When storing or transporting an ink bottle, do not tilt the bottle and do not subject it to impacts or temperature changes. Otherwise, ink may leak even if the cap on the ink bottle is tightened securely. Be sure to keep the ink bottle upright when tightening the cap, and take precautions to prevent ink from leaking when transporting the bottle, for example, putting the bottle in a bag.*
- *Do not put opened ink bottles in the box with printer.*

If print quality has declined the next time you print, clean and align the print head.

Related Information

➡ "Checking and Cleaning the Print Head" on page 120
➡ "Aligning the Print Head" on page 123

Solving Problems

The Printer Does Not Work as Expected. 139

An Error Code is Displayed on the LCD Screen. 188

Paper Gets Jammed. 190

It is Time to Refill the Ink. 196

Printing, Copying, Scanning, and Faxing Quality is Poor. 201

Cannot Solve Problem. 221

The Printer Does Not Work as Expected

The Printer Does Not Turn On or Off

Power Does Not Turn On

The following causes can be considered.

The power cord is not plugged in properly to the electrical outlet.

Solutions

Make sure the power cord is securely plugged in.

The ⏻ button was not pressed for long enough.

Solutions

Hold down the ⏻ button for a little longer.

Power Does Not Turn Off

The ⏻ button was not pressed for long enough.

Solutions

Hold down the ⏻ button for a little longer. If you still cannot turn off the printer, unplug the power cord. To prevent the print head from drying out, turn the printer back on and turn it off by pressing the ⏻ button.

Power Turns Off Automatically

The Power Off Settings or Power Off Timer feature is enabled.

Solutions

- ❏ Select **Settings** > **Basic Settings** > **Power Off Settings**, and then disable the **Power Off If Inactive** and **Power Off If Disconnected** settings.
- ❏ Select **Settings** > **Basic Settings**, and then disable the **Power Off Timer** Setting.

Note:
*Your product may have the **Power Off Settings** or **Power Off Timer** feature depending on the location of purchase.*

Paper Does Not Feed Properly

No Paper Feeds

The following causes can be considered.

The installation location is inappropriate.

Solutions

Place the printer on a flat surface and operate in the recommended environmental conditions.

➡ "Environmental Specifications" on page 275

Unsupported paper is being used.

Solutions

Use paper supported by this printer.

➡ "Available Paper and Capacities" on page 245
➡ "Unavailable Paper Types" on page 247

Paper handling is inappropriate.

Solutions

Follow paper handling precautions.

➡ "Paper Handling Precautions" on page 29

Too many sheets are loaded in the printer.

Solutions

Do not load more than the maximum number of sheets specified for the paper. For plain paper, do not load above the line indicated by the triangle symbol on the edge guide.

➡ "Available Paper and Capacities" on page 245

The paper settings on the printer are incorrect.

Solutions

Make sure the paper size and paper type settings match the actual paper size and paper type loaded in the printer.

➡ "Paper Size and Type Settings" on page 29

Paper Feeds at a Slant

The following causes can be considered.

The installation location is inappropriate.

Solutions

Place the printer on a flat surface and operate in the recommended environmental conditions.

➡ "Environmental Specifications" on page 275

Unsupported paper is being used.

Solutions

Use paper supported by this printer.

➡ "Available Paper and Capacities" on page 245
➡ "Unavailable Paper Types" on page 247

Paper handling is inappropriate.

Solutions

Follow paper handling precautions.

➡ "Paper Handling Precautions" on page 29

The paper is loaded incorrectly.

Solutions

Load paper in the correct direction, and slide the edge guide against the edge of the paper.

➡ "Loading Paper in the Rear Paper Feeder" on page 31

Too many sheets are loaded in the printer.

Solutions

Do not load more than the maximum number of sheets specified for the paper. For plain paper, do not load above the line indicated by the triangle symbol on the edge guide.

➡ "Available Paper and Capacities" on page 245

The paper settings on the printer are incorrect.

Solutions

Make sure the paper size and paper type settings match the actual paper size and paper type loaded in the printer.

➡ "Paper Size and Type Settings" on page 29

Several Sheets of Paper are Fed at a Time

The following causes can be considered.

The installation location is inappropriate.

Solutions

Place the printer on a flat surface and operate in the recommended environmental conditions.

➡ "Environmental Specifications" on page 275

Unsupported paper is being used.

Solutions

Use paper supported by this printer.

➡ "Available Paper and Capacities" on page 245
➡ "Unavailable Paper Types" on page 247

Paper handling is inappropriate.

Solutions

Follow paper handling precautions.

➡ "Paper Handling Precautions" on page 29

The paper is moist or damp.

Solutions

Load new paper.

Static electricity is causing sheets of paper to stick to each other.

Solutions

Fan the paper before loading. If the paper still does not feed, load one sheet of paper at a time.

Too many sheets are loaded in the printer.

Solutions

Do not load more than the maximum number of sheets specified for the paper. For plain paper, do not load above the line indicated by the triangle symbol on the edge guide.

➡ "Available Paper and Capacities" on page 245

Multiple sheets of paper are loaded.

Solutions

Load one sheet of paper at a time.

The paper settings on the printer are incorrect.

Solutions

Make sure the paper size and paper type settings match the actual paper size and paper type loaded in the printer.

➡ "Paper Size and Type Settings" on page 29

Multiple sheets of paper feed at the same time during manual 2-sided printing.

Solutions

Remove any paper that is loaded in the paper source before you reload the paper.

Paper Out Error Occurs

Paper is not loaded in the center of the rear paper feeder.

Solutions

When a paper out error occurs although paper is loaded in the rear paper feeder, reload paper in the center of the rear paper feeder.

Original Does Not Feed in the ADF

The following causes can be considered.

Originals that are not supported by the ADF are being used.

Solutions

Use originals supported by the ADF.

➡ "ADF Specifications" on page 270

The originals are loaded incorrectly.

Solutions

Load originals in the correct direction, and slide the ADF edge guides against the edges of the originals.

Too many originals are loaded in the ADF.

Solutions

Do not load originals above the line indicated by the triangle symbol on the ADF.

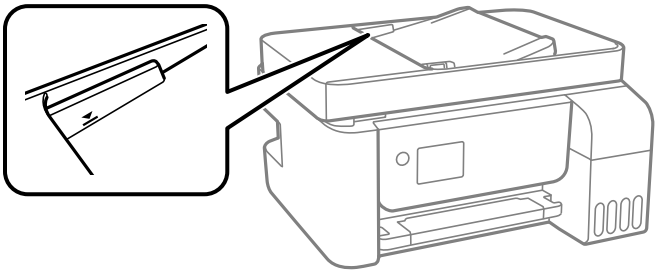

The original slips when paper dust adheres to the roller.

Solutions

Clean the inside of the ADF.

➡ "Cleaning the ADF" on page 125

Originals are not detected.

Solutions

On the screen for copy or scan, or fax, check that the ADF icon is on. If it is off, place the originals again.

Cannot Print

Cannot Print from Windows

Make sure the computer and the printer are connected correctly.

The cause and solution to the problem differ depending on whether or not they are connected.

Checking the Connection Status

Use Epson Printer Connection Checker to check the connection status for the computer and the printer. You may be able to solve the problem depending on the results of the check.

1. Double-click the **Epson Printer Connection Checker** icon on the desktop.

   Epson Printer Connection Checker starts.

   If there is no icon on the desktop, follow the methods below to start Epson Printer Connection Checker.

   ❏ Windows 10

   Click the start button, and then select **Epson Software** > **Epson Printer Connection Checker**.

   ❏ Windows 8.1/Windows 8

   Enter the application name in the search charm, and then select the displayed icon.

   ❏ Windows 7

   Click the start button, and then select **All Programs** > **Epson Software** > **Epson Printer Connection Checker**.

2. Follow the on-screen instructions to check.

   Note:
   If the printer name is not displayed, install a genuine Epson printer driver.

   "Checking if a genuine Epson printer driver is installed - Windows" on page 130

When you have identified the problem, follow the solution displayed on the screen.

When you cannot solve the problem, check the following according to your situation.

❏ The printer is not recognized over a network connection

"Cannot connect to a Network" on page 144

❏ The printer is not recognized using a USB connection

"The Printer Cannot Connect by USB (Windows)" on page 147

❏ The printer is recognized, but printing cannot be performed.

"Cannot Print Even Though a Connection has been Established (Windows)" on page 148

Cannot connect to a Network

The problem could be one of the following issues.

Something is wrong with the network devices for Wi-Fi connection.

Solutions

Turn off the devices you want to connect to the network. Wait for about 10 seconds, and then turn on the devices in the following order; wireless router, computer or smart device, and then printer. Move the printer and computer or smart device closer to the wireless router to help with radio wave communication, and then try to make network settings again.

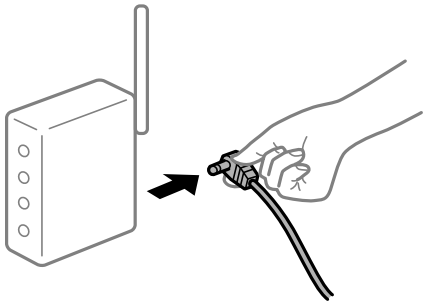

Devices cannot receive signals from the wireless router because they are too far apart.

Solutions

After moving the computer or the smart device and the printer closer to the wireless router, turn off the wireless router, and then turn it back on.

When changing the wireless router, the settings do not match the new router.

Solutions

Make the connection settings again so that they match the new wireless router.

The SSIDs connected from the computer or smart device and computer are different.

Solutions

When you are using multiple wireless routers at the same time or the wireless router has multiple SSIDs and devices are connected to different SSIDs, you cannot connect to the wireless router.

Connect the computer or smart device to the same SSID as the printer.

❏ Example of connecting to different SSIDs

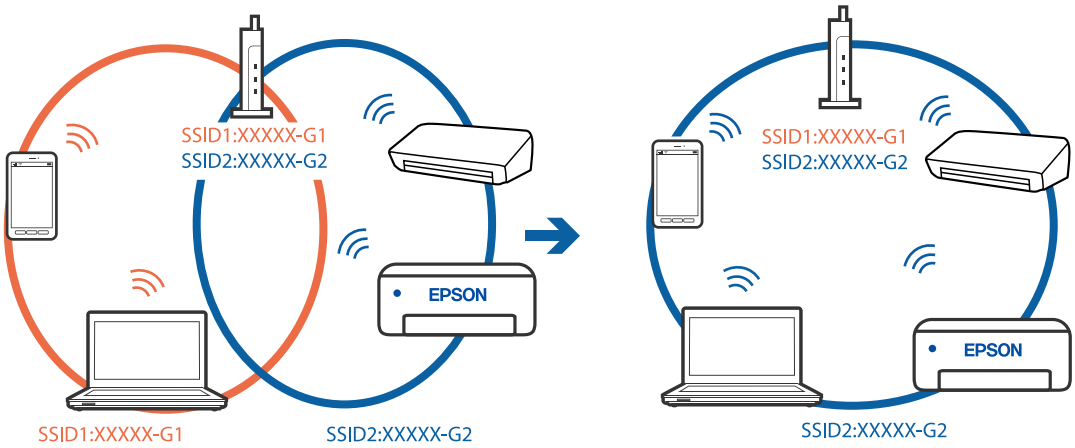

❏ Example of connecting to SSIDs with a different frequency range

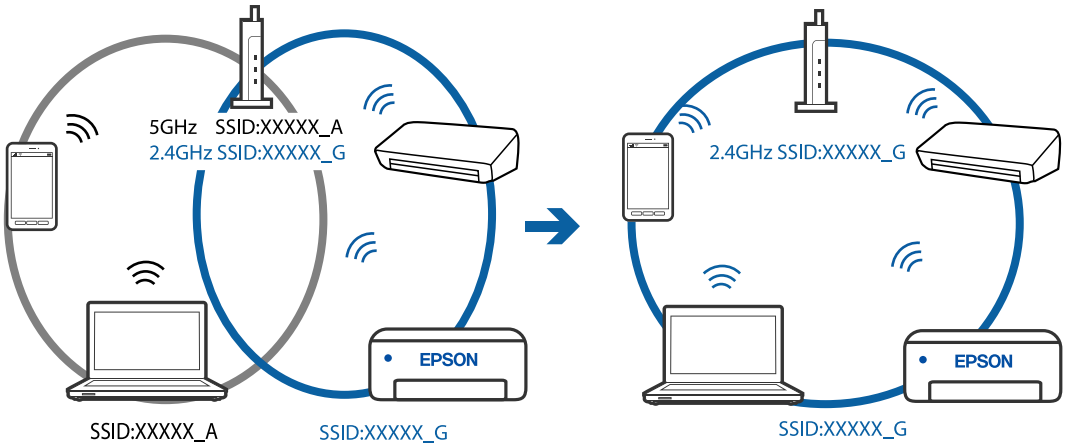

A privacy separator on the wireless router is available.

Solutions

Most wireless routers have a separator function that blocks communication between devices within the same SSID. If you cannot communicate between the printer and the computer or smart device even if they are connected to the same network, disable the separator function on the wireless router. See the manual provided with the wireless router for details.

The IP address is incorrectly assigned.

Solutions

If the IP address assigned to the printer is 169.254.XXX.XXX, and the subnet mask is 255.255.0.0, the IP address may not be assigned correctly.

Print the network connection report, and then check the IP address and the subnet mask assigned to the printer. To print a network connection report, select **Settings** > **Network Settings** > **Connection Check**.

Restart the wireless router or reset the network settings for the printer.

There is a problem with the network settings on the computer.

Solutions

Try accessing any website from your computer to make sure that your computer's network settings are correct. If you cannot access any website, there is a problem on the computer.

Check the network connection of the computer. See the documentation provided with the computer for details.

The printer has been connected by Ethernet using devices that support IEEE802.3az (Energy Efficient Ethernet).

Solutions

When you connect the printer by Ethernet using devices that support IEEE802.3az (Energy Efficient Ethernet), the following problems may occur depending on the hub or router that you are using.

❏ Connection becomes unstable, the printer is connected and disconnected again and again.

❏ Cannot connect to the printer.

❏ The communication speed becomes slow.

Follow the steps below to disable IEEE802.3az for the printer and then connect.

1. Remove the Ethernet cable connected to the computer and the printer.
2. When IEEE802.3az for the computer is enabled, disable it.
   See the documentation provided with the computer for details.
3. Connect the computer and the printer with an Ethernet cable directly.
4. On the printer, print a network connection report.
   "Printing a Network Connection Report" on page 236
5. Check the printer's IP address on the network connection report.
6. On the computer, access Web Config.
   Launch a Web browser, and then enter the printer's IP address.
   "Running Web Config on a Web Browser" on page 255
7. Select **Advanced Settings** from the list at the top right of the window.
8. Select **Network Settings** > **Wired LAN**.
9. Select **OFF** for **IEEE 802.3az**.
10. Click **Next**.
11. Click **OK**.
12. Remove the Ethernet cable connected to the computer and the printer.
13. If you disabled IEEE802.3az for the computer in step 2, enable it.
14. Connect the Ethernet cables that you removed in step 1 to the computer and the printer.

If the problem still occurs, devices other than the printer may be causing the problem.

The Printer Cannot Connect by USB (Windows)

The following causes can be considered.

The USB cable is not plugged into the electrical outlet correctly.

Solutions

Connect the USB cable securely to the printer and the computer.

There is a problem with the USB hub.

Solutions

If you are using a USB hub, try to connect the printer directly to the computer.

There is a problem with the USB cable or the USB inlet.

Solutions

If the USB cable cannot be recognized, change the port, or change the USB cable.

Cannot Print Even Though a Connection has been Established (Windows)

The following causes can be considered.

There is a problem with the software or data.

Solutions

- ❑ Make sure that a genuine Epson printer driver (EPSON XXXXX) is installed. If a genuine Epson printer driver is not installed, the available functions are limited. We recommend using a genuine Epson printer driver.
- ❑ If you are printing a large data size image, the computer may run out of memory. Print the image at a lower resolution or a smaller size.
- ❑ If you have tried all of the solutions and have not solved the problem, try uninstalling and then reinstalling the printer driver.
- ❑ You may be able to clear the problem by updating the software to the latest version. To check the software status, use the software update tool.

➡ "Checking if a genuine Epson printer driver is installed - Windows" on page 130
➡ "Checking if a genuine Epson printer driver is installed - Mac OS" on page 131
➡ "Installing or Uninstalling Applications Separately" on page 129
➡ "Updating Applications and Firmware" on page 134

There is a problem with the printer's status.

Solutions

Click **EPSON Status Monitor 3** on the printer driver's **Maintenance** tab, and then check the printer status. If **EPSON Status Monitor 3** is disabled, click **Extended Settings** on the **Maintenance** tab, and then select **Enable EPSON Status Monitor 3**.

There is still a job waiting to be printed.

Solutions

Click **Print Queue** on the printer driver's **Maintenance** tab. If unnecessary data remains, select **Cancel all documents** from the **Printer** menu.

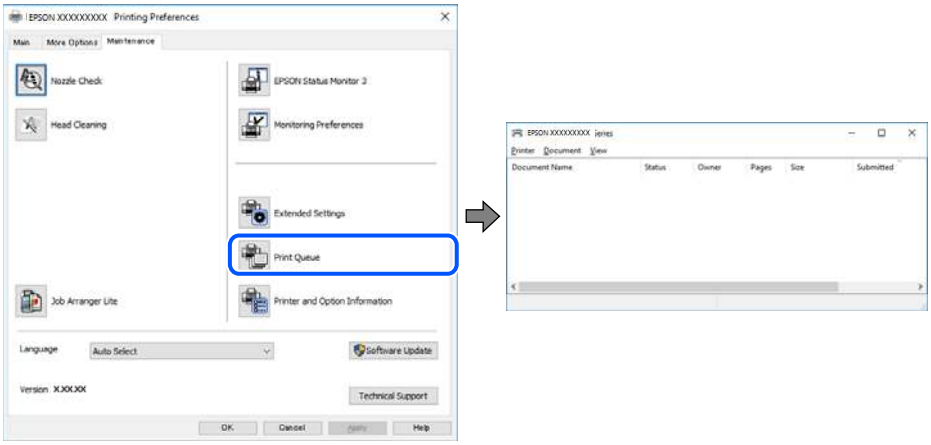

The printer is pending or offline.

Solutions

Click **Print Queue** on the printer driver's **Maintenance** tab.

If the printer is offline or pending, clear the offline or pending setting from the **Printer** menu.

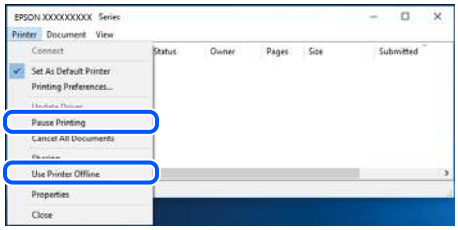

The printer is not selected as the default printer.

Solutions

Right-click the printer icon in **Control Panel** > **View devices and printers** (or **Printers**, **Printers and Faxes**) and click **Set as default printer**.

Note:
If there are multiple printer icons, see the following to select the correct printer.

Example)

USB connection: EPSON XXXX Series

Network connection: EPSON XXXX Series (network)

If you install the printer driver multiple times, copies of the printer driver may be created. If copies such as "EPSON XXXX Series (copy 1)" are created, right-click the copied driver icon, and then click **Remove Device**.

The printer port is not set correctly.

Solutions

Click **Print Queue** on the printer driver's **Maintenance** tab.

Make sure the printer port is set correctly as shown below in **Property** > **Port** from the **Printer** menu.

USB connection: **USBXXX**, Network connection: **EpsonNet Print Port**

Suddenly the Printer Cannot Print over a Network Connection

The problem could be one of the following issues.

The network environment has been changed.

Solutions

When you have changed the network environment, such as the wireless router or provider, try making network settings for the printer again.

Connect the computer or smart device to the same SSID as the printer.

Something is wrong with the network devices for Wi-Fi connection.

Solutions

Turn off the devices you want to connect to the network. Wait for about 10 seconds, and then turn on the devices in the following order; wireless router, computer or smart device, and then printer. Move the printer and computer or smart device closer to the wireless router to help with radio wave communication, and then try to make network settings again.

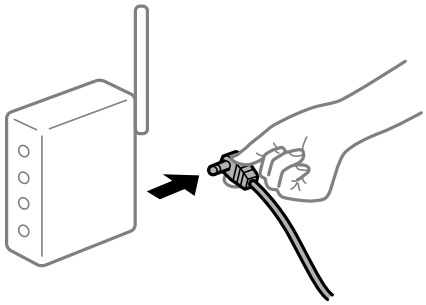

The printer is not connected to the network.

Solutions

Select **Settings** > **Network Settings** > **Connection Check**, and then print the network connection report. If the report shows that the network connection failed, check the network connection report and then follow the printed solutions.

There is a problem with the network settings on the computer.

Solutions

Try accessing any website from your computer to make sure that your computer's network settings are correct. If you cannot access any website, there is a problem on the computer.

Check the network connection of the computer. See the documentation provided with the computer for details.

There is still a job waiting to be printed.

Solutions

Click **Print Queue** on the printer driver's **Maintenance** tab. If unnecessary data remains, select **Cancel all documents** from the **Printer** menu.

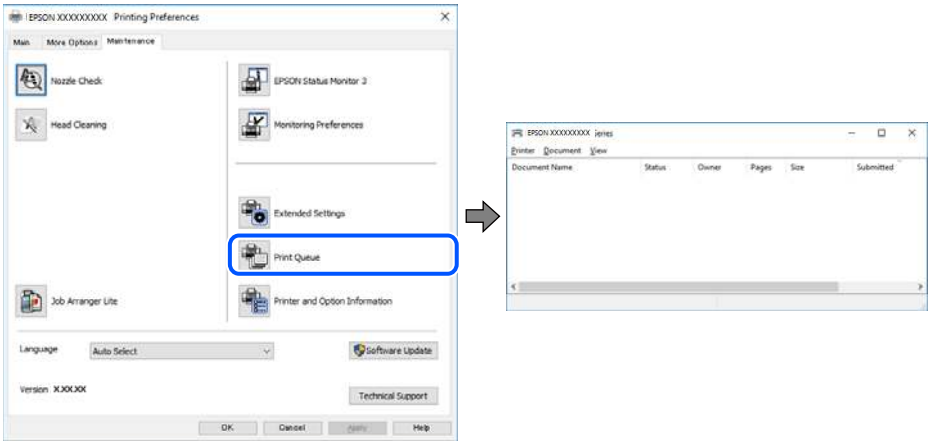

The printer is pending or offline.

Solutions

Click **Print Queue** on the printer driver's **Maintenance** tab.

If the printer is offline or pending, clear the offline or pending setting from the **Printer** menu.

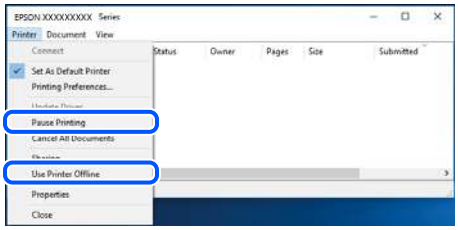

The printer is not selected as the default printer.

Solutions

Right-click the printer icon in **Control Panel** > **View devices and printers** (or **Printers**, **Printers and Faxes**) and click **Set as default printer**.

Note:
If there are multiple printer icons, see the following to select the correct printer.

Example)

USB connection: EPSON XXXX Series

Network connection: EPSON XXXX Series (network)

If you install the printer driver multiple times, copies of the printer driver may be created. If copies such as "EPSON XXXX Series (copy 1)" are created, right-click the copied driver icon, and then click **Remove Device**.

The printer port is not set correctly.

Solutions

Click **Print Queue** on the printer driver's **Maintenance** tab.

Make sure the printer port is set correctly as shown below in **Property** > **Port** from the **Printer** menu.

USB connection: **USBXXX**, Network connection: **EpsonNet Print Port**

Cannot Print from Mac OS

Make sure the computer and the printer are connected correctly.

The cause and solution to the problem differ depending on whether or not they are connected.

Checking the Connection Status

Use EPSON Status Monitor to check the connection status for the computer and the printer.

1. Select **System Preferences** from the Apple menu > **Printers & Scanners** (or **Print & Scan**, **Print & Fax**), and then select the printer.
2. Click **Options & Supplies** > **Utility** > **Open Printer Utility**.
3. Click **EPSON Status Monitor**.

When the remaining ink levels are displayed, a connection has been successfully established between the computer and the printer.

Check the following if a connection has not been established.

❏ The printer is not recognized over a network connection

"Cannot connect to a Network" on page 152

❏ The printer is not recognized using a USB connection

"The Printer Cannot Connect by USB (Mac OS)" on page 155

Check the following if a connection has been established.

❏ The printer is recognized, but printing cannot be performed.

"Cannot Print Even Though a Connection has been Established (Mac OS)" on page 156

Cannot connect to a Network

The problem could be one of the following issues.

Something is wrong with the network devices for Wi-Fi connection.

Solutions

Turn off the devices you want to connect to the network. Wait for about 10 seconds, and then turn on the devices in the following order; wireless router, computer or smart device, and then printer. Move the

printer and computer or smart device closer to the wireless router to help with radio wave communication, and then try to make network settings again.

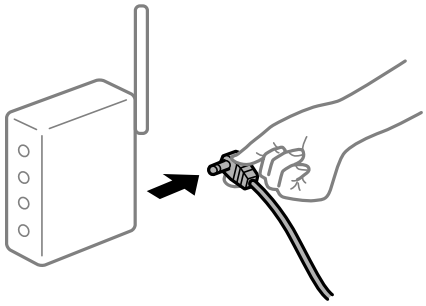

Devices cannot receive signals from the wireless router because they are too far apart.

Solutions

After moving the computer or the smart device and the printer closer to the wireless router, turn off the wireless router, and then turn it back on.

When changing the wireless router, the settings do not match the new router.

Solutions

Make the connection settings again so that they match the new wireless router.

The SSIDs connected from the computer or smart device and computer are different.

Solutions

When you are using multiple wireless routers at the same time or the wireless router has multiple SSIDs and devices are connected to different SSIDs, you cannot connect to the wireless router.

Connect the computer or smart device to the same SSID as the printer.

❏ Example of connecting to different SSIDs

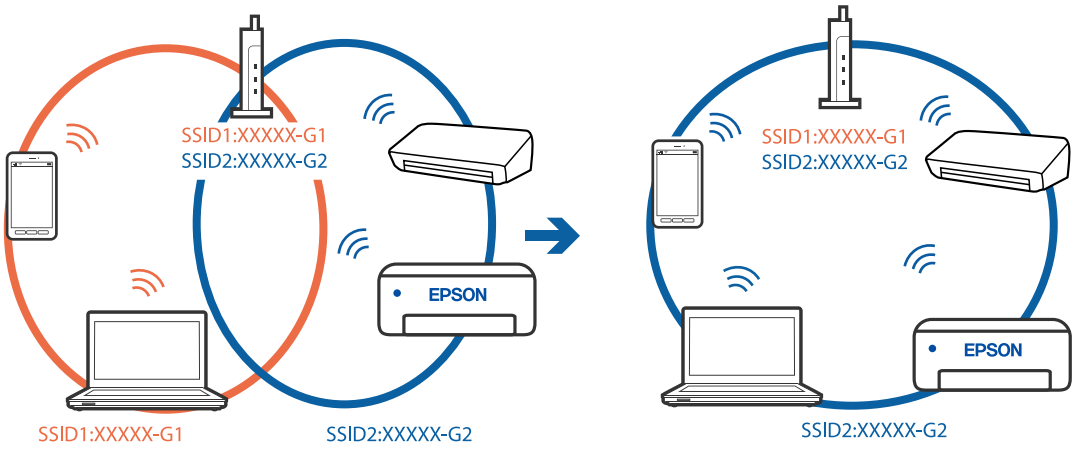

❏ Example of connecting to SSIDs with a different frequency range

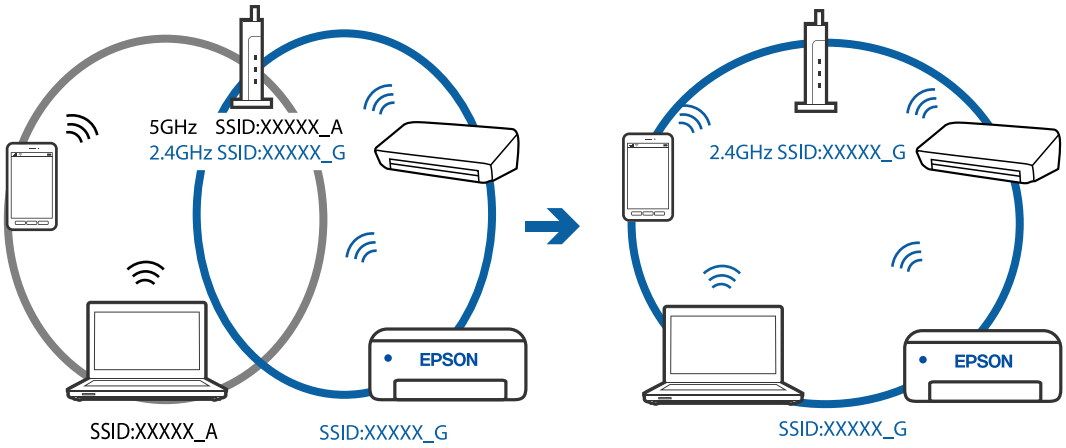

A privacy separator on the wireless router is available.

Solutions

Most wireless routers have a separator function that blocks communication between devices within the same SSID. If you cannot communicate between the printer and the computer or smart device even if they are connected to the same network, disable the separator function on the wireless router. See the manual provided with the wireless router for details.

The IP address is incorrectly assigned.

Solutions

If the IP address assigned to the printer is 169.254.XXX.XXX, and the subnet mask is 255.255.0.0, the IP address may not be assigned correctly.

Print the network connection report, and then check the IP address and the subnet mask assigned to the printer. To print a network connection report, select **Settings** > **Network Settings** > **Connection Check**.

Restart the wireless router or reset the network settings for the printer.

There is a problem with the network settings on the computer.

Solutions

Try accessing any website from your computer to make sure that your computer's network settings are correct. If you cannot access any website, there is a problem on the computer.

Check the network connection of the computer. See the documentation provided with the computer for details.

The device connected to the USB 3.0 port causes radio frequency interference.

Solutions

When you connect a device to the USB 3.0 port on a Mac, radio frequency interference may occur. Try the following if you cannot connect to wireless LAN (Wi-Fi) or if operations become unstable.

❏ Place the device that is connected to the USB 3.0 port further away from the computer.

The printer has been connected by Ethernet using devices that support IEEE802.3az (Energy Efficient Ethernet).

Solutions

When you connect the printer by Ethernet using devices that support IEEE802.3az (Energy Efficient Ethernet), the following problems may occur depending on the hub or router that you are using.

- ❏ Connection becomes unstable, the printer is connected and disconnected again and again.
- ❏ Cannot connect to the printer.
- ❏ The communication speed becomes slow.

Follow the steps below to disable IEEE802.3az for the printer and then connect.

1. Remove the Ethernet cable connected to the computer and the printer.
2. When IEEE802.3az for the computer is enabled, disable it.
   See the documentation provided with the computer for details.
3. Connect the computer and the printer with an Ethernet cable directly.
4. On the printer, print a network connection report.
   "Printing a Network Connection Report" on page 236
5. Check the printer's IP address on the network connection report.
6. On the computer, access Web Config.
   Launch a Web browser, and then enter the printer's IP address.
   "Running Web Config on a Web Browser" on page 255
7. Select **Advanced Settings** from the list at the top right of the window.
8. Select **Network Settings** > **Wired LAN**.
9. Select **OFF** for **IEEE 802.3az**.
10. Click **Next**.
11. Click **OK**.
12. Remove the Ethernet cable connected to the computer and the printer.
13. If you disabled IEEE802.3az for the computer in step 2, enable it.
14. Connect the Ethernet cables that you removed in step 1 to the computer and the printer.

If the problem still occurs, devices other than the printer may be causing the problem.

The Printer Cannot Connect by USB (Mac OS)

The following causes can be considered.

The USB cable is not plugged into the electrical outlet correctly.

Solutions

Connect the USB cable securely to the printer and the computer.

There is a problem with the USB hub.

Solutions

If you are using a USB hub, try to connect the printer directly to the computer.

There is a problem with the USB cable or the USB inlet.

Solutions

If the USB cable cannot be recognized, change the port, or change the USB cable.

Cannot Print Even Though a Connection has been Established (Mac OS)

The following causes can be considered.

There is a problem with the software or data.

Solutions

- ❏ Make sure that a genuine Epson printer driver (EPSON XXXXX) is installed. If a genuine Epson printer driver is not installed, the available functions are limited. We recommend using a genuine Epson printer driver.
- ❏ If you are printing a large data size image, the computer may run out of memory. Print the image at a lower resolution or a smaller size.
- ❏ If you have tried all of the solutions and have not solved the problem, try uninstalling and then reinstalling the printer driver.
- ❏ You may be able to clear the problem by updating the software to the latest version. To check the software status, use the software update tool.

➡ "Checking if a genuine Epson printer driver is installed - Windows" on page 130
➡ "Checking if a genuine Epson printer driver is installed - Mac OS" on page 131
➡ "Installing or Uninstalling Applications Separately" on page 129
➡ "Updating Applications and Firmware" on page 134

There is a problem with the status of the printer.

Solutions

Make sure the printer status is not **Pause**.

Select **System Preferences** from the **Apple** menu > **Printers & Scanners** (or **Print & Scan**, **Print & Fax**), and then double-click the printer. If the printer is paused, click **Resume**.

User feature restrictions are enabled for the printer.

Solutions

The printer may not print when the user feature restriction is enabled. Contact your printer administrator.

Suddenly the Printer Cannot Print over a Network Connection

The problem could be one of the following issues.

The network environment has been changed.

Solutions

When you have changed the network environment, such as the wireless router or provider, try making network settings for the printer again.

Connect the computer or smart device to the same SSID as the printer.

Something is wrong with the network devices for Wi-Fi connection.

Solutions

Turn off the devices you want to connect to the network. Wait for about 10 seconds, and then turn on the devices in the following order; wireless router, computer or smart device, and then printer. Move the printer and computer or smart device closer to the wireless router to help with radio wave communication, and then try to make network settings again.

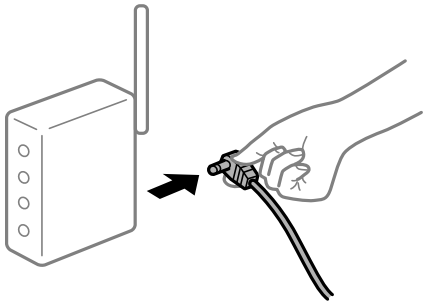

The printer is not connected to the network.

Solutions

Select **Settings** > **Network Settings** > **Connection Check**, and then print the network connection report. If the report shows that the network connection failed, check the network connection report and then follow the printed solutions.

There is a problem with the network settings on the computer.

Solutions

Try accessing any website from your computer to make sure that your computer's network settings are correct. If you cannot access any website, there is a problem on the computer.

Check the network connection of the computer. See the documentation provided with the computer for details.

The Print Settings Menu is Not Displayed.

The following causes can be considered.

The Epson Printer Driver has Not been Installed Correctly

Solutions

If the **Print Settings** menu is not displayed on macOS Catalina (10.15) or later, macOS High Sierra (10.13), macOS Sierra (10.12), OS X El Capitan (10.11), OS X Yosemite (10.10), OS X Mavericks (10.9),

OS X Mountain Lion (10.8), the Epson printer driver has not been installed correctly. Enable it from the following menu.

Select **System Preferences** from the Apple menu > **Printers & Scanners** (or **Print & Scan**, **Print & Fax**), remove the printer, and then add the printer again. See the following to add a printer.

"Adding the Printer (for Mac OS Only)" on page 132

macOS Mojave (10.14) cannot access **Print Settings** in applications made by Apple such as TextEdit.

Cannot Print from Smart Device

Make sure the smart device and the printer are connected correctly.

The cause and solution to the problem differ depending on whether or not they are connected.

Check the connection with the smart device

Use Epson Smart Panel to check the connection between the smart device and the printer.

Open the Epson Smart Panel. If you cannot connect to the printer, tap [+] at the top of the screen to reset.

If you are not using Epson Smart Panel, see the link below.

http://epson.sn

Cannot connect to a Network

The problem could be one of the following issues.

Something is wrong with the network devices for Wi-Fi connection.

Solutions

Turn off the devices you want to connect to the network. Wait for about 10 seconds, and then turn on the devices in the following order; wireless router, computer or smart device, and then printer. Move the printer and computer or smart device closer to the wireless router to help with radio wave communication, and then try to make network settings again.

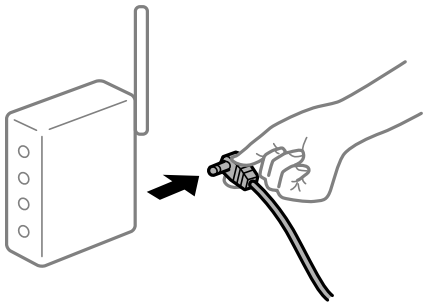

Devices cannot receive signals from the wireless router because they are too far apart.

Solutions

After moving the computer or the smart device and the printer closer to the wireless router, turn off the wireless router, and then turn it back on.

When changing the wireless router, the settings do not match the new router.

Solutions

Make the connection settings again so that they match the new wireless router.

The SSIDs connected from the computer or smart device and computer are different.

Solutions

When you are using multiple wireless routers at the same time or the wireless router has multiple SSIDs and devices are connected to different SSIDs, you cannot connect to the wireless router.

Connect the computer or smart device to the same SSID as the printer.

❏ Example of connecting to different SSIDs

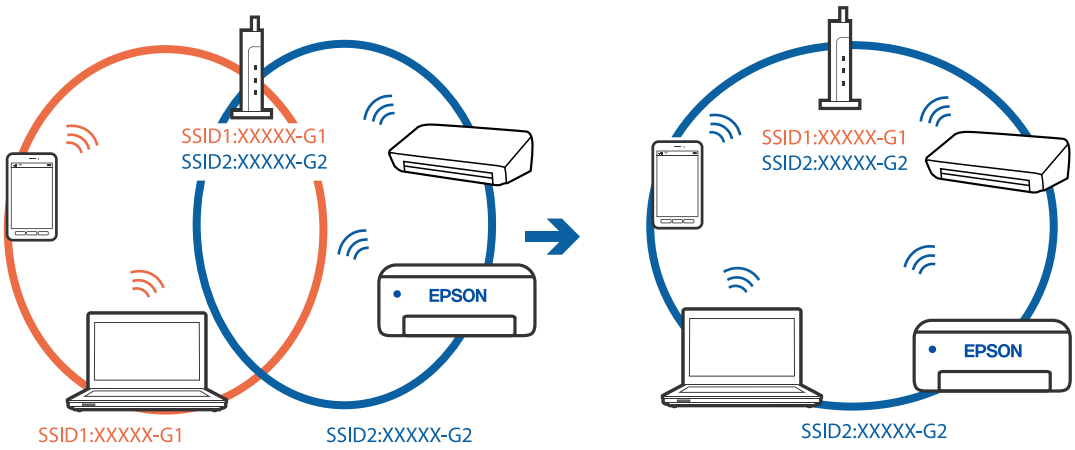

❏ Example of connecting to SSIDs with a different frequency range

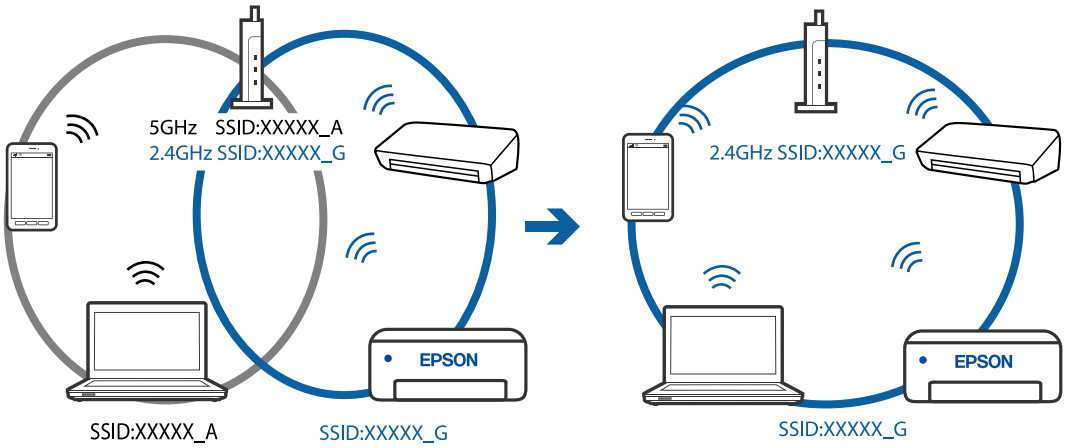

A privacy separator on the wireless router is available.

Solutions

Most wireless routers have a separator function that blocks communication between devices within the same SSID. If you cannot communicate between the printer and the computer or smart device even if they are connected to the same network, disable the separator function on the wireless router. See the manual provided with the wireless router for details.

The IP address is incorrectly assigned.

Solutions

If the IP address assigned to the printer is 169.254.XXX.XXX, and the subnet mask is 255.255.0.0, the IP address may not be assigned correctly.

Print the network connection report, and then check the IP address and the subnet mask assigned to the printer. To print a network connection report, select **Settings** > **Network Settings** > **Connection Check**.

Restart the wireless router or reset the network settings for the printer.

There is a problem with the network settings on the smart device.

Solutions

Try accessing any website from your smart device to make sure that your smart device's network settings are correct. If you cannot access any website, there is a problem on the smart device.

Check the network connection of the computer. See the documentation provided with the smart device for details.

Cannot Print Even Though a Connection has been Established (iOS)

The following causes can be considered.

Paper Setup Auto Display is disabled.

Solutions

Enable **Paper Setup Auto Display** in the following menu.

Settings > **Printer Setup** > **Paper Source Settings** > **Paper Setup Auto Display**

Important settings are disabled.

Solutions

Enable the AirPrint setting on Web Config.

Suddenly the Printer Cannot Print over a Network Connection

The problem could be one of the following issues.

The network environment has been changed.

Solutions

When you have changed the network environment, such as the wireless router or provider, try making network settings for the printer again.

Connect the computer or smart device to the same SSID as the printer.

Something is wrong with the network devices for Wi-Fi connection.

Solutions

Turn off the devices you want to connect to the network. Wait for about 10 seconds, and then turn on the devices in the following order; wireless router, computer or smart device, and then printer. Move the

printer and computer or smart device closer to the wireless router to help with radio wave communication, and then try to make network settings again.

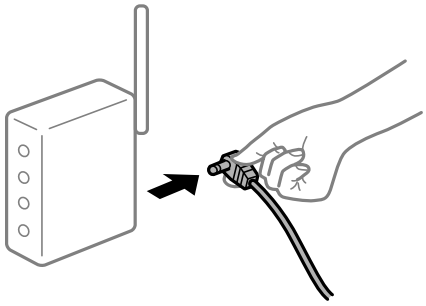

The printer is not connected to the network.

Solutions

Select **Settings** > **Network Settings** > **Connection Check**, and then print the network connection report. If the report shows that the network connection failed, check the network connection report and then follow the printed solutions.

There is a problem with the network settings on the smart device.

Solutions

Try accessing any website from your smart device to make sure that your smart device's network settings are correct. If you cannot access any website, there is a problem on the smart device.

Check the network connection of the computer. See the documentation provided with the smart device for details.

Printing received faxes is disabled under the current settings.

If **Save to Computer** is set to **Yes**, change the setting to **Yes and Print**, or disable **Save to Computer**.

You can find **Save to Computer** in **Settings** > **Fax Settings** > **Receive Settings**.

Cannot Start Scanning

Cannot Start Scanning from Windows

Make sure the computer and the printer are connected correctly.

The cause and solution to the problem differ depending on whether or not they are connected.

Checking the Connection Status

Use Epson Printer Connection Checker to check the connection status for the computer and the printer. You may be able to solve the problem depending on the results of the check.

1. Double-click the **Epson Printer Connection Checker** icon on the desktop.

   Epson Printer Connection Checker starts.

If there is no icon on the desktop, follow the methods below to start Epson Printer Connection Checker.

❏ Windows 10

Click the start button, and then select **Epson Software** > **Epson Printer Connection Checker**.

❏ Windows 8.1/Windows 8

Enter the application name in the search charm, and then select the displayed icon.

❏ Windows 7

Click the start button, and then select **All Programs** > **Epson Software** > **Epson Printer Connection Checker**.

2. Follow the on-screen instructions to check.

Note:
If the printer name is not displayed, install a genuine Epson printer driver.

"Checking if a genuine Epson printer driver is installed - Windows" on page 130

When you have identified the problem, follow the solution displayed on the screen.

When you cannot solve the problem, check the following according to your situation.

❏ The printer is not recognized over a network connection

"Cannot connect to a Network" on page 162

❏ The printer is not recognized using a USB connection

"The Printer Cannot Connect by USB (Windows)" on page 147

❏ The printer is recognized, but scanning cannot be performed.

"Cannot Scan Even Though a Connection has been Correctly Established (Windows)" on page 165

Cannot connect to a Network

The problem could be one of the following issues.

Something is wrong with the network devices for Wi-Fi connection.

Solutions

Turn off the devices you want to connect to the network. Wait for about 10 seconds, and then turn on the devices in the following order; wireless router, computer or smart device, and then printer. Move the printer and computer or smart device closer to the wireless router to help with radio wave communication, and then try to make network settings again.

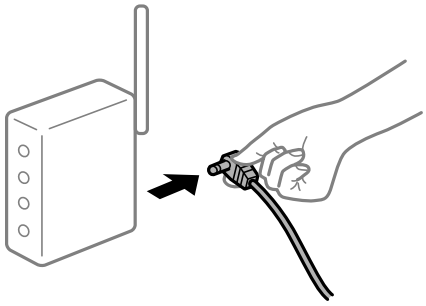

Devices cannot receive signals from the wireless router because they are too far apart.

Solutions

After moving the computer or the smart device and the printer closer to the wireless router, turn off the wireless router, and then turn it back on.

When changing the wireless router, the settings do not match the new router.

Solutions

Make the connection settings again so that they match the new wireless router.

The SSIDs connected from the computer or smart device and computer are different.

Solutions

When you are using multiple wireless routers at the same time or the wireless router has multiple SSIDs and devices are connected to different SSIDs, you cannot connect to the wireless router.

Connect the computer or smart device to the same SSID as the printer.

❏ Example of connecting to different SSIDs

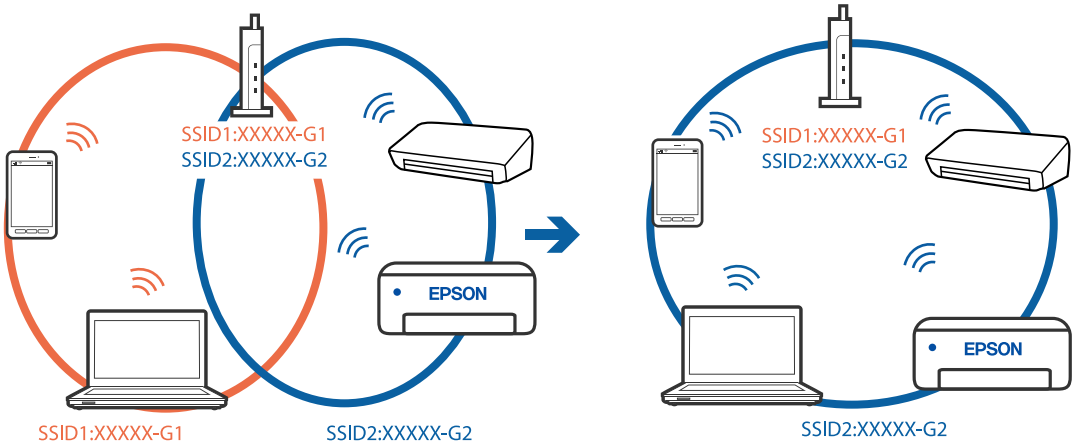

❏ Example of connecting to SSIDs with a different frequency range

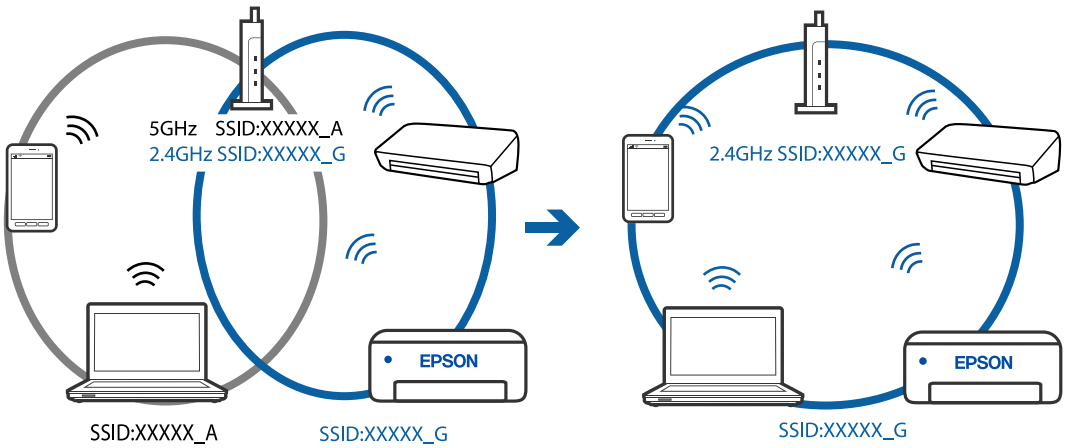

A privacy separator on the wireless router is available.

Solutions

Most wireless routers have a separator function that blocks communication between devices within the same SSID. If you cannot communicate between the printer and the computer or smart device even if they are connected to the same network, disable the separator function on the wireless router. See the manual provided with the wireless router for details.

The IP address is incorrectly assigned.

Solutions

If the IP address assigned to the printer is 169.254.XXX.XXX, and the subnet mask is 255.255.0.0, the IP address may not be assigned correctly.

Print the network connection report, and then check the IP address and the subnet mask assigned to the printer. To print a network connection report, select **Settings** > **Network Settings** > **Connection Check**.

Restart the wireless router or reset the network settings for the printer.

There is a problem with the network settings on the computer.

Solutions

Try accessing any website from your computer to make sure that your computer's network settings are correct. If you cannot access any website, there is a problem on the computer.

Check the network connection of the computer. See the documentation provided with the computer for details.

The printer has been connected by Ethernet using devices that support IEEE802.3az (Energy Efficient Ethernet).

Solutions

When you connect the printer by Ethernet using devices that support IEEE802.3az (Energy Efficient Ethernet), the following problems may occur depending on the hub or router that you are using.

- ❏ Connection becomes unstable, the printer is connected and disconnected again and again.
- ❏ Cannot connect to the printer.
- ❏ The communication speed becomes slow.

Follow the steps below to disable IEEE802.3az for the printer and then connect.

1. Remove the Ethernet cable connected to the computer and the printer.
2. When IEEE802.3az for the computer is enabled, disable it.

   See the documentation provided with the computer for details.
3. Connect the computer and the printer with an Ethernet cable directly.
4. On the printer, print a network connection report.

   “Printing a Network Connection Report” on page 236
5. Check the printer's IP address on the network connection report.

6. On the computer, access Web Config.
   Launch a Web browser, and then enter the printer's IP address.
   "Running Web Config on a Web Browser" on page 255
7. Select **Advanced Settings** from the list at the top right of the window.
8. Select **Network Settings** > **Wired LAN**.
9. Select **OFF** for **IEEE 802.3az**.
10. Click **Next**.
11. Click **OK**.
12. Remove the Ethernet cable connected to the computer and the printer.
13. If you disabled IEEE802.3az for the computer in step 2, enable it.
14. Connect the Ethernet cables that you removed in step 1 to the computer and the printer.

If the problem still occurs, devices other than the printer may be causing the problem.

The Printer Cannot Connect by USB (Windows)

The following causes can be considered.

The USB cable is not plugged into the electrical outlet correctly.

Solutions

Connect the USB cable securely to the printer and the computer.

There is a problem with the USB hub.

Solutions

If you are using a USB hub, try to connect the printer directly to the computer.

There is a problem with the USB cable or the USB inlet.

Solutions

If the USB cable cannot be recognized, change the port, or change the USB cable.

Cannot Scan Even Though a Connection has been Correctly Established (Windows)

Scanning at a high resolution over a network.

Solutions

Try scanning at a lower resolution.

Cannot Start Scanning from Mac OS

Make sure the computer and the printer are connected correctly.

The cause and solution to the problem differ depending on whether or not they are connected.

Checking the Connection Status

Use EPSON Status Monitor to check the connection status for the computer and the printer.

1. Select **System Preferences** from the Apple menu > **Printers & Scanners** (or **Print & Scan**, **Print & Fax**), and then select the printer.
2. Click **Options & Supplies** > **Utility** > **Open Printer Utility**.
3. Click **EPSON Status Monitor**.

When the remaining ink levels are displayed, a connection has been successfully established between the computer and the printer.

Check the following if a connection has not been established.

❏ The printer is not recognized over a network connection

"Cannot connect to a Network" on page 166

❏ The printer is not recognized using a USB connection

"The Printer Cannot Connect by USB (Mac OS)" on page 155

Check the following if a connection has been established.

❏ The printer is recognized, but scanning cannot be performed.

"Cannot Scan Even Though a Connection has been Correctly Established (Mac OS)" on page 170

Cannot connect to a Network

The problem could be one of the following issues.

Something is wrong with the network devices for Wi-Fi connection.

Solutions

Turn off the devices you want to connect to the network. Wait for about 10 seconds, and then turn on the devices in the following order; wireless router, computer or smart device, and then printer. Move the printer and computer or smart device closer to the wireless router to help with radio wave communication, and then try to make network settings again.

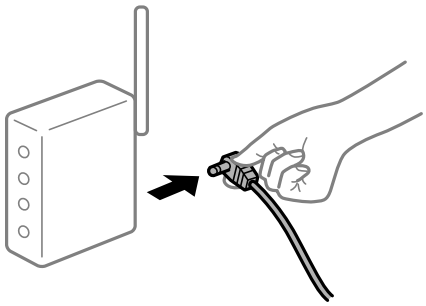

Devices cannot receive signals from the wireless router because they are too far apart.

Solutions

After moving the computer or the smart device and the printer closer to the wireless router, turn off the wireless router, and then turn it back on.

When changing the wireless router, the settings do not match the new router.

Solutions

Make the connection settings again so that they match the new wireless router.

The SSIDs connected from the computer or smart device and computer are different.

Solutions

When you are using multiple wireless routers at the same time or the wireless router has multiple SSIDs and devices are connected to different SSIDs, you cannot connect to the wireless router.

Connect the computer or smart device to the same SSID as the printer.

❏ Example of connecting to different SSIDs

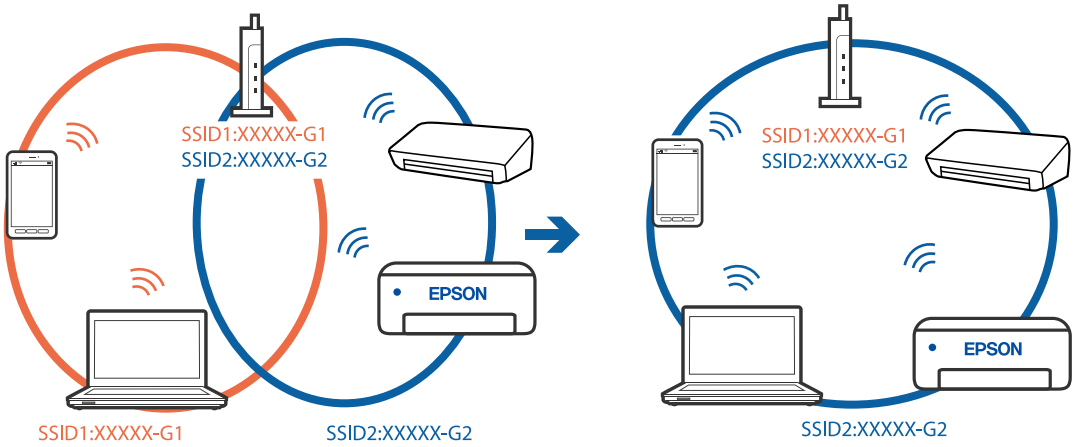

❏ Example of connecting to SSIDs with a different frequency range

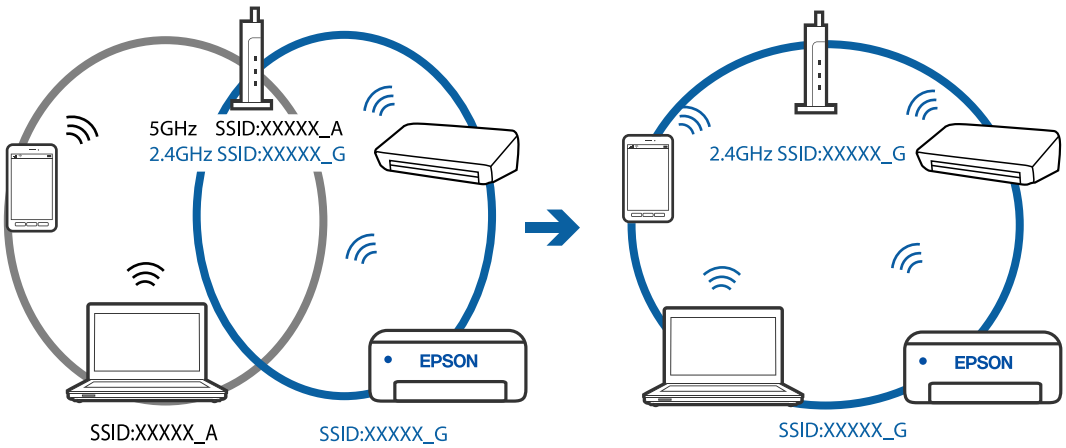

A privacy separator on the wireless router is available.

Solutions

Most wireless routers have a separator function that blocks communication between devices within the same SSID. If you cannot communicate between the printer and the computer or smart device even if they are connected to the same network, disable the separator function on the wireless router. See the manual provided with the wireless router for details.

The IP address is incorrectly assigned.

Solutions

If the IP address assigned to the printer is 169.254.XXX.XXX, and the subnet mask is 255.255.0.0, the IP address may not be assigned correctly.

Print the network connection report, and then check the IP address and the subnet mask assigned to the printer. To print a network connection report, select **Settings** > **Network Settings** > **Connection Check**.

Restart the wireless router or reset the network settings for the printer.

There is a problem with the network settings on the computer.

Solutions

Try accessing any website from your computer to make sure that your computer's network settings are correct. If you cannot access any website, there is a problem on the computer.

Check the network connection of the computer. See the documentation provided with the computer for details.

The device connected to the USB 3.0 port causes radio frequency interference.

Solutions

When you connect a device to the USB 3.0 port on a Mac, radio frequency interference may occur. Try the following if you cannot connect to wireless LAN (Wi-Fi) or if operations become unstable.

❏ Place the device that is connected to the USB 3.0 port further away from the computer.

The printer has been connected by Ethernet using devices that support IEEE802.3az (Energy Efficient Ethernet).

Solutions

When you connect the printer by Ethernet using devices that support IEEE802.3az (Energy Efficient Ethernet), the following problems may occur depending on the hub or router that you are using.

❏ Connection becomes unstable, the printer is connected and disconnected again and again.

❏ Cannot connect to the printer.

❏ The communication speed becomes slow.

Follow the steps below to disable IEEE802.3az for the printer and then connect.

1. Remove the Ethernet cable connected to the computer and the printer.
2. When IEEE802.3az for the computer is enabled, disable it.

   See the documentation provided with the computer for details.
3. Connect the computer and the printer with an Ethernet cable directly.

4. On the printer, print a network connection report.
   "Printing a Network Connection Report" on page 236
5. Check the printer's IP address on the network connection report.
6. On the computer, access Web Config.
   Launch a Web browser, and then enter the printer's IP address.
   "Running Web Config on a Web Browser" on page 255
7. Select **Advanced Settings** from the list at the top right of the window.
8. Select **Network Settings** > **Wired LAN**.
9. Select **OFF** for **IEEE 802.3az**.
10. Click **Next**.
11. Click **OK**.
12. Remove the Ethernet cable connected to the computer and the printer.
13. If you disabled IEEE802.3az for the computer in step 2, enable it.
14. Connect the Ethernet cables that you removed in step 1 to the computer and the printer.

If the problem still occurs, devices other than the printer may be causing the problem.

The Printer Cannot Connect by USB (Mac OS)

The following causes can be considered.

The USB cable is not plugged into the electrical outlet correctly.

Solutions

Connect the USB cable securely to the printer and the computer.

There is a problem with the USB hub.

Solutions

If you are using a USB hub, try to connect the printer directly to the computer.

There is a problem with the USB cable or the USB inlet.

Solutions

If the USB cable cannot be recognized, change the port, or change the USB cable.

Cannot Scan Even Though a Connection has been Correctly Established (Mac OS)

Scanning at a high resolution over a network.

Solutions

Try scanning at a lower resolution.

Cannot Start Scanning from Smart Device

Make sure the smart device and the printer are connected correctly.

The cause and solution to the problem differ depending on whether or not they are connected.

Check the connection with the smart device

Use Epson Smart Panel to check the connection between the smart device and the printer.

Open the Epson Smart Panel. If you cannot connect to the printer, tap [+] at the top of the screen to reset.

If you are not using Epson Smart Panel, see the link below.

http://epson.sn

Cannot connect to a Network

The problem could be one of the following issues.

Something is wrong with the network devices for Wi-Fi connection.

Solutions

Turn off the devices you want to connect to the network. Wait for about 10 seconds, and then turn on the devices in the following order; wireless router, computer or smart device, and then printer. Move the printer and computer or smart device closer to the wireless router to help with radio wave communication, and then try to make network settings again.

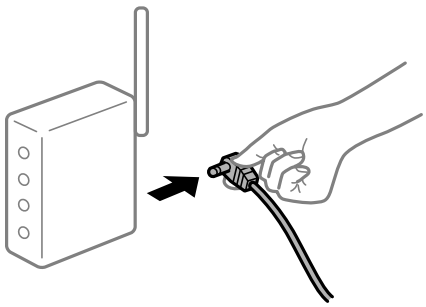

Devices cannot receive signals from the wireless router because they are too far apart.

Solutions

After moving the computer or the smart device and the printer closer to the wireless router, turn off the wireless router, and then turn it back on.

When changing the wireless router, the settings do not match the new router.

Solutions

Make the connection settings again so that they match the new wireless router.

The SSIDs connected from the computer or smart device and computer are different.

Solutions

When you are using multiple wireless routers at the same time or the wireless router has multiple SSIDs and devices are connected to different SSIDs, you cannot connect to the wireless router.

Connect the computer or smart device to the same SSID as the printer.

❏ Example of connecting to different SSIDs

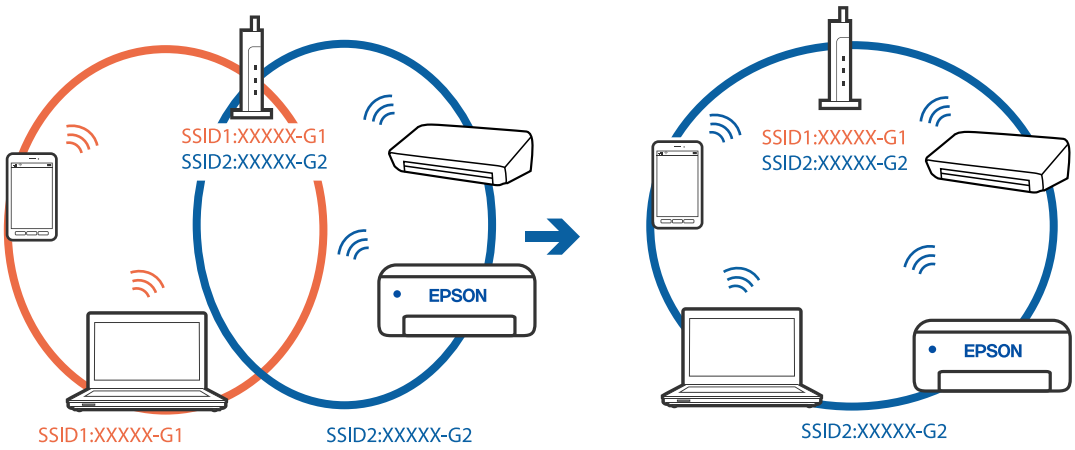

❏ Example of connecting to SSIDs with a different frequency range

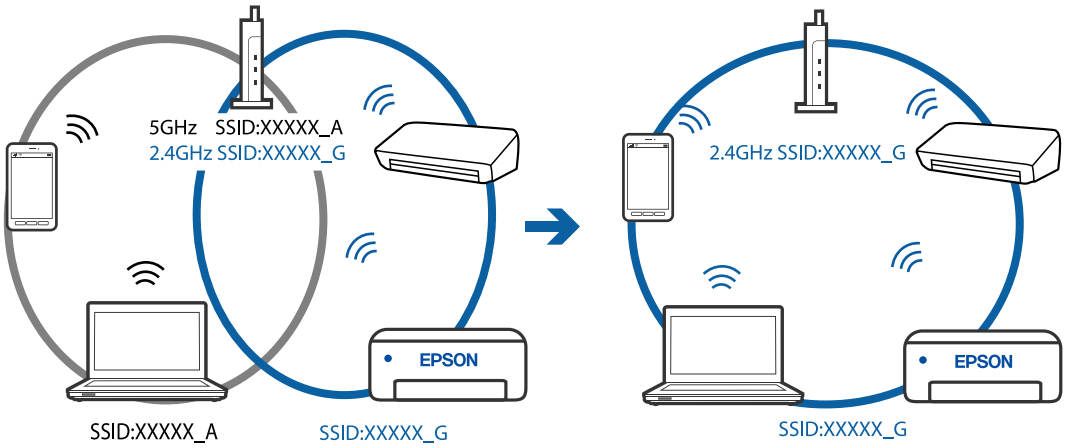

A privacy separator on the wireless router is available.

Solutions

Most wireless routers have a separator function that blocks communication between devices within the same SSID. If you cannot communicate between the printer and the computer or smart device even if they are connected to the same network, disable the separator function on the wireless router. See the manual provided with the wireless router for details.

The IP address is incorrectly assigned.

Solutions

If the IP address assigned to the printer is 169.254.XXX.XXX, and the subnet mask is 255.255.0.0, the IP address may not be assigned correctly.

Print the network connection report, and then check the IP address and the subnet mask assigned to the printer. To print a network connection report, select **Settings** > **Network Settings** > **Connection Check**.

Restart the wireless router or reset the network settings for the printer.

There is a problem with the network settings on the smart device.

Solutions

Try accessing any website from your smart device to make sure that your smart device's network settings are correct. If you cannot access any website, there is a problem on the smart device.

Check the network connection of the computer. See the documentation provided with the smart device for details.

Cannot Send or Receive Faxes

Cannot Send or Receive Faxes

The following causes can be considered.

There are some problems in telephone wall jack.

Solutions

Check that the telephone wall jack works by connecting a phone to it and testing it. If you cannot make or receive calls, contact your telecommunication company.

There are some problems in connecting to the telephone line.

Solutions

Select **Settings** > **Fax Settings** > **Check Fax Connection** on the printer's control panel to run the automatic fax connection check. Try the solutions printed on the report.

Communication error occurs.

Solutions

Select **Slow(9,600bps)** in **Settings** > **Fax Settings** > **Basic Settings** > **Fax Speed** on the printer's control panel.

Connected to a DSL phone line without DSL filter.

Solutions

To connect to a DSL phone line, you need to use a DSL modem equipped with a built-in DSL filter, or install a separate DSL filter to the line. Contact your DSL provider.

"Connecting to DSL or ISDN" on page 90

There are some problems in the DSL filter when you connect to a DSL phone line.

Solutions

If you can not send or receive fax, connect the printer directly to a telephone wall jack to see if the printer can send a fax. If it works, the problem may be caused by the DSL filter. Contact your DSL provider.

Cannot Send Faxes

The following causes can be considered.

The connection line is set to PSTN in a facility where a private branch exchange (PBX) is being used.

Solutions

Select **PBX** in **Settings** > **Fax Settings** > **Basic Settings** > **Line Type** on the printer's control panel.

Sending faxes without entering an access code in an environment in which a PBX is installed.

Solutions

If your phone system requires an external access code to get an outside line, register the access code to the printer, and enter # (hash) at the beginning of a fax number when sending.

The header information for outgoing faxes is not registered.

Solutions

Select **Settings** > **Fax Settings** > **Basic Settings** > **Header** and set up the header information. Some fax machines automatically reject incoming faxes that do not include header information.

Your caller ID is blocked.

Solutions

Contact your telecommunication company to unblock your caller ID. Some phones or fax machines automatically reject anonymous calls.

The recipient's fax number is wrong.

Solutions

Check that the recipient's number registered in your contacts list or that you entered directly using the keypad is correct. Or, check with the recipient that the fax number is correct.

The recipient's fax machine is not ready to receive faxes.

Solutions

Ask the recipient if the recipient's fax machine is ready to receive a fax.

The data being sent is too large.

Solutions

You can send faxes at a smaller data size using one of the following methods.

- ❏ When you send the fax in monochrome, enable **Direct Send** in **Fax** > **Fax Settings** > **Fax Send Settings**.

  "Sending Many Pages of a Monochrome Document (Direct Send)" on page 104

- ❏ Using the connected phone

  "Sending Faxes Dialing from the External Phone Device" on page 103

- ❏ Separating the originals

Cannot Receive Faxes

The following causes can be considered.

Subscribing to a call forwarding service.

Solutions

If you have subscribed to a call forwarding service, the printer may not be able to receive faxes. Contact the service provider.

The Receive Mode is set to Manual while an external phone device is connected to the printer.

Solutions

If an external phone device is connected to the printer and is sharing a phone line with the printer, select **Settings** > **Fax Settings** > **Basic Settings**, and then set **Receive Mode** to **Auto**.

The computer that will save the received faxes is not turned on.

Solutions

When you have made settings to save received faxes to a computer, turn on the computer. The received fax is deleted once it has been saved to the computer.

The sender's fax number has been registered to the Rejection Number List.

Solutions

Make sure that the sender's number can be deleted from the **Rejection Number List** before deleting it. Delete it from **Settings** > **Fax Settings** > **Basic Settings** > **Rejection Fax** > **Edit Blocked Number list**. Or disable the **Rejection Number List** in **Settings** > **Fax Settings** > **Basic Settings** > **Rejection Fax** > **Rejection Fax**. Faxes sent from numbers that have not been registered to this list are blocked when this setting is enabled.

The sender's fax number has not been registered in the contacts list.

Solutions

Register the sender's fax number to contact list. Or disable **Caller not in Contacts** in **Settings** > **Fax Settings** > **Basic Settings** > **Rejection Fax** > **Rejection Fax**. Faxes sent from numbers that have not been registered to this list are blocked.

The sender has sent the fax without header information.

Solutions

Ask the sender if header information is setup on their fax machine. Or, disable **Fax Header Blank** in **Settings** > **Fax Settings** > **Basic Settings** > **Rejection Fax** > **Rejection Fax**. Faxes that do not include header information are blocked when this setting is enabled.

Cannot Send Faxes to a Specific Recipient

The Fax Speed setting registered in the contact list is wrong.

Solutions

Select the recipient from the contact list, and then select **Edit** > **Fax Speed** > **Slow(9,600bps)**.

Cannot Send Faxes at a Specified Time

The printer's date and time is wrong.

Solutions

Select **Settings** > **Basic Settings** > **Date/Time Settings**, and then set the correct date and time.

Faxes Are Sent at the Wrong Size

The following causes can be considered.

The originals are not placed correctly.

Solutions

- ❏ Make sure the original is placed correctly against the alignment marks.
- ❏ If the edge of the scanned image is missing, move the original slightly away from the edge of the scanner glass. You cannot scan the area within approximately 1.5 mm (0.06 in.) from the edge of the scanner glass.

➡ "Placing Originals on the Scanner Glass" on page 38

There is dust or dirt on the originals or the scanner glass.

Solutions

Remove any dust or dirt that adheres to the originals, and clean the scanner glass.

➡ "Cleaning the Scanner Glass" on page 124

Received Faxes Are Not Printed

An error has occurred in the printer such as a paper jam.

Solutions

Clear the printer error, and then ask the sender to resend the fax.

Printing received faxes is disabled under the current settings.

Solutions

If **Save to Computer** is set to **Yes**, change the setting to **Yes and Print**, or disable **Save to Computer**.

You can find **Save to Computer** in **Settings** > **Fax Settings** > **Receive Settings**.

Cannot Send and Receive Faxes (Windows)

Make sure the computer and the printer are connected correctly. The cause and solution to the problem differ depending on whether or not they are connected.

Checking the Connection Status

Use Epson Printer Connection Checker to check the connection status for the computer and the printer. You may be able to solve the problem depending on the results of the check.

1. Double-click the **Epson Printer Connection Checker** icon on the desktop.

   Epson Printer Connection Checker starts.

   If there is no icon on the desktop, follow the methods below to start Epson Printer Connection Checker.

   ❏ Windows 10

   Click the start button, and then select **Epson Software** > **Epson Printer Connection Checker**.

   ❏ Windows 8.1/Windows 8

   Enter the application name in the search charm, and then select the displayed icon.

   ❏ Windows 7

   Click the start button, and then select **All Programs** > **Epson Software** > **Epson Printer Connection Checker**.

2. Follow the on-screen instructions to check.

   Note:
   If the printer name is not displayed, install a genuine Epson printer driver.

   "Checking if a genuine Epson printer driver is installed - Windows" on page 130

When you have identified the problem, follow the solution displayed on the screen.

When you cannot solve the problem, check the following according to your situation.

❏ The printer is not recognized over a network connection

"Cannot connect to a Network" on page 144

❏ The printer is not recognized using a USB connection

"The Printer Cannot Connect by USB (Windows)" on page 147

❏ The printer is recognized, but printing cannot be performed.

"Cannot Print Even Though a Connection has been Established (Windows)" on page 148

Cannot connect to a Network

The problem could be one of the following issues.

Something is wrong with the network devices for Wi-Fi connection.

Solutions

Turn off the devices you want to connect to the network. Wait for about 10 seconds, and then turn on the devices in the following order; wireless router, computer or smart device, and then printer. Move the printer and computer or smart device closer to the wireless router to help with radio wave communication, and then try to make network settings again.

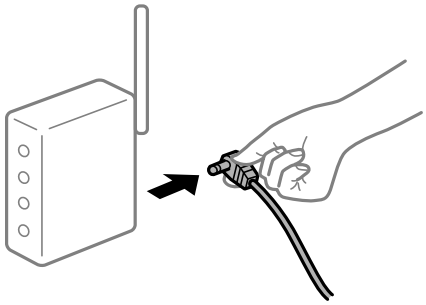

Devices cannot receive signals from the wireless router because they are too far apart.

Solutions

After moving the computer or the smart device and the printer closer to the wireless router, turn off the wireless router, and then turn it back on.

When changing the wireless router, the settings do not match the new router.

Solutions

Make the connection settings again so that they match the new wireless router.

The SSIDs connected from the computer or smart device and computer are different.

Solutions

When you are using multiple wireless routers at the same time or the wireless router has multiple SSIDs and devices are connected to different SSIDs, you cannot connect to the wireless router.

Connect the computer or smart device to the same SSID as the printer.

❏ Example of connecting to different SSIDs

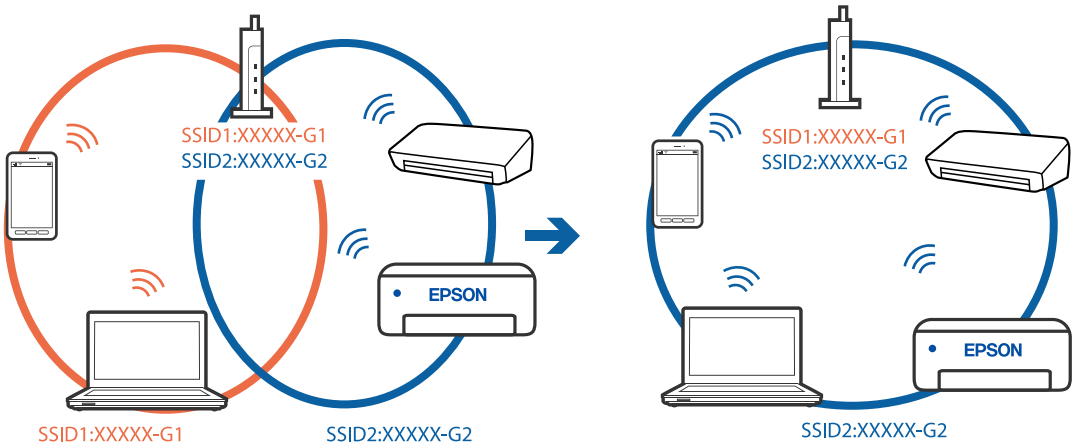

❏ Example of connecting to SSIDs with a different frequency range

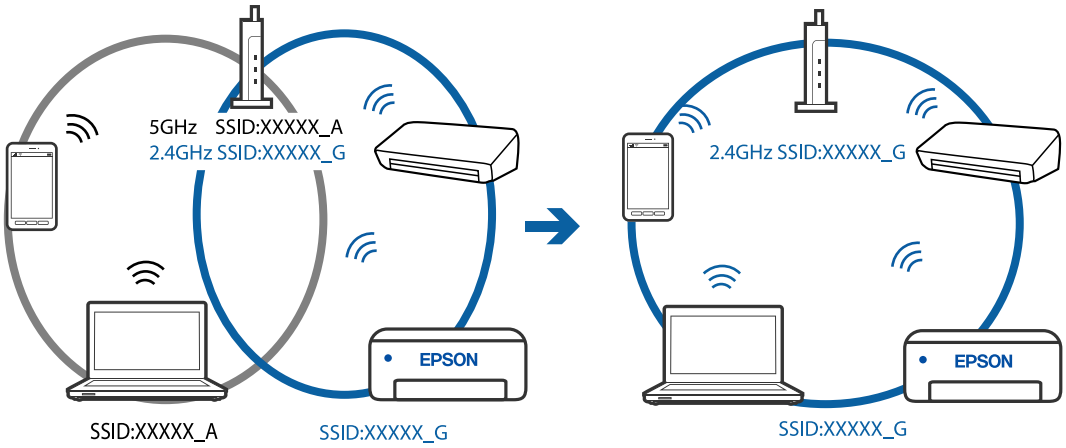

A privacy separator on the wireless router is available.

Solutions

Most wireless routers have a separator function that blocks communication between devices within the same SSID. If you cannot communicate between the printer and the computer or smart device even if they are connected to the same network, disable the separator function on the wireless router. See the manual provided with the wireless router for details.

The IP address is incorrectly assigned.

Solutions

If the IP address assigned to the printer is 169.254.XXX.XXX, and the subnet mask is 255.255.0.0, the IP address may not be assigned correctly.

Print the network connection report, and then check the IP address and the subnet mask assigned to the printer. To print a network connection report, select **Settings** > **Network Settings** > **Connection Check**.

Restart the wireless router or reset the network settings for the printer.

There is a problem with the network settings on the computer.

Solutions

Try accessing any website from your computer to make sure that your computer's network settings are correct. If you cannot access any website, there is a problem on the computer.

Check the network connection of the computer. See the documentation provided with the computer for details.

The printer has been connected by Ethernet using devices that support IEEE802.3az (Energy Efficient Ethernet).

Solutions

When you connect the printer by Ethernet using devices that support IEEE802.3az (Energy Efficient Ethernet), the following problems may occur depending on the hub or router that you are using.

❏ Connection becomes unstable, the printer is connected and disconnected again and again.

❏ Cannot connect to the printer.

❏ The communication speed becomes slow.

Follow the steps below to disable IEEE802.3az for the printer and then connect.

1. Remove the Ethernet cable connected to the computer and the printer.
2. When IEEE802.3az for the computer is enabled, disable it.
   See the documentation provided with the computer for details.
3. Connect the computer and the printer with an Ethernet cable directly.
4. On the printer, print a network connection report.
   "Printing a Network Connection Report" on page 236
5. Check the printer's IP address on the network connection report.
6. On the computer, access Web Config.
   Launch a Web browser, and then enter the printer's IP address.
   "Running Web Config on a Web Browser" on page 255
7. Select **Advanced Settings** from the list at the top right of the window.
8. Select **Network Settings** > **Wired LAN**.
9. Select **OFF** for **IEEE 802.3az**.
10. Click **Next**.
11. Click **OK**.
12. Remove the Ethernet cable connected to the computer and the printer.
13. If you disabled IEEE802.3az for the computer in step 2, enable it.
14. Connect the Ethernet cables that you removed in step 1 to the computer and the printer.

If the problem still occurs, devices other than the printer may be causing the problem.

The Printer Cannot Connect by USB (Windows)

The following causes can be considered.

The USB cable is not plugged into the electrical outlet correctly.

Solutions

Connect the USB cable securely to the printer and the computer.

There is a problem with the USB hub.

Solutions

If you are using a USB hub, try to connect the printer directly to the computer.

There is a problem with the USB cable or the USB inlet.

Solutions

If the USB cable cannot be recognized, change the port, or change the USB cable.

Cannot Send or Receive Faxes Even Though a Connection has been Correctly Established (Windows)

The following causes can be considered.

The software is not installed.

Solutions

Make sure that the PC-FAX driver have been installed on the computer. The PC-FAX driver is installed with FAX Utility. Follow the steps below to check if it is installed.

Make sure the printer (fax) is displayed in **Devices and Printers**, **Printer**, or **Printers and Other Hardware**. The printer (fax) is displayed as "EPSON XXXXX (FAX)". If the printer (fax) is not displayed, uninstall and then re-install the FAX Utility. See the following to access **Devices and Printers**, **Printer**, or **Printers and Other Hardware**.

- Windows 10

  Click on the start button, and then select **Windows System** > **Control Panel** > **View devices and printers** in **Hardware and Sound**.

- Windows 8.1/Windows 8

  Select **Desktop** > **Settings** > **Control Panel** > **View devices and printers** in **Hardware and Sound** or **Hardware**.

- Windows 7

  Click the start button, and select **Control Panel** > **View devices and printers** in **Hardware and Sound** or **Hardware**.

- Windows Vista

  Click the start button, and select **Control Panel** > **Printers** in **Hardware and Sound**.

- Windows XP

  Click the start button, and select **Settings** > **Control Panel** > **Printers and Other Hardware** > **Printers and Faxes**.

User authentication failed when a fax is sent from a computer.

Solutions

Set the user name and password in the printer driver. When sending a fax from a computer when the security function that restrict users from using the printer's fax function is set, user authentication is performed with the user name and password set in the printer driver.

There are some problems with fax connection and fax settings.

Solutions

Try the resolutions for fax connection and fax settings.

Cannot Send and Receive Faxes (Mac OS)

Make sure the computer and the printer are connected correctly. The cause and solution to the problem differ depending on whether or not they are connected.

Checking the Connection Status

Use EPSON Status Monitor to check the connection status for the computer and the printer.

1. Select **System Preferences** from the Apple menu > **Printers & Scanners** (or **Print & Scan**, **Print & Fax**), and then select the printer.
2. Click **Options & Supplies** > **Utility** > **Open Printer Utility**.
3. Click **EPSON Status Monitor**.

When the remaining ink levels are displayed, a connection has been successfully established between the computer and the printer.

Check the following if a connection has not been established.

❏ The printer is not recognized over a network connection

"Cannot connect to a Network" on page 152

❏ The printer is not recognized using a USB connection

"The Printer Cannot Connect by USB (Mac OS)" on page 155

Check the following if a connection has been established.

❏ The printer is recognized, but printing cannot be performed.

"Cannot Print Even Though a Connection has been Established (Mac OS)" on page 156

Cannot connect to a Network

The problem could be one of the following issues.

Something is wrong with the network devices for Wi-Fi connection.

Solutions

Turn off the devices you want to connect to the network. Wait for about 10 seconds, and then turn on the devices in the following order; wireless router, computer or smart device, and then printer. Move the printer and computer or smart device closer to the wireless router to help with radio wave communication, and then try to make network settings again.

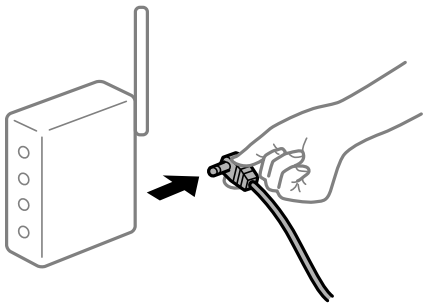

Devices cannot receive signals from the wireless router because they are too far apart.

Solutions

After moving the computer or the smart device and the printer closer to the wireless router, turn off the wireless router, and then turn it back on.

When changing the wireless router, the settings do not match the new router.

Solutions

Make the connection settings again so that they match the new wireless router.

The SSIDs connected from the computer or smart device and computer are different.

Solutions

When you are using multiple wireless routers at the same time or the wireless router has multiple SSIDs and devices are connected to different SSIDs, you cannot connect to the wireless router.

Connect the computer or smart device to the same SSID as the printer.

❏ Example of connecting to different SSIDs

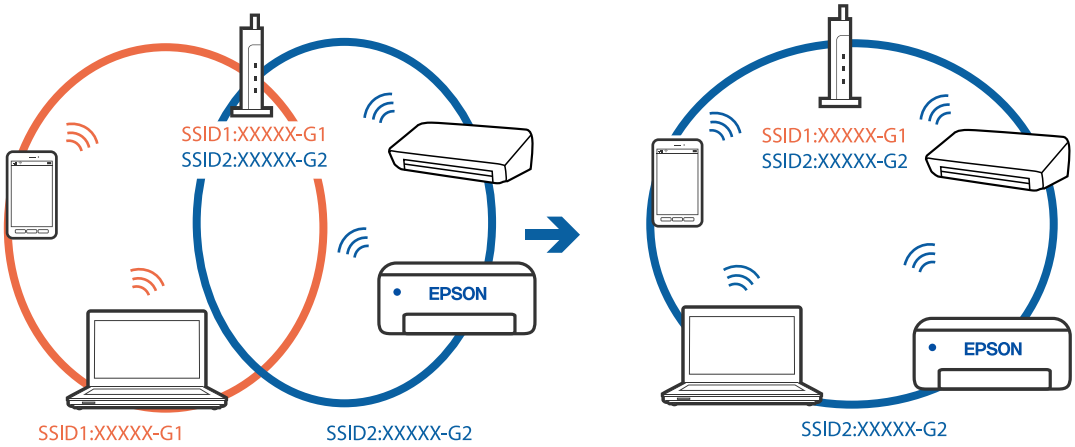

❏ Example of connecting to SSIDs with a different frequency range

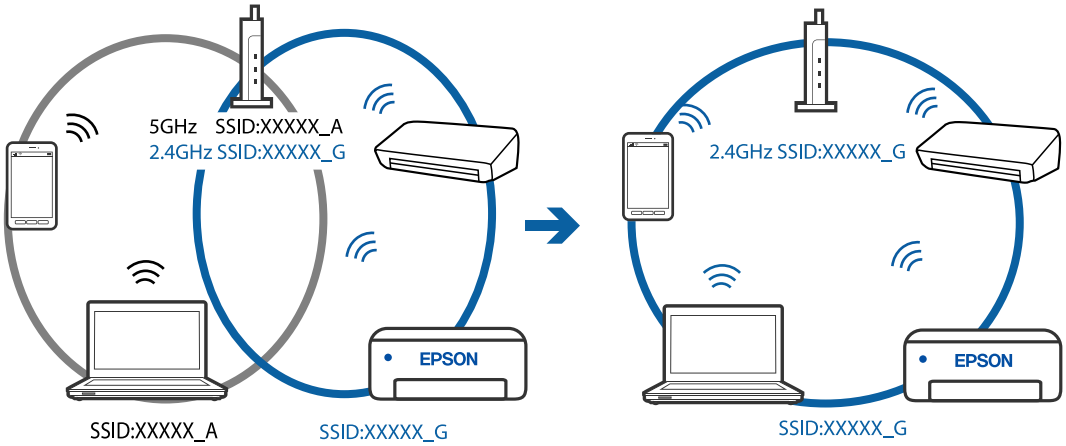

A privacy separator on the wireless router is available.

Solutions

Most wireless routers have a separator function that blocks communication between devices within the same SSID. If you cannot communicate between the printer and the computer or smart device even if they are connected to the same network, disable the separator function on the wireless router. See the manual provided with the wireless router for details.

The IP address is incorrectly assigned.

Solutions

If the IP address assigned to the printer is 169.254.XXX.XXX, and the subnet mask is 255.255.0.0, the IP address may not be assigned correctly.

Print the network connection report, and then check the IP address and the subnet mask assigned to the printer. To print a network connection report, select **Settings** > **Network Settings** > **Connection Check**.

Restart the wireless router or reset the network settings for the printer.

There is a problem with the network settings on the computer.

Solutions

Try accessing any website from your computer to make sure that your computer's network settings are correct. If you cannot access any website, there is a problem on the computer.

Check the network connection of the computer. See the documentation provided with the computer for details.

The printer has been connected by Ethernet using devices that support IEEE802.3az (Energy Efficient Ethernet).

Solutions

When you connect the printer by Ethernet using devices that support IEEE802.3az (Energy Efficient Ethernet), the following problems may occur depending on the hub or router that you are using.

- ❏ Connection becomes unstable, the printer is connected and disconnected again and again.
- ❏ Cannot connect to the printer.
- ❏ The communication speed becomes slow.

Follow the steps below to disable IEEE802.3az for the printer and then connect.

1. Remove the Ethernet cable connected to the computer and the printer.
2. When IEEE802.3az for the computer is enabled, disable it.

   See the documentation provided with the computer for details.
3. Connect the computer and the printer with an Ethernet cable directly.
4. On the printer, print a network connection report.

   "Printing a Network Connection Report" on page 236
5. Check the printer's IP address on the network connection report.

6. On the computer, access Web Config.

   Launch a Web browser, and then enter the printer's IP address.

   "Running Web Config on a Web Browser" on page 255

7. Select **Advanced Settings** from the list at the top right of the window.
8. Select **Network Settings** > **Wired LAN**.
9. Select **OFF** for **IEEE 802.3az**.
10. Click **Next**.
11. Click **OK**.
12. Remove the Ethernet cable connected to the computer and the printer.
13. If you disabled IEEE802.3az for the computer in step 2, enable it.
14. Connect the Ethernet cables that you removed in step 1 to the computer and the printer.

If the problem still occurs, devices other than the printer may be causing the problem.

The Printer Cannot Connect by USB (Mac OS)

The following causes can be considered.

The USB cable is not plugged into the electrical outlet correctly.

Solutions

Connect the USB cable securely to the printer and the computer.

There is a problem with the USB hub.

Solutions

If you are using a USB hub, try to connect the printer directly to the computer.

There is a problem with the USB cable or the USB inlet.

Solutions

If the USB cable cannot be recognized, change the port, or change the USB cable.

Cannot Send or Receive Even Though a Connection has been Correctly Established (Mac OS)

The following causes can be considered.

The software is not installed.

Solutions

Make sure that the PC-FAX driver have been installed on the computer. The PC-FAX driver is installed with FAX Utility. Follow the steps below to check if it is installed.

Select **System Preferences** from the Apple menu > **Printers & Scanners** (or **Print & Scan**, **Print & Fax**), and then make sure the printer (fax) is displayed. The printer (fax) is displayed as "FAX XXXX (USB)" or "FAX XXXX (IP)". If the printer (fax) is not displayed, click [+] and then register the printer (fax).

PC-FAX driver is paused.

Solutions

Select **System Preferences** from the Apple menu > **Printers & Scanners** (or **Print & Scan**, **Print & Fax**), and then double-click the printer (fax). If the printer is paused, click **Resume** (or **Resume Printer**).

User authentication failed when a fax is sent from a computer.

Solutions

Set the user name and password in the printer driver. When sending a fax from a computer when the security function that restrict users from using the printer's fax function is set, user authentication is performed with the user name and password set in the printer driver.

There are some problems with fax connection and fax settings.

Solutions

Try the resolutions for fax connection and fax settings.

Cannot Operate the Printer as Expected

Operations are Slow

Printing Is Too Slow

The following causes can be considered.

Unnecessary applications are running.

Solutions

Close any unnecessary applications on your computer or smart device.

The print quality is set to high.

Solutions

Lower the quality setting.

Bidirectional printing is disabled.

Solutions

Enable the bidirectional (or high speed) setting. When this setting is enabled, the print head prints while moving in both directions, and the printing speed increases.

❏ Windows

Select **Bidirectional Printing** on the printer driver's **More Options** tab.

❏ Mac OS

Select **System Preferences** from the Apple menu > **Printers & Scanners** (or **Print & Scan**, **Print & Fax**), and then select the printer. Click **Options & Supplies** > **Options** (or **Driver**). Select On as the **Bidirectional Printing** setting.

Quiet Mode is enabled.

Solutions

Disable **Quiet Mode**. The printing speed slows down when the printer is running in **Quiet Mode**.

❏ Control panel

Select on the home screen, and then select **Off**.

❏ Windows

Select **Off** as the **Quiet Mode** setting on the printer driver's **Main** tab.

❏ Mac OS

Select **System Preferences** from the Apple menu > **Printers & Scanners** (or **Print & Scan**, **Print & Fax**), and then select the printer. Click **Options & Supplies** > **Options** (or **Driver**). Select Off as the **Quiet Mode** setting.

Printing Slows Down Dramatically During Continuous Printing

The function that prevents the printer mechanism from overheating and being damaged is operating.

Solutions

You can continue printing. To return to normal printing speed, leave the printer idle for at least 30 minutes. Printing speed does not return to normal if the power is off.

Scanning Speed Is Slow

Scanning at a high resolution.

Solutions

Try scanning at a lower resolution.

LCD Screen Gets Dark

The printer is in sleep mode.

Solutions

Press any button on the control panel to return the LCD screen to its former state.

Operation Sounds Are Loud

Quiet Mode is disabled.

Solutions

If operations sounds are too loud, enable **Quiet Mode**. Enabling this feature may reduce printing speed.

- Control panel

  Select on the home screen, and then enable **Quiet Mode**.

- Windows printer driver

  Enable **Quiet Mode** on the **Main** tab.

- Mac OS printer driver

  Select **System Preferences** from the Apple menu > **Printers & Scanners** (or **Print & Scan**, **Print & Fax**), and then select the printer. Click **Options & Supplies** > **Options** (or **Driver**). Select **On** as the **Quiet Mode** setting.

The Date and Time Are Incorrect

Error occurred in power supply.

Solutions

After a power failure caused by a lightning strike or if the power is left off for a long time, the clock may show the wrong time. Set the date and the time correctly in **Settings** > **Printer Setup** > **Date/Time Settings** on the control panel.

The Root Certificate Needs to be Updated

The root certificate has expired.

Solutions

Run Web Config, and then update the root certificate.

Sender's Fax Number Not Displayed

The sender's fax number is not set to the sender's machine.

Solutions

The sender may not have set the fax number. Contact the sender.

Sender's Fax Number Displayed on Received Faxes is Wrong

The sender's fax number set to the sender's machine is wrong.

Solutions

The sender may have set the fax number incorrectly. Contact the sender.

Cannot Make Calls on the Connected Telephone

The phone cable is not connected correctly.

Solutions

Connect the telephone to the EXT. port on the printer, and pick up the receiver. If you cannot hear a dial tone through the receiver, connect the phone cable correctly.

Answering Machine Cannot Answer Voice Calls

The printer's Rings to Answer setting is set to less than the number of rings for your answering machine.

Solutions

Select **Slow(9,600bps)** in **Settings** > **Fax Settings** > **Basic Settings** > **Rings to Answer**, and then set to a number higher than the number of rings for your answering machine.

A Lot of Junk Faxes Have Been Received

The printer's feature to block junk faxes has not been set up.

Solutions

Make **Rejection Fax** settings in **Settings** > **Fax Settings** > **Basic Settings**.

"Making Settings for Blocking Junk Faxes" on page 95

A Message Prompting You to Reset the Ink Level is Displayed Even After Refilling the Ink

Ink level was not reset.

Solutions

After refilling the ink, follow the on-screen instructions to reset the ink level.

The Ink Level Display does not Change Even After Refilling the Ink

Ink level was not reset.

Solutions

After refilling the ink, follow the on-screen instructions to reset the ink level.

An Error Code is Displayed on the LCD Screen

A code is displayed on the LCD screen if there is an error or information that requires your attention. If a code is displayed, follow the solutions below to solve the problem.

Code	Situation	Solutions
E-01	A printer error has occurred.	Open the inner cover and the scanner unit, and then remove any paper or protective material inside the printer. Turn the power off and on again.
E-02	A scanner error has occurred.	Turn the power off and on again.
E-11	An ink pad needs to be replaced.	Contact Epson or an authorised Epson service provider to replace the ink pad*1. It is not a user-serviceable part. However, non-printing features such as scanning are available.
E-12	A borderless printing ink pad needs to be replaced.	Contact Epson or an authorised Epson service provider to replace the borderless printing ink pad*2. It is not a user-serviceable part. Borderless printing is not available, but printing with a border is available.
W-01	A paper jam has occurred.	Remove the paper from the printer and press the button displayed on the bottom of the LCD screen to clear the error. In some cases, you need to turn the power off and on again.
W-11	An ink pad is nearing the end of its service life.	Contact Epson or an authorised Epson service provider to replace the ink pad*1. It is not a user-serviceable part. The message will be displayed until the ink pad is replaced. Press the ⊡ button to resume printing.
W-14	A borderless printing ink pad is nearing the end of its service life.	Contact Epson or an authorised Epson service provider to replace the borderless printing ink pad*2. It is not a user-serviceable part. The message will be displayed until the ink pad is replaced. Press the ⊡ button to resume printing.
I-22	Set Wi-Fi from the **Push Button (WPS)**.	Push the access point button. If there is no button on the access point, open the access point setting window, and then click the button displayed in the software.
I-23	Set Wi-Fi from the **PIN Code (WPS)**.	Enter the PIN code displayed on the LCD screen into the access point or computer within two minutes.
I-31	Set Wi-Fi from the **Wi-Fi Auto Connect**.	Install the software on your computer, and then press the OK button when Wi-Fi setup starts.
I-41	**Paper Setup Auto Display** is disabled. Some functions cannot be used.	If **Paper Setup Auto Display** is disabled, you cannot use AirPrint. To use AirPrint, enable **Paper Setup Auto Display**.
I-60	Your computer may not support WSD (Web Services for Devices).	The scan to computer (WSD) feature is only available for computers running English versions of Windows 10, Windows 8.1, Windows 8, Windows 7 or Windows Vista. Make sure that the printer is correctly connected to the computer.
Recovery Mode	The printer has started in recovery mode because the firmware update failed.	Follow the steps below to try to update the firmware again. 1. Connect the computer and the printer with a USB cable. (During recovery mode, you cannot update the firmware over a network connection.) 2. Visit your local Epson website for further instructions.

*1 In some print cycles a very small amount of surplus ink may be collected in the ink pad. To prevent ink leakage from the pad, the printer is designed to stop printing when the pad has reached its limit. Whether and how often this is required will vary according to the number of pages you print, the type of material that you print and the number of cleaning cycles that the printer performs. The need for replacement of the pad does not mean that your printer has ceased to operate in accordance with its specifications. The printer will advise you when the pad requires replacing and this can only be performed by an authorised Epson Service provider. The Epson warranty does not cover the cost of this replacement.

*2 In some print cycles a very small amount of surplus ink may be collected in the borderless printing ink pad. To prevent ink leakage from the pad, the product is designed to stop borderless printing when the pad has reached its limit. Whether and how often this is required will vary according to the number of pages you print using the borderless print option. The need for replacement of the pad does not mean that your printer has ceased to operate in accordance with its specifications. The printer will advise you when the pad requires replacing and this can only be performed by an authorised Epson Service provider. The Epson warranty does not cover the cost of this replacement.

Paper Gets Jammed

Check the error displayed on the control panel and follow the instructions to remove the jammed paper including any torn pieces. Next, clear the error.

Important:

- *Remove the jammed paper carefully. Removing the paper vigorously may cause damage to the printer.*
- *When removing jammed paper, avoid tilting the printer, placing it vertically, or turning it upside down; otherwise ink may leak.*

Removing Jammed Paper

Caution:

Never touch the buttons on the control panel while your hand is inside the printer. If the printer starts operating, it could cause an injury. Be careful not to touch the protruding parts to avoid injury.

1. Remove the jammed paper.

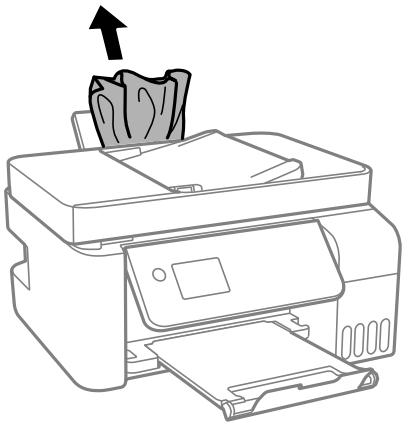

2. Raise the control panel.

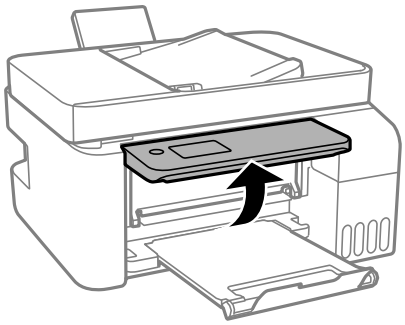

3. Open the inner cover.

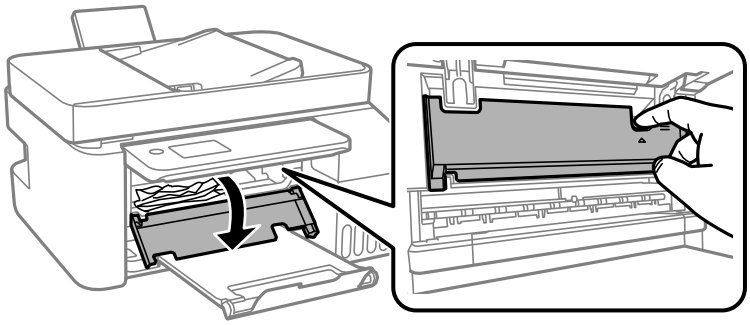

4. Open the scanner unit until it clicks.

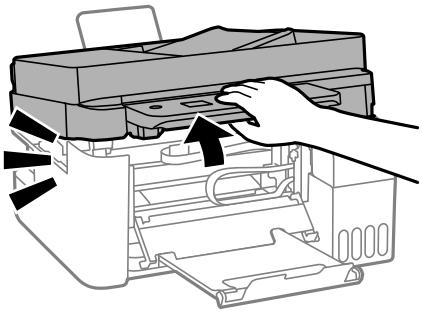

> ***Caution:***
>
> *Be careful not to trap your hand or fingers when opening or closing the scanner unit. Otherwise you may be injured.*

Important:

Do not touch the parts shown in the illustration inside the printer. Doing so may cause a malfunction.

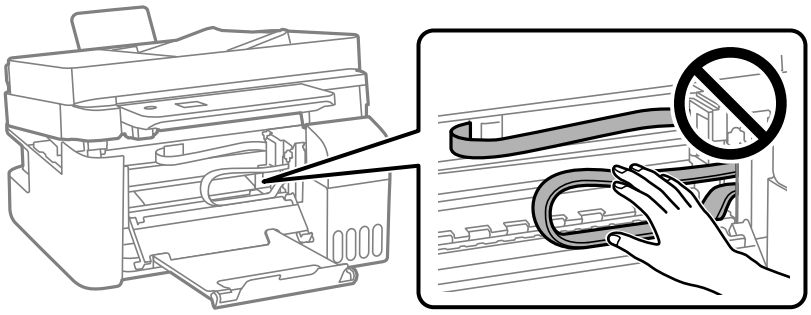

5. Remove the jammed paper.

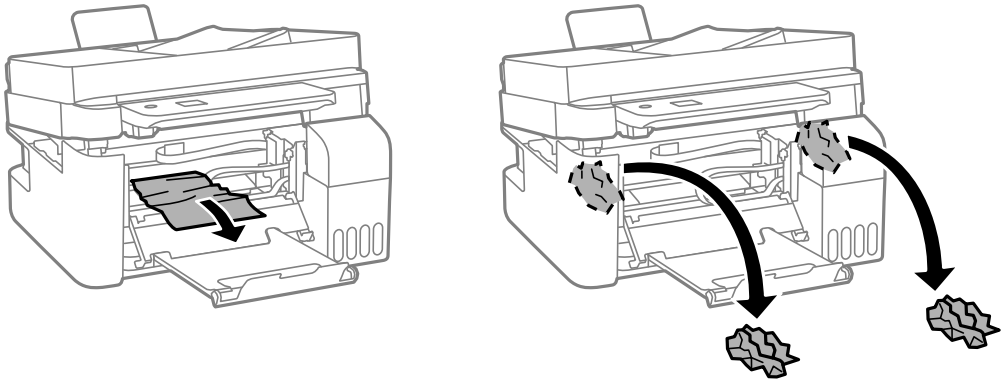

Important:

Do not touch the parts shown in the illustration inside the printer. Doing so may cause a malfunction.

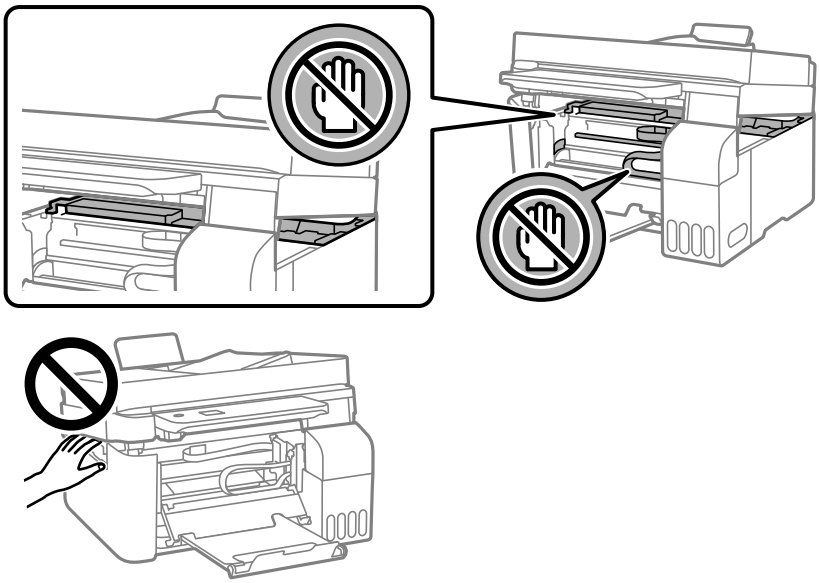

6. Close the scanner unit.

   For safety, the scanner unit is closed in two steps.

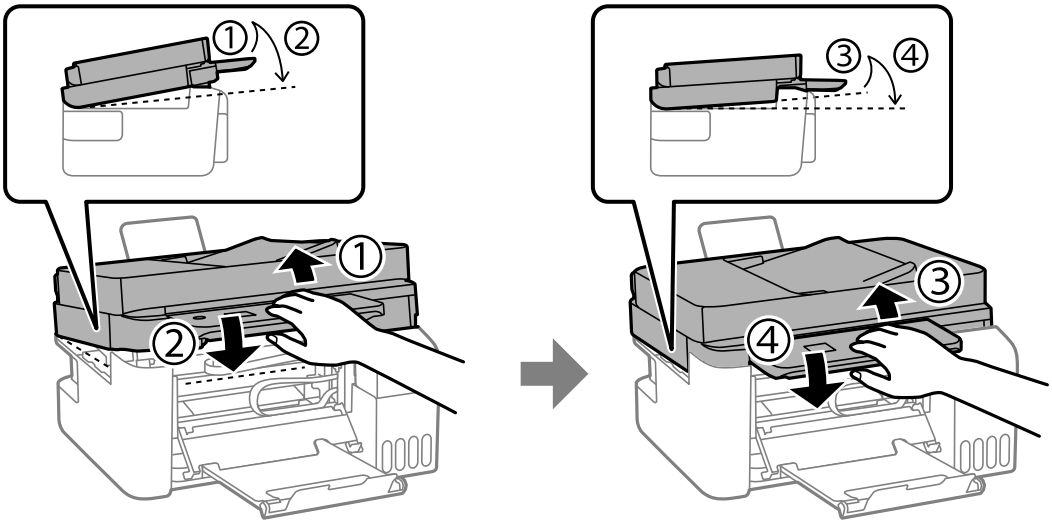

Note:
The scanner unit must be closed completely before it can be opened again.

7. Close the inner cover.

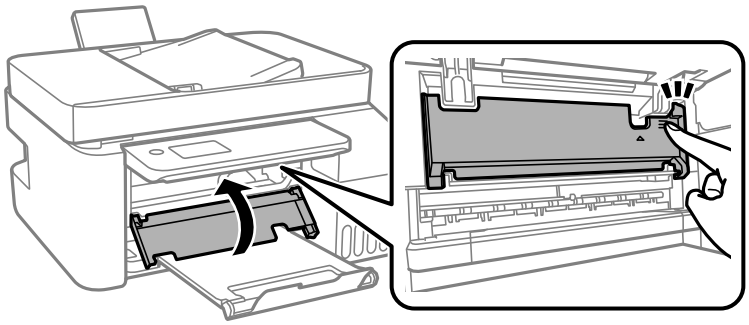

8. Close the control panel.

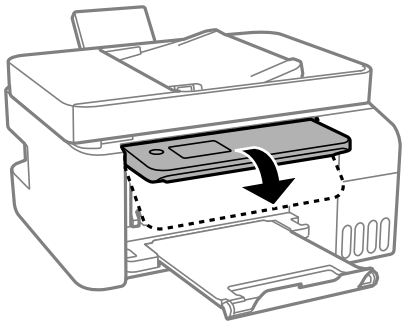

Removing Jammed Paper from the ADF

1. Open the ADF cover.

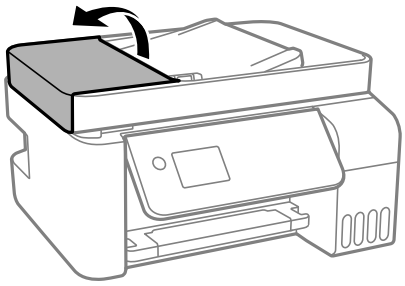

2. Remove the jammed paper.

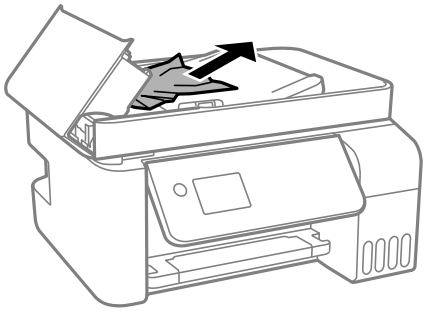

3. Raise the ADF input tray.

> ***Important:***
>
> *Make sure that you open the ADF cover before raising the ADF input tray. Otherwise, the ADF may be damaged.*

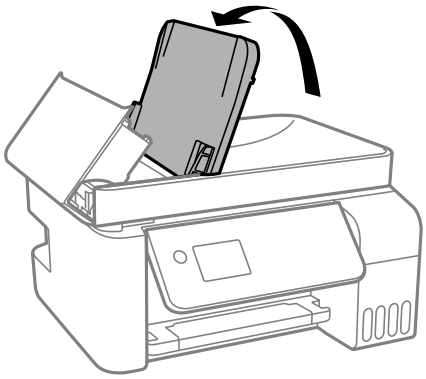

4. Remove the jammed paper.

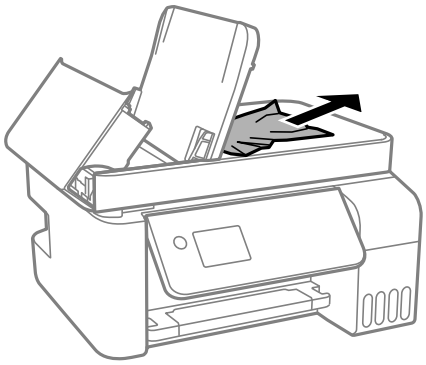

5. Close the ADF cover until it clicks.

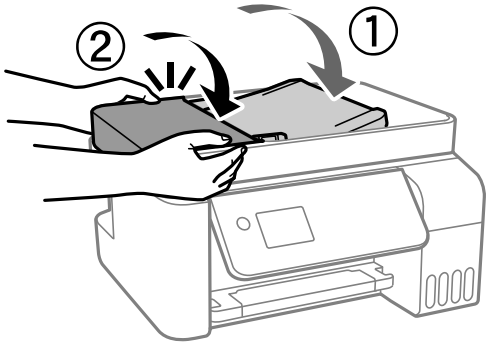

Preventing Paper Jams

Check the following if paper jams occur frequently.

- ❏ Place the printer on a flat surface and operate in the recommended environmental conditions.
  "Environmental Specifications" on page 275
- ❏ Use the paper supported by this printer.
  "Available Paper and Capacities" on page 245
- ❏ Follow paper handling precautions.
  "Paper Handling Precautions" on page 29
- ❏ Load paper in the correct direction, and slide the edge guide against the edge of the paper.
  "Loading Paper in the Rear Paper Feeder" on page 31
- ❏ Do not load more than the maximum number of sheets specified for paper.
- ❏ Load one sheet of paper at a time if you have loaded several sheets of paper.
- ❏ Make sure the paper size and paper type settings match the actual paper size and paper type loaded in the printer.
  "List of Paper Type" on page 30

It is Time to Refill the Ink

Ink Bottle Handling Precautions

Read the following instructions before refilling ink.

Storing precautions for ink

- ❏ Keep the ink bottles out of direct sunlight.
- ❏ Do not store the ink bottles in high or freezing temperatures.
- ❏ Epson recommends using the ink bottle before the date printed on the package.
- ❏ When storing or transporting an ink bottle, do not tilt the bottle and do not subject it to impacts or temperature changes. Otherwise, ink may leak even if the cap on the ink bottle is tightened securely. Be sure to keep the ink bottle upright when tightening the cap, and take precautions to prevent ink from leaking when transporting the bottle, for example, putting the bottle in a bag.
- ❏ After bringing an ink bottle inside from a cold storage site, allow it to warm up at room temperature for at least three hours before using it.
- ❏ Do not open the ink bottle package until you are ready to fill the ink tank. The ink bottle is vacuum packed to maintain its reliability. If you leave an ink bottle unpacked for a long time before using it, normal printing may not be possible.
- ❏ Once you open an ink bottle, we recommend using it as soon as possible.

Handling precautions for refilling ink

- ❏ To ensure you receive premium print quality and to help protect your print head, a variable ink safety reserve remains in the ink tank when your printer indicates to refill ink. The yields quoted for you do not include this reserve.
- ❏ For optimum print results do not maintain low ink levels for extended periods of time.
- ❏ Use ink bottles with the correct part code for this printer.
- ❏ The ink for this printer must be handled carefully. Ink may splatter when the ink tanks are being filled or refilled with ink. If ink gets on your clothes or belongings, it may not come off.
- ❏ Do not shake too vigorously or squeeze the ink bottles.
- ❏ Prolonged use of the printer when the ink level is below the lower line could damage the printer. Fill the ink tank to the upper line while the printer is not operating. To display the correct ink level estimates, reset the ink level after filling the tank.

Ink consumption

- ❏ To maintain optimum print head performance, some ink is consumed from all ink tanks during maintenance operations such as print head cleaning. Ink may also be consumed when you turn the printer on.
- ❏ When printing in monochrome or grayscale, color inks instead of black ink may be used depending on the paper type or print quality settings. This is because a mixture of color inks is used to create black.
- ❏ The ink in the ink bottles supplied with your printer is partly used during initial setup. In order to produce high quality printouts, the print head in your printer will be fully charged with ink. This one-off process consumes a quantity of ink and therefore these bottles may print fewer pages compared to subsequent ink bottles.
- ❏ Quoted yields may vary depending on the images that you are printing, the paper type that you are using, the frequency of your prints and environmental conditions such as temperature.

❏ Visually check ink levels in the actual ink tanks. Prolonged use of the printer when the ink is expended could damage the printer. Epson recommends filling the ink tank to the upper line when the printer is not operating to reset the ink level.

Refilling the Ink Tanks

1. Select **Maintenance** on the home screen.

   To select an item, use the ▲ ▼ ◀ ▶ buttons, and then press the OK button.

2. Select **Fill Ink**.

3. Press the ▼ button to read all the safety and usage precautions for filling ink, and then press the OK button to continue.

4. Open the ink tank cover.

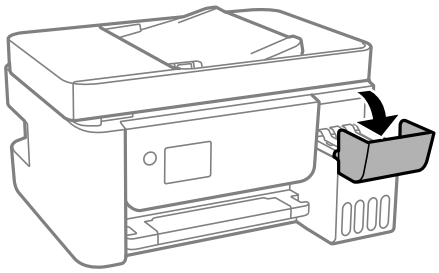

5. Open the ink tank cap.

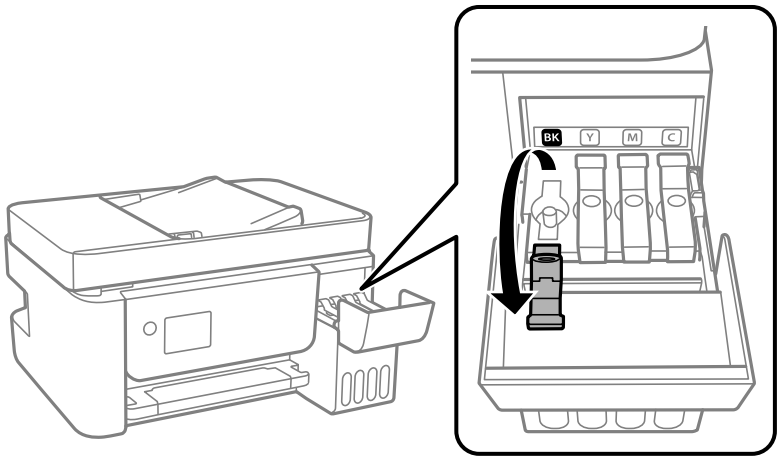

> ***Important:***
> *Make sure that the color of the ink tank matches the ink color that you want to refill.*

6. While holding the ink bottle upright, turn the cap slowly to remove it.

> ***Important:***
> - *Epson recommends the use of genuine Epson ink bottles.*
> - *Be careful not to spill any ink.*

7. Check the upper line (a) in the ink tank.

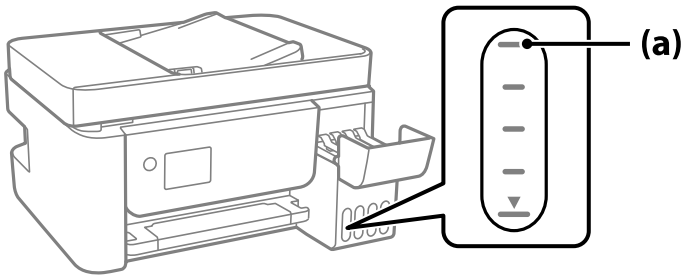

8. Align the top of the ink bottle with the filling port, and then insert it straight into the port to fill ink until it stops automatically at the upper line.

   When you insert the ink bottle into the filling port for the correct color, ink starts pouring and the flow stops automatically when the ink reaches the upper line.

If the ink does not start flowing into the tank, remove the ink bottle and reinsert it. However, do not remove and reinsert the ink bottle when the ink has reached the upper line; otherwise ink may leak.

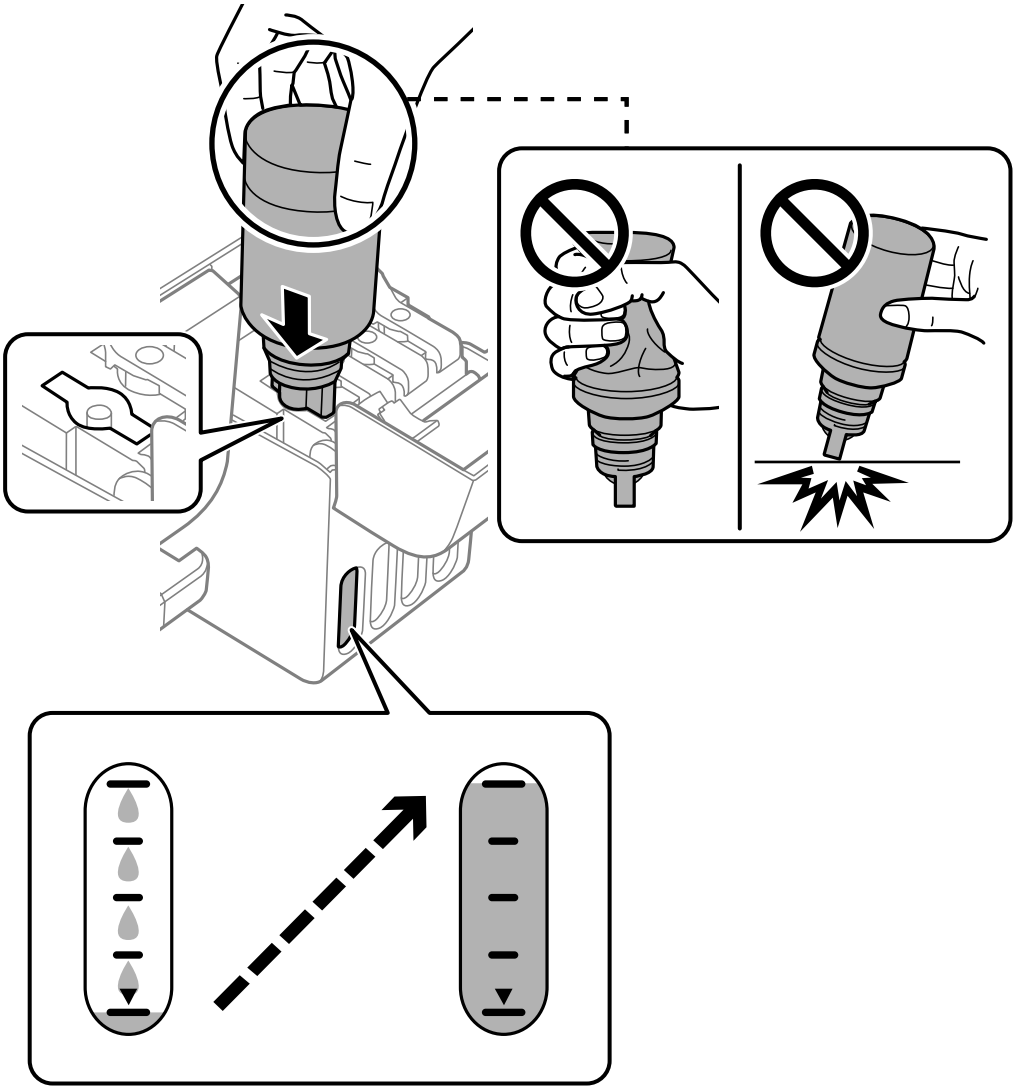

9. When you have finished filling the ink, remove the ink bottle.

> ***Important:***
> *Do not leave the ink bottle inserted; otherwise the bottle may be damaged or ink may leak.*

Note:
If any ink remains in the ink bottle, tighten the cap and store the bottle upright for later use.

10. Close the ink tank cap securely.

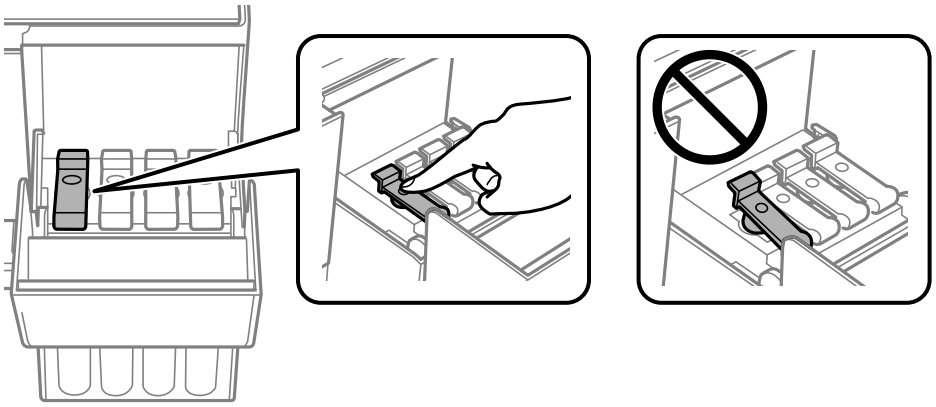

11. Close the ink tank cover firmly.

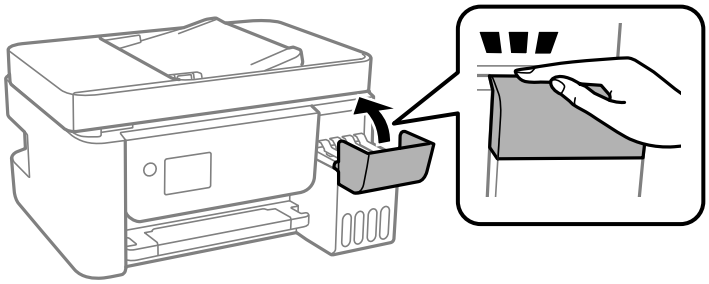

12. Press the ⓘ button, and then follow the on-screen instructions to set the ink level.

> ***Important:***
> *Even if you do not refill ink up to the upper line on the ink tank, you can continue using the printer. To keep your printer operating at its best, however, fill ink tank up to the upper line and reset the ink level immediately.*

Related Information

➡ "Ink Bottle Codes" on page 248
➡ "Ink Bottle Handling Precautions" on page 196
➡ "Cleaning Spilled ink" on page 128

Notes on Resetting the Ink Level

Be sure to reset the ink level after refilling the ink.

If you refilled two or more colors, you need to select all of the colors that you refilled and reset the ink level.

Unless you reset the ink level, the ink level displayed does not change even after refilling the ink.

Printing, Copying, Scanning, and Faxing Quality is Poor

Print Quality is Poor

Color Missing, Banding, or Unexpected Colors Appear in Printout

The print head nozzles may be clogged.

Solutions

- ❑ Perform a nozzle check to see if the print head nozzles are clogged. Perform a nozzle check, and then clean the print head if any of the print head nozzles are clogged. If you have not used the printer for a long time, the print head nozzles may be clogged and ink drops may not be discharged.
- ❑ If you printed when the ink levels were too low to be seen in the ink tank windows, refill the ink tanks to the upper lines and then use the **Power Cleaning** utility to replace the ink inside the ink tubes. After you use the utility, perform a nozzle check to see if print quality has improved.

➡ "Checking and Cleaning the Print Head" on page 120
➡ "Running Power Cleaning" on page 122

Print Quality is Poor with Black Ink

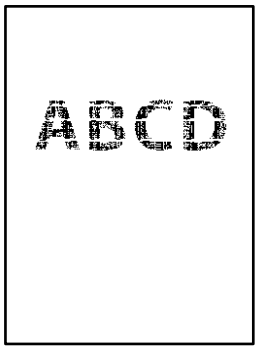

The print head nozzles may be clogged.

Solutions

- Perform a nozzle check to see if the print head nozzles are clogged. Perform a nozzle check, and then clean the print head if any of the print head nozzles are clogged. If you have not used the printer for a long time, the print head nozzles may be clogged and ink drops may not be discharged.

  "Checking and Cleaning the Print Head" on page 120

- If you cannot solve the problem using head cleaning, you can print immediately with a mixture of color inks to create composite black by changing the following settings in Windows.

  Click **Extended Settings** on the printer driver's **Maintenance** tab. If you select **Use a Mixture of Color Inks to Create Black**, you can print at **Standard** print quality when the **Paper Type** is **Plain paper** or **Envelope**.

  Note that this feature cannot solve nozzle clogging. To solve nozzle clogging, we recommend contacting Epson support for repairs.

Colored Banding Appears at Intervals of Approximately 2.5 cm

The following causes can be considered.

The paper type setting does not match the paper loaded.

Solutions

Select the appropriate paper type setting for the type of paper loaded in the printer.

➡ "List of Paper Type" on page 30

The print quality is set to low.

Solutions

When printing on plain paper, print using a higher quality setting.

❏ Windows

Select **High** from **Quality** on the printer driver's **Main** tab.

❏ Mac OS

Select **Fine** as **Print Quality** from the print dialog's **Print Settings** menu.

The print head position is out of alignment.

Solutions

Select the **Maintenance** > **Print Head Alignment** > **Horizontal Alignment** menu on the control panel to align the print head.

Blurry Prints, Vertical Banding, or Misalignment

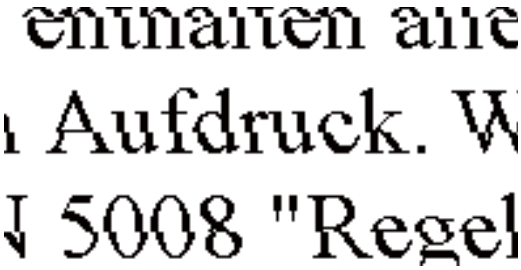

The following causes can be considered.

The print head position is out of alignment.

Solutions

Select the **Maintenance** > **Print Head Alignment** > **Vertical Alignment** menu on the control panel to align the print head.

The bidirectional printing setting is enabled.

Solutions

If print quality does not improve even after aligning the print head, disable the bidirectional setting.

During bidirectional (or high speed) printing, the print head prints while moving in both directions, and vertical lines may be misaligned. Disabling this setting may slow down printing speed but improve print quality.

❏ Windows

Clear **Bidirectional Printing** on the printer driver's **More Options** tab.

❏ Mac OS

Select **System Preferences** from the Apple menu > **Printers & Scanners** (or **Print & Scan**, **Print & Fax**), and then select the printer. Click **Options & Supplies** > **Options** (or **Driver**). Select **Off** as the **Bidirectional Printing** setting.

Printout Comes Out as a Blank Sheet

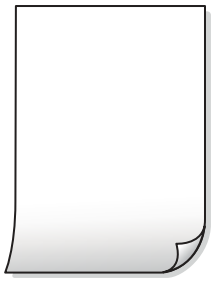

The print head nozzles may be clogged.

Solutions

Perform the nozzle check, and then try Power Cleaning if the print head nozzles are clogged.

➡ "Checking and Cleaning the Print Head" on page 120
➡ "Running Power Cleaning" on page 122

The print settings and the paper size loaded in the printer are different.

Solutions

Change the print settings according to the paper size loaded in the printer. Load paper in the printer that matches the print settings.

Multiple sheets of paper are fed into the printer at the same time.

Solutions

See the following to prevent multiple sheets of paper being fed into the printer at the same time.

➡ "Several Sheets of Paper are Fed at a Time" on page 141

Paper Is Smeared or Scuffed

The following causes can be considered.

Paper is loaded incorrectly.

Solutions

When horizontal banding (perpendicular to the printing direction) appears, or the top or bottom of the paper is smeared, load paper in the correct direction and slide the edge guides to the edges of the paper.

➡ "Loading Paper in the Rear Paper Feeder" on page 31

The paper path is smeared.

Solutions

When vertical banding (horizontal to the printing direction) appears, or the paper is smeared, clean the paper path.

➡ "Cleaning the Paper Path for Ink Smears" on page 124

The paper is curled.

Solutions

Place the paper on a flat surface to check if it is curled. If it is, flatten it.

The print head is rubbing the surface of the paper.

Solutions

When printing on thick paper, the print head is close to the printing surface and the paper may be scuffed. In this case, enable the reduce scuff setting. If you enable this setting, print quality may decline or printing may slow down.

Windows

Click **Extended Settings** on the printer driver's **Maintenance** tab, and then select **Short Grain Paper**.

The back of the paper was printed before the side that had already been printed was dry.

Solutions

When performing manual 2-sided printing, make sure that the ink is completely dry before reloading the paper.

Printed Photos are Sticky

The print was made on the wrong side of the photo paper.

Solutions

Make sure you are printing on the printable side. When printing on the wrong side of the photo paper, you need to clean the paper path.

➡ "Cleaning the Paper Path for Ink Smears" on page 124

Images or Photos are Printed in Unexpected Colors

The following causes can be considered.

The print head nozzles may be clogged.

Solutions

Perform a nozzle check to see if the print head nozzles are clogged. Perform a nozzle check, and then clean the print head if any of the print head nozzles are clogged. If you have not used the printer for a long time, the print head nozzles may be clogged and ink drops may not be discharged.

Color correction has been applied.

Solutions

When printing from the Windows printer driver, the Epson auto photo adjustment setting is applied by default depending on the paper type. Try change the setting.

On the **More Options** tab, select **Custom** in **Color Correction**, and then click **Advanced**. Change the **Scene Correction** setting from **Automatic** to any other option. If changing the setting does not work, use any color correction method other than **PhotoEnhance** in **Color Management**.

➡ "Adjusting the Print Color" on page 56

Cannot Print Without Margins

Borderless is not set in the print settings.

Solutions

Make borderless setting in the print settings. If you select a paper type that does not support borderless printing, you cannot select **Borderless**. Select a paper type that supports borderless printing.

❏ Windows

Select **Borderless** on the printer driver's **Main** tab.

❏ Mac OS

Select a borderless paper size from **Paper Size**.

➡ "Paper for Borderless Printing" on page 246

Edges of the Image are Cropped During Borderless Printing

Because the image is slightly enlarged, the protruding area is cropped.

Solutions

Select a smaller enlargement setting.

❑ Windows

Click **Settings** next to the **Borderless** checkbox on the printer driver's **Main** tab, and then change the settings.

❑ Mac OS

Change the **Expansion** setting from the print dialog's **Print Settings** menu.

The Position, Size, or Margins of the Printout Are Incorrect

The following causes can be considered.

The paper is loaded incorrectly.

Solutions

Load paper in the correct direction, and slide the edge guide against the edge of the paper.

➡ "Loading Paper in the Rear Paper Feeder" on page 31

The size of the paper is set incorrectly.

Solutions

Select the appropriate paper size setting.

The margin setting in the application software is not within the print area.

Solutions

Adjust the margin setting in the application so that it falls within the printable area.

➡ "Printable Area" on page 269

Printed Characters Are Incorrect or Garbled

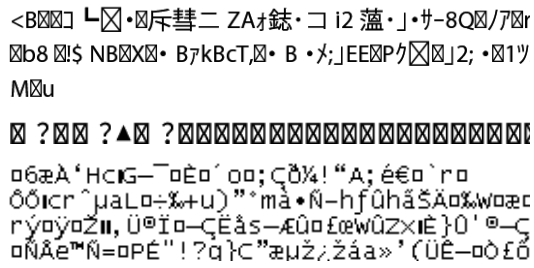

The following causes can be considered.

The USB cable is not connected correctly.

Solutions

Connect the USB cable securely to the printer and the computer.

There is a job waiting to be printed.

Solutions

Cancel any paused print jobs.

The computer has been manually put into the Hibernate mode or the Sleep mode while printing.

Solutions

Do not put the computer manually into the **Hibernate** mode or the **Sleep** mode while printing. Pages of garbled text may be printed next time you start the computer.

You are using the printer driver for a different printer.

Solutions

Make sure that the printer driver you are using is for this printer. Check the printer name on the top of the printer driver window.

The Printed Image Is Inverted

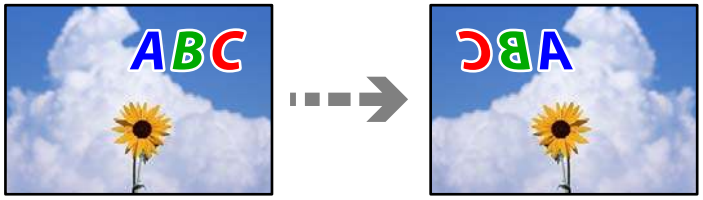

The image is set to invert horizontally in the print settings.

Solutions

Clear any mirror image settings in the printer driver or the application.

❏ Windows

Clear **Mirror Image** on the printer driver's **More Options** tab.

❏ Mac OS

Clear **Mirror Image** from the print dialog's **Print Settings** menu.

Mosaic-Like Patterns in the Prints

Images or photos with a low resolution were printed.

Solutions

When printing images or photos, print using high-resolution data. Images on web sites are often low resolution although they look good enough on the display, and so print quality may decline.

Copy Quality is Poor

Color Missing, Banding, or Unexpected Colors Appear in Copies

The print head nozzles may be clogged.

Solutions

❏ Perform a nozzle check to see if the print head nozzles are clogged. Perform a nozzle check, and then clean the print head if any of the print head nozzles are clogged. If you have not used the printer for a long time, the print head nozzles may be clogged and ink drops may not be discharged.

❏ If you printed when the ink levels were too low to be seen in the ink tank windows, refill the ink tanks to the upper lines and then use the **Power Cleaning** utility to replace the ink inside the ink tubes. After you use the utility, perform a nozzle check to see if print quality has improved.

➡ "Checking and Cleaning the Print Head" on page 120

➡ "Running Power Cleaning" on page 122

You have made a copy in draft mode.

Solutions

Change the print quality setting to something other than draft mode, and then print again.

Note:
For users in Western Europe, the draft mode is not available.

Colored Banding Appears at Intervals of Approximately 2.5 cm

The following causes can be considered.

The paper type setting does not match the paper loaded.

Solutions

Select the appropriate paper type setting for the type of paper loaded in the printer.

➡ "List of Paper Type" on page 30

The print quality is set to low.

Solutions

When printing on plain paper, print using a higher quality setting.

Select **High** in **Quality**.

The print head position is out of alignment.

Solutions

Select the **Maintenance** > **Print Head Alignment** > **Horizontal Alignment** menu on the control panel to align the print head.

Blurry Copies, Vertical Banding, or Misalignment

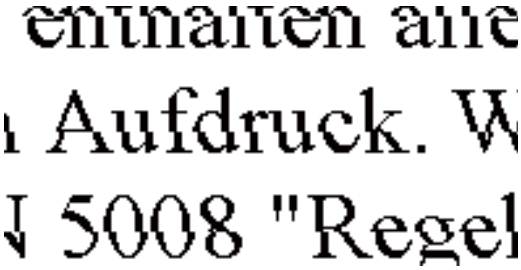

The following causes can be considered.

The print head position is out of alignment.

Solutions

Select the **Maintenance** > **Print Head Alignment** > **Vertical Alignment** menu on the control panel to align the print head.

Printout Comes Out as a Blank Sheet

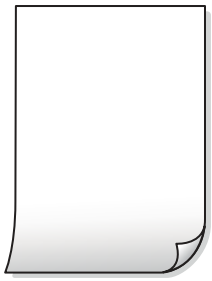

The print head nozzles may be clogged.

Solutions

Perform the nozzle check, and then try Power Cleaning if the print head nozzles are clogged.

➡ "Checking and Cleaning the Print Head" on page 120
➡ "Running Power Cleaning" on page 122

The print settings and the paper size loaded in the printer are different.

Solutions

Change the print settings according to the paper size loaded in the printer. Load paper in the printer that matches the print settings.

Multiple sheets of paper are fed into the printer at the same time.

Solutions

See the following to prevent multiple sheets of paper being fed into the printer at the same time.

➡ "Several Sheets of Paper are Fed at a Time" on page 141

Paper Is Smeared or Scuffed

The following causes can be considered.

Paper is loaded incorrectly.

Solutions

When horizontal banding (perpendicular to the printing direction) appears, or the top or bottom of the paper is smeared, load paper in the correct direction and slide the edge guides to the edges of the paper.

➡ "Loading Paper in the Rear Paper Feeder" on page 31

The paper path is smeared.

Solutions

When vertical banding (horizontal to the printing direction) appears, or the paper is smeared, clean the paper path.

➡ "Cleaning the Paper Path for Ink Smears" on page 124

The paper is curled.

Solutions

Place the paper on a flat surface to check if it is curled. If it is, flatten it.

Cannot Copy Without Margins

Borderless is not set in the print settings.

Solutions

Select **Copy** > **Print Settings** > **Settings** > **Borderless Copy** on the control panel. If you select a paper that does not support borderless printing, you cannot enable borderless settings. Select a paper type that supports borderless printing.

➡ "Paper for Borderless Printing" on page 246

Edges of the Image are Cropped During Borderless Copying

Because the image is slightly enlarged, the protruding area is cropped.

Solutions

Select a smaller enlargement setting.

Select **Copy** > **Print Settings** > **Settings** > **Borderless Copy** > **Expansion** on the control panel, and then change the setting.

The Position, Size, or Margins of the Copies are Incorrect

The following causes can be considered.

The paper is loaded incorrectly.

Solutions

Load paper in the correct direction, and slide the edge guide against the edge of the paper.

➡ "Loading Paper in the Rear Paper Feeder" on page 31

The size of the paper is set incorrectly.

Solutions

Select the appropriate paper size setting.

The originals are not placed correctly.

Solutions

- ❏ Make sure the original is placed correctly against the alignment marks.
- ❏ If the edge of the scanned image is missing, move the original slightly away from the edge of the scanner glass. You cannot scan the area within approximately 1.5 mm (0.06 in.) from the edge of the scanner glass.

➡ "Placing Originals on the Scanner Glass" on page 38

There is dust or dirt on the scanner glass.

Solutions

When placing the originals on the scanner glass, remove any dust or dirt that has stuck to the originals, and clean the scanner glass. If there is dust or stains on the glass, the copy area may extend to include the dust or stains, resulting in the wrong copying position or small images.

➡ "Cleaning the Scanner Glass" on page 124

Uneven Colors, Smears, Dots, or Straight Lines Appear in the Copied Image

The following causes can be considered.

The paper path is dirty.

Solutions

Load and eject paper without printing to clean the paper path.

➡ "Cleaning the Paper Path for Ink Smears" on page 124

There is dust or dirt on the originals or the scanner glass.

Solutions

Remove any dust or dirt that adheres to the originals, and clean the scanner glass.

➡ "Cleaning the Scanner Glass" on page 124

There is dust or dirt on the ADF or originals.

Solutions

Clean the ADF, and remove any dust or dirt that adheres to the originals.

➡ "Cleaning the ADF" on page 125

The original was pressed with too much force.

Solutions

If you press with too much force, blurring, smudges, and spots may occur.

Do not press with too much force on the original or the document cover.

➡ "Placing Originals on the Scanner Glass" on page 38

The copy density setting is too high.

Solutions

Lower the copy density setting.

➡ "Menu Options for Copying" on page 76

Moiré (Cross-Hatch) Patterns Appear in the Copied Image

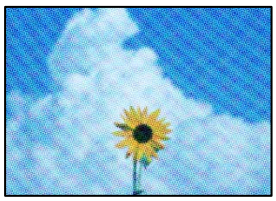

If the original is a printed document such as a magazine or a catalog, a dotted moiré pattern appears.

Solutions

Change the reduce and enlarge setting. If a moiré pattern still appears, place the original at a slightly different angle.

➡ "Menu Options for Copying" on page 76

An Image of the Reverse Side of the Original Appears in the Copied Image

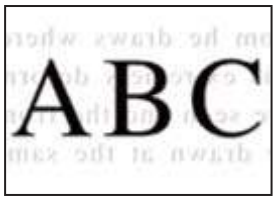

The following causes can be considered.

When scanning thin originals, images on the back may be scanned at the same time.

Solutions

Place the original on the scanner glass and then place a piece of black paper over it.

➡ "Placing Originals on the Scanner Glass" on page 38

The copy density setting is too high.

Solutions

Lower the copy density setting.

➡ "Menu Options for Copying" on page 76

The Text or Image Copied from the ADF is Squeezed or Stretched

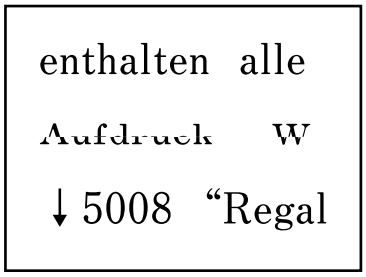

Some originals may not be scanned properly from the ADF.

Solutions

Place originals on the scanner glass.

➡ "Placing Originals on the Scanner Glass" on page 38

Scanned Image Problems

Uneven Colors, Dirt, Spots, and so on Appear when Scanning from the Scanner Glass

There is dust or dirt on the originals or the scanner glass.

Solutions

Remove any dust or dirt that adheres to the originals, and clean the scanner glass.

➡ "Cleaning the Scanner Glass" on page 124

The original was pressed with too much force.

Solutions

If you press with too much force, blurring, smudges, and spots may occur.

Do not press with too much force on the original or the document cover.

➡ "Placing Originals on the Scanner Glass" on page 38

Straight Lines Appear when Scanning from ADF

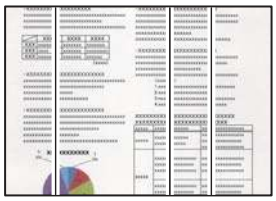

There is dust or dirt on the ADF or originals.

Solutions

Clean the ADF, and remove any dust or dirt that adheres to the originals.

➡ "Cleaning the ADF" on page 125

Offset Appears in the Background of Scanned Images

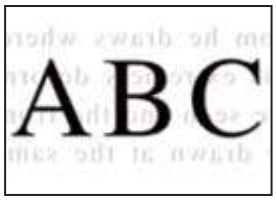

When scanning thin originals, images on the back may be scanned at the same time.

Solutions

When scanning from the scanner glass, place black paper or a desk pad over the original.

➡ "Placing Originals on the Scanner Glass" on page 38

Cannot Scan the Correct Area on the Scanner Glass

The originals are not placed correctly.

Solutions

- ❑ Make sure the original is placed correctly against the alignment marks.
- ❑ If the edge of the scanned image is missing, move the original slightly away from the edge of the scanner glass. You cannot scan the area within approximately 1.5 mm (0.06 in.) from the edge of the scanner glass.

➡ "Placing Originals on the Scanner Glass" on page 38

There is dust or dirt on the scanner glass.

Solutions

Remove any trash or dirt from the scanner glass and document cover. If there is any trash or dirt around the original, the scanning range expands to include it.

➡ "Cleaning the Scanner Glass" on page 124

When scanning multiple originals using Epson ScanSmart, there is not enough of a gap between the originals.

Solutions

When placing multiple originals on the scanner glass, make sure there is a gap of at least 20 mm (0.8 in.) between the originals.

Cannot Solve Problems in the Scanned Image

Check the following if you have tried all of the solutions and have not solved the problem.

There are problems with the scanning software settings.

Solutions

Use Epson Scan 2 Utility to initialize the settings for the scanner software.

Note:
Epson Scan 2 Utility is an application supplied with the scanner software.

1. Start the Epson Scan 2 Utility.
   - ❏ Windows 10
     Click the start button, and then select **EPSON** > **Epson Scan 2 Utility**.
   - ❏ Windows 8.1/Windows 8
     Enter the application name in the search charm, and then select the displayed icon.
   - ❏ Windows 7/Windows Vista/Windows XP
     Click the start button, and then select **All Programs** or **Programs** > **EPSON** > **Epson Scan 2** > **Epson Scan 2 Utility**.
   - ❏ Mac OS
     Select **Go** > **Applications** > **Epson Software** > **Epson Scan 2 Utility**.
2. Select the **Other** tab.
3. Click **Reset**.

If initialization does not solve the problem, uninstall and re-install the scanner software.

➡ "Installing or Uninstalling Applications Separately" on page 129

The Text or Image Scanned from the ADF is Squeezed or Stretched

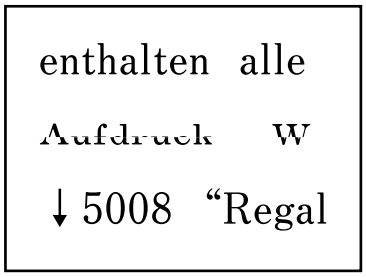

Some originals may not be scanned properly from the ADF.

Place originals on the scanner glass.

Related Information

➡ "Placing Originals on the Scanner Glass" on page 38

The Quality of the Sent Fax is Poor

Quality of the Sent Fax is Poor

The following causes can be considered.

There is dust or dirt on the originals or the scanner glass.

Solutions

Remove any dust or dirt that adheres to the originals, and clean the scanner glass.

➡ "Cleaning the Scanner Glass" on page 124

The original was pressed with too much force.

Solutions

If you press with too much force, blurring, smudges, and spots may occur.

Do not press with too much force on the original or the document cover.

➡ "Placing Originals on the Scanner Glass" on page 38

Straight Lines Appear when Sending Faxes from the ADF

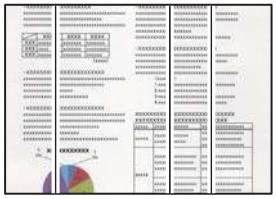

The following causes can be considered.

There is dust or dirt on the ADF or originals.

Solutions

Clean the ADF, and remove any dust or dirt that adheres to the originals.

➡ "Cleaning the ADF" on page 125

The Image Quality of the Sent Fax is Poor

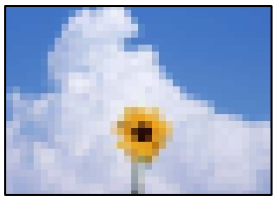

The following causes can be considered.

The resolution is set to low.

Solutions

If you do not know the performance of the sender's fax machine, set the following before sending a fax.

- ❑ Select **Fax** > **Fax Settings** and then make the **Resolution** setting to set the highest quality image.
- ❑ Select **Fax** > **Fax Settings** and then enable **Direct Send**.

  Note that if you set **Resolution** to **Photo** but you send the fax without enabling **Direct Send**, the fax may be sent at a lower resolution.

ECM setting is disabled.

Solutions

Select **Settings** > **Fax Settings** > **Basic Settings** and enable the **ECM** setting on the printer's control panel. This may clear errors that occur due to connection problems. Note that the speed of sending and receiving faxes may be slower than when **ECM** is disabled.

An Image of the Reverse Side of the Original Appears in the Sent Fax

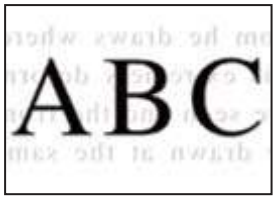

The following causes can be considered.

When scanning thin originals, images on the back may be scanned at the same time.

Solutions

Place the original on the scanner glass and then place a piece of black paper over it.

➡ "Placing Originals on the Scanner Glass" on page 38

The density setting is high when sending faxes.

Solutions

Select **Fax** > **Fax Settings** > **Scan Settings** > **Density**, and then lower the setting.

Received Fax Quality is Poor

The Image Quality of Received Faxes is Poor

The following causes can be considered.

ECM setting is disabled.

Solutions

Select **Settings** > **Fax Settings** > **Basic Settings** and enable the **ECM** setting on the printer's control panel. This may clear errors that occur due to connection problems. Note that the speed of sending and receiving faxes may be slower than when **ECM** is disabled.

The image quality setting is low on the sender's fax machine.

Solutions

Ask the sender to send faxes at a higher quality.

Cannot Solve Problem

If you cannot solve the problem after trying all of the solutions, contact Epson support.

If you cannot solve printing or copying problems, see the following related information.

Related Information

➡ "Cannot Solve Printing or Copying Problems" on page 221

Cannot Solve Printing or Copying Problems

Try the following problems in order starting at the top until you solve the problem.

❏ Make sure you match the paper type loaded in the printer and the paper type set on the printer to the paper type settings in the printer driver.

"Paper Size and Type Settings" on page 29

❏ Use a higher quality setting on the control panel or the printer driver.

❏ To check the actual ink remaining, visually check the ink levels in the printer's tanks. Refill the ink tanks if the ink levels are below the lower lines.

❏ Align the print head.

"Aligning the Print Head" on page 123

- ❏ Run a nozzle check to see if the print head nozzles are clogged.

  If there are missing segments in the nozzle check pattern, the nozzles may be clogged. Repeat head cleaning and the nozzle check alternately 3 times and check if the clogging has cleared.

  Note that print head cleaning uses some ink.

  "Checking and Cleaning the Print Head" on page 120

- ❏ Turn off the printer, wait for at least 12 hours, and then check if the clogging has cleared.

  If the problem is clogging, leaving the printer for a while without printing may solve the problem.

  You can check the following items while the printer is off.

- ❏ Check that you are using genuine Epson ink bottles.

  Try to use genuine Epson ink bottles. The use of non-genuine ink bottles may cause print quality to decline.

- ❏ Make sure that there are no paper fragments left inside the printer.

  When you remove the paper, do not touch the translucent film with your hand or the paper.

- ❏ Check the paper.

  Check if the paper is curled or loaded with the printable side facing up.

  "Paper Handling Precautions" on page 29

  "Available Paper and Capacities" on page 245

  "Unavailable Paper Types" on page 247

- ❏ If you turn off the printer, wait for at least 12 hours, and if print quality has still not improved, run Power Cleaning.

  "Running Power Cleaning" on page 122

If you cannot solve the problem by checking the solutions above, you may need to request repairs. Contact Epson support.

Related Information

➡ "Before Contacting Epson" on page 280

➡ "Contacting Epson Support" on page 280

Adding or Replacing the Computer or Devices

Connecting to a Printer that has been Connected to the Network. 224

Re-setting the Network Connection. 225

Connecting a Smart Device and Printer Directly (Wi-Fi Direct). 231

Checking the Network Connection Status. 235

Connecting to a Printer that has been Connected to the Network

When the printer has already been connected to the network, you can connect a computer or a smart device to the printer over the network.

Using a Network Printer from a Second Computer

We recommend using the installer to connect the printer to a computer. You can run the installer using one of the following methods.

❏ Setting up from the website

Access the following website, and then enter the product name. Go to **Setup**, and then start setting up.

https://epson.sn

❏ Setting up using the software disc (only for the models that come with a software disc and users with Windows computers with disc drives.)

Insert the software disc into the computer, and then follow the on-screen instructions.

Selecting the Printer

Follow the on-screen instructions until the following screen is displayed, select the printer name you want to connect to, and then click **Next**.

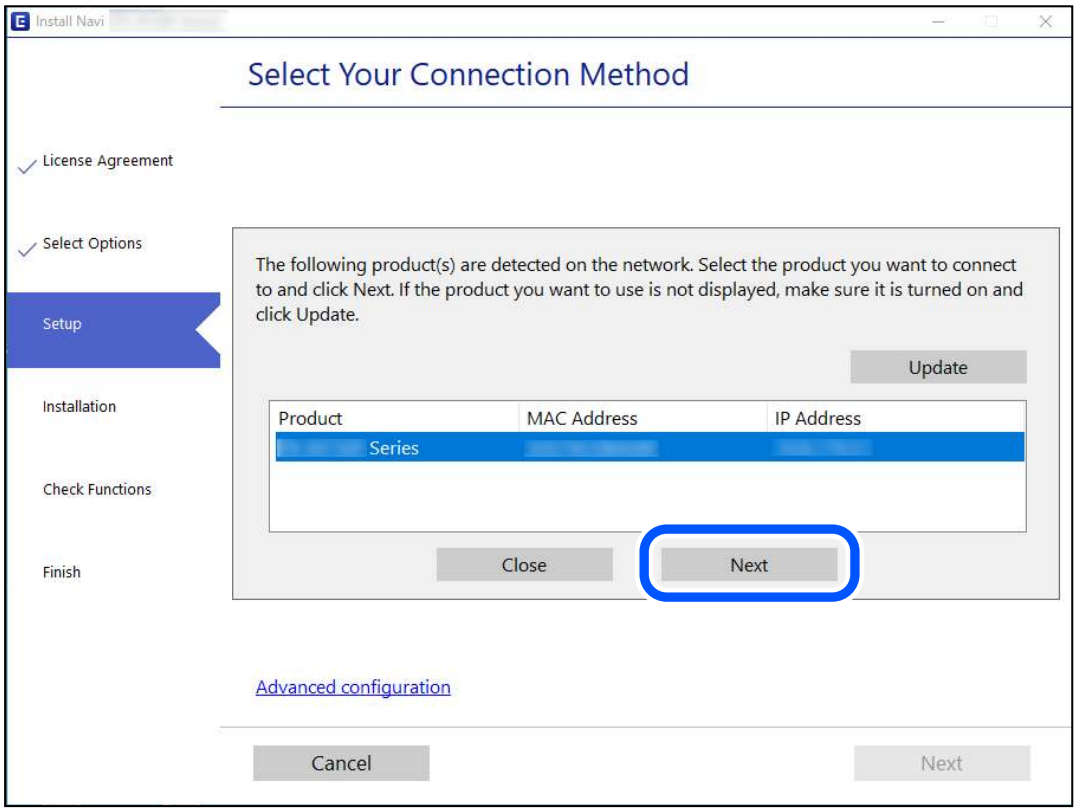

Follow the on-screen instructions.

Using a Network Printer from a Smart Device

You can connect a smart device to the printer using one of the following methods.

Connecting over a wireless router

Connect the smart device to the same Wi-Fi network (SSID) as the printer.

See the following for more details.

"Making Settings for Connecting to the Smart Device" on page 225

Connecting by Wi-Fi Direct

Connect the smart device to the printer directly without a wireless router.

See the following for more details.

"Connecting a Smart Device and Printer Directly (Wi-Fi Direct)" on page 231

Re-setting the Network Connection

This section explains how to make the network connection settings and change the connection method when replacing the wireless router or the computer.

When Replacing the Wireless Router

When you replace the wireless router, make settings for the connection between the computer or the smart device and the printer.

You need to make these settings if you change your Internet service provider and so on.

Making Settings for Connecting to the Computer

We recommend using the installer to connect the printer to a computer. You can run the installer using one of the following methods.

- ❏ Setting up from the website

  Access the following website, and then enter the product name. Go to **Setup**, and then start setting up.

  https://epson.sn

- ❏ Setting up using the software disc (only for the models that come with a software disc and users with Windows computers with disc drives.)

  Insert the software disc into the computer, and then follow the on-screen instructions.

Making Settings for Connecting to the Smart Device

You can use the printer from a smart device when you connect the printer to the same Wi-Fi network (SSID) as the smart device. To use the printer from a smart device, set up from the following website. Access to the website from the smart device that you want to connect to the printer.

http://epson.sn > **Setup**

When Changing the Computer

When changing the computer, make connection settings between the computer and the printer.

Making Settings for Connecting to the Computer

We recommend using the installer to connect the printer to a computer. You can run the installer using one of the following methods.

❏ Setting up from the website

Access the following website, and then enter the product name. Go to **Setup**, and then start setting up.

https://epson.sn

❏ Setting up using the software disc (only for the models that come with a software disc and users with Windows computers with disc drives.)

Insert the software disc into the computer, and then follow the on-screen instructions.

Follow the on-screen instructions.

Changing the Connection Method to the Computer

This section explains how to change the connection method when the computer and the printer have been connected.

Changing the Network Connection from Ethernet to Wi-Fi

Change the Ethernet connection to Wi-Fi connection from the printer's control panel. The changing connection method is basically the same as the Wi-Fi connection settings.

Related Information

➡ "Making Wi-Fi Settings from the Control Panel" on page 228

Changing the Network Connection from Wi-Fi to Ethernet

Follow the steps below to change the network connection to Ethernet from Wi-Fi using the control panel.

1. Connect the printer to a router using an Ethernet cable.
2. Disable the Wi-Fi from the printer's control panel.

Changing from USB to a Network Connection

Using the installer and re-set up in a different connection method.

❏ Setting up from the website

Access the following website, and then enter the product name. Go to **Setup**, and then start setting up.

https://epson.sn

❏ Setting up using the software disc (only for the models that come with a software disc and users with Windows computers with disc drives.)

Insert the software disc into the computer, and then follow the on-screen instructions.

Selecting Change the Connection Methods

Follow the on-screen instructions until the following screen is displayed.

Select the network connection that you want to use, **Connect via wireless network (Wi-Fi)** or **Connect via wired LAN (Ethernet)**, and then click **Next**.

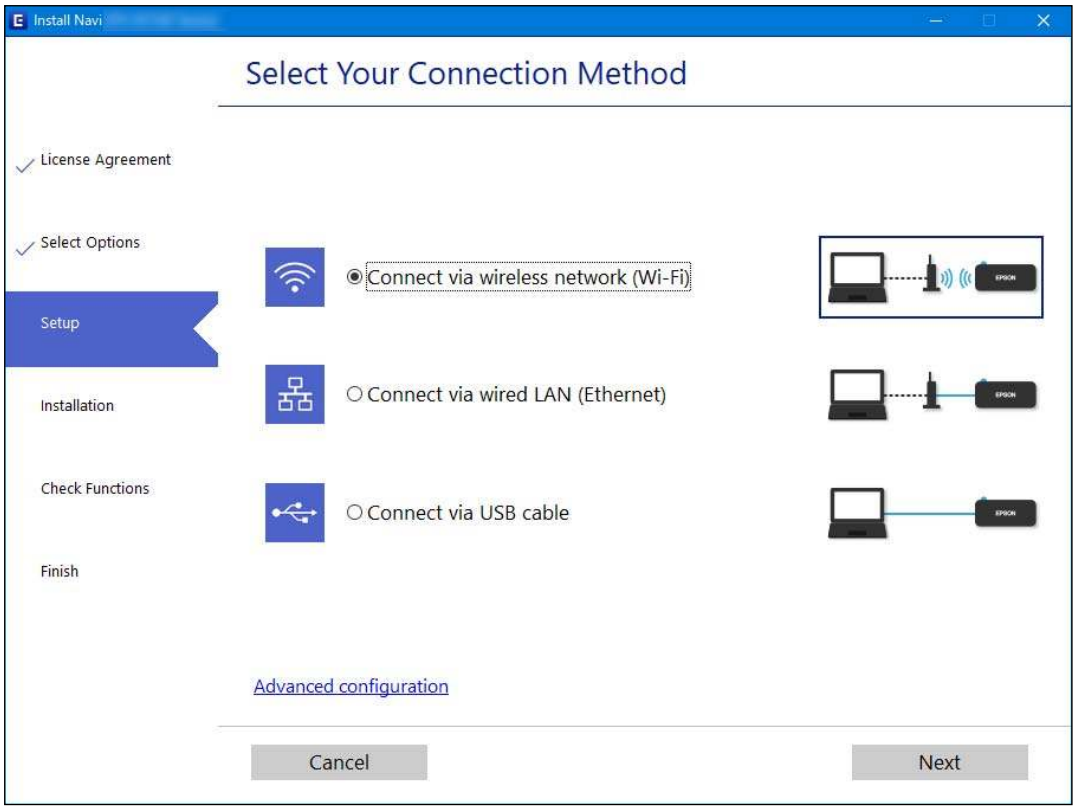

Note:
The displayed connection method differs depending on the model.

Follow the on-screen instructions.

Enabling Energy Efficient Ethernet

The Energy Efficient Ethernet for the printer is compliant with IEEE802.3az.

When using this function, enable IEEE802.3az for the printer. All devices connected to the network should support this function.

1. Access Web Config.

   "Running Web Config on a Web Browser" on page 255

2. Select **Advanced Settings** from the list at the top right of the window.

3. Select **Network Settings** > **Wired LAN**.

4. Select **ON** for **IEEE 802.3az**.

5. Click **Next**.

6. Click **OK**.

Making Wi-Fi Settings from the Control Panel

You can make network settings from the printer's control panel in several ways. Choose the connection method that matches the environment and conditions that you are using.

If you know the information for the wireless router such as SSID and password, you can make settings manually.

If the wireless router supports WPS, you can make settings by using push button setup.

After connecting the printer to the network, connect to the printer from the device that you want to use (computer, smart device, tablet, and so on.)

Related Information

➡ "Making Wi-Fi Settings by Entering the SSID and Password" on page 228
➡ "Making Wi-Fi Settings by Push Button Setup (WPS)" on page 229
➡ "Making Wi-Fi Settings by PIN Code Setup (WPS)" on page 230

Making Wi-Fi Settings by Entering the SSID and Password

You can set up a Wi-Fi network by entering the information necessary to connect to a wireless router from the printer's control panel. To set up using this method, you need the SSID and password for a wireless router.

Note:
If you are using an wireless router with its default settings, the SSID and password are on the label. If you do not know the SSID and password, contact the person who set up the wireless router, or see the documentation provided with the wireless router.

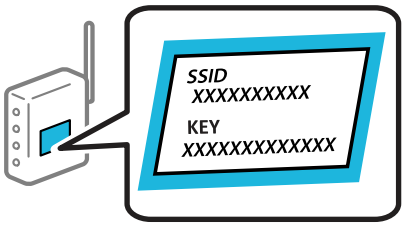

1. Select **Wi-Fi Setup** on the home screen.

   To select an item, use the ▲▼◀▶ buttons, and then press the OK button.

2. Select **Wi-Fi (Recommended)**.

3. Press the OK button to proceed.

4. Select **Wi-Fi Setup Wizard**.

5. Select the SSID for the wireless router from printer's control panel, and then press the OK button.

   Note:

   ❏ *If the SSID you want to connect to is not displayed on the printer's control panel, press the ↻ button to update the list. If it is still not displayed, select* ***Other SSIDs****, and then enter the SSID directly.*

   ❏ *If you do not know the SSID, check if it is written on the label of the wireless router. If you are using the wireless router with its default settings, use the SSID written on the label.*

6. Enter the password.

   Select whether or not you print a network connection report after finishing the settings.

   Note:

   ❏ *The password is case-sensitive.*

   ❏ *If you do not know the network name (SSID) check if the information is written on the label of the wireless router. If you are using the wireless router with its default settings, use the SSID on the label. If you cannot find any information, see the documentation provided with the wireless router.*

7. When you have setup finished, and then press the OK button.

   Note:

   If you fail to connect, load paper, and then press the ◇ button to print a network connection report.

Related Information

➡ "Entering Characters" on page 26

➡ "Checking the Network Connection Status" on page 235

Making Wi-Fi Settings by Push Button Setup (WPS)

You can automatically set up a Wi-Fi network by pressing a button on the wireless router. If the following conditions are met, you can set up by using this method.

❏ The wireless router is compatible with WPS (Wi-Fi Protected Setup).

❏ The current Wi-Fi connection was established by pressing a button on the wireless router.

1. Select **Wi-Fi Setup** on the home screen.

   To select an item, use the ▲ ▼ ◀ ▶ buttons, and then press the OK button.

2. Select **Wi-Fi (Recommended)**.

3. Press the OK button to proceed.

4. Select **Push Button Setup (WPS)**.

5. Hold down the [WPS] button on the wireless router until the security light flashes.

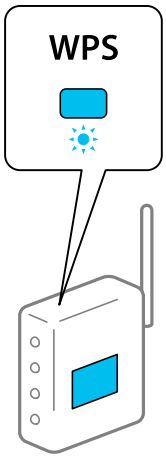

If you do not know where the [WPS] button is, or there are no buttons on the wireless router, see the documentation provided with your wireless router for details.

6. Press the OK button on the printer's control panel. Follow the on-screen instruction hereafter.

Note:
If connection fails, restart the wireless router, move it closer to the printer, and try again. If it still does not work, print a network connection report and check the solution.

Related Information

➡ "Checking the Network Connection Status" on page 235

Making Wi-Fi Settings by PIN Code Setup (WPS)

You can automatically connect to an wireless router by using a PIN code. You can use this method to set up if an wireless router is capable of WPS (Wi-Fi Protected Setup). Use a computer to enter a PIN code into the wireless router.

1. Select **Wi-Fi Setup** on the home screen.

   To select an item, use the ▲▼◀▶ buttons, and then press the OK button.

2. Select **Wi-Fi (Recommended)**.

3. Press the OK button to proceed.

4. Select **Others**.

5. Select **PIN Code (WPS)**.

6. Use your computer to enter the PIN code (an eight digit number) displayed on the printer's control panel into the wireless router within two minutes.

   Note:
   See the documentation provided with your wireless router for details on entering a PIN code.

7. Press the OK button on the printer.

   Setup is complete when the setup completion message is displayed.

   Note:
   If connection fails, restart the wireless router, move it closer to the printer, and try again. If it still does not work, print a connection report and check the solution.

Related Information

➡ "Checking the Network Connection Status" on page 235

Connecting a Smart Device and Printer Directly (Wi-Fi Direct)

Wi-Fi Direct (Simple AP) allows you to connect a smart device directly to the printer without a wireless router and print from the smart device.

About Wi-Fi Direct

Use this connection method when you are not using Wi-Fi at home or at the office, or when you want to connect the printer and the computer or smart device directly. In this mode, the printer acts as an wireless router and you can connect the devices to the printer without having to use a standard wireless router. However, devices directly connected to the printer cannot communicate with each other through the printer.

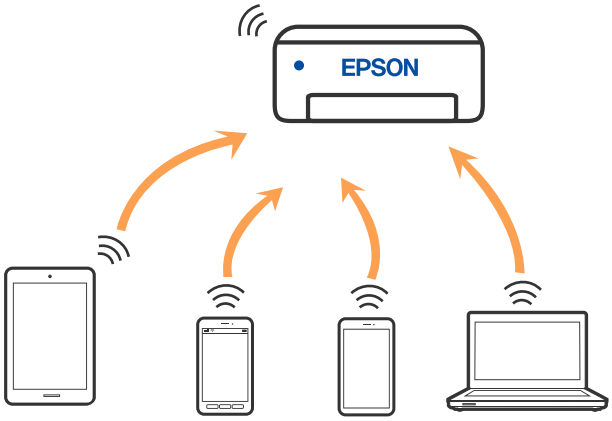

The printer can be connected by Wi-Fi or Ethernet, and Wi-Fi Direct (Simple AP) connection simultaneously. However, if you start a network connection in Wi-Fi Direct (Simple AP) connection when the printer is connected by Wi-Fi, the Wi-Fi is temporarily disconnected.

Connecting to Devices using Wi-Fi Direct

This method allows you to connect the printer directly to smart devices without a wireless router.

Note:
For iOS or Android users, it is convenient to set up from Epson Smart Panel.

You only need to make these settings for the printer and the smart device that you want to connect to once. Unless you disable Wi-Fi Direct or restore the network settings to their defaults, you do not need to make these settings again.

1. Select **Wi-Fi Setup** on the home screen.

   To select an item, use the ▲ ▼ ◀ ▶ buttons, and then press the OK button.

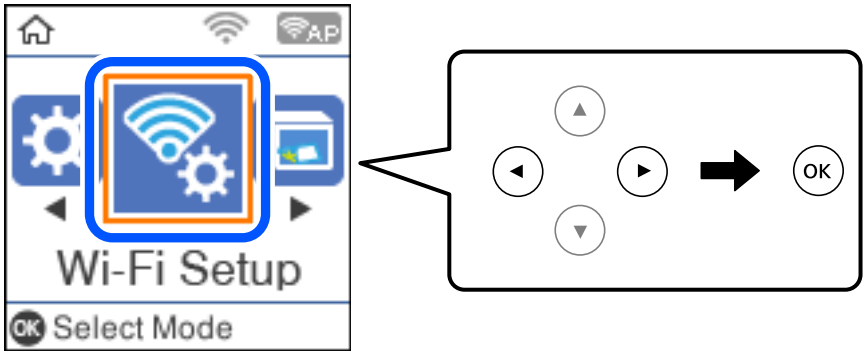

2. Select **Wi-Fi Direct**.
3. Check the message, and then press the OK button to proceed.
4. Check the message, and then press the OK button to proceed.
5. Press the ◀.
6. Select Other OS Devices.
7. Scroll the screen with the ▼ button, and check the connection information for Wi-Fi Direct.

8. On the smart device's Wi-Fi screen, select the SSID shown on the printer's control panel, and then enter the password.

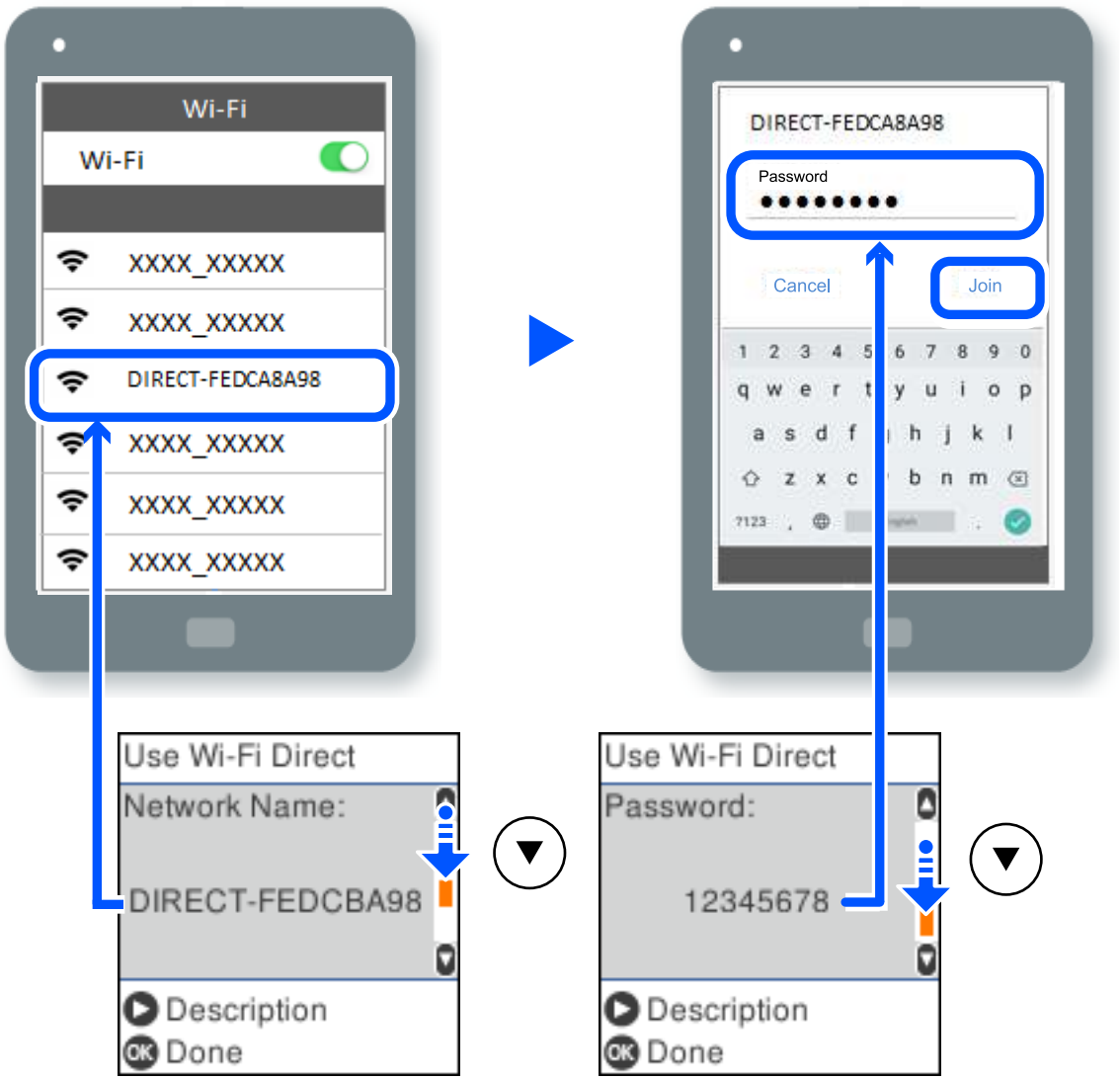

9. On the printer's control panel, press the OK button.

10. On the printing app screen for the smart device, select the printer that you want to connect to.

For smart devices that have been connected to the printer before, select the network name (SSID) on the smart device's Wi-Fi screen to connect them again.

Note:
If you are using an iOS device, you can also connect by scanning the QR code with the standard iOS camera. See the link below http://epson.sn.

Disconnecting Wi-Fi Direct (Simple AP) Connection

There are two methods available to disable a Wi-Fi Direct (Simple AP) connection; you can disable all connections by using the printer's control panel, or disable each connection from the computer or the smart device. This section explains how to disable all connections.

Important:

When Wi-Fi Direct (Simple AP) connection disabled, all computers and smart devices connected to the printer in Wi-Fi Direct (Simple AP) connection are disconnected.

Note:

If you want to disconnect a specific device, disconnect from the device instead of the printer. Use one of the following methods to disconnect the Wi-Fi Direct (Simple AP) connection from the device.

- *Disconnect the Wi-Fi connection to the printer's network name (SSID).*
- *Connect to another network name (SSID).*

1. Select **Wi-Fi Setup** on the home screen.

   To select an item, use the ▲ ▼ ◀ ▶ buttons, and then press the OK button.

2. Select **Wi-Fi Direct**.
3. Press the OK button to proceed.
4. Press the OK button to proceed.
5. Press the button to display the setting screen.
6. Select **Disable Wi-Fi Direct**.
7. Check the message, and then press the OK button.

Changing the Wi-Fi Direct (Simple AP) Settings Such as the SSID

When a Wi-Fi Direct (Simple AP) connection is enabled, you can change the Wi-Fi Direct settings such as the network name and the password.

1. Select **Wi-Fi Setup** on the home screen.

   To select an item, use the ▲ ▼ ◀ ▶ buttons, and then press the OK button.

2. Select **Wi-Fi Direct**.
3. Press the OK button to proceed.
4. Press the OK button to proceed.
5. Press the button to display the setting screen.
6. Select the menu item that you want to change.

   You can select the following menu items.

❏ **Change Network Name**

Change the Wi-Fi Direct (simple AP) network name (SSID) used for connecting to the printer to your arbitrary name. You can set the network name (SSID) in ASCII characters that is displayed on the software keyboard on the control panel.

When changing the network name (SSID), all connected devices are disconnected. Use the new network name (SSID) if you want to re-connect the device.

❏ **Change Password**

Change the Wi-Fi Direct (simple AP) password for connecting to the printer to your arbitrary value. You can set the password in ASCII characters that is displayed on the software keyboard on the control panel.

When changing the password, all connected devices are disconnected. Use the new password if you want to re-connect the device.

❏ **Disable Wi-Fi Direct**

Disable Wi-Fi Direct (simple AP) settings of the printer. When disabling it, all devices connected to the printer in Wi-Fi Direct (Simple AP) connection are disconnected.

❏ **Restore Default Settings**

Restore all Wi-Fi Direct (simple AP) settings to their defaults.

The Wi-Fi Direct (simple AP) connection information of the smart device saved to the printer is deleted.

7. Follow the on-screen instruction.

Checking the Network Connection Status

You can check the network connection status in the following way.

Related Information

➡ "Checking the Network Connection Status from the Control Panel" on page 235
➡ "Printing a Network Connection Report" on page 236

Checking the Network Connection Status from the Control Panel

You can check the network connection status using the network icon or the network information on the printer's control panel.

Checking the Network Connection Status using the Network Icon

You can check the network connection status and strength of the radio wave using the network icon on the printer's home screen.

Related Information

➡ "Guide to the Network Icon" on page 25

Printing a Network Connection Report

You can print a network connection report to check the status between the printer and the wireless router.

1. Load papers.
2. Select **Settings** on the home screen.

   To select an item, use the ▲▼◀▶ buttons, and then press the OK button.
3. Select **Network Settings** > **Connection Check**.

   The connection check starts.
4. Press the ⊡ button.
5. Follow the instructions on the printer's screen to print the network connection report.

   If an error has occurred, check the network connection report, and then follow the printed solutions.
6. Press the OK button.

Messages and Solutions on the Network Connection Report

Check the messages and error codes on the network connection report, and then follow the solutions.

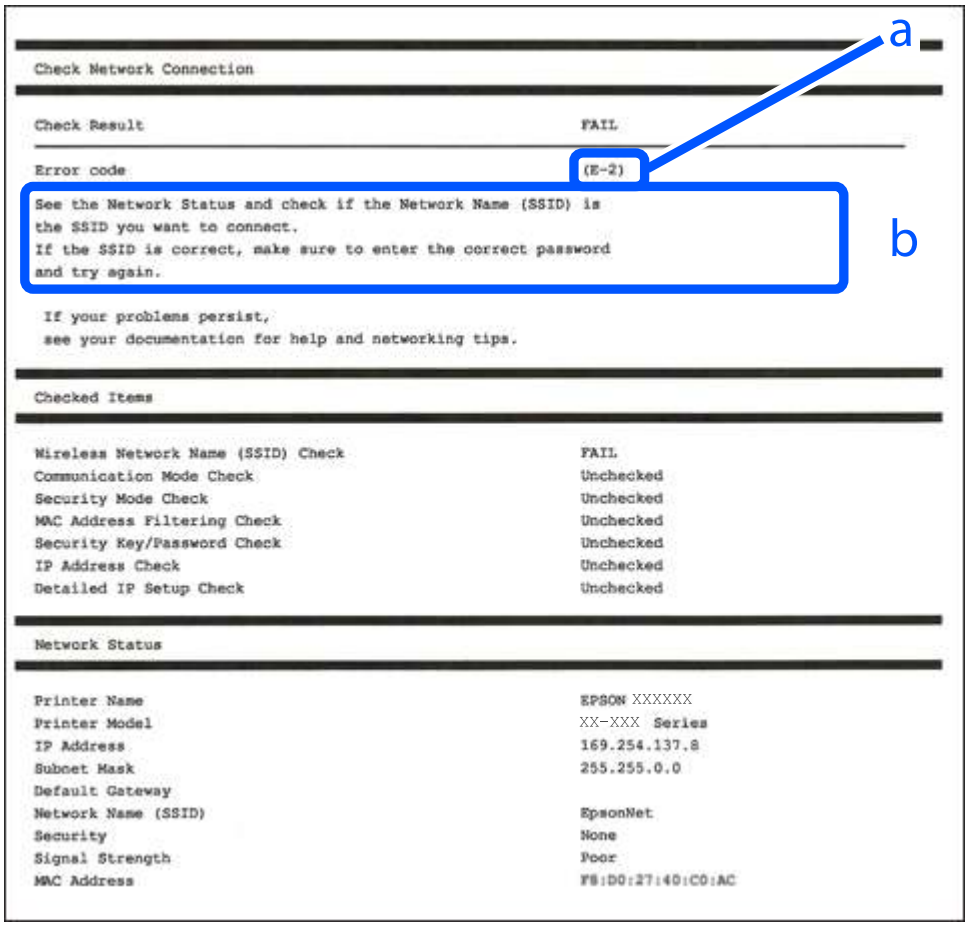

a. Error code

b. Messages on the Network Environment

Related Information

➡ "E-1" on page 238
➡ "E-2, E-3, E-7" on page 238
➡ "E-5" on page 239
➡ "E-6" on page 239
➡ "E-8" on page 239
➡ "E-9" on page 240
➡ "E-10" on page 240
➡ "E-11" on page 240
➡ "E-12" on page 241
➡ "E-13" on page 241
➡ "Message on the Network Environment" on page 242

E-1

Solutions:

- ❏ Make sure the Ethernet cable is securely connected to your printer and to your hub or other network device.
- ❏ Make sure your hub or other network device is turned on.
- ❏ If you want to connect the printer by Wi-Fi, make Wi-Fi settings for the printer again because it is disabled.

E-2, E-3, E-7

Solutions:

- ❏ Make sure your wireless router is turned on.
- ❏ Confirm that your computer or device is connected correctly to the wireless router.
- ❏ Turn off the wireless router. Wait for about 10 seconds, and then turn it on.
- ❏ Place the printer closer to your wireless router and remove any obstacles between them.
- ❏ If you have entered the SSID manually, check if it is correct. Check the SSID from the **Network Status** part on the network connection report.
- ❏ If an wireless router has multiple SSIDs, select the SSID that is displayed. When the SSID is using a non-compliant frequency, the printer does not display them.
- ❏ If you are using push button setup to establish a network connection, make sure your wireless router supports WPS. You cannot use push button setup if your wireless router does not support WPS.
- ❏ Makes sure your SSID uses only ASCII characters (alphanumeric characters and symbols). The printer cannot display an SSID that contains non-ASCII characters.
- ❏ Makes sure you know your SSID and password before connecting to the wireless router. If you are using a wireless router with its default settings, the SSID and password are located on a label on the wireless router. If you do not know your SSID and password, contact the person who set up the wireless router, or see the documentation provided with the wireless router.
- ❏ If you are connecting to an SSID generated from a tethering smart device, check for the SSID and password in the documentation provided with the smart device.
- ❏ If your Wi-Fi connection suddenly disconnects, check for the conditions below. If any of these conditions are applicable, reset your network settings by downloading and running the software from the following website.

  http://epson.sn > **Setup**

  - ❏ Another smart device was added to the network using push button setup.
  - ❏ The Wi-Fi network was set up using any method other than push button setup.

Related Information

➡ "Making Settings for Connecting to the Computer" on page 226
➡ "Making Wi-Fi Settings from the Control Panel" on page 228

E-5

Solutions:

Make sure the wireless router's security type is set to one of the following. If it is not, change the security type on the wireless router, and then reset the printer's network settings.

- ❏ WEP-64 bit (40 bit)
- ❏ WEP-128 bit (104 bit)
- ❏ WPA PSK (TKIP/AES)*
- ❏ WPA2 PSK (TKIP/AES)*
- ❏ WPA (TKIP/AES)
- ❏ WPA2 (TKIP/AES)
- ❏ WPA3-SAE (AES)

* WPA PSK is also known as WPA Personal. WPA2 PSK is also known as WPA2 Personal.

E-6

Solutions:

- ❏ Check if MAC address filtering is disabled. If it is enabled, register the printer's MAC address so that it is not filtered. See the documentation provided with the wireless router for details. You can check the printer's MAC address from the **Network Status** part on the network connection report.
- ❏ If your wireless router is using shared authentication with WEP security, make sure the authentication key and index are correct.
- ❏ If the number of connectable devices on the wireless router is less than the number of network devices that you want to connect, make settings on the wireless router to increase the number of connectable devices. See the documentation provided with the wireless router to make settings.

Related Information

➡ "Making Settings for Connecting to the Computer" on page 226

E-8

Solutions:

- ❏ Enable DHCP on the wireless router if the printer's Obtain IP Address setting is set to Auto.
- ❏ If the printer's Obtain IP Address setting is set to Manual, the IP address you manually set is invalid due to out of range (for example: 0.0.0.0). Set a valid IP address from the printer's control panel.

Related Information

➡ "Printing a Network Status Sheet" on page 242

E-9

Solutions:

Check the following.

❏ Devices are turned on.

❏ You can access the Internet and other computers or network devices on the same network from the devices you want to connect to the printer.

If still does not connect your printer and network devices after confirming the above, turn off the wireless router. Wait for about 10 seconds, and then turn it on. Then reset your network settings by downloading and running the installer from the following website.

http://epson.sn > **Setup**

Related Information

➡ "Making Settings for Connecting to the Computer" on page 226

E-10

Solutions:

Check the following.

❏ Other devices on the network are turned on.

❏ Network addresses (IP address, subnet mask, and default gateway) are correct if you have set the printer's Obtain IP Address to Manual.

Reset the network address if they are incorrect. You can check the IP address, subnet mask, and default gateway from the **Network Status** part on the network connection report.

If DHCP is enabled, change the printer's Obtain IP Address setting to Auto. If you want to set the IP address manually, check the printer's IP address from the **Network Status** part on the network connection report, and then select Manual on the network settings screen. Set the subnet mask to [255.255.255.0].

If still does not connect your printer and network devices, turn off the wireless router. Wait for about 10 seconds, and then turn it on.

Related Information

➡ "Printing a Network Status Sheet" on page 242

E-11

Solutions:

Check the following.

❏ The default gateway address is correct if you set the printer's TCP/IP Setup setting to Manual.

❏ The device that is set as the default gateway is turned on.

Set the correct default gateway address. You can check the default gateway address from the **Network Status** part on the network connection report.

Related Information

➡ "Printing a Network Status Sheet" on page 242

E-12

Solutions:

Check the following.

❏ Other devices on the network are turned on.

❏ The network addresses (IP address, subnet mask, and default gateway) are correct if you are entering them manually.

❏ The network addresses for other devices (subnet mask and default gateway) are the same.

❏ The IP address does not conflict with other devices.

If still does not connect your printer and network devices after confirming the above, try the following.

❏ Turn off the wireless router. Wait for about 10 seconds, and then turn it on.

❏ Make network settings again using the installer. You can run it from the following website.

http://epson.sn > **Setup**

❏ You can register several passwords on a wireless router that uses WEP security type. If several passwords are registered, check if the first registered password is set on the printer.

Related Information

➡ "Printing a Network Status Sheet" on page 242
➡ "Making Settings for Connecting to the Computer" on page 226

E-13

Solutions:

Check the following.

❏ Network devices such as a wireless router, hub, and router are turned on.

❏ The TCP/IP Setup for network devices has not been set up manually. (If the printer's TCP/IP Setup is set automatically while the TCP/IP Setup for other network devices is performed manually, the printer's network may differ from the network for other devices.)

If it still does not work after checking the above, try the following.

❏ Turn off the wireless router. Wait for about 10 seconds, and then turn it on.

❏ Make network settings on the computer that is on the same network as the printer using the installer. You can run it from the following website.

http://epson.sn > **Setup**

❏ You can register several passwords on a wireless router that uses the WEP security type. If several passwords are registered, check if the first registered password is set on the printer.

Related Information

➡ "Printing a Network Status Sheet" on page 242
➡ "Making Settings for Connecting to the Computer" on page 226

Message on the Network Environment

Message	Solution
The Wi-Fi environment needs to be improved. Turn the wireless router off and then turn it on. If the connection does not improve, see the documentation for the wireless router.	After moving the printer closer to the wireless router and removing any obstacles between them, turn off the wireless router. Wait for about 10 seconds, and then turn it on. If it still does not connect, see the documentation supplied with the wireless router.
*No more devices can be connected. Disconnect one of the connected devices if you want to add another one.	Computer and smart devices that can be connected simultaneously are connected in full in the Wi-Fi Direct (Simple AP) connection. To add another computer or smart device, disconnect one of the connected devices or connect it to the other network first. You can confirm the number of wireless devices which can be connected simultaneously and the number of connected devices by checking the network status sheet or the printer's control panel.
The same SSID as Wi-Fi Direct exists in the environment. Change the Wi-Fi Direct SSID if you cannot connect a smart device to the printer.	On the printer's control panel, go to Wi-Fi Direct Setup screen and select the menu to change the setting. You can change the network name following after DIRECT-XX-. Enter within 22 characters.

Printing a Network Status Sheet

You can check the detailed network information by printing it.

1. Load papers.
2. Select **Settings** on the home screen.

   To select an item, use the ▲ ▼ ◀ ▶ buttons, and then press the OK button.
3. Select **Network Settings** > **Print Status Sheet**.
4. Press the ⊡ button.

   The network status sheet is printed.

Checking the Network of the Computer (Windows only)

By using the command prompt, check the connection status of the computer and the connection path to the printer. This will lead you to solve the problems.

❏ ipconfig command

Display the connection status of the network interface that is currently used by the computer.

By comparing the setting information with actual communication, you can check whether the connection is correct. In case there are multiple DHCP servers on the same network, you can find out the actual address assigned to the computer, the referred DNS server, etc.

❏ Format : ipconfig /all

❏ Examples :

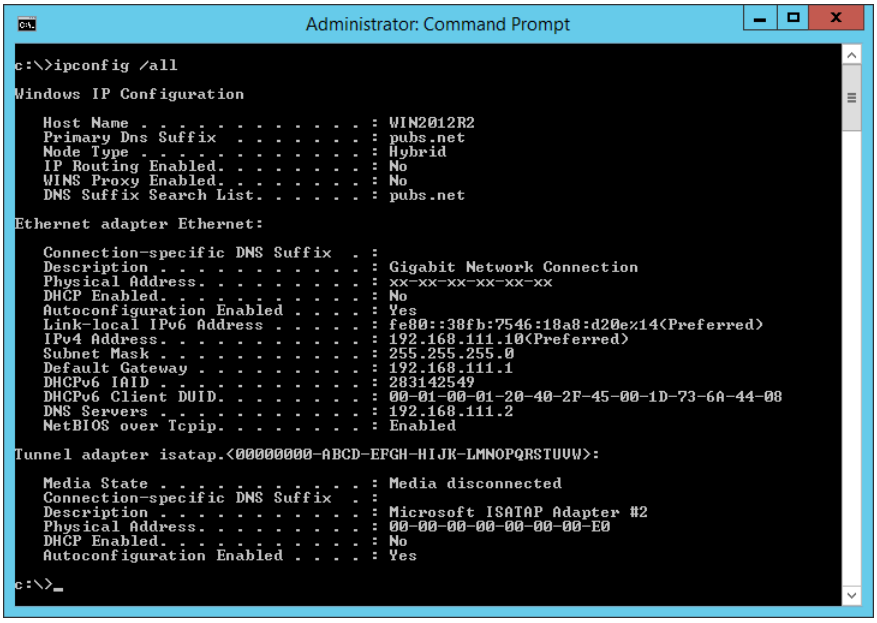

❏ pathping command

You can confirm the list of routers passing through the destination host and the routing of communication.

❏ Format : pathping xxx.xxx.xxx.xxx

❏ Examples : pathping 192.0.2.222

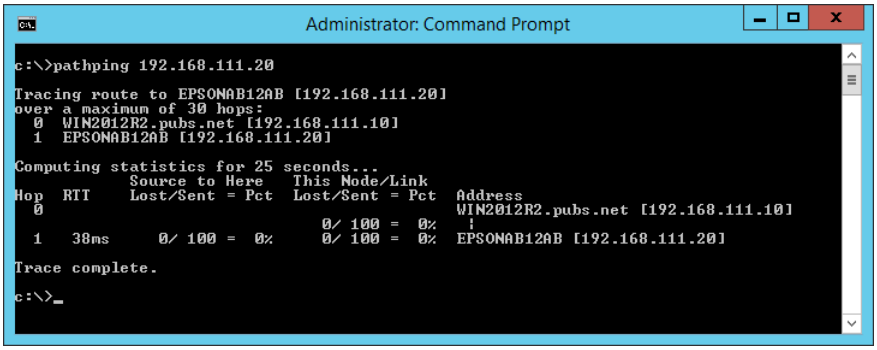

Product Information

Paper Information. 245

Consumable Products Information. 248

Software Information. 249

Settings Menu List. 257

Product Specifications. 268

Regulatory Information. 276

Paper Information

Available Paper and Capacities

Genuine Epson Paper

Epson recommends using genuine Epson paper to ensure high-quality printouts.

Note:

- *The availability of paper varies by location. For the latest information on paper available in your area, contact Epson support.*
- *See the following for information on available paper types for borderless and 2-sided printing.*

"Paper for Borderless Printing" on page 246

"Paper for 2-Sided Printing" on page 247

Paper suitable for printing documents

Media Name	Size	Loading Capacity (Sheets)
Epson Bright White Ink Jet Paper	A4	Up to the line indicated by the triangle symbol on the edge guide.

Paper suitable for printing documents and photos

Media Name	Size	Loading Capacity (Sheets)
Epson Photo Quality Ink Jet Paper	A4	80
Epson Double-sided Photo Quality Ink Jet Paper	Letter, A4	80
Epson Matte Paper-Heavyweight	A4	20
Epson Double-Sided Matte Paper	A4	1

Paper suitable for printing photos

Media Name	Size	Loading Capacity (Sheets)
Epson Ultra Glossy Photo Paper	A4, 13x18 cm (5x7 in.), 10x15 cm (4x6 in.)	20*
Epson Premium Glossy Photo Paper	A4, 13x18 cm (5x7 in.), 16:9 wide size(102x181 mm), 10x15 cm (4x6 in.)	20*
Epson Premium Semigloss Photo Paper	A4, 13x18 cm (5x7 in.), 10x15 cm (4x6 in.)	20*
Epson Photo Paper Glossy	A4, 13x18 cm (5x7 in.), 10x15 cm (4x6 in.)	20*

Media Name	Size	Loading Capacity (Sheets)
Epson Value Glossy Photo Paper	A4, 10x15 cm (4x6 in.)	20*

* Load one sheet of paper at a time if the paper does not feed correctly or if the printout has uneven colors or smears.

Various other paper types

Media Name	Size	Loading Capacity (Sheets)
Epson Photo Quality Self Adhesive Sheets	A4	1

Commercially Available Paper

Note:
See the following for information on available paper types for borderless and 2-sided printing.

"Paper for Borderless Printing" on page 246

"Paper for 2-Sided Printing" on page 247

Plain papers

Plain paper includes copy paper.

Size	Loading Capacity (Sheets)
Letter, A4, B5, A5, A6, B6, 16K (195×270 mm)	Up to the line indicated by the triangle symbol on the edge guide.*1
Legal, 8.5×13 in., Indian-Legal	1
User Defined*2(mm) 54x86 to 215.9x1200	1

*1 Load one sheet of paper at a time if the paper does not feed correctly or if the printout has uneven colors or smears.

*2 Only printing from computer is available.

Envelope

Size	Loading Capacity (Envelopes)
Envelope #10, Envelope DL, Envelope C6	10

Paper for Borderless Printing

Genuine Epson Paper

❏ Epson Ultra Glossy Photo Paper (10x15 cm (4x6 in.))

- ❏ Epson Premium Glossy Photo Paper (10x15 cm (4x6 in.), 16:9 wide size(102x181 mm))
- ❏ Epson Premium Semigloss Photo Paper (10x15 cm (4x6 in.))
- ❏ Epson Photo Paper Glossy (10x15 cm (4x6 in.))
- ❏ Epson Value Glossy Photo Paper (10x15 cm (4x6 in.))

Related Information

➡ "Available Paper and Capacities" on page 245

Paper for 2-Sided Printing

Genuine Epson Paper

- ❏ Epson Bright White Ink Jet Paper
- ❏ Epson Double-sided Photo Quality Ink Jet Paper
- ❏ Epson Double-Sided Matte Paper

Related Information

➡ "Available Paper and Capacities" on page 245

Commercially Available Paper

- ❏ Plain paper, Copy paper

Related Information

➡ "Available Paper and Capacities" on page 245

Unavailable Paper Types

Do not use the following papers. Using these types of paper causes paper jams and smears on the printout.

- ❏ Papers that are wavy
- ❏ Papers that are torn or cut
- ❏ Papers that are folded
- ❏ Papers that are damp
- ❏ Papers that are too thick or too thin
- ❏ Papers that have stickers

Do not use the following envelopes. Using these types of envelope causes paper jams and smears on the printout.

- ❏ Envelopes that are curled or folded
- ❏ Envelopes with adhesive surfaces on the flaps or window envelopes
- ❏ Envelopes that are too thin
  They may curl during printing.

Consumable Products Information

Ink Bottle Codes

Epson recommends the use of genuine Epson ink bottles.

The following are the codes for genuine Epson ink bottles.

Important:

- *Epson warranty does not cover damage caused by inks other than those specified, including any genuine Epson ink not designed for this printer or any third party ink.*
- *Other products not manufactured by Epson may cause damage that is not covered by Epson's warranties, and under certain circumstances, may cause erratic printer behavior.*

Note:

- *Ink bottle codes may vary by location. For the correct codes in your area, contact Epson support.*
- *Although the ink bottles may contain recycled materials, this does not affect printer function or performance.*
- *Specifications and appearance of the ink bottle are subject to change without prior notice for improvement.*

For Europe

Product	BK: Black	C: Cyan	M: Magenta	Y: Yellow
ET-4800 Series/ ET-2820 Series	104	104	104	104
ET-2870/ ET-2871/ ET-2875/ ET-2876				
ET-2870U	122	122	122	122
L5290 Series/L3280 Series/ L3260 Series	103	103	103	103

Note:
Visit the following website for information on Epson's ink bottle yields.

http://www.epson.eu/pageyield

For Australia and New Zealand

BK: Black	C: Cyan	M: Magenta	Y: Yellow
522	522	522	522

For Asia

BK: Black	C: Cyan	M: Magenta	Y: Yellow
003	003	003	003

Software Information

This section introduces the network services and software products available for your printer from the Epson website.

Software for Printing

Application for Printing from a Computer (Windows Printer Driver)

The printer driver controls the printer according to the commands from an application. Making settings on the printer driver provides the best printing results. You can also check the status of the printer or keep it in top operating condition using the printer driver utility.

Note:
You can change the language of the printer driver. Select the language you want to use from the ***Language*** *setting on the* ***Maintenance*** *tab.*

Accessing the printer driver from applications

To make settings that apply only to the application you are using, access from that application.

Select **Print** or **Print Setup** from the **File** menu. Select your printer, and then click **Preferences** or **Properties**.

Note:
Operations differ depending on the application. See the application's help for details.

Accessing the printer driver from the control panel

To make settings that apply to all of the applications, access from the control panel.

❏ Windows 10/Windows Server 2019/Windows Server 2016

Click on the start button, and then select **Windows System** > **Control Panel** > **View devices and printers** in **Hardware and Sound**. Right-click on your printer, or press and hold it and then select **Printing preferences**

❏ Windows 8.1/Windows 8/Windows Server 2012 R2/Windows Server 2012

Select **Desktop** > **Settings** > **Control Panel** > **View devices and printers** in **Hardware and Sound**. Right-click on your printer, or press and hold it and then select **Printing preferences**

❏ Windows 7/Windows Server 2008 R2

Click the start button, and select **Control Panel** > **View devices and printers** in **Hardware and Sound**. Right-click on your printer and select **Printing preferences**.

❏ Windows Vista/Windows Server 2008

Click the start button, and select **Control Panel** > **Printers** in **Hardware and Sound**. Right-click on your printer and select **Printing preferences**.

❏ Windows XP/Windows Server 2003 R2/Windows Server 2003

Click the start button, and select **Control Panel** > **Printers and Other Hardware** > **Printers and Faxes**. Right-click on your printer and select **Printing preferences**.

Accessing the printer driver from the printer icon on the task bar

The printer icon on the desktop task bar is a shortcut icon allowing you to quickly access the printer driver.

If you click the printer icon and select **Printer Settings**, you can access the same printer settings window as the one displayed from the control panel. If you double-click this icon, you can check the status of the printer.

Note:
*If the printer icon is not displayed on the task bar, access the printer driver window, click **Monitoring Preferences** on the **Maintenance** tab, and then select **Register the shortcut icon to the taskbar**.*

Starting the utility

Access the printer driver window. Click the **Maintenance** tab.

Making Operation Settings for the Windows Printer Driver

You can make settings such as enabling **EPSON Status Monitor 3**.

1. Access the printer driver window.
2. Click **Extended Settings** on the **Maintenance** tab.
3. Make the appropriate settings, and then click **OK**.

   See the online help for explanations of the setting items.

Related Information

➡ "Application for Printing from a Computer (Windows Printer Driver)" on page 249

Application for Printing from a Computer (Mac OS Printer Driver)

The printer driver controls the printer according to the commands from an application. Making settings on the printer driver provides the best printing results. You can also check the status of the printer or keep it in top operating condition using the printer driver utility.

Accessing the printer driver from applications

Click **Page Setup** or **Print** on the **File** menu of your application. If necessary, click **Show Details** (or ▼) to expand the print window.

Note:
*Depending on the application being used, **Page Setup** may not be displayed in the **File** menu, and the operations for displaying the print screen may differ.See the application's help for details.*

Starting the utility

Select **System Preferences** from the Apple menu > **Printers & Scanners** (or **Print & Scan**, **Print & Fax**), and then select the printer. Click **Options & Supplies** > **Utility** > **Open Printer Utility**.

Guide to Mac OS Printer Driver

Epson Printer Utility

You can run a maintenance feature such as nozzle check and print head cleaning, and by starting **EPSON Status Monitor**, you can check printer status and error information.

Accessing the Operation Settings Window of the Mac OS Printer Driver

Select **System Preferences** from the Apple menu > **Printers & Scanners** (or **Print & Scan**, **Print & Fax**), and then select the printer. Click **Options & Supplies** > **Options** (or **Driver**).

Application for Quick and Fun Printing from a Computer (Epson Photo+)

Epson Photo+ is an application that allows you to easily print images with a variety of layouts. You can also perform image correction and adjust the position while viewing a preview of your document. You can also brighten up your images by adding text and stamps wherever you like. When printing on genuine Epson photo paper, the ink performance is maximized creating a beautiful finish with excellent coloring.

See the application's help for details.

Note:

- ❏ *Windows Server operating systems are not supported.*
- ❏ *To use this application the printer driver for this printer must be installed.*

Starting on Windows

- ❏ Windows 10

  Click the start button, and then select **Epson Software** > **Epson Photo+**.

- ❏ Windows 8.1/Windows 8

  Enter the application name in the search charm, and then select the displayed icon.

❏ Windows 7/Windows Vista/Windows XP

Click the start button, and select **All Programs** or **Programs** > **Epson Software** > **Epson Photo+**.

Starting on Mac OS

Select **Go** > **Applications** > **Epson Software** > **Epson Photo+**.

Related Information

➡ "Installing the Applications Separately" on page 129

Application for Easily Operating the Printer from a Smart device (Epson Smart Panel)

Epson Smart Panel is an application that allows you to perform printer operations easily including printing, copying, or scanning from a smart device such as a smartphone or tablet. You can connect the printer and smart device over a wireless network, check the ink levels and printer status, and check for solutions if an error occurs. You can also copy easily by registering a copy favorite.

Search for and install Epson Smart Panel from App Store or Google Play.

Application for Printing Easily from an Android Application (Epson Print Enabler)

Epson Print Enabler is an application that allows you to wirelessly print your documents, emails, photos, and web pages right from your Android phone or tablet (Android v4.4 or later). With a few taps, your Android device will discover an Epson printer that is connected to the same wireless network.

Search for and install Epson Print Enabler from Google Play.

Software for Scanning

Application for Scanning from a Computer (Epson ScanSmart)

This application allows you to scan documents and photos easily, and then save the scanned images in simple steps.

See the Epson ScanSmart help for details on using the features.

Starting on Windows

❏ Windows 10

Click the start button, and then select **Epson Software** > **Epson ScanSmart**.

❏ Windows 8.1/Windows 8

Enter the application name in the search charm, and then select the displayed icon.

❏ Windows 7

Click the start button, and then select **All Programs** > **Epson Software** > **Epson ScanSmart**.

Starting on Mac OS

Select **Go** > **Applications** > **Epson Software** > **Epson ScanSmart**.

Software for Faxing

Application for Configuring Fax Operations and Sending Faxes (FAX Utility)

FAX Utility is an application that allows you to configure various settings for sending faxes from a computer. You can create or edit the contacts list to be used when sending a fax, configure to save received faxes in PDF format on the computer, and so on. See the application's help for details.

Note:

❏ *Windows Server operating systems are not supported.*

❏ *Make sure you have installed the printer driver before installing FAX Utility.*

❏ *Make sure the FAX Utility has been installed. See "Starting on Windows" or "Starting on Mac OS" below to check if the application has been installed.*

Starting on Windows

❏ Windows 10

Click the start button, and select **Epson Software** > **FAX Utility**.

❏ Windows 8.1/Windows 8

Enter the application name in the search charm, and then select the displayed icon.

❏ Windows 7/Windows Vista/Windows XP

Click the start button, and select **All Programs** (or **Programs**) > **Epson Software** > **FAX Utility**.

Starting on Mac OS

Select **System Preferences** from the Apple menu > **Printers & Scanners** (or **Print & Scan**, **Print & Fax**), and then select the printer (FAX). Click **Options & Supplies** > **Utility** > **Open Printer Utility**.

Related Information

➡ "Sending Faxes Using the Printer" on page 101

➡ "Receiving Faxes on a Computer" on page 115

Application for Sending Faxes (PC-FAX Driver)

PC-FAX driver is an application that allows you to send a document created on a separate application as a fax directly from the computer. PC-FAX driver is installed when you install FAX Utility. See the application's help for details.

Note:
- *Windows Server operating systems are not supported.*
- *Check if PC-FAX driver has been installed. See "Accessing from Windows" or "Accessing from Mac OS" below.*
- *The operation differs depending on the application you used to create the document. See the application's help for details.*

Accessing from Windows

In the application, select **Print** or **Print Setup** from the **File** menu. Select your printer (FAX), and then click **Preferences** or **Properties**.

Accessing from Mac OS

In the application, select **Print** from the **File** menu. Select your printer (FAX) as the **Printer** setting, and then select **Fax Settings** or **Recipient Settings** from the pop-up menu.

Related Information

➡ "Sending Faxes Using the Printer" on page 101

Software for Package Creation

Application for Creating Driver Packages (EpsonNet SetupManager)

EpsonNet SetupManager is a software to create a package for a simple printer installation, such as installing the printer driver, installing EPSON Status Monitor and creating a printer port. This software allows the administrator to create unique software packages and distribute them among groups.

For more information, visit your regional Epson website.

http://www.epson.com

Software for Making Settings

Application for Configuring Printer Operations (Web Config)

Web Config is an application that runs in a web browser, such as Microsoft Edge and Safari, on a computer or smart device. You can confirm the printer status or change the network service and printer settings. To use the Web Config, connect the printer and the computer or device to the same network.

The following browsers are supported. Use the latest version.

Microsoft Edge, Internet Explorer, Firefox, Chrome, Safari

Note:
You may be asked to enter the administrator password while operating Web Config. See the related information below for more details.

Related Information

➡ "Default Value of the Administrator Password" on page 15

Running Web Config on a Web Browser

1. Check the printer's IP address.

   Select the network icon on the printer's home screen, and then select the active connection method to confirm the printer's IP address.

   Note:
   You can also check the IP address by printing the network connection report.

2. Launch a Web browser from a computer or smart device, and then enter the printer's IP address.

   Format:

   IPv4: http://the printer's IP address/

   IPv6: http://[the printer's IP address]/

   Examples:

   IPv4: http://192.168.100.201/

   IPv6: http://[2001:db8::1000:1]/

   Note:
   Using the smart device, you can also run Web Config from the product information screen of the Epson Smart Panel.

   Since the printer uses a self-signed certificate when accessing HTTPS, a warning is displayed on the browser when you start Web Config; this does not indicate a problem and can be safely ignored.

Related Information

➡ "Message on the Network Environment" on page 242

Running Web Config on Windows

When connecting a computer to the printer using WSD, follow the steps below to run Web Config.

1. Open the printer list on the computer.

   ❑ Windows 10

   Click on the start button, and then select **Windows System** > **Control Panel** > **View devices and printers** in **Hardware and Sound**.

   ❑ Windows 8.1/Windows 8

   Select **Desktop** > **Settings** > **Control Panel** > **View devices and printers** in **Hardware and Sound** (or **Hardware**).

   ❑ Windows 7

   Click the start button, and select **Control Panel** > **View devices and printers** in **Hardware and Sound**.

   ❑ Windows Vista

   Click the start button, and select **Control Panel** > **Printers** in **Hardware and Sound**.

2. Right-click on your printer and select **Properties**.

3. Select the **Web Service** tab and click the URL.

   Since the printer uses a self-signed certificate when accessing HTTPS, a warning is displayed on the browser when you start Web Config; this does not indicate a problem and can be safely ignored.

Running Web Config on Mac OS

1. Select **System Preferences** from the Apple menu > **Printers & Scanners** (or **Print & Scan**, **Print & Fax**), and then select the printer.

2. Click **Options & Supplies**> **Show Printer Webpage**.

   Since the printer uses a self-signed certificate when accessing HTTPS, a warning is displayed on the browser when you start Web Config; this does not indicate a problem and can be safely ignored.

Application for Setting up the Device on a Network (EpsonNet Config)

EpsonNet Config is an application that allows you to set the network interface addresses and protocols. See the operations guide for EpsonNet Config or the application's help for more details.

Starting on Windows

❏ Windows 10/Windows Server 2019/Windows Server 2016

Click the start button, and then select **EpsonNet** > **EpsonNet Config**.

❏ Windows 8.1/Windows 8/Windows Server 2012 R2/Windows Server 2012

Enter the application name in the search charm, and then select the displayed icon.

❏ Windows 7/Windows Vista/Windows XP/Windows Server 2008 R2/Windows Server 2008/Windows Server 2003 R2/Windows Server 2003

Click the start button, and select **All Programs** or **Programs** > **EpsonNet** > **EpsonNet Config SE** > **EpsonNet Config**.

Starting on Mac OS

Go > **Applications** > **Epson Software** > **EpsonNet** > **EpsonNet Config SE** > **EpsonNet Config**.

Related Information

➡ "Installing the Applications Separately" on page 129

Software for Updating

Application for Updating Software and Firmware (Epson Software Updater)

Epson Software Updater is an application that installs new software, and updates firmware over the Internet. If you want to check for update information regularly, you can set the interval for checking for updates in Epson Software Updater's Auto Update Settings.

Note:
Windows Server operating systems are not supported.

Starting on Windows

❏ Windows 10

Click the start button, and then select **EPSON Software** > **Epson Software Updater**.

❏ Windows 8.1/Windows 8

Enter the application name in the search charm, and then select the displayed icon.

❏ Windows 7/Windows Vista/Windows XP

Click the start button, and then select **All Programs** (or **Programs**) > **EPSON Software** > **Epson Software Updater**.

Note:
You can also start Epson Software Updater by clicking the printer icon on the task bar on the desktop, and then selecting ***Software Update****.*

Starting on Mac OS

Select **Go** > **Applications** > **Epson Software** > **Epson Software Updater**.

Related Information

➡ "Installing the Applications Separately" on page 129

Settings Menu List

Select **Settings** on the home screen of the printer to make various settings.

Maintenance

Select the menus on the control panel as described below.

Settings > **Maintenance**

Nozzle Check:

Select this feature to check if the print head nozzles are clogged. The printer prints a nozzle check pattern.

Head Cleaning:

Select this feature to clean clogged nozzles in the print head.

Power Cleaning:

Select this feature to replace all of the ink inside the ink tubes. More ink is consumed than in usual cleaning. See the "Related Information" below for details on using this feature.

Print Head Alignment:

Select this feature to adjust the print head to improve print quality.

❏ Vertical Alignment

Select this feature if your printouts look blurry or text and lines are misaligned.

❏ Horizontal Alignment

Select this feature if horizontal banding appears at regular intervals in your printouts.

Fill Ink:

Select this feature to reset the ink level to 100% when filling the ink tank.

Set Ink Level:

Select this feature to set the ink level according to the actual ink remaining.

Paper Guide Cleaning:

Select this feature if there are ink stains on the internal rollers. The printer feeds paper to clean the internal rollers.

Related Information

➡ "Checking and Cleaning the Print Head" on page 120
➡ "Running Power Cleaning" on page 122
➡ "Refilling the Ink Tanks" on page 197
➡ "Cleaning the Paper Path for Ink Smears" on page 124

Printer Setup

Select the menus on the control panel as described below.

Settings > **Printer Setup**

Before Using Basic Settings

In this menu group, the following items are only for ET-4800 Series/L5290 Series.

- ❏ Sound
- ❏ Date/Time Settings
- ❏ Country/Region

Paper Source Settings:

Paper Setting:

Select the paper size and paper type you loaded in the paper source.

A4/Letter Auto Switching:

Select **On** to feed paper from the paper source set as A4 size when there is no paper source set as Letter, or feed from the paper source set as Letter size when there is no paper source set as A4.

Error Notice:

Select **On** to display an error message when the selected paper size or type does not match the loaded paper.

Paper Setup Auto Display:

Select **On** to display the **Paper Setting** screen when loading paper in the paper source. If you disable this feature, you cannot print from an iPhone or iPad using AirPrint.

Sound:

Adjust the volume.

❏ Mute

Select **On** to mute all sound.

❏ Normal Mode

Select the volume such as **Button Press**.

❏ Quiet Mode

Select the volume such as **Button Press** in **Quiet Mode**.

Quiet Mode:

Select **On** to reduce noise during printing, however, this may lower the print speed. Depending on the paper type and print quality settings you selected, there may be no difference in the printer's noise level.

Power Off Timer:

Your product may have this feature or the **Power Off Settings** feature depending on the location of purchase.

Select this setting to turn the printer off automatically when it is not used for a specified period of time. You can adjust the time before power management is applied. Any increase will affect the product's energy efficiency. Please consider the environment before making any change.

Power Off Settings:

Your product may have this feature or the **Power Off Timer** feature depending on the location of purchase.

❏ Power Off If Inactive

Select this setting to turn the printer off automatically if it is not used for a specified period of time. Any increase will affect the product's energy efficiency. Please consider the environment before making any change.

❏ Power Off If Disconnected

Select this setting to turn the printer off after a specified period of time when all ports including the LINE port are disconnected. This feature may not be available depending on your region.

See the following website for the specified period of time.

https://www.epson.eu/energy-consumption

Date/Time Settings:

❏ Date/Time

Enter the current date and time.

❏ Daylight Saving Time

Select the summer time setting that applies to your area.

❏ Time Difference

Enter the time difference between your local time and UTC (Coordinated Universal Time).

Country/Region:

Select the country or region in which you are using your printer. If you change the country or region, your fax settings return to their defaults and you must select them again.

Language:

Select the language used on the LCD screen.

Keyboard

Change the layout of the keyboard on the LCD screen.

Sleep Timer:

Adjust the time period to enter a sleep mode (energy saving mode) when the printer has not performed any operations. The LCD screen turns black when the setting time passes.

PC Connection via USB:

Select **Enable** to allow a computer to access the printer when connected by USB. When **Disable** is selected, printing and scanning that is not sent over a network connection is restricted.

Network Settings

Select the menus on the control panel as described below.

Settings > **Network Settings**

Print Status Sheet:

Prints a network status sheet.

Wi-Fi Setup:

Set up or change wireless network settings. Choose the connection method from following and then follow the instructions on the control panel.

Wi-Fi (Recommended):

- ❏ Wi-Fi Setup Wizard
- ❏ Push Button (WPS)
- ❏ Others
  - ❏ PIN Code (WPS)
  - ❏ Wi-Fi Auto Connect
  - ❏ Disable Wi-Fi

    You may be able to resolve network problems by disabling the Wi-Fi settings or making the Wi-Fi settings again. Select **Wi-Fi Setup** > **Wi-Fi (Recommended)** > OK > **Others** > **Disable Wi-Fi** > OK.

Wi-Fi Direct:

- ❏ iOS
- ❏ Other OS Devices

❏ Modify

❏ Change Network Name

❏ Change Password

❏ Disable Wi-Fi Direct

❏ Restore Default Settings

Connection Check:

Checks the current network connection and prints a report. If there are any problems with the connection, see the report to solve the problem.

Related Information

➡ "Making Wi-Fi Settings from the Control Panel" on page 228

➡ "Connecting a Smart Device and Printer Directly (Wi-Fi Direct)" on page 231

➡ "Checking the Network Connection Status" on page 235

Epson Connect Services

Select the menus on the control panel as described below.

Settings > **Epson Connect Services**

Register/Delete:

Register or delete the printer to or from the Epson Connect services.

For usage guides, see the following portal website.

https://www.epsonconnect.com/

http://www.epsonconnect.eu (Europe only)

Suspend/Resume:

Select whether to suspend or resume Epson Connect services.

Email Address:

Check the printer's email address that is registered to the Epson Connect services.

Status:

Check whether or not the printer is registered and connected to the Epson Connect services.

Contacts Manager

This menu is only available for ET-4800 Series/L5290 Series.

Select the menus on the control panel as described below.

Settings > **Contacts Manager**

Add Entry:

Register the entry to be used for faxes in contacts.

Add Group:

Register the entry for group faxes in contacts.

Edit:

Edit the entries and groups registered in contacts.

Delete:

Delete the entry or group registered in contacts.

Print Contacts:

Print the entry information and group information for the contacts in the list.

Fax Settings

Faxing feature is available only for ET-4800 Series/L5290 Series.

Related Information

➡ "Check Fax Connection" on page 262
➡ "Fax Setting Wizard" on page 262
➡ "Basic Settings Menu" on page 263
➡ "Receive Settings Menu" on page 264
➡ "Report Settings Menu" on page 266
➡ "Security Settings Menu" on page 266
➡ "User Default Settings Menu" on page 267

Check Fax Connection

You can find the menu on the printer's control panel below:

Settings > **Fax Settings** > **Check Fax Connection**

Selecting **Check Fax Connection** checks that the printer is connected to the phone line and ready for fax transmission. You can print the check result on A4 size plain paper.

Fax Setting Wizard

You can find the menu on the printer's control panel below:

Settings > **Fax Settings** > **Fax Setting Wizard**

Selecting **Fax Setting Wizard** makes basic fax settings. Follow the on-screen instructions.

Related Information

➡ "Basic Settings Menu" on page 263

➡ "Making the Printer Ready to Send and Receive Faxes" on page 92

Basic Settings Menu

You can find the menu on the printer's control panel below:

Settings > **Fax Settings** > **Basic Settings**

Fax Speed:

Select the fax transmission speed. We recommend selecting **Slow(9,600bps)** when a communication error occurs frequently, when sending/receiving a fax to/from abroad, or when you are using an IP (VoIP) phone service.

ECM:

Automatically corrects errors in the fax transmission (Error Correction Mode), mostly caused by telephone line noise. If this is disabled, you cannot send or receive documents in color.

Dial Tone Detection:

Detects a dial tone before starting to dial. If the printer is connected to a PBX (Private Branch Exchange) or digital phone line, the printer may fail to start dialing. In this situation, change the **Line Type** setting to **PBX**. If this does not work, disable this feature. However, disabling this feature may drop the first digit of a fax number and send the fax to the wrong number.

Dial Mode:

Select the type of phone system to which you have connected the printer. When set to **Pulse**, you can temporarily switch the dialing mode from pulse to tone by pressing * ("T" is entered) while entering numbers on the fax top screen. This setting may not be displayed depending on your region or country.

Line Type:

Select the line type to which you have connected the printer.

When using the printer in an environment that uses extensions and requires an external access code, such as 0 and 9, to get an outside line, select **PBX**. For an environment that uses a DSL modem or terminal adapter, setting to **PBX** is also recommended.

Access Code

Select **Use**, and then register an external access code such as 0 or 9. Then, when sending a fax to an outside fax number, enter # (hash) instead of the real code. # (hash) must also be used in **Contacts** as an external access code. If an external access code such as 0 or 9 is set in a contact, you cannot send faxes to the contact. In this case, set **Access Code** to **Do Not Use**, otherwise you must change the code in **Contacts** to #.

Header:

Enter your sender name and fax number. These appear as a header on outgoing faxes.

- ❏ Your Phone Number: You can enter up to 20 characters using 0-9 + or space.
- ❏ Fax Header: You can register up to 21 sender names as necessary. You can enter up to 40 characters for each sender name.

Receive Mode:

Select the receive mode. For details, see the related Information below.

DRD:

If you have subscribed to a distinctive ring service from your telephone company, select the ring pattern to be used for incoming faxes. The distinctive ring service, offered by many telephone companies (the service name differs by company), allows you to have several phone numbers on one phone line. Each number is assigned different ring pattern. You can use one number for voice calls and another for fax calls. Depending on the region, this option may be **On** or **Off**.

Rings to Answer:

Select the number of rings that must occur before the printer automatically receives a fax.

Remote Receive:

Remote Receive

When you answer an incoming fax call on a phone connected to the printer, you can start receiving the fax by entering the code using the phone.

Enter Start Code

Set the start code of **Remote Receive**. Enter two characters using 0-9, *, #.

Rejection Fax:

Rejection Fax

Select options to reject receiving junk faxes.

- ❏ Rejection Number List: If the other party's phone number is in the rejection number list, set whether to reject the incoming faxes.
- ❏ Fax Header Blank: If the other party's phone number is blocked, set whether to reject receiving the faxes.
- ❏ Caller not in Contacts: If the other party's phone number is not in the contacts, set whether to reject receiving the faxes.

Edit Blocked Number list

You can register up to 30 fax numbers to reject the faxes and calls. Enter up to 20 characters using 0-9, *, #, or space.

Related Information

➡ "Making the Printer Ready to Send and Receive Faxes" on page 92
➡ "Making Settings for a PBX Phone System" on page 94
➡ "Receiving Incoming Faxes" on page 105
➡ "Making Settings for Blocking Junk Faxes" on page 95

Receive Settings Menu

You can find the menu on the printer's control panel below:

Settings > **Fax Settings** > **Receive Settings**

Save to Computer:

Saves received faxes as PDF files on a computer connected to the printer. You can only set this to **Yes** by using the FAX Utility (application). You cannot enable this from printer's control panel. Install the FAX Utility on the computer in advance. After setting this to **Yes**, you can change this to **Yes and Print** from the printer's control panel.

Auto Reduction:

Prints received faxes with large-size documents reduced to fit on the paper in the paper source. Reducing may not always be possible depending on the received data. If this is turned off, large documents are printed at their original size on multiple sheets, or a blank second page may be ejected.

Split Page Settings:

Prints received faxes with the page split when the size of the received documents is larger than the size of the paper loaded in the printer.

Auto Rotation:

Rotates faxes received as landscape-oriented A5 size documents so that they are printed on A5 size paper. This setting is applied when the paper size setting for at least one paper source used for printing faxes is set to A5.

By selecting **Off**, faxes received as landscape-oriented A5 size, which are the same width as A4 portrait documents, are assumed to be A4 size faxes and printed as such.

Check the paper size setting in **Settings** > **Printer Setup** > **Paper Source Settings**.

Add Reception Information:

Prints reception information on the received fax, even if the sender does not set the header information. The reception information includes the received date and time, sender's ID, and page number (such as "P1"). When **Split Page Settings** is enabled, the split page number is also included.

Print Start Timing:

Select options to start printing the faxes to receive.

- All Pages Received: Printing starts after receiving all of the pages. To start printing from the first page or last page depends on the setting of **Collation Stack** feature. See the explanation for **Collation Stack**.
- First Page Received: Starts printing when the first page is received, and then prints in order as the pages are received. If the printer cannot start printing, such as when it is printing other jobs, the printer starts printing received pages as a batch when it is available.

Collation Stack:

Since the first page is printed last (output to the top), the printed documents are stacked in the correct page order. When the printer is running low on memory, this feature may not be available.

Print Suspend Time:

During the time period you specified from **Stop** through **Restart** you specified, the printer saves documents received in the printer's memory without printing them. This feature can be used for noise prevention at night or to prevent confidential documents from being disclosed while you are away. Before using this feature, make sure there is enough free memory. When you set this to **Off**, you can print the received documents even before the restart time.

Quiet Mode:

Reduces the noise the printer makes when printing faxes, however, print speed may be reduced.

Report Settings Menu

You can find the menu on the printer's control panel below:

Settings > **Fax Settings** > **Report Settings**

Fax Log Auto Print:

Prints the fax log automatically. Select **On(Every 30)** to print a log every time 30 fax jobs are completed. Select **On(Time)** to print the log at a specified time. However, if the number of fax jobs exceeds 30, the log is printed before the specified time.

Attach Fax image to report:

Prints a **Transmission Report** with an image of the first page of the sent document. Select **On(Large Image)** to print the upper part of the page without reducing. Select **On(Small Image)** to print the entire page reducing it to fit onto the report.

Report Format:

Selects a format for fax reports in **Fax** > **More** tab > **Fax Report** other than **Protocol Trace**. Select **Detail** to print with error codes.

Security Settings Menu

You can find the menu on the printer's control panel below:

Settings > **Fax Settings** > **Security Settings**

Direct Dialing Restrictions:

Selecting **On** disables manual entry of the recipient's fax numbers allowing the operator to select recipients only from the contacts list or sent history.

Selecting **Enter Twice** requires the operator to enter the fax number again when the number was manually entered.

Selecting **Off** enables manual entry of the recipient's fax numbers.

Broadcasting Restrictions:

Selecting **On** allows only one fax number to be entered as the Recipient.

Confirm Address List:

Displays a recipient confirmation screen before starting the transmission.

You can select the recipients from **All** or **Only for Broadcasting**.

Backup Data Auto Clear:

Backup copies of sent and received documents are usually temporarily stored in the printer's memory to prepare for an unexpected power failure due to an electricity failure or incorrect operations.

Selecting **On** automatically erases the backups when sending or receiving a document completes successfully and the backups become unnecessary.

Clear Backup Data:

Erases all backup copies temporarily stored in the printer's memory. Run this before you give the printer to someone else or dispose of it.

User Default Settings Menu

You can find the menu on the printer's control panel below:

Settings > **Fax Settings** > **User Default Settings**

The settings made in this menu become your default settings for in the **Fax** > **Menu**. For details, see the related information below.

Related Information

➡ "Scan Settings" on page 108
➡ "Fax Send Settings" on page 109

Print Status Sheet

Select the menus on the control panel as described below.

Settings > **Print Status Sheet**

Configuration Status Sheet:

Print information sheets showing the current printer status and settings.

Supply Status Sheet:

Print information sheets showing the status of consumables.

Usage History Sheet:

Print information sheets showing the usage history of the printer.

Print Counter

Select the menus on the control panel as described below.

Settings > **Print Counter**

Displays the total number of prints, B&W prints, color prints, and the total number of pages fed through the printer including items such as the status sheet, from the time you purchased the printer.

Customer Research

Select the menus on the control panel as described below.

Settings > **Customer Research**

Select **Approve** to provide product usage information such as the number of prints to Seiko Epson Corporation.

Select **Modify** to change this setting.

Restore Default Settings

Select the menus on the control panel as described below.

Settings > **Restore Default Settings**

Resets the following menus to their defaults.

❏ Network Settings

❏ Copy Settings

❏ Scan Settings

❏ Fax Settings

❏ Clear All Data and Settings

Firmware Update

Select the menus on the control panel as described below.

Settings > **Firmware Update**

Update:

Check if the latest version of the firmware has been uploaded to the network server. The firmware is updated when new firmware is found. Once the update has started, it cannot be interrupted.

Current Version:

Displays the current firmware version of your printer.

Notification:

Select **On** to receive a notification if a firmware update is available.

Product Specifications

Printer Specifications

Print Head Nozzle Placement		Black ink nozzles: 180 Color ink nozzles: 59 for each color
Weight of Paper*	Plain Paper	64 to 90 g/m^2(17 to 24lb)
	Envelopes	Envelope #10, DL, C6: 75 to 100 g/m^2 (20 to 27 lb)

* Even when the paper thickness is within this range, the paper may not feed in the printer or the print quality may decline depending on the paper properties or quality.

Printable Area

Printable Area for Single Sheets

Print quality may decline in the shaded areas due to the printer's mechanism.

Printing with borders

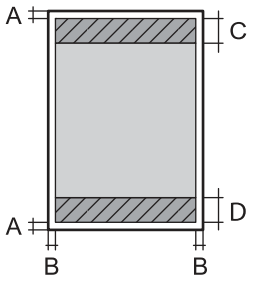	A	3.0 mm (0.12 in.)
	B	3.0 mm (0.12 in.)
	C	41.0 mm (1.61 in.)
	D	37.0 mm (1.46 in.)

Borderless printing

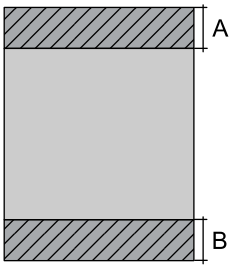	A	44.0 mm (1.73 in.)
	B	40.0 mm (1.57 in.)

Printable Area for Envelopes

Print quality may decline in the shaded areas due to the printer's mechanism.

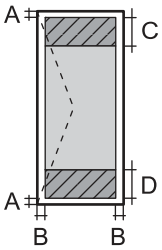	A	3.0 mm (0.12 in.)
	B	3.0 mm (0.12 in.)
	C	18.0 mm (0.71 in.)
	D	41.0 mm (1.61 in.)

Scanner Specifications

Scanner Type	Flatbed
Photoelectric Device	CIS
Effective Pixels	10200×14040 pixels (1200 dpi)
Maximum Document Size	216×297 mm (8.5×11.7 in.) A4, Letter

Scanning Resolution	1200 dpi (main scan) 2400 dpi (sub scan)
Output Resolution	50 to 9600 dpi in 1 dpi increments
Color Depth	Color ❏ 48 bits per pixel internal (16 bits per pixel per color internal) ❏ 24 bits per pixel external (8 bits per pixel per color external) Grayscale ❏ 16 bits per pixel internal ❏ 8 bits per pixel external Black and white ❏ 16 bits per pixel internal ❏ 1 bits per pixel external
Light Source	LED

Interface Specifications

For Computer	Hi-Speed USB*

* USB 3.0 cables are not supported.

ADF Specifications

ET-4800 Series/L5290 Series Only

Available Paper Sizes	A4, Letter, Legal, 8.5×13in, Indian-Legal
Paper Type	Plain Paper
Weight of Paper	64 to 95 g/m²
Loading Capacity	A4, Letter: 30 sheets or 3.3 mm Legal, 8.5×13in, Indian-Legal: 10 sheets
Auto duplex scanning	Not supported

Even when the original meets the specifications for media that can be placed in the ADF, it may not feed from the ADF or the scan quality may decline depending on the paper properties or quality.

Fax Specifications

ET-4800 Series/L5290 Series Only

Fax Type	Walk-up black and white and color fax capability (ITU-T Super Group 3)

Supported Lines	Standard analogue telephone lines, PBX (Private Branch Exchange) telephone systems
Speed	Up to 33.6 kbps
Resolution	Monochrome ❏ Standard: 8 pel/mm×3.85 line/mm (203 pel/in.×98 line/in.) ❏ Fine: 8 pel/mm×7.7 line/mm (203 pel/in.×196 line/in.) ❏ Photo: 8 pel/mm×7.7 line/mm (203 pel/in.×196 line/in.) Color 200×200 dpi
Page Memory	Up to 100 pages (when received ITU-T No.1 chart in monochrome draft mode)
Redial*	2 times (with 1 minute intervals)
Interface	RJ-11 Phone Line, RJ-11 Telephone set connection

* The specifications may differ by country or region.

Network Specifications

Wi-Fi Specifications

Standards	IEEE802.11b/g/n*1
Frequency Range	2.4 GHz
Coordination Modes	Infrastructure, Wi-Fi Direct (Simple AP)*2*3
Wireless Securities*4	WEP (64/128bit), WPA2-PSK (AES)*5, WPA3-SAE (AES)

*1 IEEE802.11n is only available for the HT20.

*2 Not supported for IEEE 802.11b.

*3 Simple AP mode is compatible with a Wi-Fi connection (infrastructure) or an Ethernet connection.

*4 Wi-Fi Direct supports WPA2-PSK (AES) only.

*5 Complies with WPA2 standards with support for WPA/WPA2 Personal.

Ethernet Specifications

ET-4800 Series/L5290 Series Only

Standards	IEEE802.3i (10BASE-T)*1 IEEE802.3u (100BASE-TX) IEEE802.3az (Energy Efficient Ethernet)*2*3

Communication Mode	Auto, 10Mbps Full duplex, 10Mbps Half duplex, 100Mbps Full duplex, 100Mbps Half duplex
Connector	RJ-45

*1 Use a category 5e or higher STP (Shielded twisted pair) cable to prevent risk of radio interference.

*2 The connected device should comply with IEEE802.3az standards.

*3 IEEE802.3az is disabled by default. See "Related Information" to enable this setting.

Related Information

➡ "Enabling Energy Efficient Ethernet" on page 227

Network Functions and IPv4/IPv6

Functions			Supported	Remarks
Network Printing	EpsonNet Print (Windows)	IPv4	✓	-
	Standard TCP/IP (Windows)	IPv4, IPv6	✓	-
	WSD Printing (Windows)	IPv4, IPv6	✓	Windows Vista or later
	Bonjour Printing (Mac OS)	IPv4, IPv6	✓	-
	IPP Printing (Windows, Mac OS)	IPv4, IPv6	✓	-
	PictBridge Printing (Wi-Fi)	IPv4	-	Digital camera
	Epson Connect (Email Print, Remote Print)	IPv4	✓	-
	AirPrint (iOS, Mac OS)	IPv4, IPv6	✓	iOS 5 or later, Mac OS X v10.7 or later
Network Scanning	Epson Scan 2	IPv4, IPv6	✓	-
	Epson ScanSmart	IPv4	✓	Windows 7 or later, Mac OS X El Capitan or later
	Event Manager	IPv4	✓	Windows XP, Vista, Mac OS X v10.6 to Yosemite
	Epson Connect (Scan to Cloud)	IPv4	-	-
	AirPrint (Scan)	IPv4, IPv6	✓	OS X Mavericks or later

Functions			Supported	Remarks
Fax	Send a fax	IPv4	✓	-
	Receive a fax	IPv4	✓	-
	AirPrint (Faxout)	IPv4, IPv6	✓	OS X Mountain Lion or later

Security Protocol

SSL/TLS	HTTPS Server/Client, IPPS
SNMPv3	

Supported Third Party Services

AirPrint	Print	iOS 5 or later/Mac OS X v10.7.x or later
	Scan	OS X Mavericks or later
	Fax	OS X Mountain Lion or later

Dimensions

ET-4800 Series/L5290 Series

Dimensions	Storage ❏ Width: 375 mm (14.8 in.) ❏ Depth: 347 mm (13.7 in.) ❏ Height: 237 mm (9.3 in.) Printing ❏ Width: 375 mm (14.8 in.) ❏ Depth: 578 mm (22.8 in.) ❏ Height: 253 mm (10.0 in.)
Weight*	Approx. 5.0 kg (11.0 lb)

* Without the ink and the power cord.

ET-2870 Series/ET-2820 Series/L3280 Series/L3260 Series

Dimensions	Storage ❏ Width: 375 mm (14.8 in.) ❏ Depth: 347 mm (13.7 in.) ❏ Height: 179 mm (7.0 in.) Printing ❏ Width: 375 mm (14.8 in.) ❏ Depth: 578 mm (22.8 in.) ❏ Height: 253 mm (10.0 in.)
Weight*	Approx. 4.1 kg (9.0 lb)

* Without the ink and the power cord.

Electrical Specifications

ET-4800 Series/L5290 Series

Power Supply Rating	AC 100-240 V	AC 220-240 V
Rated Frequency Range	50-60 Hz	50-60 Hz
Rated Current	0.4-0.2 A	0.2 A
Power Consumption (with USB Connection)	Standalone copying: Approx. 12.0 W (ISO/IEC24712) Ready mode: Approx. 4.5 W Sleep mode: Approx. 0.7 W Power off: Approx. 0.2 W	Standalone copying: Approx. 12.0 W (ISO/IEC24712) Ready mode: Approx. 4.5 W Sleep mode: Approx. 0.7 W Power off: Approx. 0.2 W

Note:

❏ *Check the label on the printer for its voltage.*

❏ *For European users, see the following Website for details on power consumption.*
http://www.epson.eu/energy-consumption

ET-2870 Series/ET-2820 Series/L3280 Series/L3260 Series

Power Supply Rating	AC 100-240 V	AC 220-240 V
Rated Frequency Range	50-60 Hz	50-60 Hz
Rated Current	0.4-0.2 A	0.2 A

Power Consumption (with USB Connection)	Standalone copying: Approx. 12.0 W (ISO/IEC24712) Ready mode: Approx. 4.5 W Sleep mode: Approx. 0.7 W Power off: Approx. 0.2 W	Standalone copying: Approx. 12.0 W (ISO/IEC24712) Ready mode: Approx. 4.5 W Sleep mode: Approx. 0.7 W Power off: Approx. 0.2 W

Note:

❏ *Check the label on the printer for its voltage.*

❏ *For European users, see the following Website for details on power consumption.*
http://www.epson.eu/energy-consumption

Environmental Specifications

Operation	Use the printer within the range shown in the following graph. 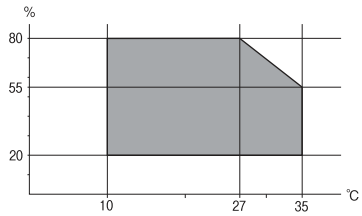 Temperature: 10 to 35°C (50 to 95°F) Humidity: 20 to 80% RH (without condensation)
Storage	Temperature: -20 to 40°C (-4 to 104°F)* Humidity: 5 to 85% RH (without condensation)

* You can store for one month at 40°C (104°F).

Environmental Specifications for Ink Bottles

Storage Temperature	-20 to 40 °C (-4 to 104 °F)*
Freezing Temperature	-15 °C (5 °F) Ink thaws and is usable after approximately 2 hours at 25 °C (77 °F).

* You can store for one month at 40 °C (104 °F).

System Requirements

❏ Windows

Windows Vista, Windows 7, Windows 8/8.1, Windows 10 or later (32-bit, 64-bit)

Windows XP SP3 (32-bit)

Windows XP Professional x64 Edition SP2

Windows Server 2003 (SP2) or later

❏ Mac OS

Mac OS X v10.6.8 or later

Note:

❏ *Mac OS may not support some applications and features.*

❏ *The UNIX File System (UFS) for Mac OS is not supported.*

Regulatory Information

Standards and Approvals

Standards and Approvals for U.S. Model

Safety	UL60950-1 CAN/CSA-C22.2 No.60950-1
EMC	FCC Part 15 Subpart B Class B CAN ICES-3 (B)/NMB-3 (B)

This equipment contains the following wireless module.

Manufacturer: Seiko Epson Corporation

Type: J26H006

This product conforms to Part 15 of the FCC Rules and RSS-210 of the IC Rules. Epson cannot accept responsibility for any failure to satisfy the protection requirements resulting from a non-recommended modification of the product. Operation is subject to the following two conditions: (1) this device may not cause harmful interference, and (2) this device must accept any interference received, including interference that may cause undesired operation of the device.

To prevent radio interference to the licensed service, this device is intended to be operated indoors and away from windows to provide maximum shielding. Equipment (or its transmit antenna) that is installed outdoors is subject to licensing.

This equipment complies with FCC/IC radiation exposure limits set forth for an uncontrolled environment and meets the FCC radio frequency (RF) Exposure Guidelines in Supplement C to OET65 and RSS-102 of the IC radio frequency (RF) Exposure rules. This equipment should be installed and operated so that the radiator is kept at least 7.9 inches (20 cm) or more away from a person's body (excluding extremities: hands, wrists, feet and ankles).

Standards and Approvals for European Models

The following models are CE/UKCA marked and in compliance with the relevant statutory requirements.

The full text of the declaration of conformity is available at the following website:

https://www.epson.eu/conformity

C622B, C634G

Frequency Range	Maximum Radio-Frequency Power Transmitted
2400-2483.5 MHz	20 dBm (EIRP)

Standards and Approvals for Australian Model

EMC	AS/NZS CISPR32 Class B

Epson hereby declares that the following equipment Models are in compliance with the essential requirements and other relevant provisions of AS/NZS4268:

C622B, C634G

Epson cannot accept responsibility for any failure to satisfy the protection requirements resulting from a non-recommended modification of the products.

Standards and Approvals for New Zealand Model

General Warning

The grant of a Telepermit for any item of terminal equipment indicates only that Telecom has accepted that the item complies with minimum conditions for connection to its network. It indicates no endorsement of the product by Telecom, nor does it provide any sort of warranty. Above all, it provides no assurance that any item will work correctly in all respects with another item of Telepermitted equipment of a different make or model, nor does it imply that any product is compatible with all of Telecom's network services.

Telepermitted equipment only may be connected to the EXT telephone port. This port is not specifically designed for 3-wire-connected equipment. 3-wire-connected equipment might not respond to incoming ringing when attached to this port.

Important Notice

Under power failure conditions, this telephone may not operate. Please ensure that a separate telephone, not dependent on local power, is available for emergency use.

This equipment is not capable, under all operating conditions, of correct operation at the higher speeds for which it is designed. Telecom will accept no responsibility should difficulties arise in such circumstances.

This equipment shall not be set up to make automatic calls to the Telecom '111' Emergency Service.

ZICTA Type Approval for Users in Zambia

See the following website to check the information for ZICTA Type Approval.

https://support.epson.net/zicta/

Restrictions on Copying

Observe the following restrictions to ensure the responsible and legal use of the printer.

Copying of the following items is prohibited by law:

- ❏ Bank bills, coins, government-issued marketable securities, government bond securities, and municipal securities
- ❏ Unused postage stamps, pre-stamped postcards, and other official postal items bearing valid postage
- ❏ Government-issued revenue stamps, and securities issued according to legal procedure

Exercise caution when copying the following items:

- ❏ Private marketable securities (stock certificates, negotiable notes, checks, etc.), monthly passes, concession tickets, etc.
- ❏ Passports, driver's licenses, warrants of fitness, road passes, food stamps, tickets, etc.

Note:
Copying these items may also be prohibited by law.

Responsible use of copyrighted materials:

Printers can be misused by improperly copying copyrighted materials. Unless acting on the advice of a knowledgeable attorney, be responsible and respectful by obtaining the permission of the copyright holder before copying published material.

Where to Get Help

Technical Support Web Site. 280

Contacting Epson Support. 280

Technical Support Web Site

If you need further help, visit the Epson support website shown below. Select your country or region and go to the support section of your local Epson website. The latest drivers, FAQs, manuals, or other downloadables are also available from the site.

http://support.epson.net/

http://www.epson.eu/support (Europe)

If your Epson product is not operating properly and you cannot solve the problem, contact Epson support services for assistance.

Contacting Epson Support

Before Contacting Epson

If your Epson product is not operating properly and you cannot solve the problem using the troubleshooting information in your product manuals, contact Epson support services for assistance.

The following Epson support list is based on the country of sale. Some products may not be sold in your current location, so be sure to contact Epson support for the area in which you purchased your product.

If Epson support for your area is not listed below, contact the dealer where you purchased your product.

Epson support will be able to help you much more quickly if you give them the following information:

- ❏ Product serial number

  (The label attachment position depends on the product; it may be on the back, the open side of the cover, or the bottom.)

- ❏ Product model
- ❏ Product software version

  (Click **About**, **Version Info**, or a similar button in the product software.)

- ❏ Brand and model of your computer
- ❏ Your computer operating system name and version
- ❏ Names and versions of the software applications you normally use with your product

Note:
Depending on the product, the dial list data for fax and/or network settings may be stored in the product's memory. Due to breakdown or repair of a product, data and/or settings may be lost. Epson shall not be responsible for the loss of any data, for backing up or recovering data and/or settings even during a warranty period. We recommend that you make your own backup data or take notes.

Help for Users in Europe

Check your Pan-European Warranty Document for information on how to contact Epson support.

Help for Users in Taiwan

Contacts for information, support, and services are:

World Wide Web

http://www.epson.com.tw

Information on product specifications, drivers for download, and products enquiry are available.

Epson HelpDesk

Phone: +886-2-2165-3138

Our HelpDesk team can help you with the following over the phone:

- ❏ Sales enquiries and product information
- ❏ Product usage questions or problems
- ❏ Enquiries on repair service and warranty

Repair service center:

http://www.tekcare.com.tw/branchMap.page

TekCare corporation is an authorized service center for Epson Taiwan Technology & Trading Ltd.

Help for Users in Australia

Epson Australia wishes to provide you with a high level of customer service. In addition to your product manuals, we provide the following sources for obtaining information:

Internet URL

http://www.epson.com.au

Access the Epson Australia World Wide Web pages. Worth taking your modem here for the occasional surf! The site provides a download area for drivers, Epson contact points, new product information and technical support (e-mail).

Epson Helpdesk

Phone: 1300-361-054

Epson Helpdesk is provided as a final backup to make sure our clients have access to advice. Operators on the Helpdesk can aid you in installing, configuring and operating your Epson product. Our Pre-sales Helpdesk staff can provide literature on new Epson products and advise where the nearest dealer or service agent is located. Many types of queries are answered here.

We encourage you to have all the relevant information on hand when you ring. The more information you prepare, the faster we can help solve the problem. This information includes your Epson product manuals, type of computer, operating system, application programs, and any information you feel is required.

Transportation of Product

Epson recommends retaining product packaging for future transportation. Securing the ink tank with tape and keeping the product upright is also recommended.

Help for Users in New Zealand

Epson New Zealand wishes to provide you with a high level of customer service. In addition to your product documentation, we provide the following sources for obtaining information:

Internet URL

http://www.epson.co.nz

Access the Epson New Zealand World Wide Web pages. Worth taking your modem here for the occasional surf! The site provides a download area for drivers, Epson contact points, new product information and technical support (e-mail).

Epson Helpdesk

Phone: 0800 237 766

Epson Helpdesk is provided as a final backup to make sure our clients have access to advice. Operators on the Helpdesk can aid you in installing, configuring and operating your Epson product. Our Pre-sales Helpdesk staff can provide literature on new Epson products and advise where the nearest dealer or service agent is located. Many types of queries are answered here.

We encourage you to have all the relevant information on hand when you ring. The more information you prepare, the faster we can help solve the problem. This information includes your Epson product documentation, type of computer, operating system, application programs, and any information you feel is required.

Transportation of Product

Epson recommends retaining product packaging for future transportation. Securing the ink tank with tape and keeping the product upright is also recommended.

Help for Users in Singapore

Sources of information, support, and services available from Epson Singapore are:

World Wide Web

http://www.epson.com.sg

Information on product specifications, drivers for download, Frequently Asked Questions (FAQ), Sales Enquiries, and Technical Support via e-mail are available.

Epson HelpDesk

Toll Free: 800-120-5564

Our HelpDesk team can help you with the following over the phone:

- ❏ Sales enquiries and product information
- ❏ Product usage questions or problem troubleshooting
- ❏ Enquiries on repair service and warranty

Help for Users in Thailand

Contacts for information, support, and services are:

World Wide Web

http://www.epson.co.th

Information on product specifications, drivers for download, Frequently Asked Questions (FAQ), and e-mail are available.

Epson Call Centre

Phone: 66-2460-9699

Email: support@eth.epson.co.th

Our Call Centre team can help you with the following over the phone:

- ❏ Sales enquiries and product information
- ❏ Product usage questions or problems
- ❏ Enquiries on repair service and warranty

Help for Users in Vietnam

Contacts for information, support, and services are:

Epson Service Center

27 Yen Lang, Trung Liet Ward, Dong Da District, Ha Noi City. Tel: +84 24 7300 0911

38 Le Dinh Ly, Thac Gian Ward, Thanh Khe District, Da Nang. Tel: +84 23 6356 2666

194/3 Nguyen Trong Tuyen, Ward 8, Phu Nhuan Dist., HCMC. Tel: +84 28 7300 0911

31 Phan Boi Chau, Ward 14, Binh Thanh District, HCMC. Tel: +84 28 35100818

Help for Users in Indonesia

Contacts for information, support, and services are:

World Wide Web

http://www.epson.co.id

- ❏ Information on product specifications, drivers for download
- ❏ Frequently Asked Questions (FAQ), Sales Enquiries, questions through e-mail

Epson Hotline

Phone: 1500-766 (Indonesia Only)

Email: customer.care@ein.epson.co.id

Our Hotline team can help you with the following over the phone or email:

- ❏ Sales enquiries and product information
- ❏ Technical support

Help for Users in Hong Kong

To obtain technical support as well as other after-sales services, users are welcome to contact Epson Hong Kong Limited.

Internet Home Page

http://www.epson.com.hk

Epson Hong Kong has established a local home page in both Chinese and English on the Internet to provide users with the following information:

- ❏ Product information
- ❏ Answers to Frequently Asked Questions (FAQs)
- ❏ Latest versions of Epson product drivers

Technical Support Hotline

You can also contact our technical staff at the following telephone and fax numbers:

Phone: 852-2827-8911

Fax: 852-2827-4383

Help for Users in Malaysia

Contacts for information, support, and services are:

World Wide Web

http://www.epson.com.my

- ❏ Information on product specifications, drivers for download
- ❏ Frequently Asked Questions (FAQ), Sales Enquiries, questions through e-mail

Epson Call Centre

Phone: 1800-81-7349 (Toll Free)

Email: websupport@emsb.epson.com.my

- ❏ Sales enquiries and product information
- ❏ Product usage questions or problems
- ❏ Enquiries on repair services and warranty

Epson Malaysia Sdn Bhd (Head Office)

Phone: 603-56288288

Fax: 603-5628 8388/603-5621 2088

Help for Users in India

Contacts for information, support, and services are:

World Wide Web

http://www.epson.co.in

Information on product specifications, drivers for download, and products enquiry are available.

Toll Free Helpline

For Service, Product information or to order consumables -

18004250011 / 186030001600 / 1800123001600 (9AM – 6PM)

Email

calllog@epson–india.in

WhatsApp

+91 96400 00333

Help for Users in the Philippines

To obtain technical support as well as other after sales services, users are welcome to contact the Epson Philippines Corporation at the telephone, fax numbers and e-mail address below:

World Wide Web

http://www.epson.com.ph

Information on product specifications, drivers for download, Frequently Asked Questions (FAQ), and E-mail Enquiries are available.

Epson Philippines Customer Care

Toll Free: (PLDT) 1-800-1069-37766

Toll Free: (Digitel) 1-800-3-0037766

Metro Manila: +632-8441-9030

Web Site: https://www.epson.com.ph/contact

E-mail: customercare@epc.epson.com.ph

Accessible 9am to 6pm, Monday through Saturday (Except public holidays)

Our Customer Care team can help you with the following over the phone:

- ❏ Sales enquiries and product information
- ❏ Product usage questions or problems
- ❏ Enquiries on repair service and warranty

Epson Philippines Corporation

Trunk Line: +632-8706-2609

Fax: +632-8706-2663 / +632-8706-2665