hama

00
220879

PROJECTOR BRACKET

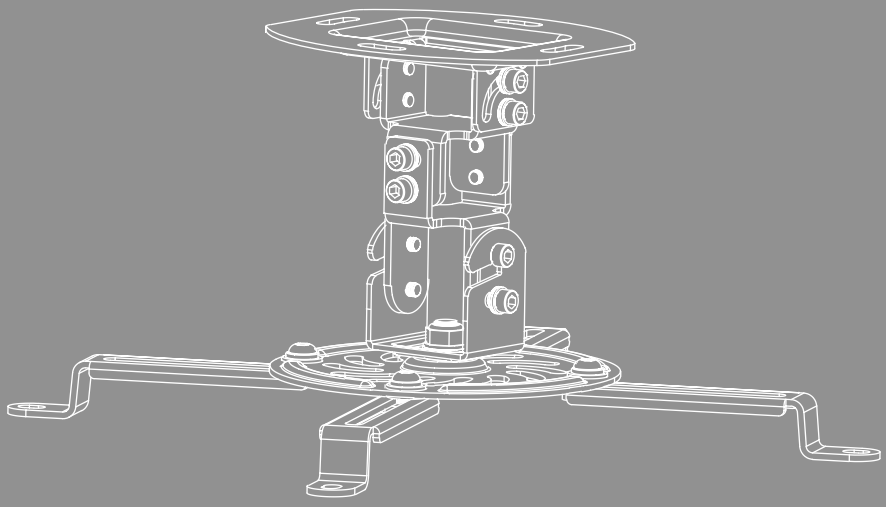

GB Operating Instructions

Contents

1. Explanation of warning symbols and notes 3
2. Package contents 4
3. Additionally required tools 4
4. Safety instructions 5
5. Application and specifications 5
6. Preparation and assembly 6
6.1 Cable management 7
6.2 Ceiling installation 7
6.3 Mounting on the projector 8
6.4 Attaching the bracket to the mounting plate 9
7. Adjustment & maintenance 10
8. Setting options 10
9. Technical data 11
10. Warranty disclaimer 12
11. Service and support 12
12. Warranty conditions 12

GB Operating Instructions

Thank you for choosing a Hama product.
Take your time and read the following instructions and information completely. Please keep these instructions in a safe place for future reference. If you sell the device, pass on the illustrated quick start guide and the safety instructions in printed form to the new owner.

1. Explanation of warning symbols and notes

Warning

This symbol is used to indicate safety instructions or to draw your attention to specific hazards and risks.

Note

This symbol is used to indicate additional information or important notes.

2. Package contents

- Projector bracket
- Mounting kit
- Safety instructions, illustrated quick start guide

Mounting kit

A1	6x55 (x4)	C2	M4x10 (x4)
A2	Ø8x50 (x2)	C3	M5x10 (x4)
A3	M6 (x4)	C4	M6x10 (x4)
B1	M3 (x4)	D1	M5x12 (x2)
B2	M4 (x4)	D2	M5 (x2)
B3	M5 (x4)	D3	M5 (x2)
B4	M6 (x4)	D4	(x1)
C1	M3x8 (x4)		

Note

Please check the mounting kit for completeness before installing the bracket and ensure that there are no faulty or damaged parts.

3. Additionally required tools

Note

Never install the bracket alone. Seek assistance and help!

4. Safety instructions

Warning

- Given the multitude of terminal devices and wall structures available on the market, the supplied mounting kit is unable to cover every option.
- It occasionally happens that the screws for attaching the device to the bracket are too long.
- Please note that the supplied wall plugs are for use with solid, hollow and board construction materials only.
- Read the operating instructions for your terminal device before attempting to mount it. The instructions provide information about the type and measurements of suitable fastening materials.
- If the supplied mounting kit does not contain suitable fastening materials for mounting the terminal device, purchase these from a specialised dealer.
- Never apply force during assembly. This can damage your device or the bracket.
- If in doubt, have this product installed by a qualified technician - do not attempt to install it yourself!

- Do not mount the product above locations where persons might sit or stand.
- Once you have mounted the product and the attached load, check that they are sufficiently secure and safe to use.
- You should repeat this check at regular intervals (at least every three months).
- Ensure that the product does not exceed its maximum permitted carrying capacity and that no load exceeding the maximum permitted dimensions is attached.
- Make sure that the product is loaded symmetrically.
- Maintain the necessary safety clearance around the attached load (depending on the model).
- In the event of damage to the product, remove the attached load and stop using the product.
- Do not attach any additional objects to the product.

5. Application and specifications

- The bracket is used for mounting flat screens in private, non-commercial households.
- The bracket is intended only for use inside buildings.
- Use the bracket only for the intended purpose.

6. Preparation and assembly

Note

- Never install the bracket alone. Seek assistance and help!
- Different end devices have different connections for cabling and other devices. Before commencing the installation, check whether the necessary connections can still be reached after mounting.
- Depending on the product and mounting method, you may not need all parts of the mounting kit. It is therefore possible that unneeded screws and other small parts will be left over even after correct mounting. Keep these in a safe place together with these operating instructions for use for later reference (sale of the product, moving house, relocation of the bracket, new TV, etc.).

Warning

- Be aware that the brackets are only suitable for wall mounting.
- Before installation, check that the wall you have chosen is suitable for the weight to be mounted. Also make sure that there are no electric, water, gas or other lines running through the wall at the mounting site.

Note - Fischer plugs

The Fischer plugs supplied are approved for the following building materials:

- Concrete
- Plasterboard and gypsum fibreboard
- Vertical perforated brick
- Lightweight concrete hollow block
- Hollow brick and concrete ceilings
- Perforated sand-lime brick
- Solid sand-lime brick
- Natural stone
- Aerated concrete
- Chipboard
- Solid plaster boards
- Lightweight concrete solid block
- Solid brick

6.1 Cable management

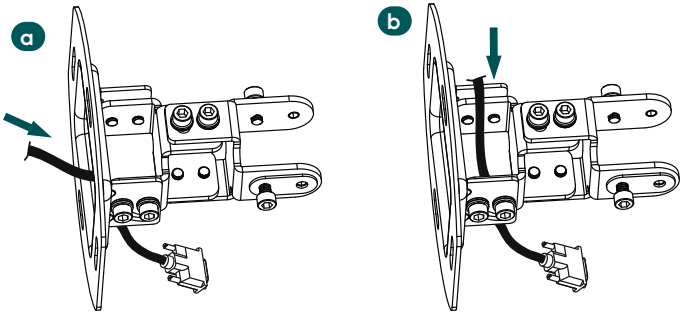

- Route the cables through the projector bracket as shown above according to your cable routing (a flush-mounted or b surface-mounted installation or cable duct).

6.2 Ceiling installation

Get support and help from other people for the following assembly steps.

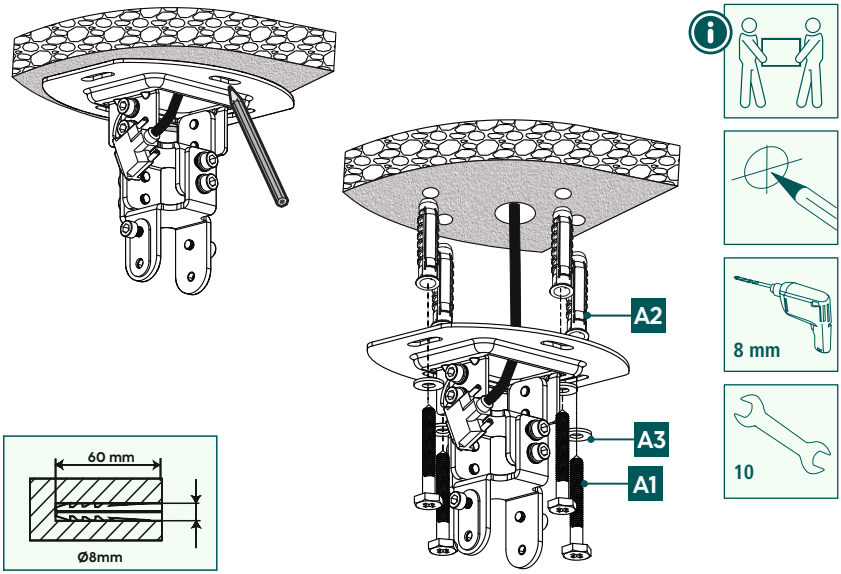

- First use the bracket as a template and re-measure if necessary to ensure that the position is correct. Use a spirit level to check the horizontal and vertical alignment of the bracket on the ceiling. Now mark the holes on the ceiling.
- To attach the projector bracket to the wall or ceiling, you need a drill and a drilling attachment with a diameter of 8 mm. Make sure that the drilling attachment is suitable for the intended ceiling. The depth of the hole should be 60 mm.
- To ensure a secure hold, vacuum out the drill holes with a vacuum nozzle so that the drill hole is free of drill dust. Now insert the plug [A2] into the drill hole so that it is flush with the hole.
- Attach the projector bracket to the ceiling as shown above using the enclosed mounting material ([A2] plug, [A3] M6 washer and [A1] 6x55 mm screw).

6.3 Mounting on the projector

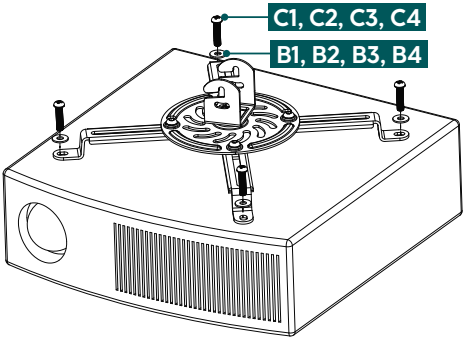

- The arms of the mounting plate are pre-assembled. Position them according to your projector.
- Mount the mounting plate on the projector using the enclosed mounting material.
- Note the combination of the screw and washer as listed above.

6.4 Attaching the bracket to the mounting plate

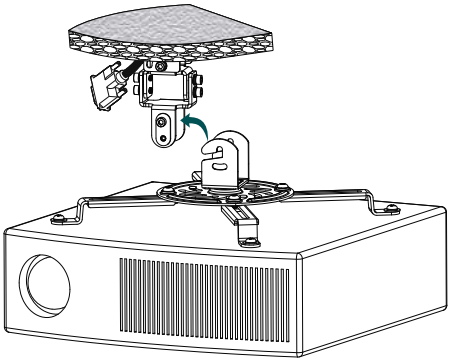

- Hang the projector on the bracket as shown above.

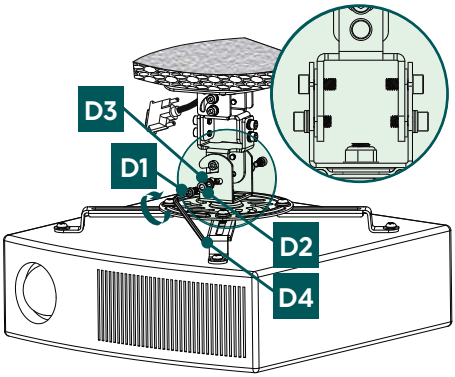

- Then fix the bracket to the lower screw hole on both sides using the screw [D1] and the washers [D2] and [D3]. Use the Allen key [D4] for this.

7. Adjustment & maintenance

Note

Never adjust the bracket alone. Seek assistance and help!

Note - tiltable / full-motion brackets

- Ensure that no electrical cables are crushed or damaged during installation or adjustment.
- During adjustment, ensure that the product is loaded symmetrically and that the maximum permitted carrying capacity is not exceeded.

- Check the strength and operational safety of the bracket and the load attached to it at regular intervals (at least quarterly).
- Clean only with water or conventional household cleaners.

8. Setting options

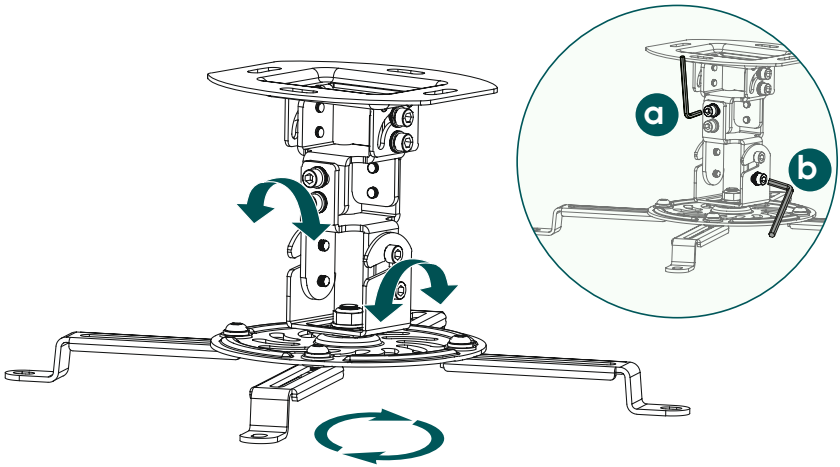

- No screws need to be loosened for rotation.
- The bracket can be tilted to the side (left/right) and forwards (forwards/backwards) by -/+15° respectively. To adjust the inclination, loosen the a and/or b screws slightly, select the desired setting and then retighten the screws securely.

9. Technical data

Maximum load:	13.5 kg
Distance between threaded holes:	up to 320 mm
Rotation range:	up to 360°
Tilt (left/right and forwards/backwards):	up to -/+15° in each case
Ceiling clearance:	15 cm

10. Warranty disclaimer

Hama GmbH & Co KG assumes no liability and provides no warranty for damage resulting from improper installation/mounting, improper use of the product or from failure to observe the operating instructions and/or safety notes.

11. Service and support

Please contact Hama Product Consulting if you have any questions about this product.
Hotline: +49 9091 502-0 (German/English)
Further support information can be found here: www.hama.com

12. Warranty conditions

For this product, HAMA GmbH & Co KG grants you an extended manufacturer's warranty for freedom from defects, usability, workmanship and the durability of the materials used for a period of 10 years. Excluded from the guarantee is the compatibility of the product with future standards of further developed hardware.
Within the specified period, Hama GmbH & Co KG will remedy a justified warranty claim at its own discretion, free of charge, either by repair or replacement.
The warranty period begins on the date of purchase of this product and is valid throughout the EU.
The warranty granted is in addition to and does not affect your statutory rights. Damage caused by improper use, normal wear and tear, exposure to chemicals or force majeure, as well as tampering or repairs by you or third parties, are excluded from the warranty.
Furthermore, accessories that are not part of the basic equipment of the product (promotional parts) are excluded from the warranty.
In the event of a warranty claim, please contact us at Hama GmbH & Co KG, Dresdner Str. 9, 86653 Monheim, Germany, enclosing proof of purchase. You are also welcome to contact us at www.hama.de or by phone on +49 (0)9091/502-0.