Freezer 36 CO

Multi Compatible Tower CPU Cooler for Continuous Operation

LIMITED 6 YEARS WARRANTY

General Specifications

Compatibility	Intel® LGA1851 | LGA1700 AMD® AM5 | AM4
PI | NNPI	250 | 234
TIM	MX-6 (0.8 g)
Warranty	6 Years
Operating Ambient Temperature	0–40 °C
Dimensions	104 (L) x 126 (W) x 159 (H) mm
Weight	890 g

Heatsink Specifications

Heatpipes	4x 6 mm Ø, Copper
Finnstack	59x 0.4 mm, Aluminium

Fan Specifications

General	2x P12 PWM PST CO
Speed	200–1800 rpm, PWM Controlled (0 rpm below 5 % PWM)
Bearing	Dual Ball Bearing
Current | Voltage	0.10 A | 12 V DC
Cable Length	200 mm + 80 mm Splitter Cable
Connector	4-Pin PWM-Connector + 4-Pin Plug

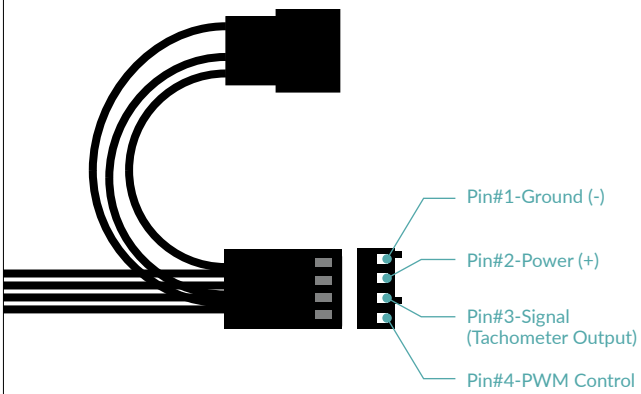

Shipping Information – Freezer 36 CO

Box Dimension	190 (L) x 186 (W) x 117 (H) mm
Gross Weight	1230 g
SKU	ACFRE00122A
EAN	840033401944
UPC	4895213704137

Freezer 36 CO

Multi Compatible Tower CPU Cooler for Continuous Operation

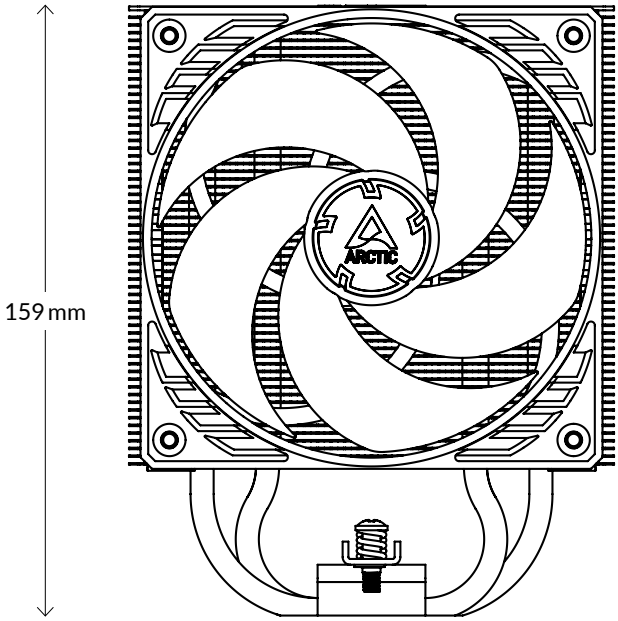

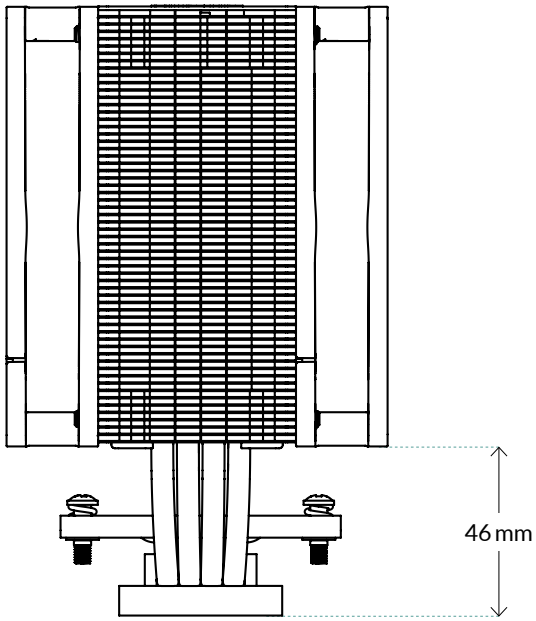

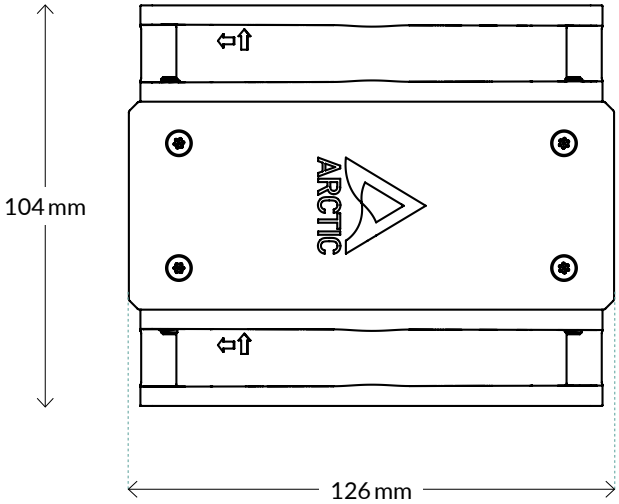

Carbon Neutral
green.arctic.de

All materials are compatible with RoHS requirements.

MORE INFORMATION

ARCTIC
arctic.de

MANUALS