Canon

TR7600 series

Online Manual

English

Contents

Using Online Manual. 12

Symbols Used in This Document. 13

Touch-enabled Device Users (Windows). 14

Trademarks and Licenses. 15

Network. 35

Restrictions. 37

Network Connection Tips. 39

Default Network Settings. 40

Detect Same Printer Name. 42

Connects to Another Computer via LAN/Changes from USB to LAN Connection. 43

Printing Network Settings. 44

Reconfiguration Method of Wi-Fi Connection. 49

Connecting with Wireless Direct. 50

Wi-Fi Connection Assistant (Windows). 54

Wi-Fi Connection Assistant. 55

Starting Up Wi-Fi Connection Assistant. 56

Diagnosing and Repairing Network Settings. 57

Performing/Changing Network Settings. 58

Canon Wi-Fi Connection Assistant Screen. 59

Performing Network Settings. 63

Performing/Changing Wi-Fi Settings. 64

Assigning Printer Information. 69

List of Models Which Does Not Support Diagnosis and Repair Function. 70

List of Models Which Does Not Support IPv6 Configuration via USB Connection. 71

IJ Network Device Setup Utility (macOS). 73

IJ Network Device Setup Utility. 74

Starting Up IJ Network Device Setup Utility. 75

Diagnosing and Repairing Network Settings. 76

List of Models Which Does Not Support Diagnosis and Repair Function. 77

Handling Paper, Originals, Ink Tanks, etc.. 78

Loading Paper. 79

Paper Sources. 80
Loading Plain Paper / Photo Paper in Rear Tray. 82
Loading Plain Paper in Cassette. 87
Loading Envelopes in Rear Tray. 92
Loading Originals. 97
Where to Load Originals. 98
Loading Originals on Platen. 99
Loading Documents in the ADF (Auto Document Feeder). 101
Loading Based on Use. 103
Supported Originals. 106
Replacing Ink Tanks. 108
Replacing Ink Tanks. 109
Checking Ink Status on the Touch Screen. 114
Ink Tips. 115
If Printing Is Faint or Uneven. 116
Maintenance Procedure. 117
Printing the Nozzle Check Pattern. 120
Examining the Nozzle Check Pattern. 121
Cleaning the Print Head. 123
Deep Print Head Cleaning. 125
Aligning the Print Head. 127
Performing Maintenance Functions from Your Computer (macOS). 130
Opening Remote UI for Maintenance. 131
Cleaning the Print Heads. 132
Adjusting Print Head Position. 134
Checking Ink Status from Your Computer. 135
Cleaning. 136
Cleaning Paper Feed Rollers. 137
Cleaning Inside the Printer (Bottom Plate Cleaning). 139
Overview. 142
Safety. 143
Safety Precautions. 144
Regulatory Information. 147
WEEE. 148

Handling Precautions. 159
Legal Restrictions on Scanning/Copying. 160
Printer Handling Precautions. 161
Transporting Your Printer. 162
When Repairing, Lending, or Disposing of the Printer. 163
Keeping Print Quality High. 164
Main Components and Their Use. 165
Main Components. 166
Front View. 167
Rear View. 170
Inside View. 171
Operation Panel. 172
Power Supply. 173
Checking that Power Is On. 174
Turning the Printer On and Off. 175
Checking the Power Plug/Power Cord. 177
Unplugging the Printer. 178
Using Touch Screen. 179
Changing Settings. 183
Changing Printer Settings from Your Computer (Windows). 184
Changing the Print Options. 185
Registering a Frequently Used Printing Profile. 186
Setting the Ink to be Used. 188
Managing the Printer Power. 189
Changing the Printer Operation Mode. 191
Changing Printer Settings from Your Computer (macOS). 193
Managing the Printer Power. 194
Changing the Printer Operation Mode. 195
Changing Settings from Operation Panel. 196
Changing Settings from Operation Panel. 197
Setting Items on Operation Panel. 199
FAX settings. 200
Print settings. 204
LAN settings. 205
Other printer settings. 210

Language selection. 213
Firmware update. 214
Reset setting. 215
Feed settings. 216
Web service setup. 217
ECO settings. 218
Quiet setting. 220
System information. 222
Specifications. 223
Information about Paper. 227
Supported Media Types. 228
Paper Load Limit. 231
Unsupported Media Types. 233
Handling Paper. 234
Before Printing on Art Paper. 235
Printing. 237
Printing from Computer. 238
Printing from Application Software (Windows Printer Driver). 239
Basic Printing Setup. 240
Paper Settings on the Printer Driver and the Printer (Media Type). 244
Paper Settings on the Printer Driver and the Printer (Paper Size). 246
Various Printing Methods. 248
Setting a Page Size and Orientation. 249
Setting the Number of Copies and Printing Order. 250
Perform Borderless Printing. 252
Scaled Printing. 255
Page Layout Printing. 257
Duplex Printing. 259
Setting Up Envelope Printing. 263
Printing on Postcards. 265
Overview of the Printer Driver. 267
Canon IJ Printer Driver. 268
Opening Printer Driver's Setup Screen. 269

Canon IJ Status Monitor. 270
Checking Ink Status from Your Computer. 272
Instructions for Use (Printer Driver). 273
Printer Driver Description. 275
Quick Setup Tab Description. 276
Main Tab Description. 283
Page Setup Tab Description. 289
Maintenance Tab Description. 302
Canon IJ Status Monitor Description. 304
Installing the MP Drivers. 307
Printing from Application Software (macOS AirPrint). 308
Printing. 309
Perform Borderless Printing. 312
Printing on Postcards. 314
Adding Printer. 316
How to Open Printer Settings Screen. 317
Displaying the Printing Status Screen. 318
Deleting the Undesired Print Job. 319
Removing Printer That Is No Longer Required from List of Printers. 320
Paper Settings. 321
Copying. 325
Making Copies. 326
Setting Items for Copying. 329
Scanning. 332
Scanning from Computer (Windows). 333
Scanning According to Item Type or Purpose (IJ Scan Utility). 334
IJ Scan Utility Features. 335
Scanning Easily (Auto Scan). 337
Scanning Documents and Photos. 338
Creating/Editing PDF Files. 339
Scanning Using Application Software (ScanGear). 342
What Is ScanGear (Scanner Driver)?. 343
Starting ScanGear (Scanner Driver). 345

Scanning in Basic Mode. 346
ScanGear (Scanner Driver) Screens. 349
Basic Mode Tab. 350
Advanced Mode Tab. 358
General Notes (Scanner Driver). 364
Scanning Tips. 366
Positioning Originals (Scanning from Computer). 367
Network Scan Settings. 370
Scanning from Computer (macOS). 374
Scanning According to Item Type or Purpose (IJ Scan Utility Lite). 375
IJ Scan Utility Lite Features. 376
Scanning Easily (Auto Scan). 378
Scanning Documents and Photos. 380
Scanning Tips. 381
Positioning Originals (Scanning from Computer). 382
Faxing. 387
Preparing for Faxing. 388
Connecting Telephone Line. 390
Setting Telephone Line Type. 394
Setting Receive Mode. 397
Setting Sender Information. 402
Registering Recipients. 409
Registering Recipients Using Operation Panel of Printer. 410
Registering Fax/Telephone Number of Recipients. 411
Registering Recipients in Group Dial. 415
Changing Registered Information. 419
Deleting Registered Information. 421
Printing List of Registered Destinations. 422
Registering Recipients Using Speed Dial Utility2 (Windows). 423
Starting Up Speed Dial Utility2. 424
Speed Dial Utility2 Dialog box. 425
Saving Registered Telephone Directory on Printer to Your Computer. 427
Registering a Fax/telephone Number Using Speed Dial Utility2. 428
Changing a Fax/telephone Number Using Speed Dial Utility2. 430

Deleting a Fax/telephone Number Using Speed Dial Utility2. 432
Changing Sender Information Using Speed Dial Utility2. 433
Registering/Changing Rejected Number Using Speed Dial Utility2. 434
Registering Telephone Directory Has been Saved on Your Computer to Printer. 435
Registering Recipients Using Speed Dial Utility2 (macOS). 436
Starting Up Speed Dial Utility2. 437
Speed Dial Utility2 Dialog. 438
Saving Registered Telephone Directory on Printer to Your Computer. 440
Registering a Fax/telephone Number Using Speed Dial Utility2. 441
Changing a Fax/telephone Number Using Speed Dial Utility2. 443
Deleting a Fax/telephone Number Using Speed Dial Utility2. 445
Changing Sender Information Using Speed Dial Utility2. 446
Registering/Changing Rejected Number Using Speed Dial Utility2. 447
Registering Telephone Directory Has been Saved on Your Computer to Printer. 448
Sending Faxes Using Operation Panel of Printer. 449
Sending Faxes by Entering Fax/Telephone Number. 450
Resending Faxes (Redialing Busy Number). 454
Setting Items for Sending Faxes. 456
Sending Faxes from Computer (Windows). 458
Sending a FAX (Fax Driver). 459
Creating an Address Book (Fax Driver). 462
Edit or Remove a Recipient from an Address Book (Fax Driver). 466
Search for a Recipient in an Address Book (Fax Driver). 469
Cannot Send Faxes from Computer. 471
How to Open the Setting Screen of the Fax Driver. 473
General Notes (Fax Driver). 475
Sending Faxes from Computer (macOS). 476
Sending Faxes Using AirPrint. 477
General Notes (Fax Transmission Using AirPrint). 481
Receiving Faxes. 482
Receiving Faxes. 483
Changing Paper Settings. 488
Memory Reception. 490
Other Useful Fax Functions. 492
Document Stored in Printer's Memory. 493

Printing Document in Printer's Memory. 494
Deleting Document in Printer's Memory. 496
Frequently Asked Questions. 498
Network Settings and Common Problems. 501
Network Communication Problems. 503
Cannot Find Printer on Network. 504
Cannot Find Printer During Setup. 505
Cannot Proceed beyond Printer Connection Screen (Cannot Find Printer Connected via USB). 508
Cannot Find Printer while Using Wi-Fi. 510
Network Connection Problems. 512
Printer Suddenly Stopped Working for Some Reason. 513
Network Key (Password) Unknown. 518
Printer Cannot Be Used After Replacing Wireless Router or Changed Router Settings. 520
Other Network Problems. 522
Checking Network Information. 523
Restoring to Factory Defaults. 526
Problems while Printing/Scanning from Smartphone/Tablet. 527
Cannot Print/Scan from Smartphone/Tablet. 528
Printing Problems. 532
Printer Does Not Print. 533
Ink Does Not Come Out. 536
Printer Does Not Pick up or Feed the Paper/"No Paper" Error. 538
Printout Results Are Unsatisfactory. 541
Printouts Are Blank/Blurry or Fuzzy/Inaccurate or Bleeding Colors/Streaks or Lines. 543
Lines Are Misaligned/Distorted. 547
Paper Is Smudged / Printed Surface Is Scratched. 548
Vertical Line Next to Image. 552
Scanning Problems (Windows). 553
Scanning Problems. 554
Scanner Does Not Work. 555
ScanGear (Scanner Driver) Does Not Start. 556
Scanning Problems (macOS). 557
Scanning Problems. 558

Scanner Does Not Work. 559
Scanner Driver Does Not Start. 560
Faxing Problems. 561
Problems Sending Faxes. 562
Cannot Send a Fax. 563
Errors Often Occur When Send a Fax. 565
Problems Receiving Faxes. 566
Cannot Print a Fax/"Fax received. Saved in memory." Appears. 567
Telephone Problems. 568
Cannot Dial. 569
Telephone Disconnects During a Call. 570
Poor Quality Fax Received. 571
Mechanical Problems. 572
Printer Does Not Turn On. 573
Printer Turns Off Unexpectedly or Repeatedly. 574
USB Connection Problems. 576
Cannot Communicate with Printer via USB. 577
Wrong Language Appears in Touch Screen. 578
Installation and Download Problems. 579
Failed to MP Drivers Installation (Windows). 580
Updating MP Drivers in Network Environment (Windows). 581
Errors and Messages. 582
When Error Occurred. 583
Message (Support Code) Appears. 585
List of Support Code for Error. 588
What to Do When Paper Is Jammed. 590
1300. 591
1303. 593
1304. 595
1313. 597
Paper Is Jammed inside Printer. 598
Removing Jammed Paper from Rear Side. 601
1000. 606

1003. 608
1200. 610
1401. 611
1600. 612
1660. 613
1688. 614
1689. 615
1700. 616
Shipping Tape etc. Are Still Attached (1890). 617
2110. 618
2113. 621
2114. 624
2900. 627
2901. 628
4103. 629
5011. 630
5012. 631
5100. 632
5200. 633
5B00. 634
6000. 635
C000. 636

Using Online Manual

- Operating Environment
- Symbols Used in This Document
- Touch-enabled Device Users (Windows)
- Printing Online Manual
- Trademarks and Licenses
- Screenshots in This Manual

Symbols Used in This Document

Warning

Instructions that, if ignored, could result in death, serious personal injury, or property damage caused by incorrect operation of the equipment. These must be observed for safe operation.

Caution

Instructions that, if ignored, could result in personal injury or property damage caused by incorrect operation of the equipment. These must be observed for safe operation.

Important

Instructions including important information that must be observed to avoid damage and injury or improper use of the product. Be sure to read these instructions.

Note

Instructions including notes for operation and additional explanations.

Basics

Instructions explaining basic operations of your product.

Note

- Icons may vary depending on your product.

Touch-enabled Device Users (Windows)

For touch actions, you need to replace "right-click" in this document with the action set on the operating system. For example, if the action is set to "press and hold" on your operating system, replace "right-click" with "press and hold."

Trademarks and Licenses

- Microsoft, Excel, Internet Explorer, Microsoft Edge, Microsoft Store, OneDrive, PowerPoint, Windows and Windows Vista are trademarks of the Microsoft group of companies.
- Mac, Mac OS, macOS, OS X, AirPort, App Store, AirPrint, the AirPrint logo, Safari, Bonjour, iPad, iPad Air, iPad mini, iPadOS, iPhone and iPod touch are trademarks of Apple Inc., registered in the U.S. and other countries.
- The Mopria® word mark and the Mopria® Logo are registered and/or unregistered trademarks of Mopria Alliance, Inc. in the United States and other countries. Unauthorized use is strictly prohibited.
- IOS is a trademark or registered trademark of Cisco in the U.S. and other countries and is used under license.
- Google Cloud Print, Google Chrome, Chrome OS, Chromebook, Android, Google Drive, Google Apps and Google Analytics are either registered trademarks or trademarks of Google Inc. Google Play and Google Play Logo are trademarks of Google LLC.
- Adobe, Acrobat, Flash, Photoshop, Photoshop Elements, Lightroom, Adobe RGB and Adobe RGB (1998) are either registered trademarks or trademarks of Adobe Systems Incorporated in the United States and/or other countries.
- Bluetooth is a trademark of Bluetooth SIG, Inc., U.S.A. and licensed to Canon Inc.
- Autodesk and AutoCAD are registered trademarks or trademarks of Autodesk, Inc., and/or its subsidiaries and/or affiliates in the USA and/or other countries.
- QR Code is a registered trademark of DENSO WAVE INCORPORATED in Japan and in other countries.
- USB Type-C™ is a trademark of USB Implementers Forum.
- HP-GL and HP-GL/2 are either registered trademarks or trademarks of HP Inc. in the U.S. and/or other countries.

Note

- The formal name of Windows Vista is Microsoft Windows Vista operating system.

Copyright (c) 2003-2015 Apple Inc. All rights reserved.

Redistribution and use in source and binary forms, with or without modification, are permitted provided that the following conditions are met:

1. Redistributions of source code must retain the above copyright notice, this list of conditions and the following disclaimer.
2. Redistributions in binary form must reproduce the above copyright notice, this list of conditions and the following disclaimer in the documentation and/or other materials provided with the distribution.
3. Neither the name of Apple Inc. ("Apple") nor the names of its contributors may be used to endorse or promote products derived from this software without specific prior written permission.

THIS SOFTWARE IS PROVIDED BY APPLE AND ITS CONTRIBUTORS "AS IS" AND ANY EXPRESS OR IMPLIED WARRANTIES, INCLUDING, BUT NOT LIMITED TO, THE IMPLIED WARRANTIES OF MERCHANTABILITY AND FITNESS FOR A PARTICULAR PURPOSE ARE DISCLAIMED. IN NO EVENT SHALL APPLE OR ITS CONTRIBUTORS BE LIABLE FOR ANY DIRECT, INDIRECT, INCIDENTAL, SPECIAL, EXEMPLARY, OR CONSEQUENTIAL DAMAGES (INCLUDING, BUT NOT LIMITED TO, PROCUREMENT OF SUBSTITUTE GOODS OR SERVICES; LOSS OF USE, DATA, OR PROFITS; OR BUSINESS INTERRUPTION) HOWEVER CAUSED AND ON ANY THEORY OF LIABILITY, WHETHER IN CONTRACT, STRICT LIABILITY, OR TORT (INCLUDING NEGLIGENCE OR

OTHERWISE) ARISING IN ANY WAY OUT OF THE USE OF THIS SOFTWARE, EVEN IF ADVISED OF THE POSSIBILITY OF SUCH DAMAGE.

Apache License

Version 2.0, January 2004

http://www.apache.org/licenses/
TERMS AND CONDITIONS FOR USE, REPRODUCTION, AND DISTRIBUTION

1. Definitions.

   "License" shall mean the terms and conditions for use, reproduction, and distribution as defined by Sections 1 through 9 of this document.

   "Licensor" shall mean the copyright owner or entity authorized by the copyright owner that is granting the License.

   "Legal Entity" shall mean the union of the acting entity and all other entities that control, are controlled by, or are under common control with that entity. For the purposes of this definition, "control" means (i) the power, direct or indirect, to cause the direction or management of such entity, whether by contract or otherwise, or (ii) ownership of fifty percent (50%) or more of the outstanding shares, or (iii) beneficial ownership of such entity.

   "You" (or "Your") shall mean an individual or Legal Entity exercising permissions granted by this License.

   "Source" form shall mean the preferred form for making modifications, including but not limited to software source code, documentation source, and configuration files.

   "Object" form shall mean any form resulting from mechanical transformation or translation of a Source form, including but not limited to compiled object code, generated documentation, and conversions to other media types.

   "Work" shall mean the work of authorship, whether in Source or Object form, made available under the License, as indicated by a copyright notice that is included in or attached to the work (an example is provided in the Appendix below).

   "Derivative Works" shall mean any work, whether in Source or Object form, that is based on (or derived from) the Work and for which the editorial revisions, annotations, elaborations, or other modifications represent, as a whole, an original work of authorship. For the purposes of this License, Derivative Works shall not include works that remain separable from, or merely link (or bind by name) to the interfaces of, the Work and Derivative Works thereof.

   "Contribution" shall mean any work of authorship, including the original version of the Work and any modifications or additions to that Work or Derivative Works thereof, that is intentionally submitted to Licensor for inclusion in the Work by the copyright owner or by an individual or Legal Entity authorized to submit on behalf of the copyright owner. For the purposes of this definition, "submitted" means any form of electronic, verbal, or written communication sent to the Licensor or its representatives, including but not limited to communication on electronic mailing lists, source code control systems, and issue tracking systems that are managed by, or on behalf of, the Licensor for the purpose of discussing and improving the Work, but excluding communication that is conspicuously marked or otherwise designated in writing by the copyright owner as "Not a Contribution."

"Contributor" shall mean Licensor and any individual or Legal Entity on behalf of whom a Contribution has been received by Licensor and subsequently incorporated within the Work.

2. Grant of Copyright License. Subject to the terms and conditions of this License, each Contributor hereby grants to You a perpetual, worldwide, non-exclusive, no-charge, royalty-free, irrevocable copyright license to reproduce, prepare Derivative Works of, publicly display, publicly perform, sublicense, and distribute the Work and such Derivative Works in Source or Object form.
3. Grant of Patent License. Subject to the terms and conditions of this License, each Contributor hereby grants to You a perpetual, worldwide, non-exclusive, no-charge, royalty-free, irrevocable (except as stated in this section) patent license to make, have made, use, offer to sell, sell, import, and otherwise transfer the Work, where such license applies only to those patent claims licensable by such Contributor that are necessarily infringed by their Contribution(s) alone or by combination of their Contribution(s) with the Work to which such Contribution(s) was submitted. If You institute patent litigation against any entity (including a cross-claim or counterclaim in a lawsuit) alleging that the Work or a Contribution incorporated within the Work constitutes direct or contributory patent infringement, then any patent licenses granted to You under this License for that Work shall terminate as of the date such litigation is filed.
4. Redistribution. You may reproduce and distribute copies of the Work or Derivative Works thereof in any medium, with or without modifications, and in Source or Object form, provided that You meet the following conditions:

    1. You must give any other recipients of the Work or Derivative Works a copy of this License; and
    2. You must cause any modified files to carry prominent notices stating that You changed the files; and
    3. You must retain, in the Source form of any Derivative Works that You distribute, all copyright, patent, trademark, and attribution notices from the Source form of the Work, excluding those notices that do not pertain to any part of the Derivative Works; and
    4. If the Work includes a "NOTICE" text file as part of its distribution, then any Derivative Works that You distribute must include a readable copy of the attribution notices contained within such NOTICE file, excluding those notices that do not pertain to any part of the Derivative Works, in at least one of the following places: within a NOTICE text file distributed as part of the Derivative Works; within the Source form or documentation, if provided along with the Derivative Works; or, within a display generated by the Derivative Works, if and wherever such third-party notices normally appear. The contents of the NOTICE file are for informational purposes only and do not modify the License. You may add Your own attribution notices within Derivative Works that You distribute, alongside or as an addendum to the NOTICE text from the Work, provided that such additional attribution notices cannot be construed as modifying the License.

    You may add Your own copyright statement to Your modifications and may provide additional or different license terms and conditions for use, reproduction, or distribution of Your modifications, or for any such Derivative Works as a whole, provided Your use, reproduction, and distribution of the Work otherwise complies with the conditions stated in this License.

5. Submission of Contributions. Unless You explicitly state otherwise, any Contribution intentionally submitted for inclusion in the Work by You to the Licensor shall be under the terms and conditions of this License, without any additional terms or conditions. Notwithstanding the above, nothing herein shall supersede or modify the terms of any separate license agreement you may have executed with Licensor regarding such Contributions.

6. Trademarks. This License does not grant permission to use the trade names, trademarks, service marks, or product names of the Licensor, except as required for reasonable and customary use in describing the origin of the Work and reproducing the content of the NOTICE file.
7. Disclaimer of Warranty. Unless required by applicable law or agreed to in writing, Licensor provides the Work (and each Contributor provides its Contributions) on an "AS IS" BASIS, WITHOUT WARRANTIES OR CONDITIONS OF ANY KIND, either express or implied, including, without limitation, any warranties or conditions of TITLE, NON-INFRINGEMENT, MERCHANTABILITY, or FITNESS FOR A PARTICULAR PURPOSE. You are solely responsible for determining the appropriateness of using or redistributing the Work and assume any risks associated with Your exercise of permissions under this License.
8. Limitation of Liability. In no event and under no legal theory, whether in tort (including negligence), contract, or otherwise, unless required by applicable law (such as deliberate and grossly negligent acts) or agreed to in writing, shall any Contributor be liable to You for damages, including any direct, indirect, special, incidental, or consequential damages of any character arising as a result of this License or out of the use or inability to use the Work (including but not limited to damages for loss of goodwill, work stoppage, computer failure or malfunction, or any and all other commercial damages or losses), even if such Contributor has been advised of the possibility of such damages.
9. Accepting Warranty or Additional Liability. While redistributing the Work or Derivative Works thereof, You may choose to offer, and charge a fee for, acceptance of support, warranty, indemnity, or other liability obligations and/or rights consistent with this License. However, in accepting such obligations, You may act only on Your own behalf and on Your sole responsibility, not on behalf of any other Contributor, and only if You agree to indemnify, defend, and hold each Contributor harmless for any liability incurred by, or claims asserted against, such Contributor by reason of your accepting any such warranty or additional liability.
END OF TERMS AND CONDITIONS

---- Part 1: CMU/UCD copyright notice: (BSD like) -----

Copyright 1989, 1991, 1992 by Carnegie Mellon University

Derivative Work - 1996, 1998-2000

Copyright 1996, 1998-2000 The Regents of the University of California

All Rights Reserved

Permission to use, copy, modify and distribute this software and its documentation for any purpose and without fee is hereby granted, provided that the above copyright notice appears in all copies and that both that copyright notice and this permission notice appear in supporting documentation, and that the name of CMU and The Regents of the University of California not be used in advertising or publicity pertaining to distribution of the software without specific written permission.

CMU AND THE REGENTS OF THE UNIVERSITY OF CALIFORNIA DISCLAIM ALL WARRANTIES WITH REGARD TO THIS SOFTWARE, INCLUDING ALL IMPLIED WARRANTIES OF MERCHANTABILITY AND FITNESS. IN NO EVENT SHALL CMU OR THE REGENTS OF THE UNIVERSITY OF CALIFORNIA BE LIABLE FOR ANY SPECIAL, INDIRECT OR CONSEQUENTIAL DAMAGES OR ANY DAMAGES WHATSOEVER RESULTING FROM THE LOSS OF USE, DATA OR PROFITS, WHETHER IN AN ACTION OF CONTRACT, NEGLIGENCE OR OTHER TORTIOUS ACTION, ARISING OUT OF OR IN CONNECTION WITH THE USE OR PERFORMANCE OF THIS SOFTWARE.

---- Part 2: Networks Associates Technology, Inc copyright notice (BSD) -----

Copyright (c) 2001-2003, Networks Associates Technology, Inc

All rights reserved.

Redistribution and use in source and binary forms, with or without modification, are permitted provided that the following conditions are met:

* Redistributions of source code must retain the above copyright notice, this list of conditions and the following disclaimer.
* Redistributions in binary form must reproduce the above copyright notice, this list of conditions and the following disclaimer in the documentation and/or other materials provided with the distribution.
* Neither the name of the Networks Associates Technology, Inc nor the names of its contributors may be used to endorse or promote products derived from this software without specific prior written permission.

THIS SOFTWARE IS PROVIDED BY THE COPYRIGHT HOLDERS AND CONTRIBUTORS ``AS IS'' AND ANY EXPRESS OR IMPLIED WARRANTIES, INCLUDING, BUT NOT LIMITED TO, THE IMPLIED WARRANTIES OF MERCHANTABILITY AND FITNESS FOR A PARTICULAR PURPOSE ARE DISCLAIMED. IN NO EVENT SHALL THE COPYRIGHT HOLDERS OR CONTRIBUTORS BE LIABLE FOR ANY DIRECT, INDIRECT, INCIDENTAL, SPECIAL, EXEMPLARY, OR CONSEQUENTIAL DAMAGES (INCLUDING, BUT NOT LIMITED TO, PROCUREMENT OF SUBSTITUTE GOODS OR SERVICES; LOSS OF USE, DATA, OR PROFITS; OR BUSINESS INTERRUPTION) HOWEVER CAUSED AND ON ANY THEORY OF LIABILITY, WHETHER IN CONTRACT, STRICT LIABILITY, OR TORT (INCLUDING NEGLIGENCE OR OTHERWISE) ARISING IN ANY WAY OUT OF THE USE OF THIS SOFTWARE, EVEN IF ADVISED OF THE POSSIBILITY OF SUCH DAMAGE.

---- Part 3: Cambridge Broadband Ltd. copyright notice (BSD) -----

Portions of this code are copyright (c) 2001-2003, Cambridge Broadband Ltd.

All rights reserved.

Redistribution and use in source and binary forms, with or without modification, are permitted provided that the following conditions are met:

* Redistributions of source code must retain the above copyright notice, this list of conditions and the following disclaimer.
* Redistributions in binary form must reproduce the above copyright notice, this list of conditions and the following disclaimer in the documentation and/or other materials provided with the distribution.
* The name of Cambridge Broadband Ltd. may not be used to endorse or promote products derived from this software without specific prior written permission.

THIS SOFTWARE IS PROVIDED BY THE COPYRIGHT HOLDER ``AS IS'' AND ANY EXPRESS OR IMPLIED WARRANTIES, INCLUDING, BUT NOT LIMITED TO, THE IMPLIED WARRANTIES OF MERCHANTABILITY AND FITNESS FOR A PARTICULAR PURPOSE ARE DISCLAIMED. IN NO EVENT SHALL THE COPYRIGHT HOLDER BE LIABLE FOR ANY DIRECT, INDIRECT, INCIDENTAL, SPECIAL, EXEMPLARY, OR CONSEQUENTIAL DAMAGES (INCLUDING, BUT NOT LIMITED TO, PROCUREMENT OF SUBSTITUTE GOODS OR SERVICES; LOSS OF USE, DATA, OR PROFITS; OR BUSINESS INTERRUPTION) HOWEVER CAUSED AND ON ANY THEORY OF LIABILITY, WHETHER IN CONTRACT, STRICT LIABILITY, OR TORT (INCLUDING NEGLIGENCE OR OTHERWISE) ARISING IN ANY WAY OUT OF THE USE OF THIS SOFTWARE, EVEN IF ADVISED OF THE POSSIBILITY OF SUCH DAMAGE.

---- Part 4: Sun Microsystems, Inc. copyright notice (BSD) -----

Copyright c 2003 Sun Microsystems, Inc., 4150 Network Circle, Santa Clara, California 95054, U.S.A. All rights reserved.

Use is subject to license terms below.

This distribution may include materials developed by third parties.

Sun, Sun Microsystems, the Sun logo and Solaris are trademarks or registered trademarks of Sun Microsystems, Inc. in the U.S. and other countries.

Redistribution and use in source and binary forms, with or without modification, are permitted provided that the following conditions are met:

* Redistributions of source code must retain the above copyright notice, this list of conditions and the following disclaimer.
* Redistributions in binary form must reproduce the above copyright notice, this list of conditions and the following disclaimer in the documentation and/or other materials provided with the distribution.
* Neither the name of the Sun Microsystems, Inc. nor the names of its contributors may be used to endorse or promote products derived from this software without specific prior written permission.

THIS SOFTWARE IS PROVIDED BY THE COPYRIGHT HOLDERS AND CONTRIBUTORS ``AS IS'' AND ANY EXPRESS OR IMPLIED WARRANTIES, INCLUDING, BUT NOT LIMITED TO, THE IMPLIED WARRANTIES OF MERCHANTABILITY AND FITNESS FOR A PARTICULAR PURPOSE ARE DISCLAIMED. IN NO EVENT SHALL THE COPYRIGHT HOLDERS OR CONTRIBUTORS BE LIABLE FOR ANY DIRECT, INDIRECT, INCIDENTAL, SPECIAL, EXEMPLARY, OR CONSEQUENTIAL DAMAGES (INCLUDING, BUT NOT LIMITED TO, PROCUREMENT OF SUBSTITUTE GOODS OR SERVICES; LOSS OF USE, DATA, OR PROFITS; OR BUSINESS INTERRUPTION) HOWEVER CAUSED AND ON ANY THEORY OF LIABILITY, WHETHER IN CONTRACT, STRICT LIABILITY, OR TORT (INCLUDING NEGLIGENCE OR OTHERWISE) ARISING IN ANY WAY OUT OF THE USE OF THIS SOFTWARE, EVEN IF ADVISED OF THE POSSIBILITY OF SUCH DAMAGE.

---- Part 5: Sparta, Inc copyright notice (BSD) -----

Copyright (c) 2003-2012, Sparta, Inc

All rights reserved.

Redistribution and use in source and binary forms, with or without modification, are permitted provided that the following conditions are met:

* Redistributions of source code must retain the above copyright notice, this list of conditions and the following disclaimer.
* Redistributions in binary form must reproduce the above copyright notice, this list of conditions and the following disclaimer in the documentation and/or other materials provided with the distribution.
* Neither the name of Sparta, Inc nor the names of its contributors may be used to endorse or promote products derived from this software without specific prior written permission.

THIS SOFTWARE IS PROVIDED BY THE COPYRIGHT HOLDERS AND CONTRIBUTORS ``AS IS'' AND ANY EXPRESS OR IMPLIED WARRANTIES, INCLUDING, BUT NOT LIMITED TO, THE IMPLIED WARRANTIES OF MERCHANTABILITY AND FITNESS FOR A PARTICULAR PURPOSE ARE DISCLAIMED. IN NO EVENT SHALL THE COPYRIGHT HOLDERS OR CONTRIBUTORS BE LIABLE FOR ANY DIRECT, INDIRECT, INCIDENTAL, SPECIAL, EXEMPLARY, OR CONSEQUENTIAL DAMAGES (INCLUDING, BUT NOT LIMITED TO, PROCUREMENT OF SUBSTITUTE GOODS OR

SERVICES; LOSS OF USE, DATA, OR PROFITS; OR BUSINESS INTERRUPTION) HOWEVER CAUSED AND ON ANY THEORY OF LIABILITY, WHETHER IN CONTRACT, STRICT LIABILITY, OR TORT (INCLUDING NEGLIGENCE OR OTHERWISE) ARISING IN ANY WAY OUT OF THE USE OF THIS SOFTWARE, EVEN IF ADVISED OF THE POSSIBILITY OF SUCH DAMAGE.

---- Part 6: Cisco/BUPTNIC copyright notice (BSD) -----

Copyright (c) 2004, Cisco, Inc and Information Network Center of Beijing University of Posts and Telecommunications.

All rights reserved.

Redistribution and use in source and binary forms, with or without modification, are permitted provided that the following conditions are met:

* Redistributions of source code must retain the above copyright notice, this list of conditions and the following disclaimer.
* Redistributions in binary form must reproduce the above copyright notice, this list of conditions and the following disclaimer in the documentation and/or other materials provided with the distribution.
* Neither the name of Cisco, Inc, Beijing University of Posts and Telecommunications, nor the names of their contributors may be used to endorse or promote products derived from this software without specific prior written permission.

THIS SOFTWARE IS PROVIDED BY THE COPYRIGHT HOLDERS AND CONTRIBUTORS ``AS IS'' AND ANY EXPRESS OR IMPLIED WARRANTIES, INCLUDING, BUT NOT LIMITED TO, THE IMPLIED WARRANTIES OF MERCHANTABILITY AND FITNESS FOR A PARTICULAR PURPOSE ARE DISCLAIMED. IN NO EVENT SHALL THE COPYRIGHT HOLDERS OR CONTRIBUTORS BE LIABLE FOR ANY DIRECT, INDIRECT, INCIDENTAL, SPECIAL, EXEMPLARY, OR CONSEQUENTIAL DAMAGES (INCLUDING, BUT NOT LIMITED TO, PROCUREMENT OF SUBSTITUTE GOODS OR SERVICES; LOSS OF USE, DATA, OR PROFITS; OR BUSINESS INTERRUPTION) HOWEVER CAUSED AND ON ANY THEORY OF LIABILITY, WHETHER IN CONTRACT, STRICT LIABILITY, OR TORT (INCLUDING NEGLIGENCE OR OTHERWISE) ARISING IN ANY WAY OUT OF THE USE OF THIS SOFTWARE, EVEN IF ADVISED OF THE POSSIBILITY OF SUCH DAMAGE.

---- Part 7: Fabasoft R&D Software GmbH & Co KG copyright notice (BSD) -----

Copyright (c) Fabasoft R&D Software GmbH & Co KG, 2003 oss@fabasoft.com

Author: Bernhard Penz <bernhard.penz@fabasoft.com>

Redistribution and use in source and binary forms, with or without modification, are permitted provided that the following conditions are met:

* Redistributions of source code must retain the above copyright notice, this list of conditions and the following disclaimer.
* Redistributions in binary form must reproduce the above copyright notice, this list of conditions and the following disclaimer in the documentation and/or other materials provided with the distribution.
* The name of Fabasoft R&D Software GmbH & Co KG or any of its subsidiaries, brand or product names may not be used to endorse or promote products derived from this software without specific prior written permission.

THIS SOFTWARE IS PROVIDED BY THE COPYRIGHT HOLDER ``AS IS'' AND ANY EXPRESS OR IMPLIED WARRANTIES, INCLUDING, BUT NOT LIMITED TO, THE IMPLIED WARRANTIES OF

MERCHANTABILITY AND FITNESS FOR A PARTICULAR PURPOSE ARE DISCLAIMED. IN NO EVENT SHALL THE COPYRIGHT HOLDER BE LIABLE FOR ANY DIRECT, INDIRECT, INCIDENTAL, SPECIAL, EXEMPLARY, OR CONSEQUENTIAL DAMAGES (INCLUDING, BUT NOT LIMITED TO, PROCUREMENT OF SUBSTITUTE GOODS OR SERVICES; LOSS OF USE, DATA, OR PROFITS; OR BUSINESS INTERRUPTION) HOWEVER CAUSED AND ON ANY THEORY OF LIABILITY, WHETHER IN CONTRACT, STRICT LIABILITY, OR TORT (INCLUDING NEGLIGENCE OR OTHERWISE) ARISING IN ANY WAY OUT OF THE USE OF THIS SOFTWARE, EVEN IF ADVISED OF THE POSSIBILITY OF SUCH DAMAGE.

---- Part 8: Apple Inc. copyright notice (BSD) -----

Copyright (c) 2007 Apple Inc. All rights reserved.

Redistribution and use in source and binary forms, with or without modification, are permitted provided that the following conditions are met:

1. Redistributions of source code must retain the above copyright notice, this list of conditions and the following disclaimer.
2. Redistributions in binary form must reproduce the above copyright notice, this list of conditions and the following disclaimer in the documentation and/or other materials provided with the distribution.
3. Neither the name of Apple Inc. ("Apple") nor the names of its contributors may be used to endorse or promote products derived from this software without specific prior written permission.

THIS SOFTWARE IS PROVIDED BY APPLE AND ITS CONTRIBUTORS "AS IS" AND ANY EXPRESS OR IMPLIED WARRANTIES, INCLUDING, BUT NOT LIMITED TO, THE IMPLIED WARRANTIES OF MERCHANTABILITY AND FITNESS FOR A PARTICULAR PURPOSE ARE DISCLAIMED. IN NO EVENT SHALL APPLE OR ITS CONTRIBUTORS BE LIABLE FOR ANY DIRECT, INDIRECT, INCIDENTAL, SPECIAL, EXEMPLARY, OR CONSEQUENTIAL DAMAGES (INCLUDING, BUT NOT LIMITED TO, PROCUREMENT OF SUBSTITUTE GOODS OR SERVICES; LOSS OF USE, DATA, OR PROFITS; OR BUSINESS INTERRUPTION) HOWEVER CAUSED AND ON ANY THEORY OF LIABILITY, WHETHER IN CONTRACT, STRICT LIABILITY, OR TORT (INCLUDING NEGLIGENCE OR OTHERWISE) ARISING IN ANY WAY OUT OF THE USE OF THIS SOFTWARE, EVEN IF ADVISED OF THE POSSIBILITY OF SUCH DAMAGE.

---- Part 9: ScienceLogic, LLC copyright notice (BSD) -----

Copyright (c) 2009, ScienceLogic, LLC

All rights reserved.

Redistribution and use in source and binary forms, with or without modification, are permitted provided that the following conditions are met:

* Redistributions of source code must retain the above copyright notice, this list of conditions and the following disclaimer.
* Redistributions in binary form must reproduce the above copyright notice, this list of conditions and the following disclaimer in the documentation and/or other materials provided with the distribution.
* Neither the name of ScienceLogic, LLC nor the names of its contributors may be used to endorse or promote products derived from this software without specific prior written permission.

THIS SOFTWARE IS PROVIDED BY THE COPYRIGHT HOLDERS AND CONTRIBUTORS "AS IS" AND ANY EXPRESS OR IMPLIED WARRANTIES, INCLUDING, BUT NOT LIMITED TO, THE

IMPLIED WARRANTIES OF MERCHANTABILITY AND FITNESS FOR A PARTICULAR PURPOSE ARE DISCLAIMED. IN NO EVENT SHALL THE COPYRIGHT HOLDERS OR CONTRIBUTORS BE LIABLE FOR ANY DIRECT, INDIRECT, INCIDENTAL, SPECIAL, EXEMPLARY, OR CONSEQUENTIAL DAMAGES (INCLUDING, BUT NOT LIMITED TO, PROCUREMENT OF SUBSTITUTE GOODS OR SERVICES; LOSS OF USE, DATA, OR PROFITS; OR BUSINESS INTERRUPTION) HOWEVER CAUSED AND ON ANY THEORY OF LIABILITY, WHETHER IN CONTRACT, STRICT LIABILITY, OR TORT (INCLUDING NEGLIGENCE OR OTHERWISE) ARISING IN ANY WAY OUT OF THE USE OF THIS SOFTWARE, EVEN IF ADVISED OF THE POSSIBILITY OF SUCH DAMAGE.

LEADTOOLS

Copyright (C) 1991-2009 LEAD Technologies, Inc.

CMap Resources

Copyright 1990-2009 Adobe Systems Incorporated.
All rights reserved.

Copyright 1990-2010 Adobe Systems Incorporated.
All rights reserved.

Redistribution and use in source and binary forms, with or without modification, are permitted provided that the following conditions are met:

Redistributions of source code must retain the above copyright notice, this list of conditions and the following disclaimer.

Redistributions in binary form must reproduce the above copyright notice, this list of conditions and the following disclaimer in the documentation and/or other materials provided with the distribution.

Neither the name of Adobe Systems Incorporated nor the names of its contributors may be used to endorse or promote products derived from this software without specific prior written permission.

THIS SOFTWARE IS PROVIDED BY THE COPYRIGHT HOLDERS AND CONTRIBUTORS "AS IS" AND ANY EXPRESS OR IMPLIED WARRANTIES, INCLUDING, BUT NOT LIMITED TO, THE IMPLIED WARRANTIES OF MERCHANTABILITY AND FITNESS FOR A PARTICULAR PURPOSE ARE DISCLAIMED. IN NO EVENT SHALL THE COPYRIGHT HOLDER OR CONTRIBUTORS BE LIABLE FOR ANY DIRECT, INDIRECT, INCIDENTAL, SPECIAL, EXEMPLARY, OR CONSEQUENTIAL DAMAGES (INCLUDING, BUT NOT LIMITED TO, PROCUREMENT OF SUBSTITUTE GOODS OR SERVICES; LOSS OF USE, DATA, OR PROFITS; OR BUSINESS INTERRUPTION) HOWEVER CAUSED AND ON ANY THEORY OF LIABILITY, WHETHER IN CONTRACT, STRICT LIABILITY, OR TORT (INCLUDING NEGLIGENCE OR

OTHERWISE) ARISING IN ANY WAY OUT OF THE USE OF THIS
SOFTWARE, EVEN IF ADVISED OF THE POSSIBILITY OF SUCH DAMAGE.

MIT License

Copyright (c) 1998, 1999, 2000 Thai Open Source Software Center Ltd

Permission is hereby granted, free of charge, to any person obtaining a copy of this software and associated documentation files (the "Software"), to deal in the Software without restriction, including without limitation the rights to use, copy, modify, merge, publish, distribute, sublicense, and/or sell copies of the Software, and to permit persons to whom the Software is furnished to do so, subject to the following conditions:

The above copyright notice and this permission notice shall be included in all copies or substantial portions of the Software.

THE SOFTWARE IS PROVIDED "AS IS", WITHOUT WARRANTY OF ANY KIND, EXPRESS OR IMPLIED, INCLUDING BUT NOT LIMITED TO THE WARRANTIES OF MERCHANTABILITY, FITNESS FOR A PARTICULAR PURPOSE AND NONINFRINGEMENT. IN NO EVENT SHALL THE AUTHORS OR COPYRIGHT HOLDERS BE LIABLE FOR ANY CLAIM, DAMAGES OR OTHER LIABILITY, WHETHER IN AN ACTION OF CONTRACT, TORT OR OTHERWISE, ARISING FROM, OUT OF OR IN CONNECTION WITH THE SOFTWARE OR THE USE OR OTHER DEALINGS IN THE SOFTWARE.

Copyright 2000 Computing Research Labs, New Mexico State University

Copyright 2001-2015 Francesco Zappa Nardelli

Permission is hereby granted, free of charge, to any person obtaining a copy of this software and associated documentation files (the "Software"), to deal in the Software without restriction, including without limitation the rights to use, copy, modify, merge, publish, distribute, sublicense, and/or sell copies of the Software, and to permit persons to whom the Software is furnished to do so, subject to the following conditions:

The above copyright notice and this permission notice shall be included in all copies or substantial portions of the Software.

THE SOFTWARE IS PROVIDED "AS IS", WITHOUT WARRANTY OF ANY KIND, EXPRESS OR IMPLIED, INCLUDING BUT NOT LIMITED TO THE WARRANTIES OF MERCHANTABILITY, FITNESS FOR A PARTICULAR PURPOSE AND NONINFRINGEMENT. IN NO EVENT SHALL THE COMPUTING RESEARCH LAB OR NEW MEXICO STATE UNIVERSITY BE LIABLE FOR ANY CLAIM, DAMAGES OR OTHER LIABILITY, WHETHER IN AN ACTION OF CONTRACT, TORT OR OTHERWISE, ARISING FROM, OUT OF OR IN CONNECTION WITH THE SOFTWARE OR THE USE OR OTHER DEALINGS IN THE SOFTWARE.

Written by Joel Sherrill <joel@OARcorp.com>.

COPYRIGHT (c) 1989-2000.

On-Line Applications Research Corporation (OAR).

Permission to use, copy, modify, and distribute this software for any purpose without fee is hereby granted, provided that this entire notice is included in all copies of any software which is or includes a copy or modification of this software.

THIS SOFTWARE IS BEING PROVIDED "AS IS", WITHOUT ANY EXPRESS OR IMPLIED WARRANTY. IN PARTICULAR, THE AUTHOR MAKES NO REPRESENTATION OR WARRANTY OF ANY KIND CONCERNING THE MERCHANTABILITY OF THIS SOFTWARE OR ITS FITNESS FOR ANY PARTICULAR PURPOSE.

(1) Red Hat Incorporated

Copyright (c) 1994-2009 Red Hat, Inc. All rights reserved.

This copyrighted material is made available to anyone wishing to use, modify, copy, or redistribute it subject to the terms and conditions of the BSD License. This program is distributed in the hope that it will be useful, but WITHOUT ANY WARRANTY expressed or implied, including the implied warranties of MERCHANTABILITY or FITNESS FOR A PARTICULAR PURPOSE. A copy of this license is available at http://www.opensource.org/licenses. Any Red Hat trademarks that are incorporated in the source code or documentation are not subject to the BSD License and may only be used or replicated with the express permission of Red Hat, Inc.

(2) University of California, Berkeley

Copyright (c) 1981-2000 The Regents of the University of California.

All rights reserved.

Redistribution and use in source and binary forms, with or without modification, are permitted provided that the following conditions are met:

* Redistributions of source code must retain the above copyright notice, this list of conditions and the following disclaimer.
* Redistributions in binary form must reproduce the above copyright notice, this list of conditions and the following disclaimer in the documentation and/or other materials provided with the distribution.
* Neither the name of the University nor the names of its contributors may be used to endorse or promote products derived from this software without specific prior written permission.

THIS SOFTWARE IS PROVIDED BY THE COPYRIGHT HOLDERS AND CONTRIBUTORS "AS IS" AND ANY EXPRESS OR IMPLIED WARRANTIES, INCLUDING, BUT NOT LIMITED TO, THE IMPLIED WARRANTIES OF MERCHANTABILITY AND FITNESS FOR A PARTICULAR PURPOSE ARE DISCLAIMED. IN NO EVENT SHALL THE COPYRIGHT OWNER OR CONTRIBUTORS BE LIABLE FOR ANY DIRECT, INDIRECT, INCIDENTAL, SPECIAL, EXEMPLARY, OR CONSEQUENTIAL DAMAGES (INCLUDING, BUT NOT LIMITED TO, PROCUREMENT OF SUBSTITUTE GOODS OR SERVICES; LOSS OF USE, DATA, OR PROFITS; OR BUSINESS INTERRUPTION) HOWEVER CAUSED AND ON ANY THEORY OF LIABILITY, WHETHER IN CONTRACT, STRICT LIABILITY, OR TORT (INCLUDING NEGLIGENCE OR OTHERWISE) ARISING IN ANY WAY OUT OF THE USE OF THIS SOFTWARE, EVEN IF ADVISED OF THE POSSIBILITY OF SUCH DAMAGE.

The FreeType Project LICENSE

2006-Jan-27

Copyright 1996-2002, 2006 by

David Turner, Robert Wilhelm, and Werner Lemberg

Introduction

==========

The FreeType Project is distributed in several archive packages; some of them may contain, in addition to the FreeType font engine, various tools and contributions which rely on, or relate to, the FreeType Project.

This license applies to all files found in such packages, and which do not fall under their own explicit license. The license affects thus the FreeType font engine, the test programs, documentation and makefiles, at the very least.

This license was inspired by the BSD, Artistic, and IJG (Independent JPEG Group) licenses, which all encourage inclusion and use of free software in commercial and freeware products alike. As a consequence, its main points are that:

o We don't promise that this software works. However, we will be interested in any kind of bug reports. (`as is' distribution)

o You can use this software for whatever you want, in parts or full form, without having to pay us. (`royalty-free' usage)

o You may not pretend that you wrote this software. If you use it, or only parts of it, in a program, you must acknowledge somewhere in your documentation that you have used the FreeType code. (`credits')

We specifically permit and encourage the inclusion of this software, with or without modifications, in commercial products.

We disclaim all warranties covering The FreeType Project and assume no liability related to The FreeType Project.

Finally, many people asked us for a preferred form for a credit/disclaimer to use in compliance with this license. We thus encourage you to use the following text:

"""

Portions of this software are copyright © <year> The FreeType

Project (www.freetype.org). All rights reserved.

"""

Please replace <year> with the value from the FreeType version you actually use.

Legal Terms

==========

0. Definitions

Throughout this license, the terms `package', `FreeType Project', and `FreeType archive' refer to the set of files originally distributed by the authors (David Turner, Robert Wilhelm, and Werner Lemberg) as the `FreeType Project', be they named as alpha, beta or final release.

`You' refers to the licensee, or person using the project, where `using' is a generic term including compiling the project's source code as well as linking it to form a `program' or `executable'.

This program is referred to as `a program using the FreeType engine'.

This license applies to all files distributed in the original FreeType Project, including all source code, binaries and documentation, unless otherwise stated in the file in its original, unmodified form as distributed in the original archive.

If you are unsure whether or not a particular file is covered by this license, you must contact us to verify this.

The FreeType Project is copyright (C) 1996-2000 by David Turner, Robert Wilhelm, and Werner Lemberg. All rights reserved except as specified below.

1. No Warranty

THE FREETYPE PROJECT IS PROVIDED `AS IS' WITHOUT WARRANTY OF ANY KIND, EITHER EXPRESS OR IMPLIED, INCLUDING, BUT NOT LIMITED TO, WARRANTIES OF MERCHANTABILITY AND FITNESS FOR A PARTICULAR PURPOSE. IN NO EVENT WILL ANY OF THE AUTHORS OR COPYRIGHT HOLDERS BE LIABLE FOR ANY DAMAGES CAUSED BY THE USE OR THE INABILITY TO USE, OF THE FREETYPE PROJECT.

2. Redistribution

This license grants a worldwide, royalty-free, perpetual and irrevocable right and license to use, execute, perform, compile, display, copy, create derivative works of, distribute and sublicense the FreeType Project (in both source and object code forms) and derivative works thereof for any purpose; and to authorize others to exercise some or all of the rights granted herein, subject to the following conditions:

o Redistribution of source code must retain this license file (`FTL.TXT') unaltered; any additions, deletions or changes to the original files must be clearly indicated in accompanying documentation. The copyright notices of the unaltered, original files must be preserved in all copies of source files.

o Redistribution in binary form must provide a disclaimer that states that the software is based in part of the work of the FreeType Team, in the distribution documentation. We also encourage you to put an URL to the FreeType web page in your documentation, though this isn't mandatory.

These conditions apply to any software derived from or based on the FreeType Project, not just the unmodified files. If you use our work, you must acknowledge us. However, no fee need be paid to us.

3. Advertising

Neither the FreeType authors and contributors nor you shall use the name of the other for commercial, advertising, or promotional purposes without specific prior written permission.

We suggest, but do not require, that you use one or more of the following phrases to refer to this software in your documentation or advertising materials: `FreeType Project', `FreeType Engine', `FreeType library', or `FreeType Distribution'.

As you have not signed this license, you are not required to accept it. However, as the FreeType Project is copyrighted material, only this license, or another one contracted with the authors, grants you the right to use, distribute, and modify it.

Therefore, by using, distributing, or modifying the FreeType Project, you indicate that you understand and accept all the terms of this license.

4. Contacts

There are two mailing lists related to FreeType:

o freetype@nongnu.org

Discusses general use and applications of FreeType, as well as future and wanted additions to the library and distribution.

If you are looking for support, start in this list if you haven't found anything to help you in the documentation.

o freetype-devel@nongnu.org

Discusses bugs, as well as engine internals, design issues, specific licenses, porting, etc.

Our home page can be found at

http://www.freetype.org

--- end of FTL.TXT ---

The TWAIN Toolkit is distributed as is. The developer and distributors of the TWAIN Toolkit expressly disclaim all implied, express or statutory warranties including, without limitation, the implied warranties of merchantability, noninfringement of third party rights and fitness for a particular purpose. Neither the developers nor the distributors will be liable for damages, whether direct, indirect, special, incidental, or consequential, as a result of the reproduction, modification, distribution or other use of the TWAIN Toolkit.

JSON for Modern C++

Copyright (c) 2013-2017 Niels Lohmann

Permission is hereby granted, free of charge, to any person obtaining a copy of this software and associated documentation files (the "Software"), to deal in the Software without restriction, including without limitation the rights to use, copy, modify, merge, publish, distribute, sublicense, and/or sell copies of the Software, and to permit persons to whom the Software is furnished to do so, subject to the following conditions:

The above copyright notice and this permission notice shall be included in all copies or substantial portions of the Software.

THE SOFTWARE IS PROVIDED "AS IS", WITHOUT WARRANTY OF ANY KIND, EXPRESS OR IMPLIED, INCLUDING BUT NOT LIMITED TO THE WARRANTIES OF MERCHANTABILITY, FITNESS FOR A PARTICULAR PURPOSE AND NONINFRINGEMENT. IN NO EVENT SHALL THE AUTHORS OR COPYRIGHT HOLDERS BE LIABLE FOR ANY CLAIM, DAMAGES OR OTHER LIABILITY, WHETHER IN AN ACTION OF CONTRACT, TORT OR OTHERWISE, ARISING FROM, OUT OF OR IN CONNECTION WITH THE SOFTWARE OR THE USE OR OTHER DEALINGS IN THE SOFTWARE.

Copyright (c) 2011 - 2015 ARM LIMITED

All rights reserved.

Redistribution and use in source and binary forms, with or without modification, are permitted provided that the following conditions are met:

- Redistributions of source code must retain the above copyright notice, this list of conditions and the following disclaimer.

- Redistributions in binary form must reproduce the above copyright notice, this list of conditions and the following disclaimer in the documentation and/or other materials provided with the distribution.
- Neither the name of ARM nor the names of its contributors may be used to endorse or promote products derived from this software without specific prior written permission.

THIS SOFTWARE IS PROVIDED BY THE COPYRIGHT HOLDERS AND CONTRIBUTORS "AS IS" AND ANY EXPRESS OR IMPLIED WARRANTIES, INCLUDING, BUT NOT LIMITED TO, THE IMPLIED WARRANTIES OF MERCHANTABILITY AND FITNESS FOR A PARTICULAR PURPOSE ARE DISCLAIMED. IN NO EVENT SHALL COPYRIGHT HOLDERS AND CONTRIBUTORS BE LIABLE FOR ANY DIRECT, INDIRECT, INCIDENTAL, SPECIAL, EXEMPLARY, OR CONSEQUENTIAL DAMAGES (INCLUDING, BUT NOT LIMITED TO, PROCUREMENT OF SUBSTITUTE GOODS OR SERVICES; LOSS OF USE, DATA, OR PROFITS; OR BUSINESS INTERRUPTION) HOWEVER CAUSED AND ON ANY THEORY OF LIABILITY, WHETHER IN CONTRACT, STRICT LIABILITY, OR TORT (INCLUDING NEGLIGENCE OR OTHERWISE) ARISING IN ANY WAY OUT OF THE USE OF THIS SOFTWARE, EVEN IF ADVISED OF THE POSSIBILITY OF SUCH DAMAGE.

Copyright (c) 2014, Kenneth MacKay

All rights reserved.

Redistribution and use in source and binary forms, with or without modification, are permitted provided that the following conditions are met:

* Redistributions of source code must retain the above copyright notice, this list of conditions and the following disclaimer.
* Redistributions in binary form must reproduce the above copyright notice, this list of conditions and the following disclaimer in the documentation and/or other materials provided with the distribution.

THIS SOFTWARE IS PROVIDED BY THE COPYRIGHT HOLDERS AND CONTRIBUTORS "AS IS" AND ANY EXPRESS OR IMPLIED WARRANTIES, INCLUDING, BUT NOT LIMITED TO, THE IMPLIED WARRANTIES OF MERCHANTABILITY AND FITNESS FOR A PARTICULAR PURPOSE ARE DISCLAIMED. IN NO EVENT SHALL THE COPYRIGHT HOLDER OR CONTRIBUTORS BE LIABLE FOR ANY DIRECT, INDIRECT, INCIDENTAL, SPECIAL, EXEMPLARY, OR CONSEQUENTIAL DAMAGES (INCLUDING, BUT NOT LIMITED TO, PROCUREMENT OF SUBSTITUTE GOODS OR SERVICES; LOSS OF USE, DATA, OR PROFITS; OR BUSINESS INTERRUPTION) HOWEVER CAUSED AND ON ANY THEORY OF LIABILITY, WHETHER IN CONTRACT, STRICT LIABILITY, OR TORT (INCLUDING NEGLIGENCE OR OTHERWISE) ARISING IN ANY WAY OUT OF THE USE OF THIS SOFTWARE, EVEN IF ADVISED OF THE POSSIBILITY OF SUCH DAMAGE.

Copyright (c) 2006, CRYPTOGAMS by <appro@openssl.org> All rights reserved.

Redistribution and use in source and binary forms, with or without modification, are permitted provided that the following conditions are met:

* Redistributions of source code must retain copyright notices, this list of conditions and the following disclaimer.
* Redistributions in binary form must reproduce the above copyright notice, this list of conditions and the following disclaimer in the documentation and/or other materials provided with the distribution.
* Neither the name of the CRYPTOGAMS nor the names of its copyright holder and contributors may be used to endorse or promote products derived from this software without specific prior written permission.

ALTERNATIVELY, provided that this notice is retained in full, this product may be distributed under the terms of the GNU General Public License (GPL), in which case the provisions of the GPL apply INSTEAD OF those given above.

THIS SOFTWARE IS PROVIDED BY THE COPYRIGHT HOLDER AND CONTRIBUTORS "AS IS" AND ANY EXPRESS OR IMPLIED WARRANTIES, INCLUDING, BUT NOT LIMITED TO, THE IMPLIED WARRANTIES OF MERCHANTABILITY AND FITNESS FOR A PARTICULAR PURPOSE ARE DISCLAIMED. IN NO EVENT SHALL THE COPYRIGHT OWNER OR CONTRIBUTORS BE LIABLE FOR ANY DIRECT, INDIRECT, INCIDENTAL, SPECIAL, EXEMPLARY, OR CONSEQUENTIAL DAMAGES (INCLUDING, BUT NOT LIMITED TO, PROCUREMENT OF SUBSTITUTE GOODS OR SERVICES; LOSS OF USE, DATA, OR PROFITS; OR BUSINESS INTERRUPTION) HOWEVER CAUSED AND ON ANY THEORY OF LIABILITY, WHETHER IN CONTRACT, STRICT LIABILITY, OR TORT (INCLUDING NEGLIGENCE OR OTHERWISE) ARISING IN ANY WAY OUT OF THE USE OF THIS SOFTWARE, EVEN IF ADVISED OF THE POSSIBILITY OF SUCH DAMAGE.

ISC License

Copyright (c) 2013-2017

Frank Denis <j at pureftpd dot org>

Permission to use, copy, modify, and/or distribute this software for any purpose with or without fee is hereby granted, provided that the above copyright notice and this permission notice appear in all copies.

THE SOFTWARE IS PROVIDED "AS IS" AND THE AUTHOR DISCLAIMS ALL WARRANTIES WITH REGARD TO THIS SOFTWARE INCLUDING ALL IMPLIED WARRANTIES OF MERCHANTABILITY AND FITNESS. IN NO EVENT SHALL THE AUTHOR BE LIABLE FOR ANY SPECIAL, DIRECT, INDIRECT, OR CONSEQUENTIAL DAMAGES OR ANY DAMAGES WHATSOEVER RESULTING FROM LOSS OF USE, DATA OR PROFITS, WHETHER IN AN ACTION OF CONTRACT, NEGLIGENCE OR OTHER TORTIOUS ACTION, ARISING OUT OF OR IN CONNECTION WITH THE USE OR PERFORMANCE OF THIS SOFTWARE.

Copyright (c) 2008 The NetBSD Foundation, Inc.

All rights reserved.

This code is derived from software contributed to The NetBSD Foundation
by Lennart Augustsson (lennart@augustsson.net) at
Carlstedt Research & Technology.

Redistribution and use in source and binary forms, with or without
modification, are permitted provided that the following conditions
are met:

1. Redistributions of source code must retain the above copyright notice, this list of conditions and the following disclaimer.
2. Redistributions in binary form must reproduce the above copyright notice, this list of conditions and the following disclaimer in the documentation and/or other materials provided with the distribution.

THIS SOFTWARE IS PROVIDED BY THE NETBSD FOUNDATION, INC. AND CONTRIBUTORS ``AS IS'' AND ANY EXPRESS OR IMPLIED WARRANTIES, INCLUDING, BUT NOT LIMITED TO, THE IMPLIED WARRANTIES OF MERCHANTABILITY AND FITNESS FOR A PARTICULAR

PURPOSE ARE DISCLAIMED. IN NO EVENT SHALL THE FOUNDATION OR CONTRIBUTORS BE LIABLE FOR ANY DIRECT, INDIRECT, INCIDENTAL, SPECIAL, EXEMPLARY, OR CONSEQUENTIAL DAMAGES (INCLUDING, BUT NOT LIMITED TO, PROCUREMENT OF SUBSTITUTE GOODS OR SERVICES; LOSS OF USE, DATA, OR PROFITS; OR BUSINESS INTERRUPTION) HOWEVER CAUSED AND ON ANY THEORY OF LIABILITY, WHETHER IN CONTRACT, STRICT LIABILITY, OR TORT (INCLUDING NEGLIGENCE OR OTHERWISE) ARISING IN ANY WAY OUT OF THE USE OF THIS SOFTWARE, EVEN IF ADVISED OF THE POSSIBILITY OF SUCH DAMAGE.

Copyright (c) 2000 Intel Corporation

All rights reserved.

Redistribution and use in source and binary forms, with or without modification, are permitted provided that the following conditions are met:

* Redistributions of source code must retain the above copyright notice, this list of conditions and the following disclaimer.
* Redistributions in binary form must reproduce the above copyright notice, this list of conditions and the following disclaimer in the documentation and/or other materials provided with the distribution.
* Neither name of Intel Corporation nor the names of its contributors may be used to endorse or promote products derived from this software without specific prior written permission.

THIS SOFTWARE IS PROVIDED BY THE COPYRIGHT HOLDERS AND CONTRIBUTORS "AS IS" AND ANY EXPRESS OR IMPLIED WARRANTIES, INCLUDING, BUT NOT LIMITED TO, THE IMPLIED WARRANTIES OF MERCHANTABILITY AND FITNESS FOR A PARTICULAR PURPOSE ARE DISCLAIMED. IN NO EVENT SHALL INTEL OR CONTRIBUTORS BE LIABLE FOR ANY DIRECT, INDIRECT, INCIDENTAL, SPECIAL, EXEMPLARY, OR CONSEQUENTIAL DAMAGES (INCLUDING, BUT NOT LIMITED TO, PROCUREMENT OF SUBSTITUTE GOODS OR SERVICES; LOSS OF USE, DATA, OR PROFITS; OR BUSINESS INTERRUPTION) HOWEVER CAUSED AND ON ANY THEORY OF LIABILITY, WHETHER IN CONTRACT, STRICT LIABILITY, OR TORT (INCLUDING NEGLIGENCE OR OTHERWISE) ARISING IN ANY WAY OUT OF THE USE OF THIS SOFTWARE, EVEN IF ADVISED OF THE POSSIBILITY OF SUCH DAMAGE.

Lua

Copyright © 1994–2014 Lua.org, PUC-Rio.

Permission is hereby granted, free of charge, to any person obtaining a copy of this software and associated
documentation files (the "Software"), to deal in the Software without restriction, including without limitation the
rights to use, copy, modify, merge, publish, distribute, sublicense, and/or sell copies of the Software, and to
permit persons to whom the Software is furnished to do so, subject to the following conditions:

The above copyright notice and this permission notice shall be included in all copies or substantial portions of
the Software.

THE SOFTWARE IS PROVIDED "AS IS", WITHOUT WARRANTY OF ANY KIND, EXPRESS OR IMPLIED,
INCLUDING BUT NOT LIMITED TO THE WARRANTIES OF MERCHANTABILITY, FITNESS FOR A PARTICULAR PURPOSE AND NONINFRINGEMENT. IN NO EVENT SHALL THE AUTHORS OR COPYRIGHT HOLDERS BE LIABLE FOR ANY CLAIM, DAMAGES OR OTHER LIABILITY, WHETHER IN AN
ACTION OF CONTRACT, TORT OR OTHERWISE, ARISING FROM, OUT OF OR IN CONNECTION WITH
THE SOFTWARE OR THE USE OR OTHER DEALINGS IN THE SOFTWARE.

LuaSocket

LuaSocket 2.0.2 license
Copyright © 2004-2007 Diego Nehab

Permission is hereby granted, free of charge, to any person obtaining a
copy of this software and associated documentation files (the "Software"),
to deal in the Software without restriction, including without limitation
the rights to use, copy, modify, merge, publish, distribute, sublicense,
and/or sell copies of the Software, and to permit persons to whom the
Software is furnished to do so, subject to the following conditions:

The above copyright notice and this permission notice shall be included in
all copies or substantial portions of the Software.

THE SOFTWARE IS PROVIDED "AS IS", WITHOUT WARRANTY OF ANY KIND, EXPRESS OR IMPLIED, INCLUDING BUT NOT LIMITED TO THE WARRANTIES OF MERCHANTABILITY, FITNESS FOR A PARTICULAR PURPOSE AND NONINFRINGEMENT. IN NO EVENT SHALL THE AUTHORS OR COPYRIGHT HOLDERS BE LIABLE FOR ANY CLAIM, DAMAGES OR OTHER LIABILITY, WHETHER IN AN ACTION OF CONTRACT, TORT OR OTHERWISE, ARISING FROM, OUT OF OR IN CONNECTION WITH THE SOFTWARE OR THE USE OR OTHER DEALINGS IN THE SOFTWARE.

LuneScript

Copyright (c) 2018 ifritJP

Permission is hereby granted, free of charge, to any person obtaining a copy
of this software and associated documentation files (the "Software"), to deal
in the Software without restriction, including without limitation the rights
to use, copy, modify, merge, publish, distribute, sublicense, and/or sell
copies of the Software, and to permit persons to whom the Software is
furnished to do so, subject to the following conditions:

The above copyright notice and this permission notice shall be included in all
copies or substantial portions of the Software.

THE SOFTWARE IS PROVIDED "AS IS", WITHOUT WARRANTY OF ANY KIND, EXPRESS OR IMPLIED, INCLUDING BUT NOT LIMITED TO THE WARRANTIES OF MERCHANTABILITY, FITNESS FOR A PARTICULAR PURPOSE AND NONINFRINGEMENT. IN NO EVENT SHALL THE AUTHORS OR COPYRIGHT HOLDERS BE LIABLE FOR ANY CLAIM, DAMAGES OR OTHER LIABILITY, WHETHER IN AN ACTION OF CONTRACT, TORT OR OTHERWISE, ARISING FROM, OUT OF OR IN CONNECTION WITH THE SOFTWARE OR THE USE OR OTHER DEALINGS IN THE SOFTWARE.

Copyright (c) 1998, 1999, 2000 Thai Open Source Software Center Ltd
and Clark Cooper

Copyright (c) 2001, 2002, 2003, 2004, 2005, 2006 Expat maintainers.

Permission is hereby granted, free of charge, to any person obtaining a copy of this software and associated
documentation files (the "Software"), to deal in the Software without restriction, including without limitation the
rights to use, copy, modify, merge, publish, distribute, sublicense, and/or sell copies of the Software, and to
permit persons to whom the Software is furnished to do so, subject to the following conditions:
The above copyright notice and this permission notice shall be included in all copies or substantial portions of
the Software.

THE SOFTWARE IS PROVIDED "AS IS", WITHOUT WARRANTY OF ANY KIND, EXPRESS OR IMPLIED,
INCLUDING BUT NOT LIMITED TO THE WARRANTIES OF MERCHANTABILITY, FITNESS FOR A PARTICULAR PURPOSE AND NONINFRINGEMENT. IN NO EVENT SHALL THE AUTHORS OR COPYRIGHT HOLDERS BE LIABLE FOR ANY CLAIM, DAMAGES OR OTHER LIABILITY, WHETHER IN AN
ACTION OF CONTRACT, TORT OR OTHERWISE, ARISING FROM, OUT OF OR IN CONNECTION WITH
THE SOFTWARE OR THE USE OR OTHER DEALINGS IN THE SOFTWARE.

Copyright 2004--2007, Google Inc.

Redistribution and use in source and binary forms, with or without modification, are permitted provided that the
following conditions are met:

1. Redistributions of source code must retain the above copyright notice, this list of conditions and the following
disclaimer.

2. Redistributions in binary form must reproduce the above copyright notice, this list of conditions and the following disclaimer in the documentation and/or other materials provided with the distribution.

3. The name of the author may not be used to endorse or promote products derived from this software without
specific prior written permission.

THIS SOFTWARE IS PROVIDED BY THE AUTHOR ``AS IS'' AND ANY EXPRESS OR IMPLIED WARRANTIES, INCLUDING, BUT NOT LIMITED TO, THE IMPLIED WARRANTIES OF MERCHANTABILITY
AND FITNESS FOR A PARTICULAR PURPOSE ARE DISCLAIMED. IN NO EVENT SHALL THE AUTHOR
BE LIABLE FOR ANY DIRECT, INDIRECT, INCIDENTAL, SPECIAL, EXEMPLARY, OR CONSEQUENTIAL
DAMAGES (INCLUDING, BUT NOT LIMITED TO, PROCUREMENT OF SUBSTITUTE GOODS OR SERVICES; LOSS OF USE, DATA, OR PROFITS; OR BUSINESS INTERRUPTION) HOWEVER CAUSED
AND ON ANY THEORY OF LIABILITY, WHETHER IN CONTRACT, STRICT LIABILITY, OR TORT (INCLUDING NEGLIGENCE OR OTHERWISE) ARISING IN ANY WAY OUT OF THE USE OF THIS SOFTWARE, EVEN IF ADVISED OF THE POSSIBILITY OF SUCH DAMAGE.

The certificate files "Amazon Root CA 1", "Amazon Root CA 2", "Amazon Root CA 4" are licensed under a Creative Commons Attribution-NoDerivatives 4.0 International License.

The following applies only to products supporting Wi-Fi.

(c) 2009-2013 by Jeff Mott. All rights reserved.

Redistribution and use in source and binary forms, with or without modification, are permitted provided that the following conditions are met:

* Redistributions of source code must retain the above copyright notice, this list of conditions, and the following disclaimer.
* Redistributions in binary form must reproduce the above copyright notice, this list of conditions, and the following disclaimer in the documentation or other materials provided with the distribution.
* Neither the name CryptoJS nor the names of its contributors may be used to endorse or promote products derived from this software without specific prior written permission.

THIS SOFTWARE IS PROVIDED BY THE COPYRIGHT HOLDERS AND CONTRIBUTORS "AS IS," AND ANY EXPRESS OR IMPLIED WARRANTIES, INCLUDING, BUT NOT LIMITED TO, THE IMPLIED WARRANTIES OF MERCHANTABILITY AND FITNESS FOR A PARTICULAR PURPOSE, ARE DISCLAIMED. IN NO EVENT SHALL THE COPYRIGHT HOLDER OR CONTRIBUTORS BE LIABLE FOR ANY DIRECT, INDIRECT, INCIDENTAL, SPECIAL, EXEMPLARY, OR CONSEQUENTIAL DAMAGES (INCLUDING, BUT NOT LIMITED TO, PROCUREMENT OF SUBSTITUTE GOODS OR SERVICES; LOSS OF USE, DATA, OR PROFITS; OR BUSINESS INTERRUPTION) HOWEVER CAUSED AND ON ANY THEORY OF LIABILITY, WHETHER IN CONTRACT, STRICT LIABILITY, OR TORT (INCLUDING NEGLIGENCE OR OTHERWISE) ARISING IN ANY WAY OUT OF THE USE OF THIS SOFTWARE, EVEN IF ADVISED OF THE POSSIBILITY OF SUCH DAMAGE.

Network

Available Connection Methods

The following connection methods are available on the printer.

- **Wireless Connection**

  Connect the printer and devices (e.g. computer/smartphone/tablet) using a wireless router.

  If you have a wireless router, we recommend you use one for wireless connection.

  - Connection methods vary depending on the wireless router type.
  - You can change network settings such as the network name (SSID) and security protocol on the printer.
  - When the connection between a device and a wireless router is completed and (Wi-Fi icon) is displayed in the device's screen, you can connect the device to the printer using the wireless router.

- **Wireless Direct**

  Connect the printer and devices (e.g. computer/smartphone/tablet) without using a wireless router.

  - While you are using the printer with Wireless Direct, Internet connection from the printer becomes unavailable. In that case, web services for the printer cannot be used.
  - If you connect a device connected to the Internet via a wireless router to the printer that is in the Wireless Direct, the connection between the device and wireless router will be disabled. In that case, the connection of the device may switch to a mobile data connection automatically depending on your device. Transmission fees for connecting to the Internet using a mobile data connection apply.
  - In the Wireless Direct, you can connect up to five devices at the same time. If you try to connect a sixth device while five devices are already connected, an error will appear. If an error appears, disconnect a device you do not use and configure settings again.
  - Network settings such as the network name (SSID) and security protocol are specified automatically.

  Note

  - You can connect the printer and computer using a USB cable (USB connection). Prepare a USB cable. For details, see Connects to Another Computer via LAN/Changes from USB to LAN Connection.

Network Connection Settings/Setup

Perform connection setup for the printer and computer/smartphone/tablet.

For more on setup procedure, click here.

Changing Network Settings

See below for changing connection settings for the printer and computer/smartphone/tablet.

- To change network connection method:
  - ➡ Reconfiguration Method of Wi-Fi Connection
  - ➡ Changing the Connection Mode
- To add computer/smartphone/tablet to the printer:
  - ➡ Connects to Another Computer via LAN/Changes from USB to LAN Connection
- To use Wireless Direct temporarily:
  - ➡ Connecting with Wireless Direct

IJ Network Device Setup Utility

IJ Network Device Setup Utility checks or diagnoses the settings of the printer and those of computer and restores the status of them if anything is wrong with network connection. Select either link below to download IJ Network Device Setup Utility.

➡ Checking Printer Connection Status Using IJ Network Device Setup Utility

- Performing/Changing Network Settings (Windows)

  For Windows, you can perform network settings using IJ Network Device Setup Utility.

  - ➡ IJ Network Device Setup Utility (Windows)
- Diagnosing and Repairing Network Settings (Windows/macOS)

  You can diagnose or repair network settings using IJ Network Device Setup Utility.

  - **For Windows:**
    - ➡ IJ Network Device Setup Utility (Windows)
  - **For macOS:**
    - ➡ IJ Network Device Setup Utility (macOS)

Network Connection Tips

See below for tips on using the printer via network connection.

➡ Network Connection Tips
➡ Handling Printer Configuration using the Web Browser
➡ Countermeasures against Unauthorized Access

Troubleshooting

See Network Settings and Common Problems for troubleshooting on network connection.

Notice/Restriction

See below for details.

- Restrictions on network settings:
  - ➡ Restrictions
- Notices when printing using web service:
  - ➡ Notice for Web Service Printing

Restrictions

When connecting another device while a device (such as a computer) is already connected to the printer, connect it using the same connection method as the connected device.
If you connect using a different connection method, the connection to the device in use will be disabled.

Connect via wireless router

- Make sure your device and the wireless router are connected. For details on checking these settings, see the manual supplied with the wireless router or contact its manufacturer.
  As for a device already connected to the printer without using a wireless router, reconnect it via a wireless router.
- Configuration, router functions, setup procedures and security settings of wireless routers vary depending on the system environment. For details, see the manual for your wireless router or contact its manufacturer.
- This printer does not support IEEE802.11ac, IEEE802.11a, or IEEE802.11n (5 GHz). Check if your device supports IEEE802.11n (2.4 GHz), IEEE802.11g or IEEE802.11b.
- If your device is set to the "IEEE802.11n only" mode, WEP or TKIP cannot be used as a security protocol. Change the security protocol for your device to something other than WEP and TKIP or change the setting to something other than "IEEE802.11n only."
  The connection between your device and the wireless router will be temporarily disabled while the setting is changed. Do not proceed to the next screen of this guide until setup is complete.
- For office use, consult your network administrator.
- Note that if you connect to a network with no security protection, your personal information could be disclosed to a third party.

Wireless Direct

Important

- If a device is connected to the Internet via a wireless router, and you then connect it to a printer in Wireless Direct mode, the existing connection between the device and wireless router will be disabled. In that case, the connection of the device may switch to a mobile data connection automatically depending on your device. When you connect to the Internet using a mobile data connection, charges may apply depending on your contract.
  - When you connect a device and the printer using Wireless Direct, the connection information will be saved to Wi-Fi settings. The device may be connected to the printer automatically even after disconnecting it or connecting it to another wireless router.
  - To prevent automatic connection to the printer in Wireless Direct mode, change the connection mode after using the printer, or set not to connect automatically in the Wi-Fi settings of the device.
    For details on changing the settings of your device, see the manual supplied with the device or contact its manufacturer.

- If you connect a device and the printer using Wireless Direct, Internet connection may become unavailable depending on your environment. In that case, web services for the printer cannot be used.

- In Wireless Direct mode, you can connect up to five devices at the same time. If you try to connect a sixth device while five devices are already connected, an error will appear.
  If an error appears, disconnect a device that does not use the printer, and then redo the settings.
- Devices connected to the printer using Wireless Direct cannot communicate with each other.
- Firmware updates for the printer are not available while using Wireless Direct.
- When a device has been connected to the printer without using a wireless router and you want to set it up again using the same connection method, disconnect it first. Disable the connection between the device and printer in the Wi-Fi setting screen.

Network Connection Tips

- Default Network Settings
- Detect Same Printer Name
- Connects to Another Computer via LAN/Changes from USB to LAN Connection
- Printing Network Settings
- Reconfiguration Method of Wi-Fi Connection
- Connecting with Wireless Direct

Default Network Settings

LAN Connection Defaults

Item	Default
Network name (SSID)	BJNPSETUP
Wi-Fi security	Disable
IP address (IPv4)	**Auto setup**
IP address (IPv6)	Auto setup
Set printer name*	XXXXXXXXXXXX
Enable/disable IPv6	**Enable**
Enable/disable WSD	**Enable**
Timeout setting	**15 minutes**
Enable/disable Bonjour	**Enable**
Service name	Canon TR7600 series
LPR protocol settings	**Enable**
RAW protocol	**Enable**
LLMNR	**Enable**
PictBridge communication	**Enable**

("XX" represents alphanumeric characters.)

* Default value depends on printer. To check value, use operation panel.

➡ LAN settings

Wireless Direct Defaults

Item	Default
Network name (SSID)	DIRECT-abXX-TR7600series *1
Password	YYYYYYYYYY *2
Wi-Fi security	**WPA2-PSK (AES)**
Connection request confirmation	Displayed

*1 "ab" is specified at random and "XX" represents last two digits of printer's MAC address. (The value is specified when the printer is turned on for the first time.)

*2 The password is specified automatically when the printer is turned on for the first time.

Detect Same Printer Name

When the printer is detected during setup, plural printers with the same name may appear on the results screen.

Select a printer with checking the printer settings against those on detection result screen.

- **For Windows:**

  Check the printer's MAC address or serial to select the correct printer from the results.

- **For macOS:**

  The printer names appear with the MAC address added at the end or as the printer name specified by Bonjour.

  Check identifiers such as the MAC address, the printer name specified by Bonjour, and the printer's serial number to select the printer from among those that appear.

Note

- Serial number may not appear on result screen.

To check the printer's MAC address and the serial number, print out the network settings information.

➡ Printing Network Settings

Note

- You can check the printer's MAC address and the serial number by displaying on the touch screen.

  ➡ System information

Connects to Another Computer via LAN/Changes from USB to LAN Connection

To connect an additional computer to the printer via LAN, or to change from USB to LAN connection, click here and perform setup.

Printing Network Settings

Use the operation panel to print the printer's current network settings.

Important

- The network settings printout contains important information about your network. Handle it with care.

1. Check that printer is turned on.

   If the HOME screen is not displayed, press the **HOME** button.

2. Load three sheets of A4 or Letter-sized plain paper.

3. Select (**Setup**) on HOME screen.

4. Select **Device settings**.

5. Select **LAN settings**.

6. Select **Print details**.

7. Check message and select **Yes**.

8. When the confirmation screen for printing passwords appears, select **ON** or **OFF**.

   The printer starts printing the network setting information.

The following information on the printer's network setting is printed out. (Some setting values are not displayed depending on the printer settings.)

Item Number	Item	Description	Setting
1	Product Information	Product information	–
1-1	Product Name	Product name	XXXXXXXX
1-2	ROM Version	ROM version	XXXXXXXX
1-3	Serial Number	Serial number	XXXXXXXX
2	Network Diagnostics	Network diagnostics	–
2-1	Diagnostic Result	Diagnostic result	XXXXXXXX
2-2	Result Codes	Result codes	XXXXXXXX
2-3	Result Code Details	Result code details	http://canon.com/ijnwt
3	Wireless LAN	Wireless LAN	Enable/Disable

3-2	Infrastructure	Infrastructure	Enable/Disable
3-2-1	Signal Strength	Signal strength	0 to 100 [%]
3-2-2	Link Quality	Link quality	0 to 100 [%]
3-2-3	Frequency	Frequency	XX (GHz)
3-2-4	MAC Address	MAC address	XX:XX:XX:XX:XX:XX
3-2-5	Connection	Connection status	Active/Inactive
3-2-6	SSID	SSID	Wireless LAN network name (SSID)
3-2-7	Channel	Channel	XXX (1 to 13)
3-2-8	Encryption	Encryption method	None/WEP/TKIP/AES
3-2-9	WEP Key Length	WEP key length (bits)	Inactive/128/64
3-2-10	Authentication	Authentication method	None/auto/open/shared/WPA-PSK/WPA2-PSK
3-2-11	TCP/IPv4	TCP/IPv4	Enable/Disable
3-2-12	IP Address	IP address	XXX.XXX.XXX.XXX
3-2-13	Subnet Mask	Subnet mask	XXX.XXX.XXX.XXX
3-2-14	Default Gateway	Default gateway	XXX.XXX.XXX.XXX
3-2-15	TCP/IPv6	TCP/IPv6	Enable/Disable
3-2-16	Link Local Address	Link local address	XXXX:XXXX:XXXX:XXXX XXXX:XXXX:XXXX:XXXX
3-2-17	Link Local Prefix Length	Link local prefix length	XXX
3-2-18	Stateless Address1	Stateless address 1	XXXX:XXXX:XXXX:XXXX XXXX:XXXX:XXXX:XXXX
3-2-19	Stateless Prefix Length1	Stateless prefix length 1	XXX
3-2-20	Stateless Address2	Stateless address 2	XXXX:XXXX:XXXX:XXXX XXXX:XXXX:XXXX:XXXX
3-2-21	Stateless Prefix Length2	Stateless prefix length 2	XXX
3-2-22	Stateless Address3	Stateless address 3	XXXX:XXXX:XXXX:XXXX XXXX:XXXX:XXXX:XXXX
3-2-23	Stateless Prefix Length3	Stateless prefix length 3	XXX

3-2-24	Stateless Address4	Stateless address 4	XXXX:XXXX:XXXX:XXXX XXXX:XXXX:XXXX:XXXX
3-2-25	Stateless Prefix Length4	Stateless prefix length 4	XXX
3-2-26	Default Gateway1	Default gateway 1	XXXX:XXXX:XXXX:XXXX XXXX:XXXX:XXXX:XXXX
3-2-27	Default Gateway2	Default gateway 2	XXXX:XXXX:XXXX:XXXX XXXX:XXXX:XXXX:XXXX
3-2-28	Default Gateway3	Default gateway 3	XXXX:XXXX:XXXX:XXXX XXXX:XXXX:XXXX:XXXX
3-2-29	Default Gateway4	Default gateway 4	XXXX:XXXX:XXXX:XXXX XXXX:XXXX:XXXX:XXXX
3-2-33	IPsec	IPsec setting	Active/Inactive
3-2-34	Security Protocol	Security method	ESP/ESP & AH/AH/Blank (Not selected)
3-3	Wireless Direct	Operation mode for Wireless Direct	Enable/Disable
3-3-1	MAC Address	MAC address	XX:XX:XX:XX:XX:XX
3-3-2	Connection	Connection status	Active/Inactive
3-3-3	SSID	SSID	Wireless Direct network name (SSID)
3-3-4	Password	Password	Wireless Direct password
3-3-5	Channel	Channel	3
3-3-6	Encryption	Encryption method	AES
3-3-7	Authentication	Authentication method	WPA2-PSK
3-3-8	TCP/IPv4	TCP/IPv4	Enable/Disable
3-3-9	IP Address	IP address	XXX.XXX.XXX.XXX
3-3-10	Subnet Mask	Subnet mask	XXX.XXX.XXX.XXX
3-3-11	Default Gateway	Default gateway	XXX.XXX.XXX.XXX
3-3-12	TCP/IPv6	TCP/IPv6	Enable/Disable
3-3-13	Link Local Address	Link local address	XXXX:XXXX:XXXX:XXXX XXXX:XXXX:XXXX:XXXX
3-3-14	Link Local Prefix Length	Link local prefix length	XXX

3-3-15	IPsec	IPsec setting	Active/Inactive
3-3-16	Security Protocol	Security method	ESP/ESP & AH/AH/Blank (Not selected)
5	Other Settings	Other settings	–
5-1	Printer Name	Printer name	Printer name (Up to 15 alphanumeric characters)
5-2	Wireless Direct Dev-Name	Device name for wireless direct	Device name for wireless direct (Up to 32 alphanumeric characters)
5-4	WSD Printing	WSD printing setting	Enable/Disable
5-5	WSD Timeout	Timeout	1/5/10/15/20 [min]
5-6	LPD Printing	LPD printing setting	Enable/Disable
5-7	RAW Printing	RAW printing setting	Enable/Disable
5-9	Bonjour	Bonjour setting	Enable/Disable
5-10	Bonjour Service Name	Bonjour service name	Bonjour service name (Up to 52 alphanumeric characters)
5-11	LLMNR	LLMNR setting	Enable/Disable
5-12	SNMP	SNMP setting	Enable/Disable
5-13	PictBridge Commun.	PictBridge Communication	Enable/Disable
5-14	DNS Server	Obtain DNS server address automatically	Auto/Manual
5-15	Primary Server	Primary server address	XXX.XXX.XXX.XXX
5-16	Secondary Server	Secondary server address	XXX.XXX.XXX.XXX
5-17	Proxy Server	Proxy server setting	Enable/Disable
5-18	Proxy Address	Proxy address	XXXXXXXXXXXXXXXXXXXX
5-19	Proxy Port	Proxy port specification	1 to 65535
5-20	Cert. Fingerprt(SHA-1)	Certificate fingerprint(SHA-1)	xxxxxxxx xxxxxxxx xxxxxxxx xxxxxxxx xxxxxxxx
5-21	Cert. Fingerprt(SHA-256)	Certificate fingerprint(SHA-256)	xxxxxxxx xxxxxxxx xxxxxxxx xxxxxxxx xxxxxxxx xxxxxxxx xxxxxxxx xxxxxxxx
6	Bluetooth	Bluetooth settings	–
6-1	Bluetooth Setting	Bluetooth	Enable/Disable
6-3	Bluetooth Device Address	Bluetooth device address of the printer	XX:XX:XX:XX:XX:XX

6-5	Bluetooth Device Name	Bluetooth device name of the printer	XXXXXXXX
7	Web Services	Web Services	–
7-1	Unsent Usage Logs	Number of unsent usage logs	0 to 200
7-2	Usage Log Last Sent	Last date when usage log was sent	XXXXXXXX
7-3	Web Service Status	Registration status	Not set/Disabled/Registration pending/Registered
7-4	Log Transmission Status	Transmission result	Not activated/Processing/Server error/Connection error/Timeout error/Error/Awaiting server response/Active

("XX" represents alphanumeric characters.)

Reconfiguration Method of Wi-Fi Connection

Follow either procedure below to change Wi-Fi connection method (infrastructure or Wireless Direct).

- **For Windows:**
  - See Changing the Connection Mode.
  - Perform settings on the **Network Settings** screen on IJ Network Device Setup Utility.

Important

■ Before you perform settings using IJ Network Device Setup Utility, turn on Easy wireless connect mode on the printer following the procedure below.

1. Check that printer is turned on.
2. Select (**Wireless connect**) on HOME screen.

   ➡ Using Touch Screen

3. Select **Yes** on the displayed screen.

   Follow instructions on your computer, smartphone/tablet.

4. If message saying setup is completed appears, select **OK**.

- **For macOS:**

  See Changing the Connection Mode.

Connecting with Wireless Direct

You can connect devices (e.g. computer, smartphone, or tablet) to the printer by two methods below.

- Wireless connection (connecting devices via a wireless router)
- Direct wireless connection (connecting devices directly without a wireless router)

This section describes Wireless Direct, which allows you to print by connecting the devices to the printer directly.

Follow the procedure below to set up and use Wireless Direct.

1. Preparing the printer.

   ➡ Changing Printer Setting to Use Wireless Direct

2. Preparing a device to connect to the printer.

   ➡ Connecting a smartphone/tablet/computer to the printer

Important

- You can connect up to 5 devices to the printer at the same time with Wireless Direct.
- Check the usage restrictions and switch the printer to the Wireless Direct.

  ➡ Restrictions

Changing Printer Setting to Use Wireless Direct

1. Make sure the printer is turned on.

2. Select (Setup) on HOME screen and then select **Device settings**.

3. Select **LAN settings**.

4. Select **Wireless Direct**.

5. Select **Enable/disable Wireless Direct**.

6. Check displayed message and then select **ON**.

The Wireless Direct is enabled and a device can be connected to the printer wirelessly.

Note

- The password is required when connecting a device to the printer. Depending on the device you are using, no password is required.
- When you connect a Wi-Fi Direct compatible device to the printer, select the device name from your device.
- To change the identifier (SSID) and the password, see below.

➡ Changing Wireless Direct Setting

Connecting a smartphone/tablet/computer to the printer

1. Enable Wi-Fi function on smartphone/tablet/computer.

   Enable Wi-Fi in the Settings menu on your smartphone/tablet/computer.

   For instructions on enabling the Wi-Fi function, refer to the instruction manual for your smartphone/tablet/computer.

2. Select (Setup) on HOME screen.

3. Select **Device settings**.

4. Select **LAN settings**.

5. Select **Wireless Direct**.

6. Select **Connect to smartphone**.

7. To connect with an iPhone/iPad, select **iPhone/iPad**. To connect with a non-iPhone/iPad, select **Others**.

   - **iPhone/iPad**

     1. Select **QR Code**.
     2. Scan the displayed QR code with the iPhone/iPad standard camera app.

        The iPhone/iPad is connected to the printer.

        Note

        - If the iPhone/iPad and printer cannot be connected, Wireless Direct is not enabled.

          See Changing Printer Setting to Use Wireless Direct to enable Wireless Direct.

   - **Others**

     1. Select **Next**.

        Network name (SSID) and **Password** are displayed.

        Note

        - To show the password, select **Show password**. To hide the password, select **Hide password**.
        - The password is required when connecting smartphone/tablet/computer to the printer.

     2. Select "DIRECT-XXXX-TR7600series" ("X" represents alphanumeric characters) on your smartphone/tablet/computer.

Note

- If "DIRECT-XXXX-TR7600series" does not appear on the list, Wireless Direct is not enabled.

  See Changing Printer Setting to Use Wireless Direct to enable Wireless Direct.

3. Enter **Password** on smartphone/tablet/computer.

   The smartphone/tablet/computer is connected to the printer.

Note

- If the printer is set to display a confirmation screen in **Connection request confirmation** of Changing Wireless Direct Setting, when the wireless direct compatible device connects to the printer, a confirmation screen asking for permission to connect is displayed on the printer touch screen.

  Make sure the name on the touch screen is the same as that of your wireless communication device and select **Yes**.

You can print from your smartphone or tablet by installing Canon PRINT Inkjet/SELPHY. Download it from App Store and Google Play.

- For iOS
- For Android

Changing Wireless Direct Setting

Change the settings for the Wireless Direct following the procedure below.

1. Make sure the printer is turned on.

2. Select (Setup) on HOME screen and then select **Device settings**.

3. Select **LAN settings**.

4. Select **Wireless Direct**.

5. Select a setting item.

   Scroll down if necessary.

   - **See settings**

     The setting values for using the printer with Wireless Direct are displayed.

   - **Change network name (SSID)**

     Change the identifier (SSID) for Wireless Direct.

     The identifier (SSID) is the printer's name (device name) displayed on a Wi-Fi Direct compatible device.

     Follow the procedure below to change the identifier (SSID).

- To set manually
  1. Select the displayed identifier (SSID).
  2. Change using the keyboard that appears.
  3. When you have finished making changes, select **OK**.
- To set automatically
  1. Select **Auto update**.
  2. Select **Yes**.

     You can check the updated setting.

- **Change password**

  Change the password for Wireless Direct.

  - To set manually.
    1. Select **Change manually**.
    2. Select the displayed password.
    3. Enter the new password (10 characters).

       Change using the keyboard that appears.
    4. When you have finished making changes, select **OK**.
  - To set automatically
    1. Select **Auto update**.
    2. Select **Yes**.

       You can check the updated setting.

- **Connection request confirmation**

  Change the confirmation screen setting when a Wi-Fi Direct compatible device is connecting to the printer.

  If you want the printer to display the screen to inform you a Wi-Fi Direct compatible device is connecting to the printer, select **ON**.

  Important

  - To prevent an unauthorized access, we recommend you should select the setting to display the confirmation screen.

Note

- If you change the Wireless Direct setting of the printer, also change the wireless router setting of the device.

Wi-Fi Connection Assistant (Windows)

- Wi-Fi Connection Assistant
- Starting Up Wi-Fi Connection Assistant
- Diagnosing and Repairing Network Settings
- Performing/Changing Network Settings
- List of Models Which Does Not Support Diagnosis and Repair Function
- List of Models Which Does Not Support IPv6 Configuration via USB Connection

Important

- Some functions may not be available depending on your model and software version.

Wi-Fi Connection Assistant

Wi-Fi Connection Assistant allows you to diagnose or repair the network status, and to perform printer settings on network.

Use Wi-Fi Connection Assistant for:

- Searching printers on network and performing initial network setup for detected printers
- Performing initial network setup by connecting the printer and computer using a USB cable (Not available for some models)
- Changing printer network settings
- Diagnosing the settings of the printer and those of computer on which Wi-Fi Connection Assistant is installed if anything is wrong with connection. In addition, Wi-Fi Connection Assistant repairs the status of the printer and computer (Not available for some models).

Important

- Depending on the printer you are using, an administrator password is already specified for the printer at the time of purchase. When you change the network settings, authentication by the administrator password is required.

  For details:

  ➡ Administrator Password

  For improving security, we recommend to change the administrator password.

  ➡ Change Administrator Password

- To use the printer over LAN, make sure you have the equipment necessary for the connection type, such as a wireless router or a LAN cable.
- When you install Wi-Fi Connection Assistant, disable block function of firewall.
- Do not change network settings using Wi-Fi Connection Assistant while printing is in progress.

Starting Up Wi-Fi Connection Assistant

Start up Wi-Fi Connection Assistant as shown below.

- In Windows 10, select **Start** > (**All apps** >) > **Canon Utilities** > **Wi-Fi Connection Assistant**.
- In Windows 8.1 or Windows 8, select **Wi-Fi Connection Assistant** on the **Start** screen to start Wi-Fi Connection Assistant. If **Wi-Fi Connection Assistant** is not displayed on the **Start** screen, select the **Search** charm and search for "Wi-Fi Connection Assistant".
- In Windows 7 or Windows Vista, click **Start** and select **All Programs**, **Canon Utilities**, **Wi-Fi Connection Assistant**, and then **Wi-Fi Connection Assistant**.

When you start up Wi-Fi Connection Assistant, a message appears. Check the message and select **Yes**. The screen below appears.

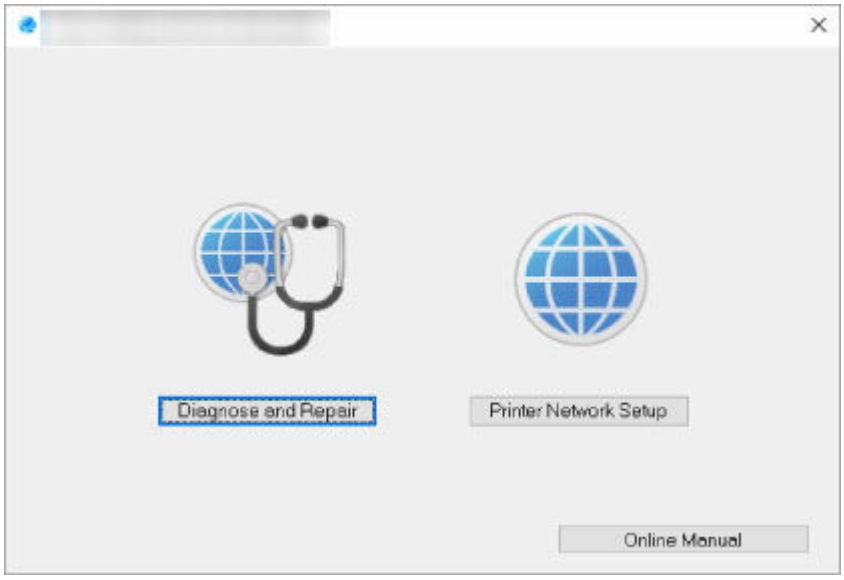

Select **Diagnose and Repair** or **Printer Network Setup** on the displayed screen.

- If you select **Diagnose and Repair**:

  ➡ Diagnosing and Repairing Network Settings

- If you select **Printer Network Setup**:

  ➡ Performing/Changing Network Settings

Diagnosing and Repairing Network Settings

Wi-Fi Connection Assistant diagnoses and repairs computer settings or connection between the computer and printer when a problem (e.g. cannot print from a printer on the network) occurs.

Important

- Some models do not support diagnosis and repair function.

  For details:

  ➡ List of Models Which Does Not Support Diagnosis and Repair Function

Follow the procedure below.

1. Start up Wi-Fi Connection Assistant.

2. Check the displayed message and select **Yes**.

3. Select **Diagnose and Repair** on the displayed screen.

   Perform operations following the instructions on the screen.

   Note

   - This function checks the following items:
     - whether the computer is connected to the router
     - whether a web page on the Internet can be viewed
     - whether the printer can be detected on the network
     - whether the signal strength or communication level is sufficient (when using Wi-Fi)
     - whether the printer port setting matches with the network setting

Performing/Changing Network Settings

- Canon Wi-Fi Connection Assistant Screen
- Performing Network Settings

Canon Wi-Fi Connection Assistant Screen

- Items on Canon Wi-Fi Connection Assistant Screen
- Menus on Canon Wi-Fi Connection Assistant Screen
- Items on Canon Wi-Fi Connection Assistant Screen Toolbar

Items on Canon Wi-Fi Connection Assistant Screen

The screen below appears when you start up Wi-Fi Connection Assistant and select **Printer Network Setup**. Detected printers are listed on the screen and the items below are shown.

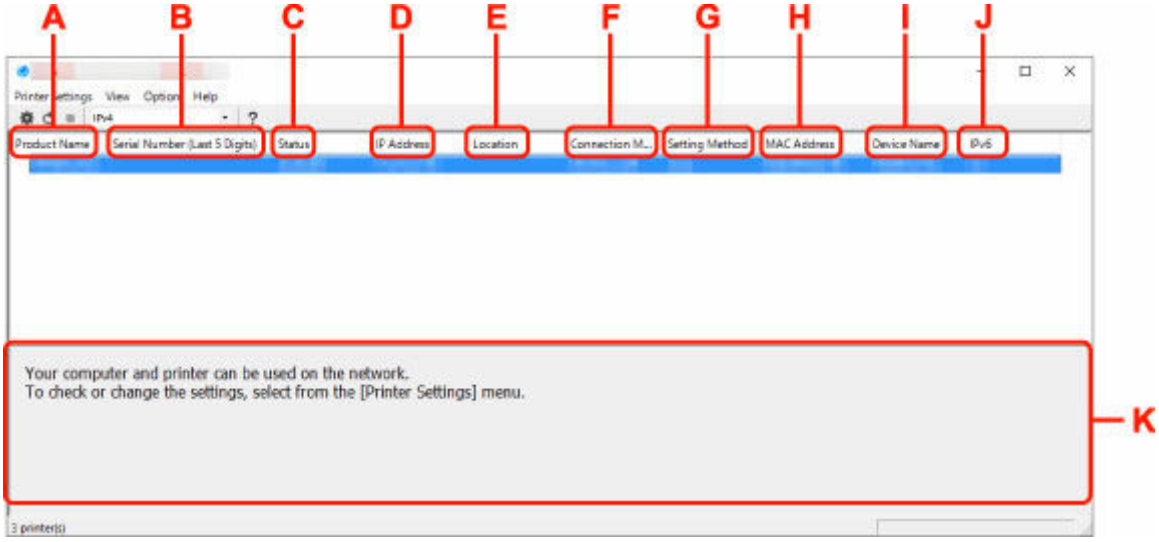

A: Product Name

Displays the product name of detected printer. The icon below appears on the left if the printer cannot be used.

: Appears when the printer requires setup or has not been configured.

: Appears when the IP address is duplicated to another printer.

: Appears when you cannot communicate with the printer.

Note

- If a printer you want to use is not detected, try to set the criteria for printer search.
  - Setting Criteria for Printer Search/Searching Specific Printer
- Right-clicking a printer displays setting items or items to confirm.

B: Serial Number (Last 5 Digits)

Displays the last five digits of printer's serial number.

C: Status

Displays the printer status as shown below.

- **Available**

  Indicates the printer is available.

- **Setup Completed**

Appears after performing network setup and clicking **Set** to close the window.

- **Requires Setup**

  Indicates the printer is required to perform Wi-Fi setup.

  ➡ Performing/Changing Wi-Fi Settings

- **Not Set**

  Indicates the printer cannot be used on network, or IPv6 is disabled. Specify an IP address or enable IPv6 on **Network Settings...**.

  ➡ Performing/Changing Wi-Fi Settings

- **IP Address Overlap**

  Indicates the IP address is duplicated to another printer.

- **Unknown**

  Indicates the printer recognized as **Available** in the past cannot be used currently.

  Note

  - If **USB** is selected from the pulldown menu on the toolbar, nothing is displayed.

D: IP Address

Displays the printer IP address. Nothing is displayed if the printer status is **Requires Setup**.

Note

- If **USB** is selected from the pulldown menu on the toolbar, "-" is displayed.

E: Location

Displays the printer location if it is registered. Nothing is displayed if the printer status is **Requires Setup**.

Note

- If **USB** is selected from the pulldown menu on the toolbar, nothing is displayed.

➡ Assigning Printer Information

F: Connection Method

Displays printer connection method (wired LAN, Wi-Fi, or USB).

Note

- If **USB** is selected from the pulldown menu on the toolbar, **USB** is displayed.
- If the printer supports both of the LAN connection methods, the printer is recognized as two printers and they are displayed separately. (The same numbers are displayed on **Serial Number (Last 5 Digits)**.)
- If the printer does not support wired LAN, wired LAN is not displayed.
- If you are using Wi-Fi Connection Assistant on the computer which does not support Wi-Fi, Wi-Fi is not displayed.

G: Setting Method

Displays printer setting method.

- **Auto**

Appears if the printer is used by IP address specified automatically.

- **Manual**

  Appears if the printer is used by IP address specified manually.

Note

- If **USB** is selected from the pulldown menu on the toolbar, "-" is displayed.

H: MAC Address

Displays the MAC address of the detected printer.

Note

- If **USB** is selected from the pulldown menu on the toolbar, "-" is displayed.

I: Device Name

Displays the printer device name if it is registered.

Note

- If **USB** is selected from the pulldown menu on the toolbar, nothing is displayed.
- The printer with **Requires Setup** displayed on **Status** is not displayed.

➡ Assigning Printer Information

J: IPv6

On appears when an IPv6 address is assigned for the printer.

Note

- If **USB** is selected from the pulldown menu on the toolbar, "-" is displayed.

K: Displays the printer status and operation guides.

Selecting a printer from the printer list displays its current status and what to do next.

Menus on Canon Wi-Fi Connection Assistant Screen

This section describes menus on **Canon Wi-Fi Connection Assistant** screen.

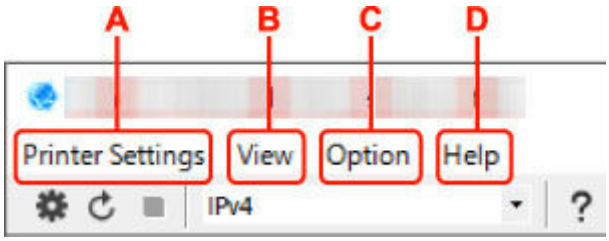

A: Printer Settings menu

➡ Printer Settings Menu

B: View menu

➡ View Menu

C: Option menu

➡ Option Menu

D: Help menu

➡ Help Menu

Items on Canon Wi-Fi Connection Assistant Screen Toolbar

This section describes items on **Canon Wi-Fi Connection Assistant** Screen toolbar.

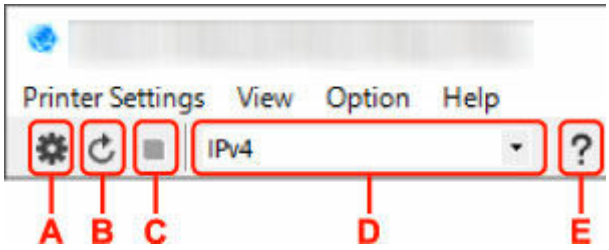

A: Perform wired or Wi-Fi setup.

Note

- This item has the same function as **Network Settings...** in the **Printer Settings** menu.

B: Redetects printers.

Note

- This item has the same function as **Update** in the **View** menu.

C: Stops detecting printers.

Note

- This item has the same function as **Cancel** in the **View** menu.

D: Switches the printer list. (IPv4, IPv6, or USB printers)

Note

- This item has the same function as **Switch View** in the **View** menu.
- You can also display the USB connected printer list. (Not available for some models.) In this case, select **USB**.

E: Displays this guide.

Note

- This item has the same function as **Online Manual** in the **Help** menu.

Performing Network Settings

- **Performing/Changing Wired LAN Connection (Ethernet Cable) Settings （Supported models only）**
- **Performing/Changing Wi-Fi Settings**
- **Assigning Printer Information**

Important

- Some functions may not be available depending on your model and software version.

Performing/Changing Wi-Fi Settings

Follow the procedure below to perform/change Wi-Fi settings.

Important

- Enable Easy wireless connect (Cableless setup) before performing printer setup. (Not required if you change the IP address.) For details, search for "NR049" on your printer's online manual and see the page shown.
- If you use a printer over the Wi-Fi, we highly recommend you perform security settings for Wi-Fi network using WPA/WPA2 from the viewpoint of security.

Note

- For some models, you can perform network setup for a USB connected printer using Wi-Fi Connection Assistant. Select **USB** on **Switch View** under the **View** menu to display printers.

1. Start up Wi-Fi Connection Assistant.

2. Check the displayed message and select **Yes**.

3. Select **Printer Network Setup** on the displayed screen.

   Detected printers are listed.

4. Select printer to perform/change settings from printer list.

   Select the printer with **Wi-Fi** displayed on **Connection Method** and **Available** or **Requires Setup** displayed on **Status** to perform settings.

   You can perform settings for a printer with **Available** or **Requires Setup** not displayed on **Status** via USB connection.

   To perform setup for a USB connected printer, select **USB** from the pulldown menu on the toolbar and select the printer to perform/change settings.

5. Select **Network Settings...** on **Printer Settings** menu.

   The **Confirm Printer Password** screen appears.

   For more on the password, refer to Administrator Password.

   #### Note

   - Clicking the ⚙ icon allows you to perform/change settings.
   - If you select a USB connected printer on step 4 and the selected printer is compatible with wired LAN, the screen below appears after the **Confirm Printer Password** screen appears

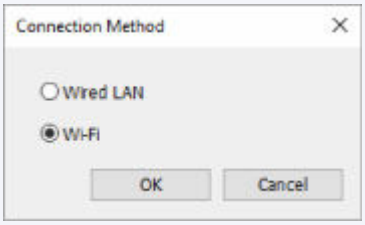

Select **Wi-Fi** and click **OK**.

6. Enter password and click **OK**.

The **Network Settings** screen appears.

7. Perform/change settings.

You can switch the screen between IPv4 and IPv6. Click the tab to switch the protocol.

- IPv4/IPv6 settings

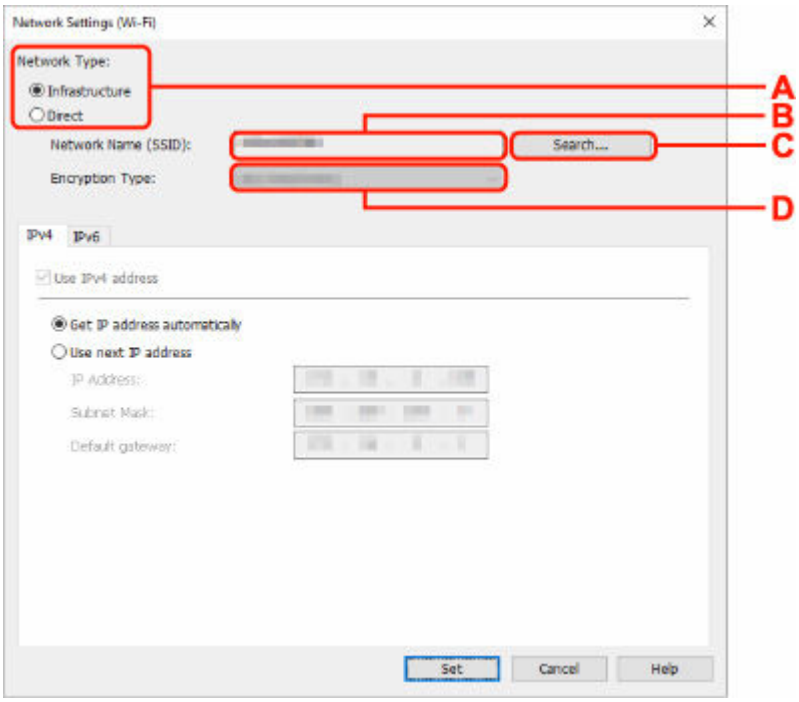

A: Network Type:

Select the Wi-Fi mode.

- **Infrastructure**

  Connects the printer to the Wi-Fi with a wireless router.

- **Direct**

  Connects the printer to wireless communication devices (smartphone or tablet) without a wireless router.

Note

- If Wi-Fi is enabled on the computer and if you select a USB connected printer on step 4, you can select **Direct** depending on the printer you are using.
- If **Direct** is selected, all items are displayed in a gray out status and you cannot perform any settings.

  In addition, you cannot connect to Internet from your computer depending on your operating environment.

B: Network Name (SSID):

The network name (SSID) of the Wi-Fi currently used is displayed.

The network name (SSID) for Wireless Direct appears while in Wireless Direct.

C: Search...

The **Detected Wireless Routers** screen is displayed to select a wireless router to connect to. For a wireless router already connected to the computer, **Available** is displayed on **Communication Status**.

If you select a wireless router with **Not Connected** on **Communication Status** from the list, clicking **Set** displays the WPA/WPA2 or WEP setting screen for a wireless router.

➡ If WEP Details Screen Appears
➡ If WPA/WPA2 Details Screen Appears

D: Encryption Type:

Displays the encryption method used over the Wi-Fi.

- IPv4 settings

Note

- The setting items below are available only when **Infrastructure** is selected for **Network Type:**.

  If **Direct** is selected, all items are displayed in a gray out status and you cannot perform any settings.

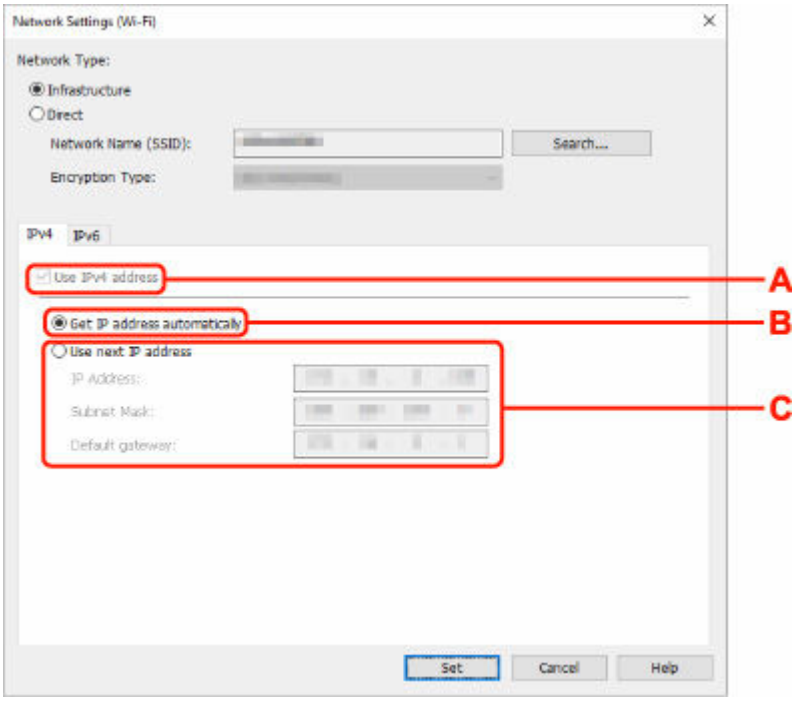

A: Use IPv4 address

Always selected. (displayed in a gray out state)

B: Get IP address automatically

Select this option to use an IP address automatically assigned by a DHCP server. DHCP server functionality must be enabled on your wireless router.

C: Use next IP address

Select this option if no DHCP server functionality is available in your setup where you use the printer, or you want to use a fixed IP address.

Enter the IP address, subnet mask, and default gateway.

- IPv6 settings

Note

- If you select a USB connected printer on step 4, you cannot perform IPv6 settings depending on the printer you are using.

  For details, see [List of Models Which Does Not Support IPv6 Configuration via USB Connection].

- The setting items below are available only when **Infrastructure** is selected for **Network Type:**.

  If **Direct** is selected, all items are displayed in a gray out status and you cannot perform any settings.

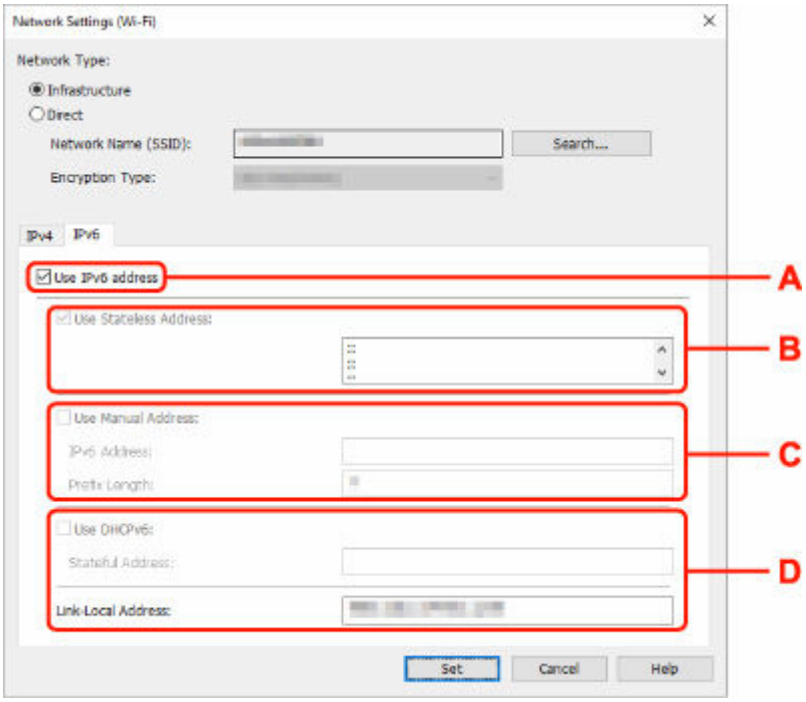

A: Use IPv6 address

Select when you use the printer with IPv6 environment.

B: Use Stateless Address:

Select when you use an IP address assigned automatically. Use a router compatible with IPv6.

Note

- This setting item is not available depending on the printer you are using.

C: Use Manual Address:

Select this option if no DHCP server functionality is available in your setup where you use the printer, or you want to use a fixed IP address.

Enter the IP address and IP address prefix length.

Note

- This setting item is not available depending on the printer you are using.

D: Use DHCPv6:

Select when you obtain an IP address using DHCPv6.

Note

- This setting item is not available depending on the printer you are using.

8. Click **Set**.

Assigning Printer Information

Follow the procedure below to assign/change printer location name or device name.

The names appear on **Device Name:** and **Location:** on the **Canon Wi-Fi Connection Assistant** screen.

Note

- If **USB** is selected from the pulldown menu on the toolbar, this setting item is not available.

1. Start up Wi-Fi Connection Assistant.

2. Check the displayed message and select **Yes**.

3. Select **Printer Network Setup** on the displayed screen.

   Detected printers are listed.

4. Select printer to assign location name and device name.

   Select the printer with **Available** displayed on **Status**.

5. Select **Detailed Printer Settings...** on **Printer Settings** menu.

   The **Confirm Printer Password** screen appears.

   For more on the password, refer to Administrator Password.

6. Enter password and click **OK**.

   The **Detailed Printer Settings** screen appears.

7. Perform/change settings.

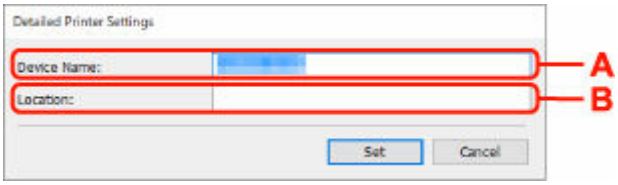

   The setting items below are available.

   A: Device Name:
   Assigns the device name.

   B: Location:
   Assigns the location name.

8. Click **Set**.

List of Models Which Does Not Support Diagnosis and Repair Function

The following models does not support "Diagnose and Repair" function of Wi-Fi Connection Assistant.

- G4000 series
- PRO-500 series
- PRO-1000 series
- MB2100 series
- MB2700 series
- MB5100 series
- MB5400 series
- iB4100 series
- PRO-520
- PRO-540
- PRO-540S
- PRO-560
- PRO-560S
- PRO-2000
- PRO-4000
- PRO-4000S
- PRO-6000
- PRO-6000S
- TS9000 series
- TS8000 series
- TS6000 series
- TS5000 series
- MG3000 series
- E470 series

List of Models Which Does Not Support IPv6 Configuration via USB Connection

For the following models, you can perform settings only for IPv4 using Wi-Fi Connection Assistant. (You cannot perform settings for IPv6.)

- iB4100 series
- MG3000 series
- E470 series
- G4000 series
- TS5000 series
- TS6000 series
- TS8000 series
- TS9000 series
- TR8500 series
- TR7500 series
- TS9100 series
- TS8100 series
- TS6100 series
- TS5100 series
- TS3100 series
- E3100 series
- TS300 series
- E300 series
- TR8580 series
- TS9180 series
- TS8180 series
- TS6180 series
- TR8530 series
- TR7530 series
- TS8130 series
- TS6130 series
- XK70 series
- XK50 series
- G4010 series
- G3010 series
- TR4500 series
- E4200 series
- TS6200 series
- TS6280 series
- TS6230 series
- TS8200 series
- XK80 series
- TS8280 series
- TS8230 series
- TS9500 series
- TS9580 series

- TR9530 series
- TS3300 series
- E3300 series

IJ Network Device Setup Utility (macOS)

- IJ Network Device Setup Utility
- Starting Up IJ Network Device Setup Utility
- Diagnosing and Repairing Network Settings
- List of Models Which Does Not Support Diagnosis and Repair Function

IJ Network Device Setup Utility

If anything is wrong with connection, IJ Network Device Setup Utility diagnoses the settings of the printer and those of computer on which it is installed. In addition, IJ Network Device Setup Utility restores the status of the printer and computer.

Important

- To use the printer over LAN, make sure you have the equipment necessary for the connection type, such as a wireless router or a LAN cable.
- When you install IJ Network Device Setup Utility, disable block function of firewall.

Starting Up IJ Network Device Setup Utility

Start up **Launchpad**, select **Canon Utilities**, and then select IJ Network Device Setup Utility.

When you start up IJ Network Device Setup Utility, the screen below appears.

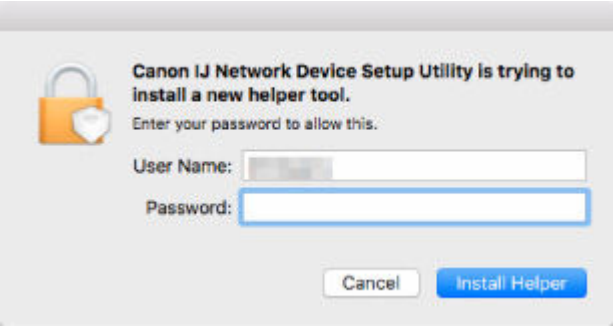

Enter the password specified for your computer and select **Install Helper**. IJ Network Device Setup Utility starts diagnosis and repair of network.

➡ Diagnosing and Repairing Network Settings

Diagnosing and Repairing Network Settings

IJ Network Device Setup Utility diagnoses and repairs computer settings or connection between the computer and printer when a problem (e.g. cannot print from a printer on the network) occurs.

Important

- Some models do not support diagnosis and repair function.

  For details:

  ➡ List of Models Which Does Not Support Diagnosis and Repair Function

IJ Network Device Setup Utility starts checking the computer settings when it starts up. Perform operations following the instructions on the screen.

Note

- This function checks the following items:
  - whether the computer is connected to the router
  - whether the printer can be detected on the network
  - whether the signal strength or communication level is sufficient (when using Wi-Fi)
  - whether the printer port setting matches with the network setting

List of Models Which Does Not Support Diagnosis and Repair Function

The following models does not support "Diagnose and Repair" function of IJ Network Device Setup Utility.

- G4000 series
- PRO-500 series
- PRO-1000 series
- MB2100 series
- MB2700 series
- MB5100 series
- MB5400 series
- iB4000 series
- PRO-520
- PRO-540
- PRO-560
- PRO-540S
- PRO-560S
- PRO-2000
- PRO-4000
- PRO-6000
- PRO-4000S
- PRO-6000S
- TS9000 series
- TS8000 series
- TS6000 series
- TS5000 series
- MG3000 series
- E470 series

Handling Paper, Originals, Ink Tanks, etc.

- Loading Paper
- Loading Originals
- Replacing Ink Tanks

Loading Paper

- Paper Sources
- Loading Plain Paper / Photo Paper in Rear Tray
- Loading Plain Paper in Cassette
- Loading Envelopes in Rear Tray

Paper Sources

The printer has two paper sources for feeding paper, the rear tray (A) and cassette (B).

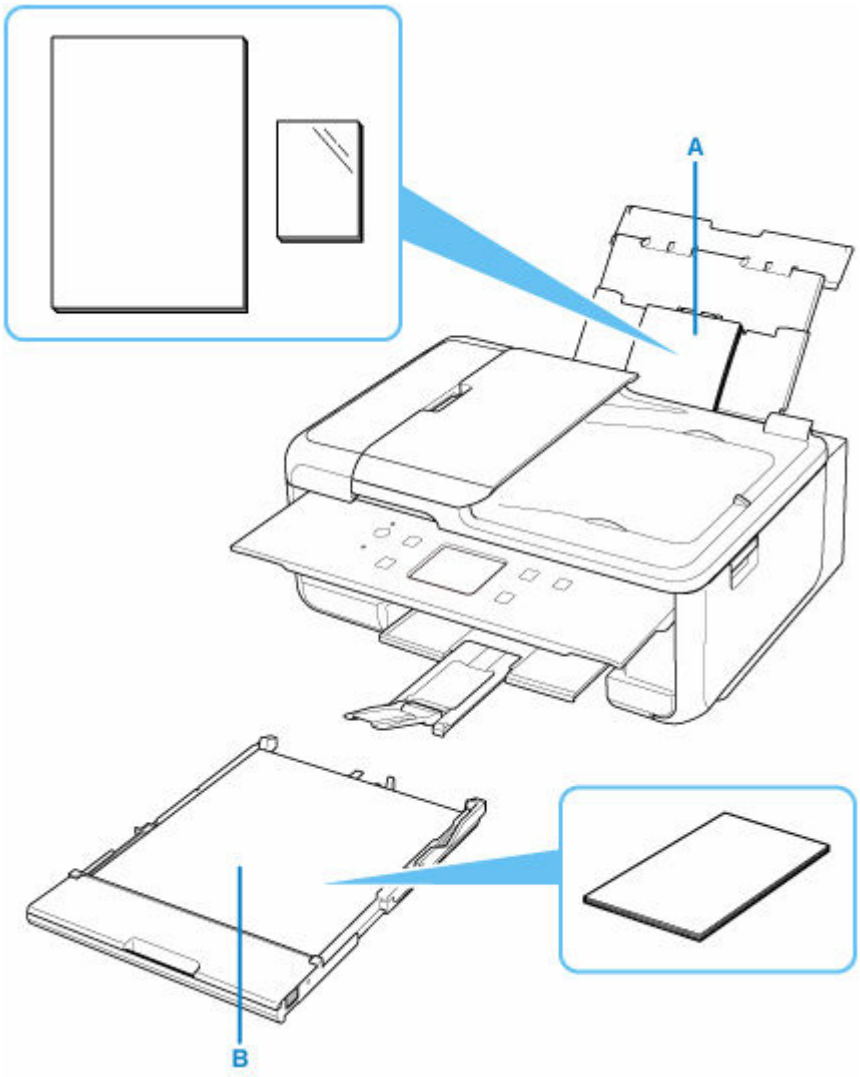

Rear tray

You can load all supported paper such as plain paper and photo paper on the rear tray.

➡ Supported Media Types

Cassette

You can load A4, B5, A5, or Letter-sized plain paper in the cassette.

Note

- When printing, select the correct page size and media type. If you select the wrong page size or media type, the printer may feed paper from the wrong paper source or may not print with the proper print quality.

  For details on how to load paper in each paper source, see below.

  ➡ Loading Plain Paper / Photo Paper in Rear Tray
  ➡ Loading Plain Paper in Cassette

➡ Loading Envelopes in Rear Tray

Loading Plain Paper / Photo Paper in Rear Tray

You can load plain paper or photo paper.

You can also load envelopes on the rear tray.

➡ Loading Envelopes in Rear Tray

Important

- If you cut plain paper to a size of 5" x 7" (13 x 18 cm) or smaller to perform a trial print, it may cause a paper jam.

Note

- We recommend Canon genuine photo paper for printing photos.

  For details on the Canon genuine paper, see Supported Media Types.
- You can use general copy paper or Canon Red Label Superior WOP111/Canon Océ Office Colour Paper SAT213.

  For the page size and paper weight you can use for this printer, see Supported Media Types.

1. Prepare paper.

Align the edges of paper. If paper is curled, flatten it.

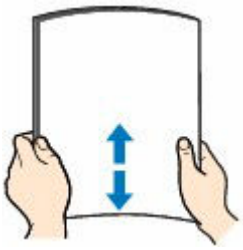

Note

- Align the edges of paper neatly before loading. Loading paper without aligning the edges may cause paper jams.
- If paper is curled, hold the curled corners and gently bend them in the opposite direction until the paper becomes completely flat.

  For details on how to flatten curled paper, see Check3 in Paper Is Smudged / Printed Surface Is Scratched.
- When using Photo Paper Plus Semi-gloss SG-201, even if the sheet is curled, load one sheet at a time as it is. If you roll up this paper to flatten, this may cause cracks on the surface of the paper and reduce the print quality.

2. Open rear tray cover (A). Pull straight up and fold back paper support (B).

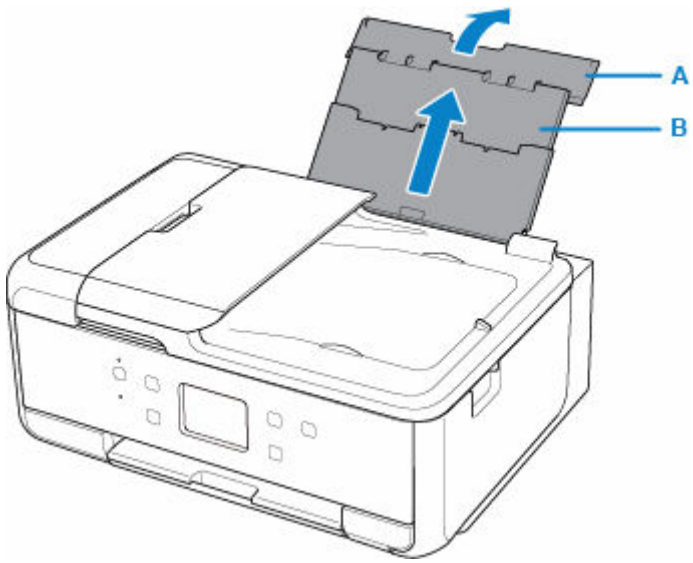

3. Open the feed slot cover (C).

4. Slide right paper guide (D) to open both paper guides.

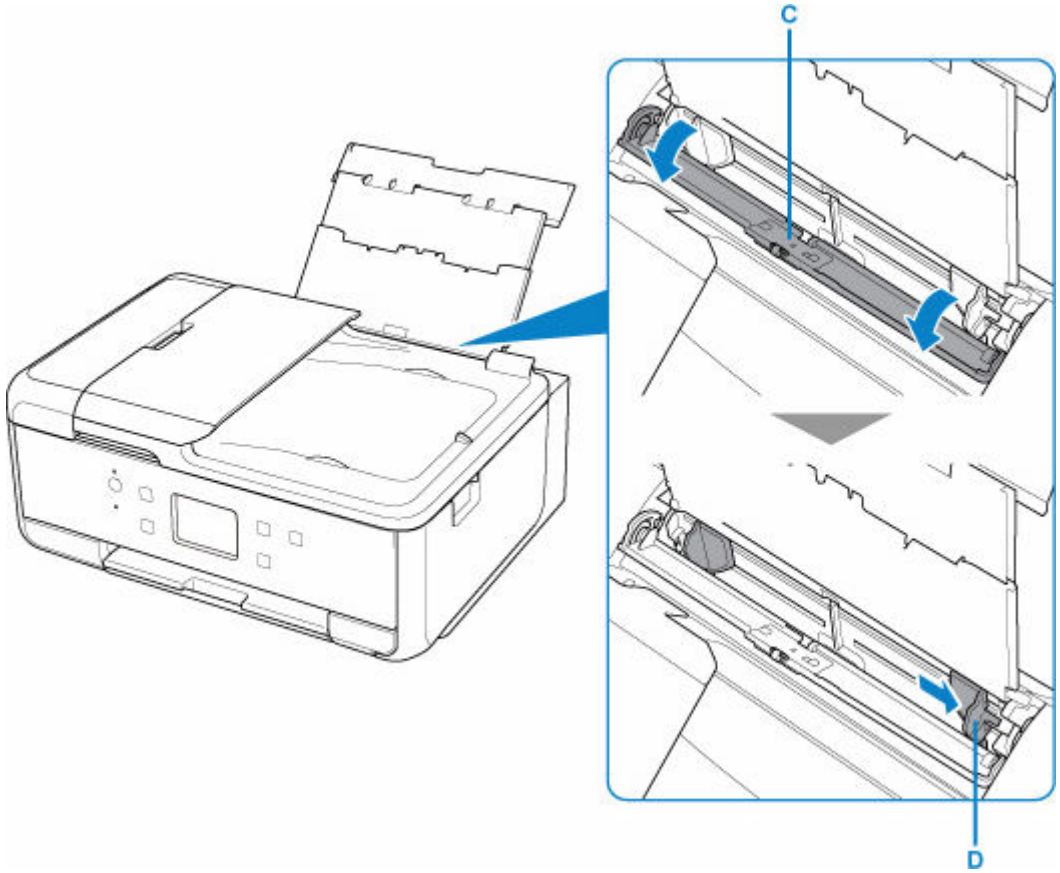

5. Load paper stack in portrait orientation WITH PRINT SIDE FACING UP.

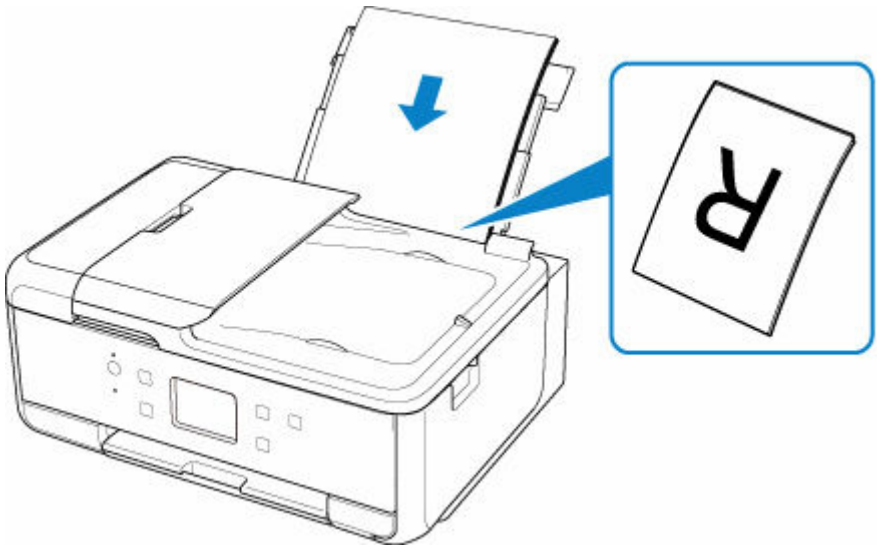

6. Slide right paper guide to align with both sides of paper stack.

Do not slide the paper guides too hard against the paper. The paper may not be fed properly.

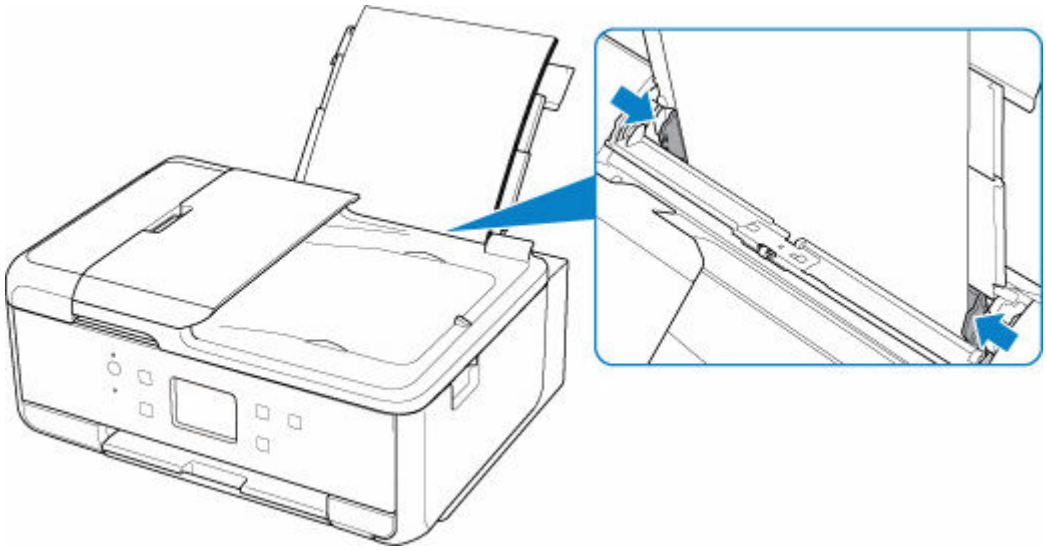

Important

- Always load paper in portrait orientation (E). Loading paper in landscape orientation (F) can cause paper jams.

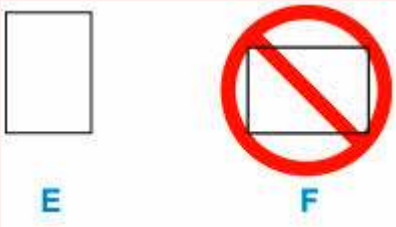

Note

- Do not load sheets of paper higher than the load limit mark (G).

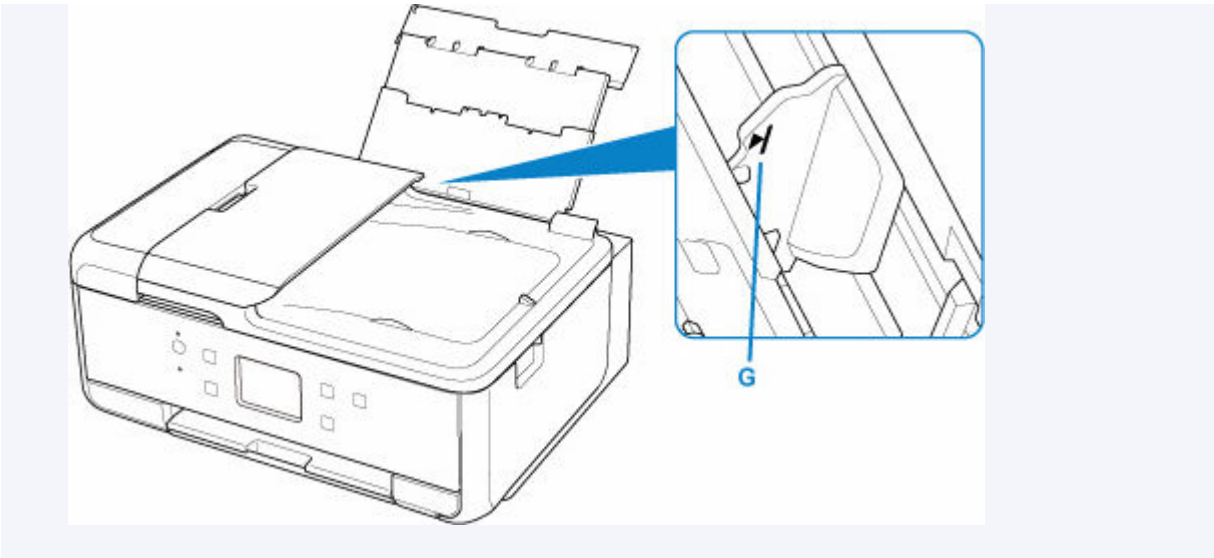

7. Close feed slot cover gently.

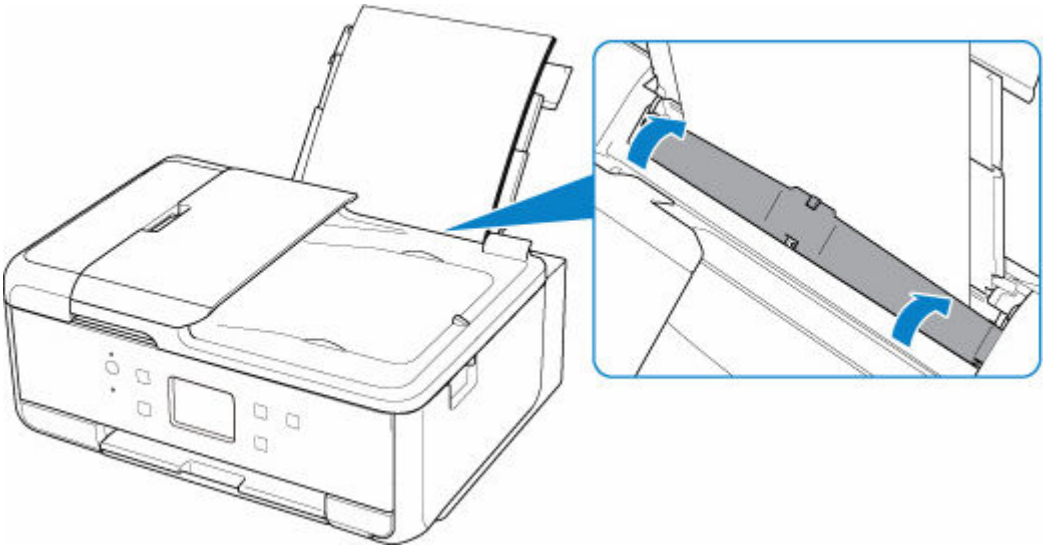

After closing the feed slot cover, the paper setting confirmation screen for the rear tray appears on the touch screen.

8. If page size and media type on touch screen match size and type of paper loaded in rear tray, select **Yes**.

If not, select **Change** to change the settings in accordance with the size and type of the loaded paper.

9. Open the operation panel (H), pull out the paper output tray (I) and paper output support (J), and open the output tray extension (K).

Be sure to open the operation panel before printing. If the operation panel is close, the printer does not start printing.

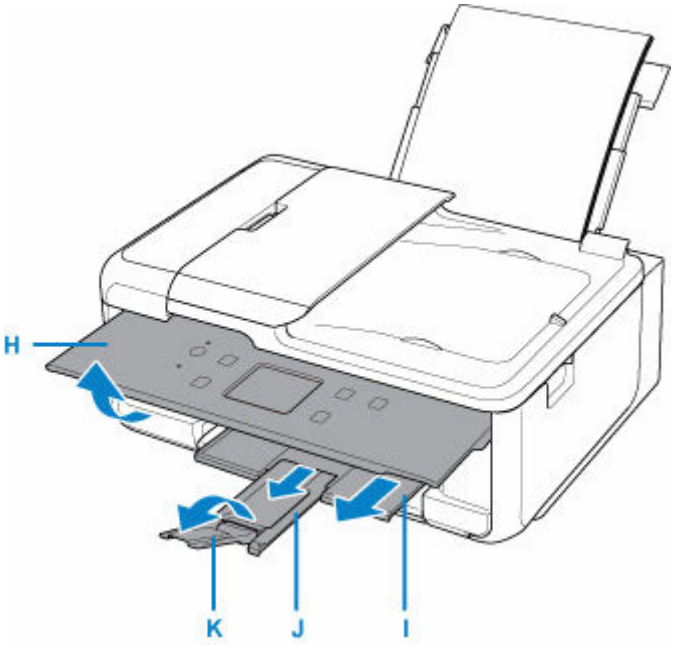

Note

- There are various types of paper, such as paper with a special surface coating for printing photos at optimal quality and paper suitable for documents. Each media type has specific preset settings (how ink is used and sprayed, distance from nozzles, etc.), that allow you to print to that type with optimal image quality. The wrong paper settings may cause poor printout color quality or scratches on the printed surface. If you notice blurring or uneven colors, increase the print quality setting and try printing again.
- To prevent incorrect printing, this printer has a function that detects whether the settings for the paper loaded on the rear tray matches the paper settings. Before printing, make print settings in accordance with the paper settings. When this function is enabled, an error message is displayed if these settings do not match to prevent incorrect printing. When this error message is displayed, check and correct the paper settings.

Loading Plain Paper in Cassette

You can load A4, B5, A5, or Letter-sized plain paper in the cassette.

Note

- In the cassette, be sure to load only plain paper.
- You can use general copy paper or Canon Red Label Superior WOP111/Canon Océ Office Colour Paper SAT213.

  For the page size and paper weight you can use for this printer, see Supported Media Types.

1. Prepare paper.

   Align the edges of paper. If paper is curled, flatten it.

   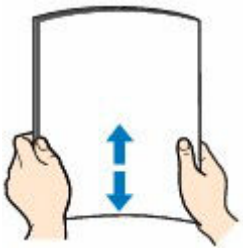

   Note

   - Align the edges of paper neatly before loading. Loading paper without aligning the edges may cause paper jams.
   - If paper is curled, hold the curled corners and gently bend them in the opposite direction until the paper becomes completely flat.

     For details on how to flatten curled paper, see Check3 in Paper Is Smudged / Printed Surface Is Scratched.

2. Pull out the cassette (A) from the printer.

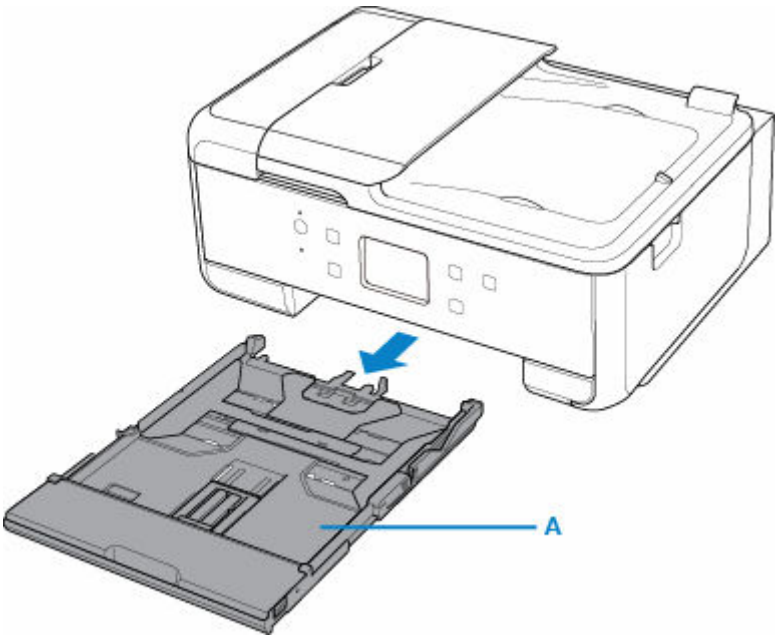

3. Remove the cassette cover (B).

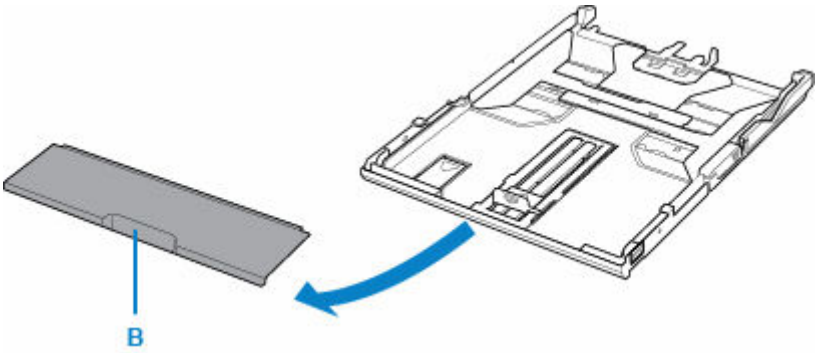

4. To load A4 sized paper in the cassette, press down the lock (C) on the cassette, then extend the cassette.

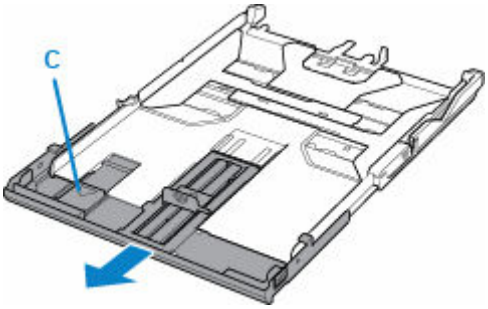

Important

- Do not extend the cassette when loading other than A4 sized paper in the cassette.

5. Slide paper guides (D) in front and (E) on right to open guides.

6. Load paper stack in portrait orientation WITH PRINT SIDE FACING DOWN, and place it in center of cassette.

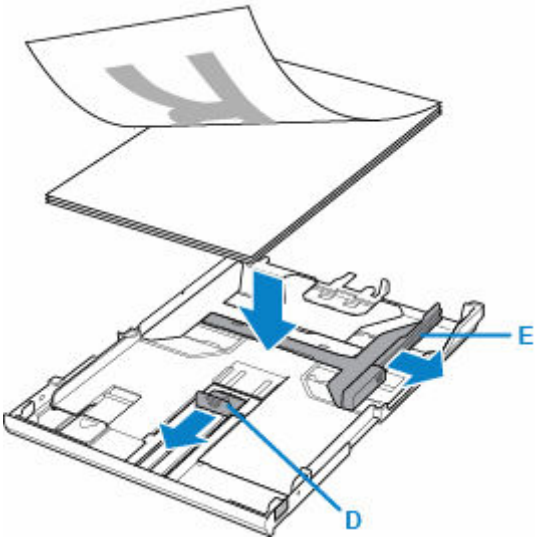

Important

- Always load paper in portrait orientation (F). Loading paper in landscape orientation (G) can cause paper jams.

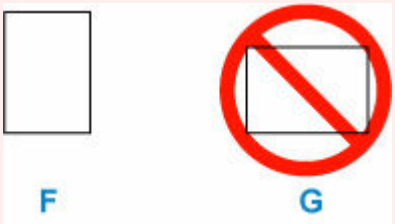

Note

- Align the paper stack with the edge of the cassette as shown in the figure below.

  If the paper stack is in contact with the protrusion (H), the paper may not be fed properly.

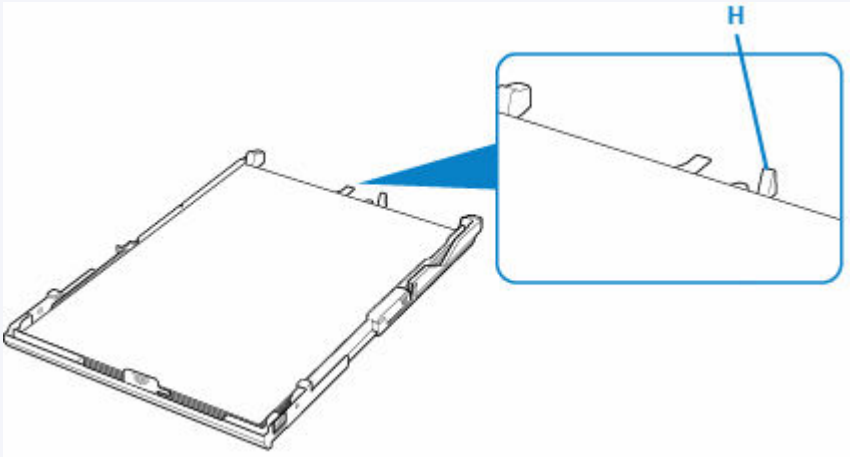

7. Slide front paper guide to align it with paper stack.

Align paper guide with where it clicks into place.

8. Slide right paper guide to align it with paper stack.

Do not slide the paper guide too hard against the paper. The paper may not be fed properly.

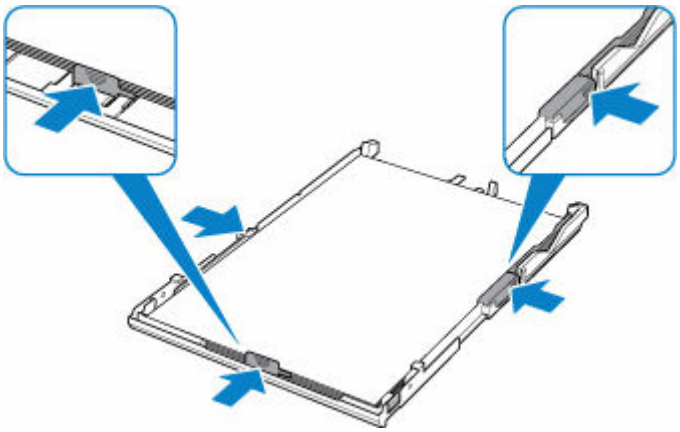

Note

- Do not load sheets of paper higher than the load limit mark (I).
- Keep the paper stack height below the tabs (J) of the paper guides.

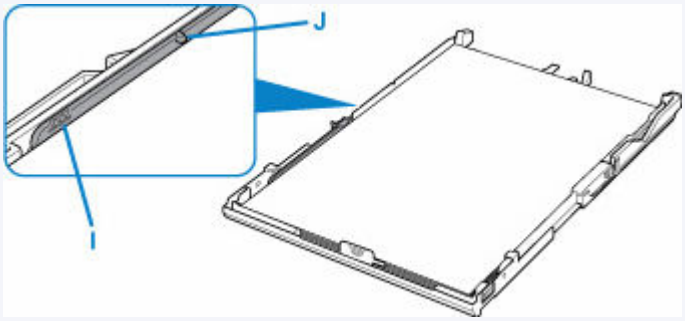

9. Mount cassette cover and insert cassette into printer.

Push the cassette into the printer until it stops.

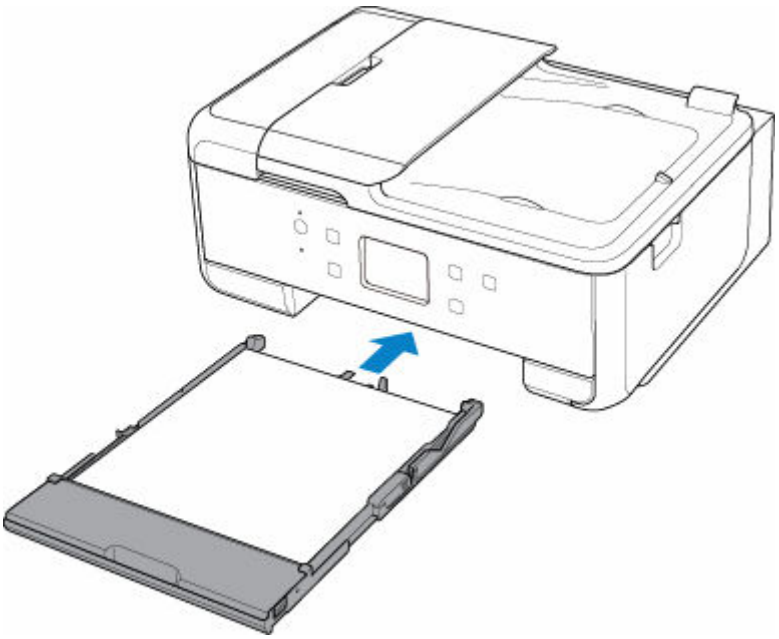

After inserting the cassette into the printer, the paper setting confirmation screen for the cassette appears on the touch screen.

10. If page size on touch screen matches size of paper loaded in cassette, select **Yes**.

If not, select **Change** to change the setting in accordance with the size of the loaded paper.

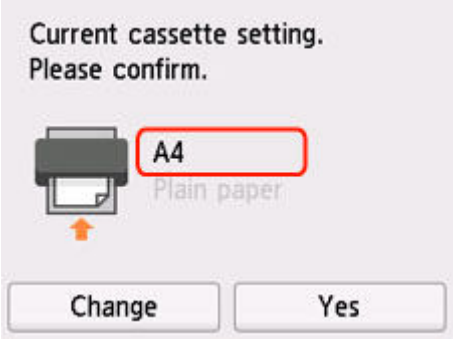

11. Open the operation panel (K), pull out the paper output tray (L) and paper output support (M), and open the output tray extension (N).

Be sure to open the operation panel before printing. If the operation panel is close, the printer does not start printing.

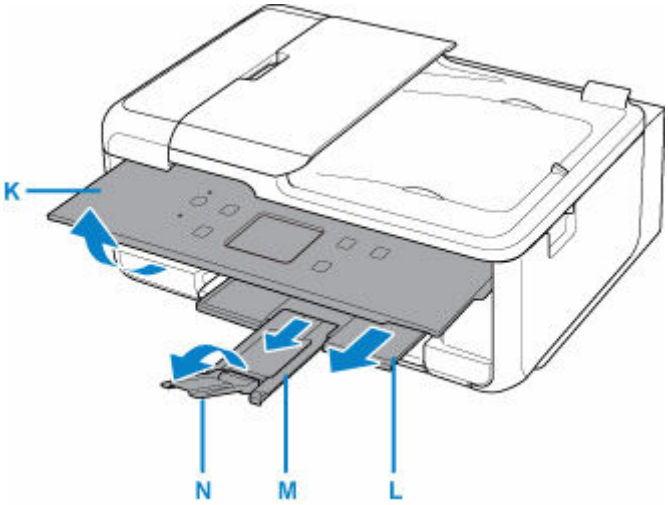

Note

- To prevent incorrect printing, this printer has a function that detects whether the settings for the paper loaded in the cassette matches the paper settings. Before printing, make print settings in accordance with the paper settings. When this function is enabled, an error message is displayed if these settings do not match to prevent incorrect printing. When this error message is displayed, check and correct the paper settings.

Loading Envelopes in Rear Tray

You can load Envelope DL and Envelope Com 10 on the rear tray.

The address is automatically rotated and printed according to the envelope's direction by specifying with the printer driver properly.

Important

- Do not use the following envelopes. They could jam in the printer or cause the printer to malfunction.
  - Envelopes with an embossed or treated surface
  - Envelopes with a double flap
  - Envelopes whose gummed flaps are already moistened and adhesive

1. Prepare envelopes.

- Press down on all four corners and edges of the envelopes to flatten them.

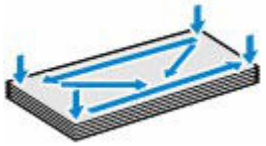

- If the envelopes are curled, hold the opposite corners and gently twist them in the opposite direction.

- If the corner of the envelope flap is folded, flatten it.
- Use a pen to press the leading edge in the inserting direction flat and sharpen the crease.

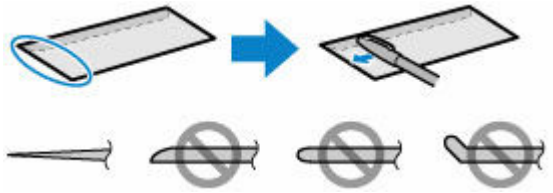

The figures above show a side view of the leading edge of the envelope.

Important

- The envelopes may jam in the printer if they are not flat or the edges are not aligned. Make sure that no curl or puff exceeds 0.12 in. (3 mm).

2. Open rear tray cover (A). Pull straight up and fold back paper support (B).

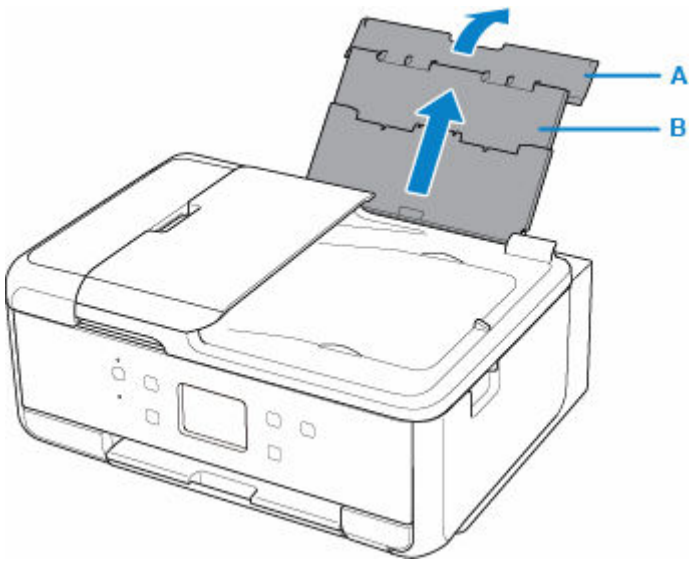

3. Open the feed slot cover (C).

4. Slide right paper guide (D) to open both paper guides.

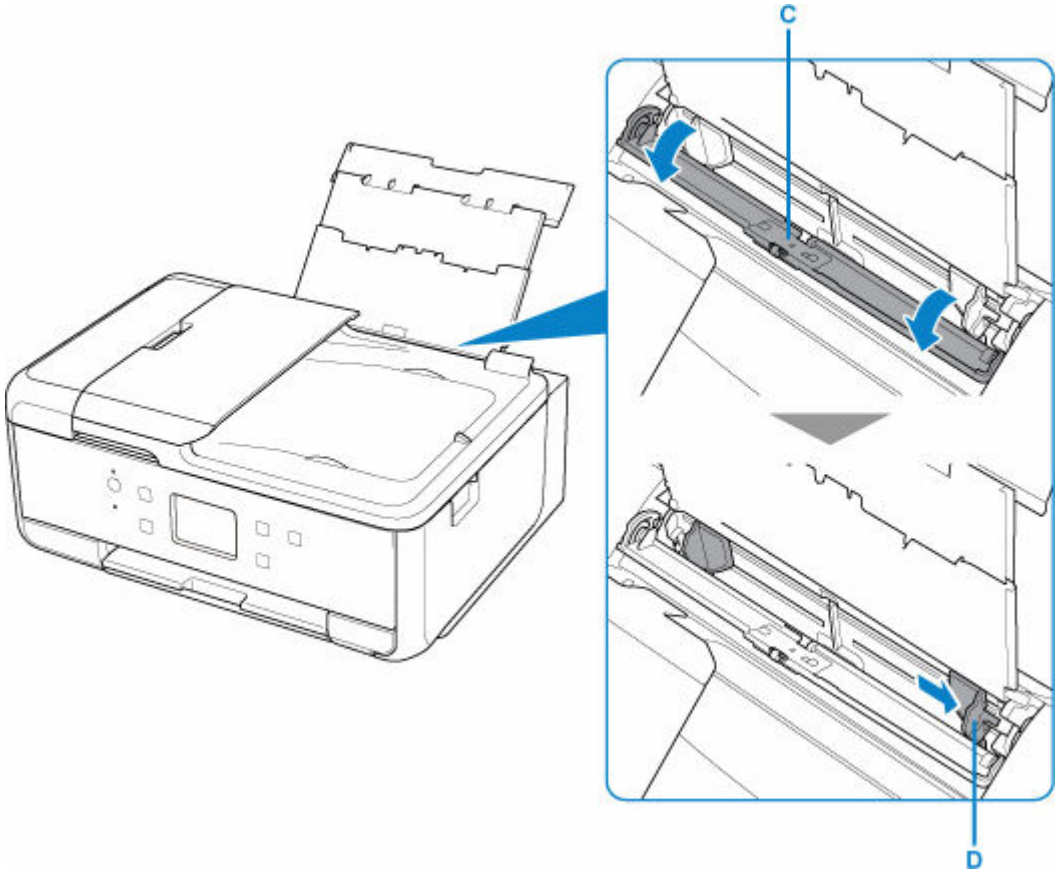

5. Load envelopes in portrait orientation WITH PRINT SIDE FACING UP.

   Up to 10 envelopes can be loaded at once.

   Fold flap of the envelope and load the envelope in portrait orientation with the address side facing up.

6. Slide right paper guide to align with both sides of envelopes.

Do not slide the paper guides too hard against the envelopes. The envelopes may not be fed properly.

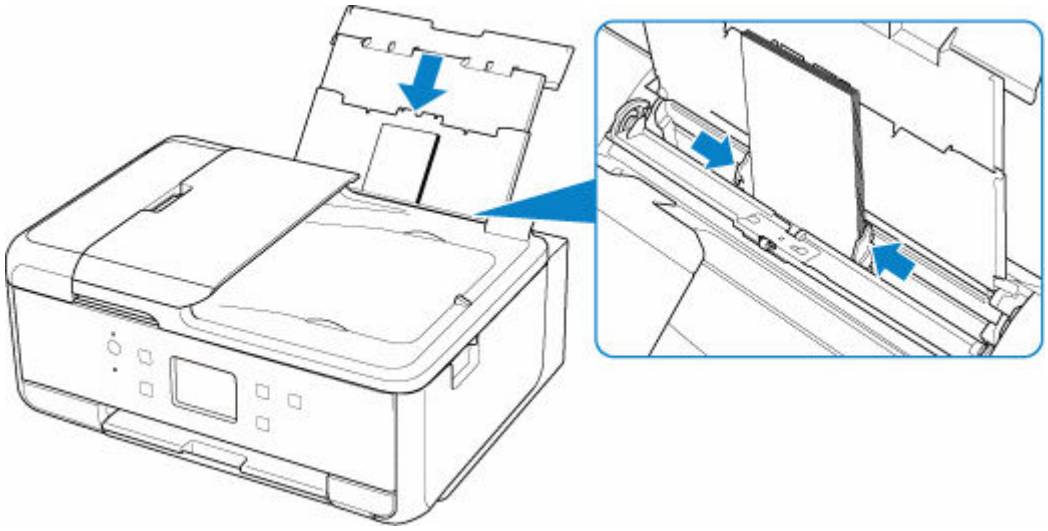

Note

- Do not load envelopes higher than the load limit mark (E).

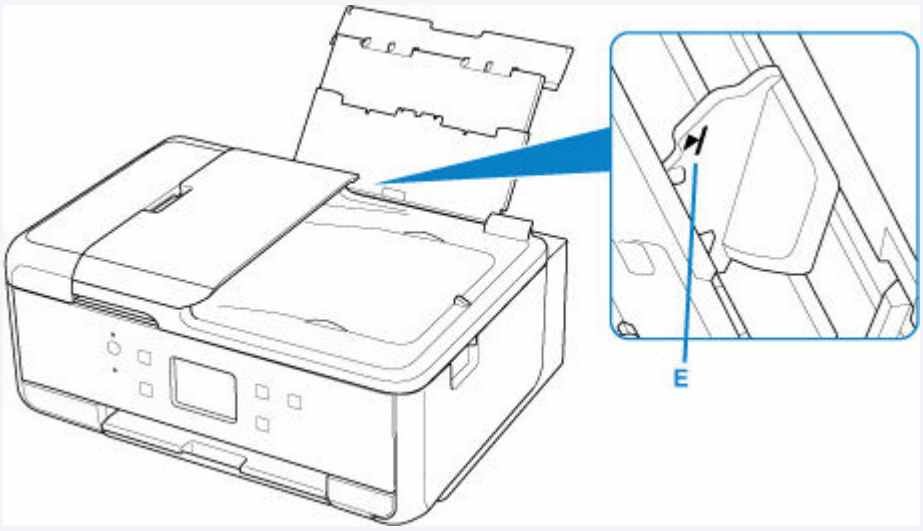

7. Close feed slot cover gently.

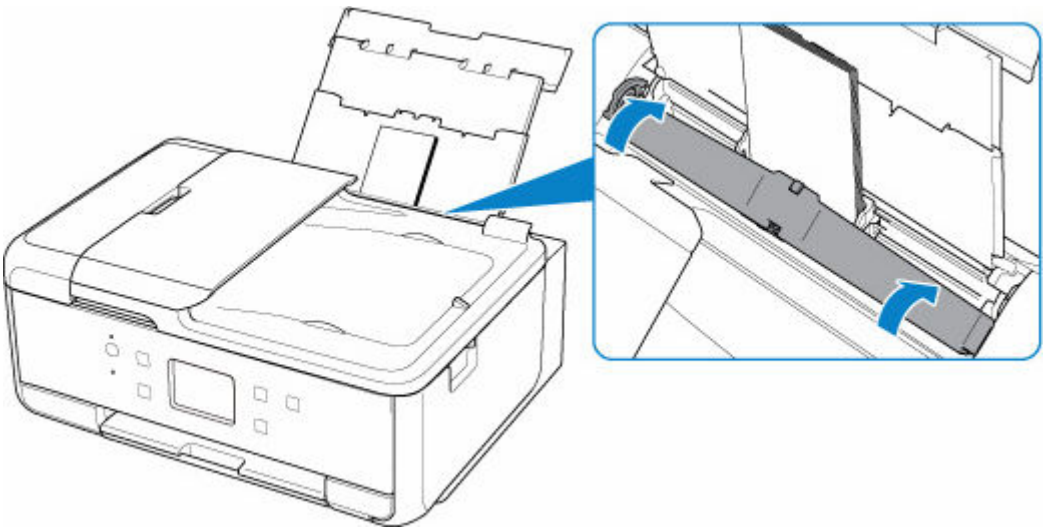

After closing the feed slot cover, the paper setting confirmation screen for the rear tray appears on the touch screen.

8. If page size and media type shown on touch screen match size and type of envelopes loaded in rear tray, select **Yes**.

If not, select **Change** to change the settings in accordance with the size and type of the loaded envelopes.

9. Open the operation panel (F), pull out the paper output tray (G) and paper output support (H), and open the output tray extension (I).

Be sure to open the operation panel before printing. If the operation panel is close, the printer does not start printing.

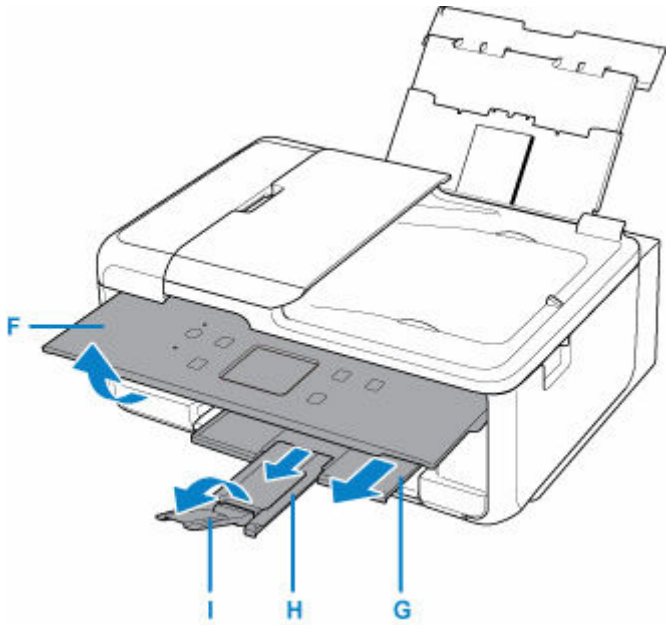

Note

- To prevent incorrect printing, this printer has a function that detects whether the settings for the paper loaded on the rear tray matches the paper settings. Before printing, make print settings in accordance with the paper settings. When this function is enabled, an error message is displayed if these settings do not match to prevent incorrect printing. When this error message is displayed, check and correct the paper settings.

Loading Originals

- Where to Load Originals
- Loading Originals on Platen
- Loading Documents in the ADF (Auto Document Feeder)
- Loading Based on Use
- Supported Originals

Where to Load Originals

The printer has two positions to load originals: platen and ADF (Auto Document Feeder).

Select the position to load the original according to the size, type, or usage.

Note

- For details on the supported originals, see below.

  ➡ Supported Originals

Loading Documents, Photos, or Book on Platen

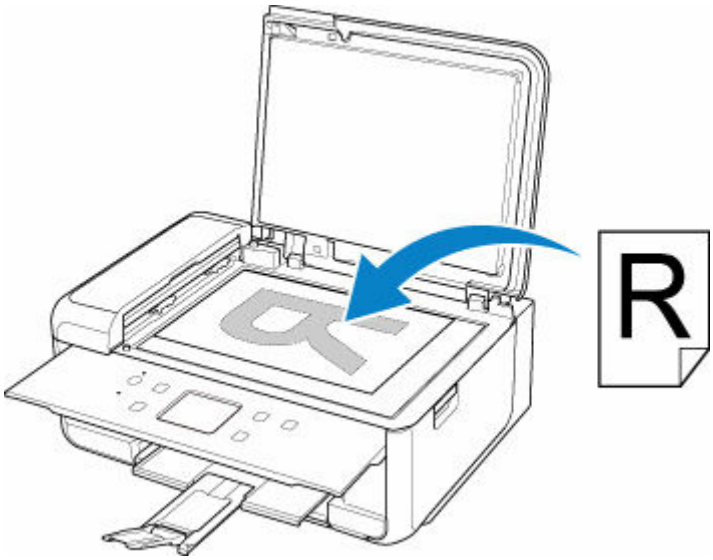

Loading Two or More Sheets of Document of the Same Size and Thickness in the ADF

You can also load a sheet of document in the ADF.

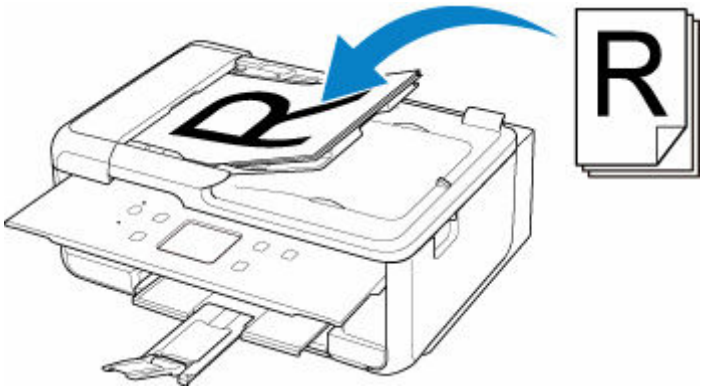

Note

- To scan the original at optimum quality, load it on the platen.

Loading Originals on Platen

1. Open the document cover.

2. Load original WITH SIDE TO SCAN FACING DOWN on platen.

   - Loading Based on Use
   - Supported Originals

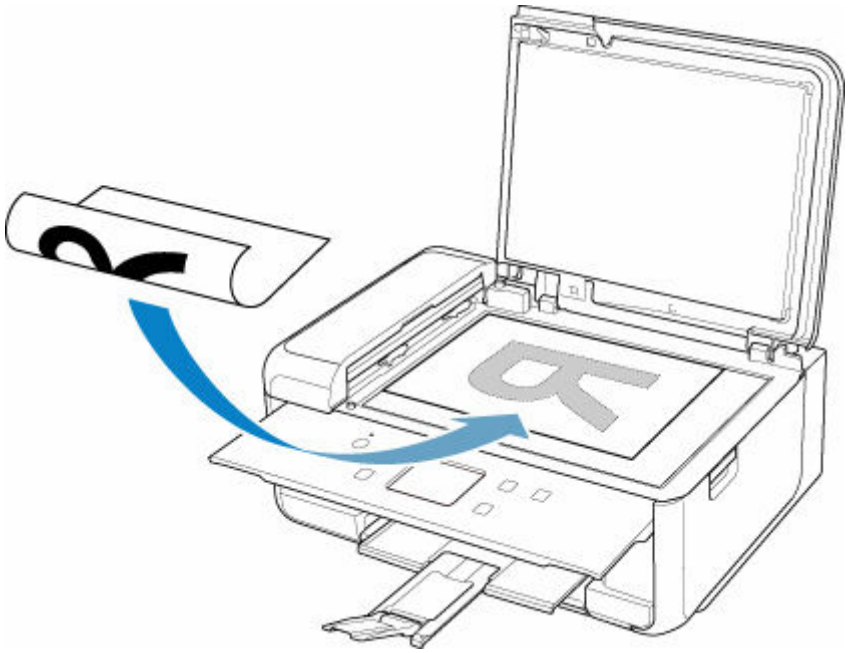

Important

- Be sure to observe the following when loading the original on the platen.

  Failure to observe the following may cause the scanner to malfunction or the platen glass to break.

  - Do not place any objects weighing 4.4 lb (2.0 kg) or more on the platen glass.
  - Do not put any pressure of 4.4 lb (2.0 kg) or more on the platen glass, such as pressing down the original.

3. Close the document cover gently.

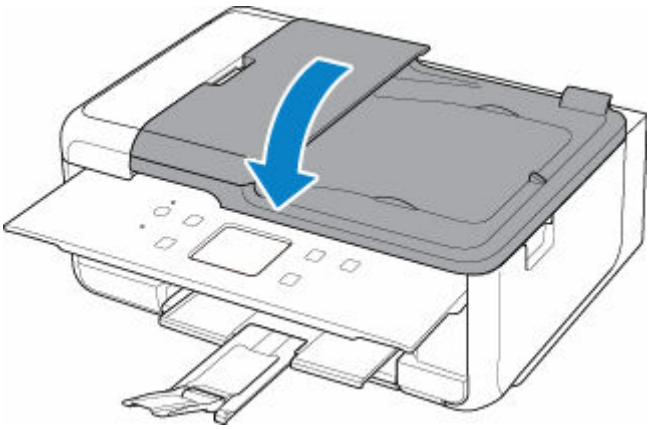

Important

- After loading the original on the platen, be sure to close the document cover before starting to copy or scan.

Loading Documents in the ADF (Auto Document Feeder)

Important

- Be careful not to let anything get inside the document output slot. It may cause damage.

Note

- To scan a document at optimum quality, load it on the platen.
- The duplex original cannot be scanned automatically by ADF.

1. Make sure any original has been removed from platen.

2. Open document tray (A).

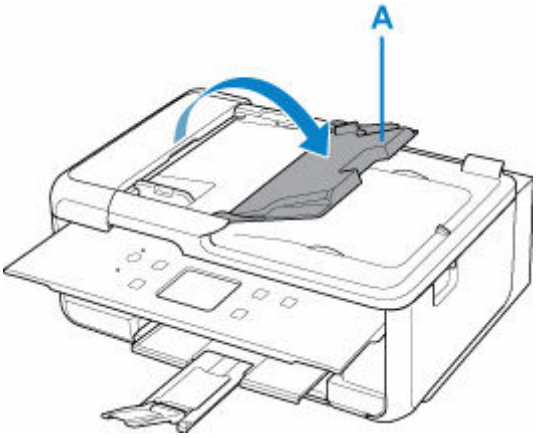

3. Slide the document guide (B) all the way out.

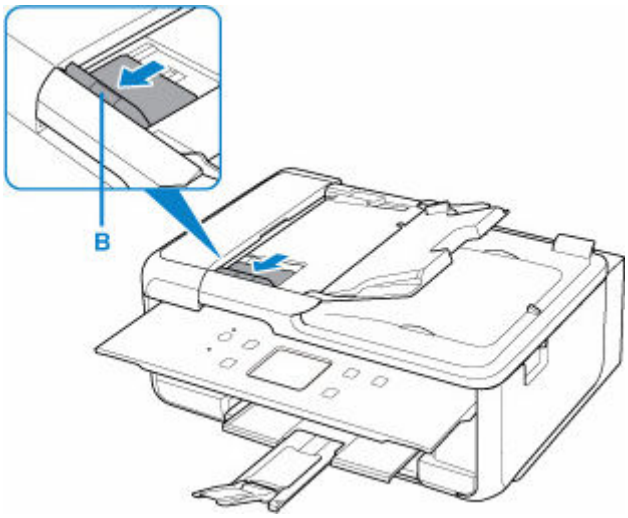

4. Insert document WITH SIDE TO SCAN FACING UP in document tray, until you hear a beep sound.

   Insert the document until it stops.

Note

- For details on the supported originals, see below.

  ➡ Supported Originals

5. Adjust document guide to match width of document.

Do not slide the document guide too hard against the document. The document may not be fed properly.

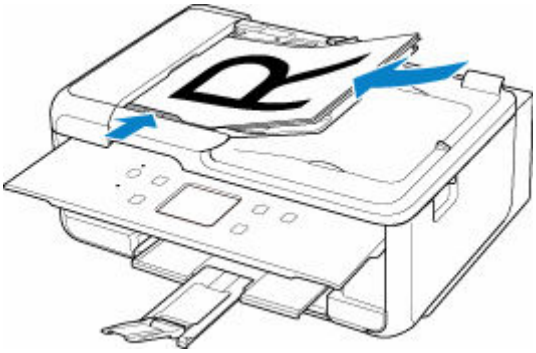

Loading Based on Use

Load the original in the correct position according to the function to use. If you do not load the original correctly, it may not be scanned properly.

Originals	Function	How to Load
Magazines, Newspapers, and Documents	**Copying or Faxing**	➡ Loading the Original to Be Aligned with the alignment mark
	Scanning by detecting the type and size of the original automatically If you scan using the operation panel, select **Auto scan** for **Doc.type** in **Scan**.	
	Scanning by specifying a standard size (A4, Letter, etc.) If you scan using the operation panel, select **Document** or **Photo** for **Doc.type** in **Scan** and specify a standard size (A4, Letter, etc.) for **Scan size** to scan originals.	
Photos, Postcards, Business Cards, and Disc (BD/DVD/CD)	**Scanning only one original** If you scan using the operation panel, follow the operation below. • Select **Auto scan** for **Doc.type** in **Scan**. • Select **Photo** for **Doc.type** in **Scan** and specify **Auto scan** for **Scan size** to scan originals.	➡ Loading Only One Original in Center of Platen
	Scanning two or more originals If you scan using the operation panel, follow the operation below. • Select **Auto scan** for **Doc.type** in **Scan**. • Select **Photo** for **Doc.type** in **Scan** and specify **Auto multi scan** for **Scan size** to scan two or more originals.	➡ Loading Two or More Originals on Platen

Note

- For details on how to scan from the computer and how to load originals, see below.
  - For Windows:
    - ➡ Scanning from Computer (Windows)
  - For macOS:
    - ➡ Scanning from Computer (macOS)

Loading the Original to Be Aligned with the alignment mark

Place the original WITH THE SIDE TO SCAN FACING DOWN on the platen and align it with the alignment mark . Portions placed on the diagonally striped area cannot be scanned.

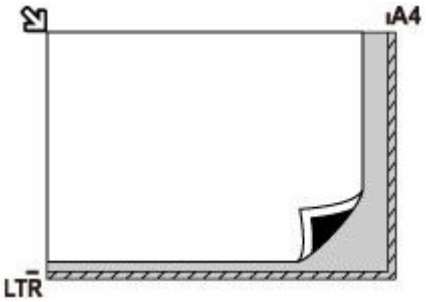

Important

- The printer cannot scan the striped area (A) (0.04 in. (1 mm) from the edges of the platen glass).

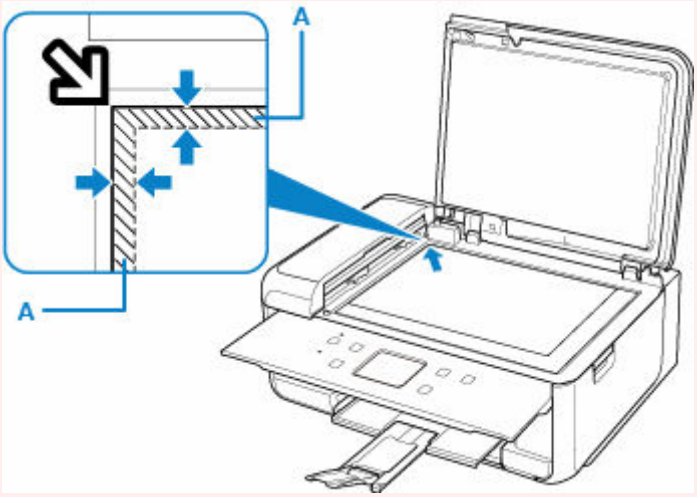

Loading Only One Original in Center of Platen

Place the original WITH THE SIDE TO SCAN FACING DOWN, with 0.40 in. (1 cm) or more space between the edges (diagonally striped area) of the platen. Portions placed on the diagonally striped area cannot be scanned.

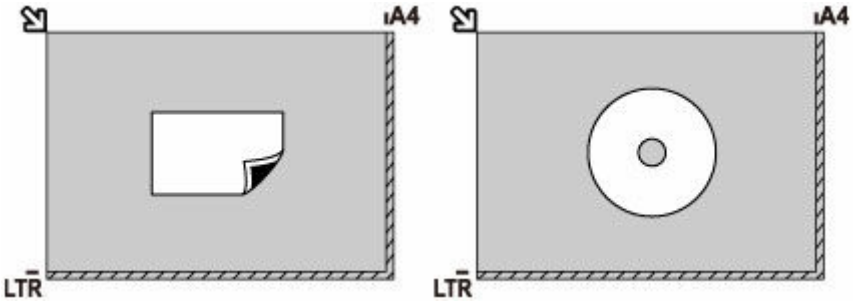

Loading Two or More Originals on Platen

Place the originals WITH THE SIDE TO SCAN FACING DOWN. Allow 0.40 in. (1 cm) or more space between the edges (diagonally striped area) of the platen and the originals, and between the originals. Portions placed on the diagonally striped area cannot be scanned.

You can place up to 12 items.

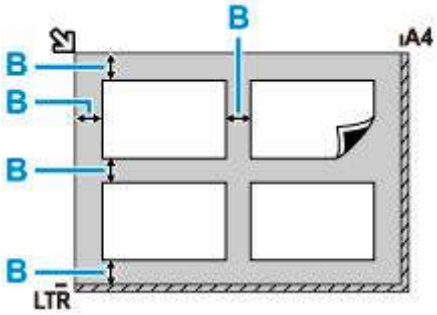

B: More than 0.40 in. (1 cm)

Note

- The Skew Correction function automatically compensates for the originals placed at an angle of up to approximately 10 degrees. Slanted photos with a long edge of 7.1 in. (180 mm) or more cannot be corrected.
- Non-rectangular or irregular shaped photos (such as cut out photos) may not be scanned properly.

Supported Originals

Platen

Item	Details
Types of originals	• Text document, magazine, or newspaper • Printed photo, postcard, business card, or disc (BD/DVD/CD, etc.) • Documents that are not suitable for the ADF
Size (width x height)	Max. 8.5 x 11.7 in. (216 x 297 mm)
Quantity	One or more sheets*
Thickness	Max. 0.4 in. (10 mm)

* Two or more originals can be loaded on the platen depending on the selected function.

➡ Loading Based on Use

In the ADF (Auto Document Feeder)

Item	Details
Kind of original	Plain-paper documents with multiple pages of the same size, thickness, and weight
Size	A4, Letter, Legal Duplex copying or 2-on-1/4-on-1 copying: A4/Letter only
Quantity	• A4/Letter: Max. 20 sheets (20 lb (75 g /m^2) paper), up to 0.08 in. (2 mm) high • Legal: Max. 5 sheets (20 lb (75 g /m^2) paper), up to 0.02 in. (0.5 mm) high
Thickness	0.003 to 0.005 in. (0.07 to 0.13 mm)
Weight	16.0 to 25.3 lb (60 to 95 g /m^2)

Note

- Make sure any liquids on documents, such as glue, ink, or correction fluid are dry before loading.

  Do not load glued documents in the ADF, even if the glue is dry, because this may cause paper jams.
- Remove all staples, paper clips, or other fasteners before feeding documents.
- Load Legal-sized documents in the ADF.
- Do not load these kinds of documents in the ADF, which may cause paper jams.
  - Wrinkled or creased documents
  - Curled documents
  - Torn documents
  - Documents with holes
  - Glued documents
  - Documents with sticky notes

- Documents on carbon paper
- Documents on coated paper
- Documents on onion skin or other thin paper
- Photos or excessively thick documents

Replacing Ink Tanks

- Replacing Ink Tanks
- Checking Ink Status on the Touch Screen
- Ink Tips

Replacing Ink Tanks

When remaining ink cautions or errors occur, the message will appear on the touch screen to inform you of the error. In this state, the printer cannot print or scan. Take appropriate action according to the message.

➡ When Error Occurred

Note

- For precautionary notes on handling ink tanks, see Notes on ink tanks.

Replacing Procedure

When you need to replace an ink tank, follow the procedure below.

1. Check that printer is turned on.

2. Open the scanning unit / cover.

   The print head holder moves to the replacement position.

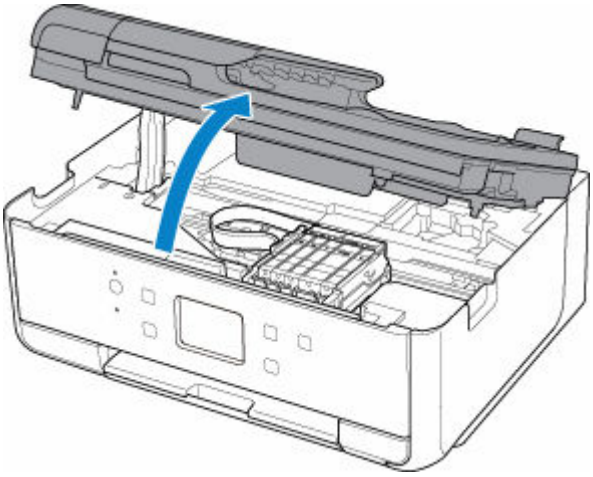

⚠ Caution

- Do not hold the print head holder to stop or move it forcibly. Do not touch the print head holder until it stops completely.

Important

- Do not touch the metallic parts or other parts inside the printer.

3. Remove the ink tank where the ink runs out.

   Push the tab (A) and lift the ink tank to remove.

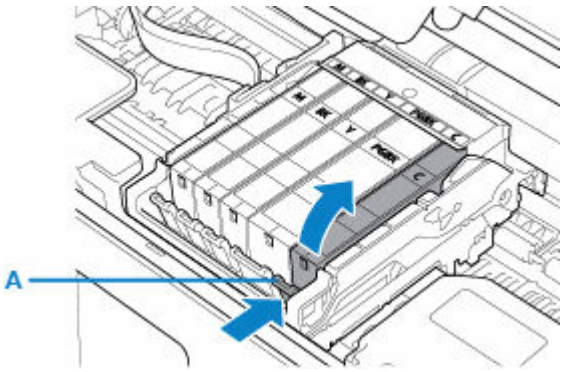

Important

- Do not touch other parts besides the ink tanks.

4. Take a new ink tank out of its package, remove the orange tape (B) completely, then remove the protective film (C) completely.

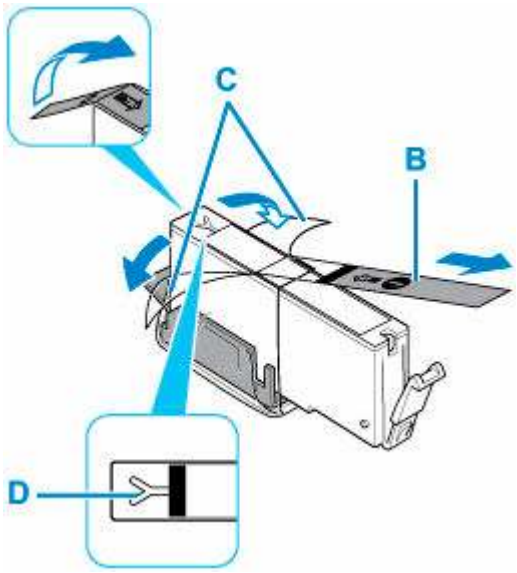

Important

- If the orange tape remains on the Y-shape air hole (D), ink may splash or the printer may not print properly.

5. Hold the ink tank with the orange protective cap (E) pointing up while being careful not to block the Y-shape air hole (D).

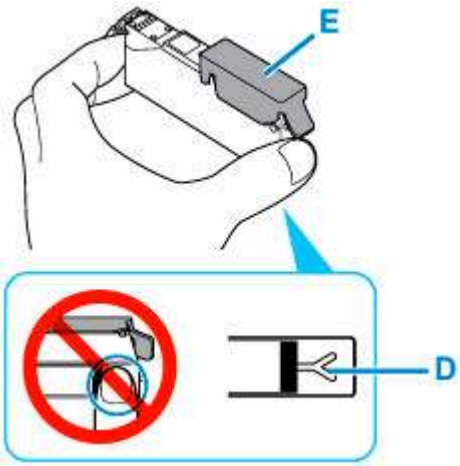

6. Lift up the tab on the orange protective cap (E) to remove it off GENTLY.

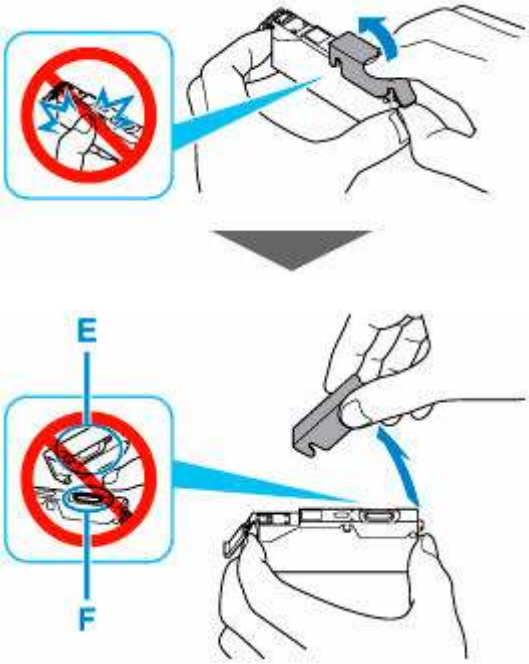

Important

- Do not push the sides of the ink tank. If you push the sides of the ink tank with the Y-shape air hole (D) blocked, ink may splash.
- Do not touch the inside of the orange protective cap (E) or the open ink port (F). The ink may stain your hands if you touch them.

7. Insert the front end of the ink tank into the print head at a slant.

Make sure that the position of the ink tank matches the label.

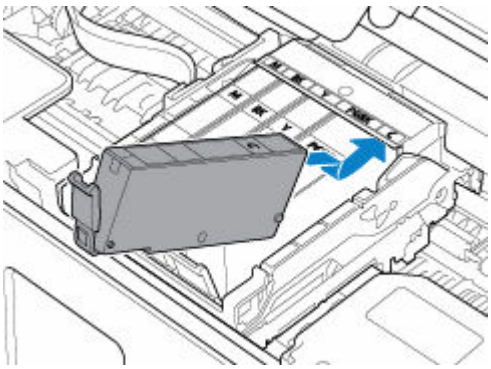

8. Press on the top of the ink tank until the ink tank snaps firmly into place.

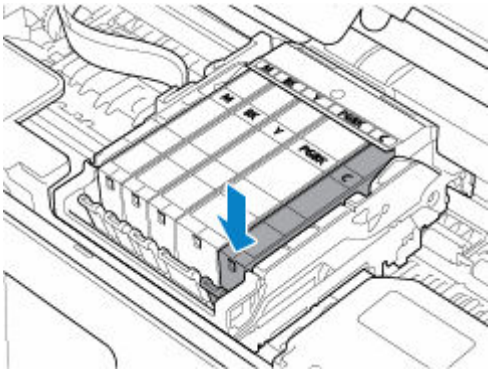

Important

- You cannot print if the ink tank is installed in the wrong position. Be sure to install the ink tank in the correct position according to the label on the print head holder.
- You cannot print unless all the ink tanks are installed. Be sure to install all the ink tanks.

9. Close the scanning unit / cover gently.

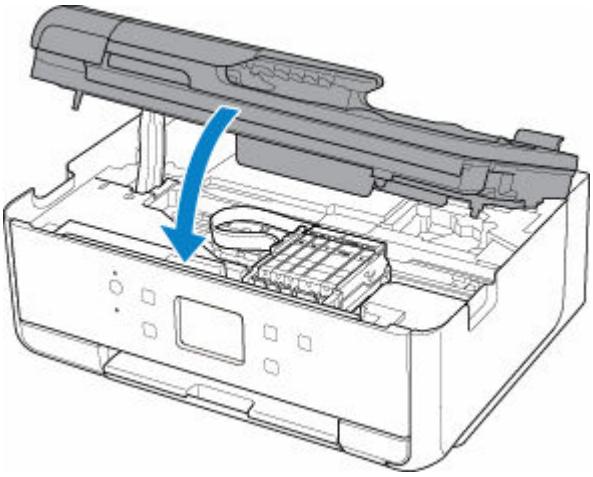

Caution

- When closing the scanning unit / cover, be careful not to get your fingers caught.

Note

- If the error message appears after the scanning unit / cover is closed, take appropriate action.

  ➡ When Error Occurred

- If the print head is out of alignment, as indicated by misaligned printed ruled lines or similar symptoms, align the print head.

Notes on ink tanks

Important

- If you remove an ink tank, replace it immediately. Do not leave the printer with the ink tank removed.
- Use a new ink tank for replacement. Installing a used ink tank may cause the nozzles to clog. Furthermore, with such an ink tank, the printer will not be able to inform you when to replace the ink tank properly.
- Once an ink tank has been installed, do not remove it from the printer and leave it out in the open. This will cause the ink tank to dry out, and the printer may not operate properly when it is reinstalled. To maintain optimal printing quality, use an ink tank within six months of first use.

Note

- Color ink may be consumed even when printing a black-and-white document or when black-and-white printing is specified. Every ink is also consumed in the standard cleaning and deep cleaning of the print head, which may be necessary to maintain the performance of the printer.

  When an ink tank is out of ink, replace it immediately with a new one.

  ➡ Ink Tips

Checking Ink Status on the Touch Screen

1. Check that printer is turned on, and display the HOME screen.

   If the HOME screen is not displayed, press the **HOME** button to display it.

2. Select (Hint) on HOME screen.

   ➡ Using Touch Screen

   The hint menu screen will appear.

3. Select **Estimated ink levels**.

   A symbol appears in the area A if there is any information about the remaining ink level.

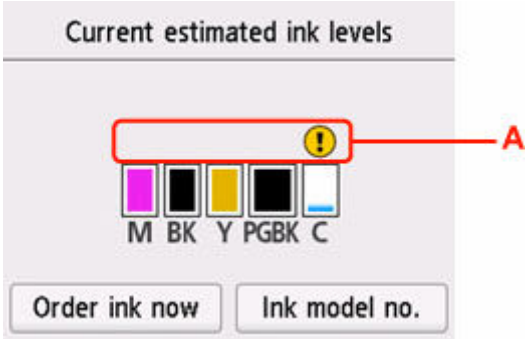

The ink is running low. Prepare a new ink tank.

Ink has run out. Replace the ink tank with a new ink tank.

This appears when remaining ink level is not known.

Note

- The above screen shows estimated ink levels.
- To access the ink purchasing site, select **Order ink now** on this screen and display the QR code. Cost of connecting to Internet is to be born by the customer.
- Selecting **Ink model no.** displays the **Ink model number** screen for checking ink numbers.
- You can also check the ink status on a screen of the touch screen displayed while printing.
- You can also check the ink status on the computer screen.
  - For Windows:

    ➡ Checking Ink Status from Your Computer
  - For macOS:

    ➡ Checking Ink Status from Your Computer

Ink Tips

How is ink used for various purposes other than printing?

Ink may be used for purposes other than printing.

When you use the Canon printer for the first time after you install the bundled ink tanks, the printer consumes a small amount of ink in the amount to enable printing by filling the nozzles of the Print Head with ink. For this reason, the number of sheets that can be printed with the first ink tanks is fewer than the succeeding ink tanks.

The printing costs described in the brochures or websites are based on the consumption data from not the first ink tank /ink cartridge but the succeeding ink tank /ink cartridge.

Ink is sometimes used to maintain the optimal printing quality.

To keep printer's performance, Canon printer performs cleaning automatically according to its condition. When the printer performs cleaning, a small amount of ink is consumed. In this case, all colors of ink may be consumed.

[Cleaning function]

The cleaning function helps the printer to suck air bubbles or ink itself from the nozzle and thus prevents print quality degradation or nozzle clogging.

Does black-and-white printing use color ink?

Black-and-white printing may use ink other than black ink depending on the type of printing paper or the settings of the printer driver. So, color ink is consumed even when printing in black-and-white.

Why does the printer have two black ink tanks?

There are two kinds of black ink in the printer: dye ink (BK) and pigment ink (PGBK).

The dye ink is used mainly for printing photos, illustration, etc., and the pigment ink is used for text-based documents. Each has different purposes so that even if one runs out, another will not be used instead. If either of them runs out, the ink tank replacement is required.

These two inks are automatically used depending on the type of printing paper or the settings of the printer driver. You cannot change the usage of these inks yourself.

If Printing Is Faint or Uneven

- Maintenance Procedure
- Printing the Nozzle Check Pattern
- Examining the Nozzle Check Pattern
- Cleaning the Print Head
- Deep Print Head Cleaning
- Aligning the Print Head

Maintenance Procedure

If print results are blurred, colors are not printed correctly, or print results are unsatisfactory (e.g. misaligned printed ruled lines), perform the maintenance procedure below.

Important

- Do not rinse or wipe the print head and ink tank. This can cause trouble with the print head and ink tank.

Note

- Make sure that the orange protective tape does not remain on the ink tank.

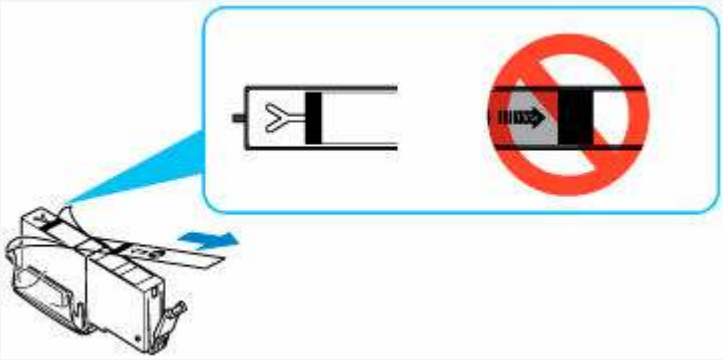

- Check the ink status.
  - ➡ Checking Ink Status on the Touch Screen
- For Windows, increasing the print quality in the printer driver settings may improve the print result.
  - ➡ Changing the Print Quality and Correcting Image Data

When the Print Results Are Blurred or Uneven:

Step1 Print the nozzle check pattern.

From the printer

➡ Printing the Nozzle Check Pattern

From the computer

- For Windows:
  - ➡ Printing a Nozzle Check Pattern
- For macOS:
  - ➡ Printing a Nozzle Check Pattern

Step2 Examine the nozzle check pattern.

If there are missing lines or horizontal white streaks in the pattern:

Step3 Clean the print head.

From the printer

➡ Cleaning the Print Head

From the computer

- For Windows:
  - ➡ Cleaning the Print Heads
- For macOS:
  - ➡ Cleaning the Print Heads

After cleaning the print head, print and examine the nozzle check pattern: ➡ Step1

If the problem is not resolved after performing from step 1 to step 3 twice:

Step4 Clean the print head deeply.

From the printer

➡ Deep Print Head Cleaning

From the computer

- For Windows:
  - ➡ Cleaning the Print Heads
- For macOS:
  - ➡ Cleaning the Print Heads

Note

- When you have performed the procedure until step 4 and the problem has not been resolved, turn off the power and clean the print head deeply again after 24 hours.

  If the problem is still not resolved, the print head may be damaged. Contact your nearest Canon service center to request a repair.

When the Print Results Are Not Even such as the Ruled Lines Are Misaligned:

Step Align the print head.

From the printer

➡ Aligning the Print Head

From the computer

- For Windows:
  - ➡ Adjusting Print Head Position Automatically
- For macOS:

➡ Adjusting Print Head Position

Printing the Nozzle Check Pattern

Print the nozzle check pattern to determine whether the ink ejects properly from the print head nozzle.

Note

- If the remaining ink level is low, the nozzle check pattern will not be printed correctly. Replace the ink tank whose ink is low.

You need to prepare: a sheet of A4 or Letter-sized plain paper

1. Check that printer is turned on.

2. Load a sheet of A4 or Letter-sized plain paper in the cassette.

   ➡ Loading Plain Paper in Cassette

3. Select (Setup) on HOME screen.

   ➡ Using Touch Screen

   The setup menu screen will appear.

4. Select **Maintenance**.

   The **Maintenance** screen will appear.

5. Select **Nozzle Check**.

   The confirmation screen will appear.

6. Select **Yes**.

   The nozzle check pattern will be printed and two pattern confirmation screens will appear on the touch screen.

7. Examine the nozzle check pattern.

Examining the Nozzle Check Pattern

Examine the nozzle check pattern, and clean the print head if necessary.

1. Check if there are missing lines in the pattern C or horizontal white streaks in the pattern D.

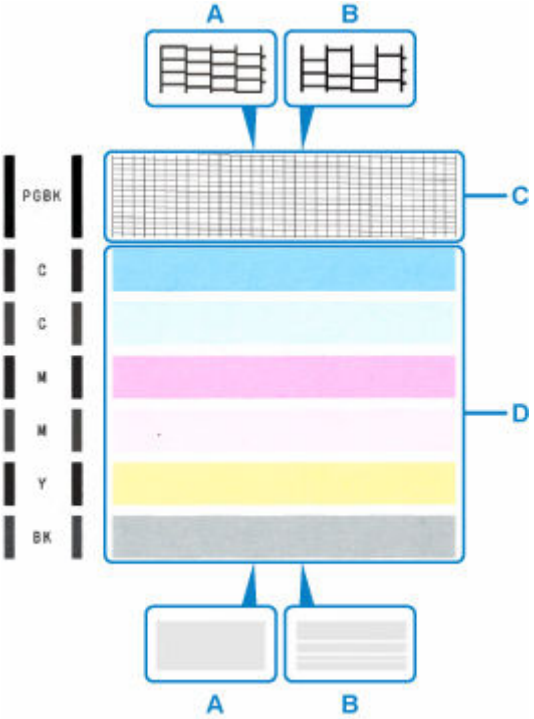

A: No missing lines/No horizontal white streaks
B: Lines are missing/Horizontal white streaks are present

2. Select the pattern that is closer to the printed nozzle check pattern on the confirmation screen.

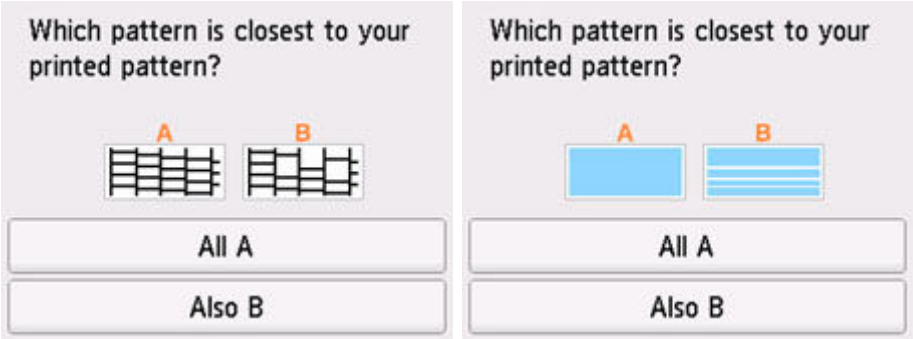

For A (no missing lines or no horizontal white streaks) in both the pattern C and pattern D:

The cleaning is not required. Select **All A**, confirm the message, then select **OK**.

The screen will return to the **Maintenance** screen.

For B (lines are missing or horizontal white streaks are present) in the pattern C or pattern D, or in both patterns:

The cleaning is required. Select **Also B**, then select **Yes** on the cleaning confirmation screen.

The printer starts cleaning the print head.

➡ Cleaning the Print Head

If the pattern D or any color in the pattern C is not printed:

(Example: Magenta pattern is not printed)

The cleaning is required. Select **Also B**, then select **Yes** on the cleaning confirmation screen.

The printer starts cleaning the print head.

➡ Cleaning the Print Head

Cleaning the Print Head

Clean the print head if lines are missing or if horizontal white streaks are present in the printed nozzle check pattern. Cleaning unclogs the nozzles and restores the print head condition. Cleaning the print head consumes ink, so clean the print head only when necessary.

You need to prepare: a sheet of A4 or Letter-sized plain paper

1. Check that printer is turned on.

2. Load a sheet of A4 or Letter-sized plain paper in the cassette.

   ➡ Loading Plain Paper in Cassette

3. Select (Setup) on HOME screen.

   ➡ Using Touch Screen

   The setup menu screen will appear.

4. Select **Maintenance**.

   The **Maintenance** screen will appear.

5. Select **Cleaning**.

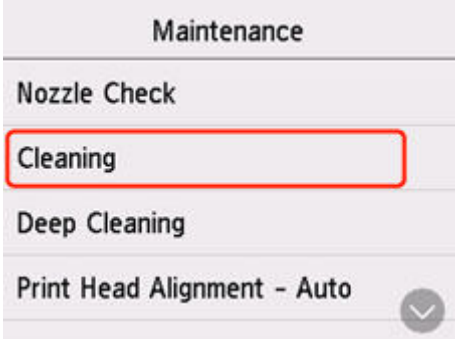

   The confirmation screen will appear.

6. Select **Yes**.

   The printer starts cleaning the print head.

   Do not perform any other operations until the printer completes the cleaning of the print head. This takes about 1 minute.

   The pattern print confirmation screen will appear.

7. Select **Yes**.

   The nozzle check pattern will be printed.

8. Examine the nozzle check pattern.

Note

- If the problem is not resolved after cleaning the print head twice, clean the print head deeply.

Deep Print Head Cleaning

If print quality does not improve by the standard cleaning of the print head, clean the print head deeply. Cleaning the print head deeply consumes more ink than the standard cleaning of the print head, so clean the print head deeply only when necessary.

You need to prepare: a sheet of A4 or Letter-sized plain paper

1. Check that printer is turned on.

2. Load a sheet of A4 or Letter-sized plain paper in the cassette.

   ➡ Loading Plain Paper in Cassette

3. Select (Setup) on HOME screen.

   ➡ Using Touch Screen

   The setup menu screen will appear.

4. Select **Maintenance**.

   The **Maintenance** screen will appear.

5. Select **Deep Cleaning**.

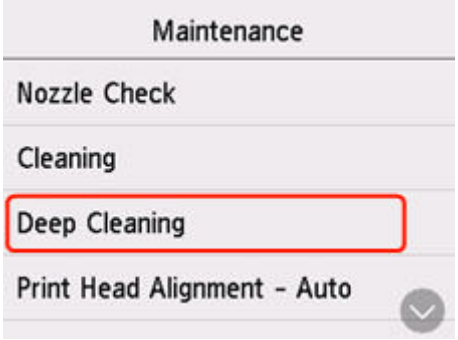

   The confirmation screen will appear.

6. Select **Yes**.

   The printer starts cleaning the print head deeply.

   Do not perform any other operations until the printer completes the deep cleaning of the print head. This takes about 1 to 2 minutes.

   The pattern print confirmation screen will appear.

7. Select **Yes**.

   The nozzle check pattern will be printed.

8. When the completion message appears, select **OK**.

9. Examine the nozzle check pattern.

If a particular color is not printed properly, replace the ink tank of that color.

If the problem is not resolved, turn off the power and clean the print head deeply again after 24 hours. Do not unplug the power cord when turning off the power.

If the problem is still not resolved, the print head may be damaged. Contact your nearest Canon service center to request a repair.

Aligning the Print Head

If printed ruled lines are misaligned or print results are otherwise unsatisfactory, adjust the print head position.

Note

- If the remaining ink level is low, the print head alignment sheet will not be printed correctly.

  Replace the ink tank whose ink is low.

You need to prepare: two sheets of A4 or Letter-sized plain paper

1. Check that printer is turned on.

2. Load two sheets of A4 or Letter-sized plain paper in cassette.

   ➡ Loading Plain Paper in Cassette

3. Select (Setup) on HOME screen.

   ➡ Using Touch Screen

   The setup menu screen will appear.

4. Select **Maintenance**.

   The **Maintenance** screen will appear.

5. Select **Print Head Alignment - Auto**.

   The confirmation screen will appear.

6. Confirm the message, then select **Yes**.

   The print head alignment sheet will be printed.

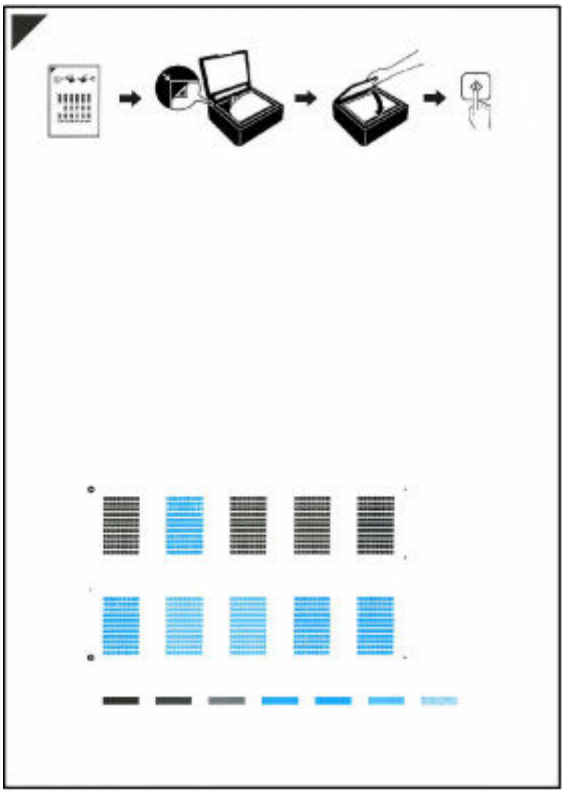

Important

- Do not touch any printed part on the print head alignment sheet. If the sheet is stained or wrinkled, it may not be scanned properly.

7. Confirm the message, then load the print head alignment sheet on the platen.

Load the print head alignment sheet WITH THE PRINTED SIDE FACING DOWN and align the mark ◤ on the upper left corner of the sheet with the alignment mark ⇲.

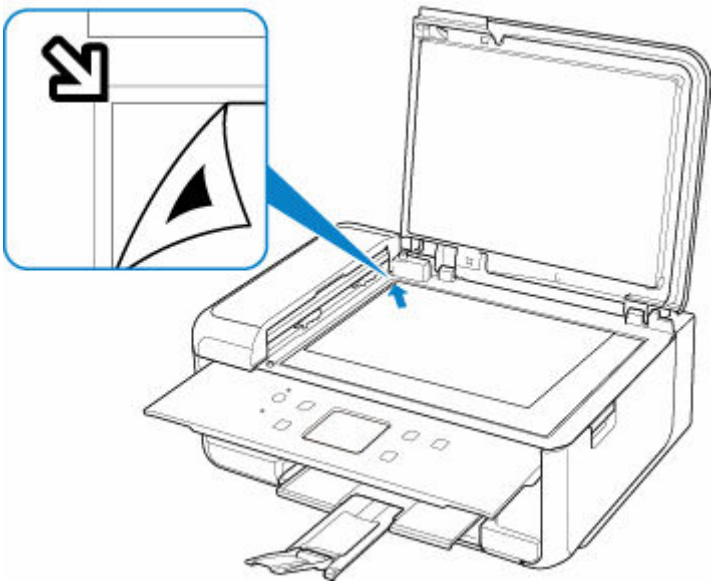

8. Close the document cover gently, then select **OK**.

The printer starts scanning the print head alignment sheet, and the print head position will be adjusted automatically.

Important

- Do not open the document cover or move the print head alignment sheet on the platen until adjusting the print head position is complete.
- If the error message appears on the touch screen, select **OK** to release the error, then take appropriate action.

  ➡ When Error Occurred

9. When the completion message appears, select **OK**.

Remove the print head alignment sheet on the platen.

Note

- For Windows, when the print results are still not satisfactory after adjusting the print head position as described above, adjust the print head position manually from the computer.

  ➡ Adjusting Print Head Position Manually

- To print and check the current head position adjustment values, select **Print the Head Alignment Value** on the **Maintenance** screen.

Performing Maintenance Functions from Your Computer (macOS)

- Opening Remote UI for Maintenance
- Cleaning the Print Heads
- Adjusting Print Head Position
- Checking Ink Status from Your Computer

Opening Remote UI for Maintenance

You can perform maintenance of printer and change the settings from a Remote UI.
The following is the procedure to open a Remote UI.

1. Open **System Preferences**, and select **Printers & Scanners**

2. Select your model from the printer list, and click **Options & Supplies...**

3. Click **Show Printer Webpage...** in **General** tab

   Remote UI starts.

   Note

   - The password may have to be entered after Remote UI starts. In such a case, enter the password and click **OK**. In case you do not know the password, click **Passwords and cookies**.

Related Topics

- Cleaning the Print Heads
- Adjusting Print Head Position
- Checking Ink Status from Your Computer
- Printing a Nozzle Check Pattern
- Managing the Printer Power
- Changing the Printer Operation Mode
- Reducing the Printer Noise

Cleaning the Print Heads

The print head Cleaning and Deep Cleaning functions allow you to clear up clogged print head nozzles. Perform print head Cleaning if printing results are not satisfactory or if a specific color fails to print, even though there is enough ink.

Cleaning

1. Select **Utilities** from Remote UI

2. Click **Cleaning**

   Before performing Cleaning, check the following items:

   Check whether the printer is on and open the printer's cover.
   Check the following items for each ink. Then, if necessary, perform **Cleaning**.

   - Is there ink remaining?
   - Did you push in the ink completely until you heard a clicking sound?
   - If the orange tape is there, has it been peeled off completely?
     Any remaining tape will hinder ink output.
   - Did you install the inks in their correct positions?

3. Perform Cleaning

   Click **Yes**.

   Print head Cleaning starts.

4. Complete Cleaning

   Next, the message for Nozzle Check pattern printing is displayed.

5. Check the results

   To check whether the print quality has improved, click **Yes**. To cancel the check process, click **No**.

   If cleaning the head once does not resolve the print head problem, clean it once more.

Important

- **Cleaning** consumes a small amount of ink.
  Cleaning the print head frequently will rapidly deplete your printer's ink supply. Perform Cleaning only when necessary.

Deep Cleaning

Deep Cleaning is more thorough than Cleaning. Perform Deep Cleaning when two **Cleaning** attempts do not resolve the print head problem.

1. Select **Utilities** from Remote UI

2. Click **Deep Cleaning**

   Before performing Deep Cleaning, check the following items:

   Check whether the printer is on and open the printer's cover.
   Check the following items for each ink. Then, if necessary, perform **Deep Cleaning**.

   - Is there ink remaining?
   - Did you push in the ink completely until you heard a clicking sound?
   - If the orange tape is there, has it been peeled off completely?
     Any remaining tape will hinder ink output.
   - Did you install the inks in their correct positions?

3. Perform Deep Cleaning

   Click **Yes**.

   Print head Deep Cleaning starts.

4. Complete Deep Cleaning

   Next, the message for Nozzle Check pattern printing is displayed.

5. Check the results

   To check whether the print quality has improved, click **Yes**. To cancel the check process, click **No**.

Important

- **Deep Cleaning** consumes a larger amount of ink than **Cleaning**.
  Cleaning the print head frequently will rapidly deplete your printer's ink supply. Perform Cleaning only when necessary.

Note

- If there is no sign of improvement after **Deep Cleaning**, turn off the printer, wait 24 hours, and then perform **Deep Cleaning** again. If there is still no sign of improvement, the ink may have run out or the print head may be worn. For details on the remedial action to be taken, see "Ink Does Not Come Out."

Related Topic

➡ Printing a Nozzle Check Pattern

Adjusting Print Head Position

Any error in the print head installation position can cause color and line shifts. Adjusting the print head position improves print results.

Print Head Alignment - Auto

1. Select **Utilities** from Remote UI

2. Click **Print Head Alignment - Auto**

   A message appears.

3. Load paper in printer

   Load one sheet of A4 size or Letter size plain paper into the cassette.

4. Run head position adjustment

   Check that the printer power is on, and then click **Yes**.
   Head alignment starts. Proceed with the operations in accordance with the messages on the screen.

   Important

   - Do not open the scanning unit / cover while printing is in progress; otherwise, printing will stop.

Note

- You can print and check the current settings by clicking on **Print the head alignment value**.

Checking Ink Status from Your Computer

You can check the detailed information such as the remaining ink level and the ink tank types of your model.

If you select **Printer status** from Remote UI, the ink status appears as an illustration.

Estimated ink levels

You can check the types and levels of ink.
When ink levels are running low or an error occurs because there is no ink, a notification icon will appear.

Ink model number

You can look up the correct ink tank for your printer.

Note

- To check the ink status, you can also display the pop-up menu of the Print dialog and select **Supply Levels**.

Cleaning

- Cleaning Exterior Surfaces
- Cleaning Platen and Document Cover
- Cleaning the ADF (Auto Document Feeder)
- Cleaning Paper Feed Rollers
- Cleaning Inside the Printer (Bottom Plate Cleaning)
- Cleaning Cassette Pads

Cleaning Paper Feed Rollers

If the paper feed roller is dirty or paper powder is attached to it, paper may not be fed properly.

In this case, clean the paper feed roller. Cleaning will wear out the paper feed roller, so perform this only when necessary.

You need to prepare: three sheets of A4 or Letter-sized plain paper

1. Check that printer is turned on.

2. Select (Setup) on HOME screen.

   ➡ Using Touch Screen

   The setup menu screen will appear.

3. Select **Maintenance**.

   The **Maintenance** screen will appear.

4. Select **Roller Cleaning**.

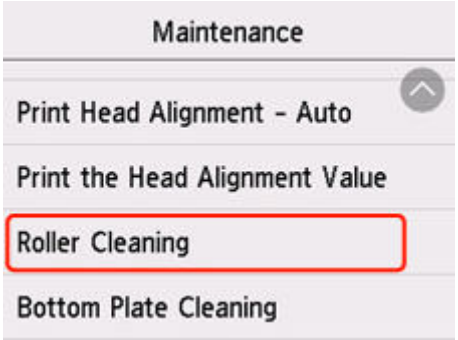

   The confirmation screen will appear.

5. Select **Yes**.

6. Select **Rear tray** or **Cassette** to clean the paper feed roller.

7. Follow the message to remove any paper from the paper source.

   If you clean the paper feed roller of cassette, remove any paper from the cassette, then push it back.

8. Select **OK**.

   The paper feed roller will rotate as it is cleaned without paper.

9. Make sure that the paper feed roller has stopped rotating, then follow the message to load the three sheets of A4 or Letter-sized plain paper.

- Loading Plain Paper / Photo Paper in Rear Tray
- Loading Plain Paper in Cassette

10. Select **OK**.

The printer starts cleaning. The cleaning will be complete when the paper is ejected.

11. When the completion message appears, select **OK**.

If the problem is not resolved after cleaning the paper feed roller, contact your nearest Canon service center to request a repair.

Cleaning Inside the Printer (Bottom Plate Cleaning)

Remove stains from the inside of the printer. If the inside of the printer becomes dirty, printed paper may get dirty, so we recommend performing cleaning regularly.

You need to prepare: a sheet of A4 or Letter-sized plain paper*

* Be sure to use a new piece of paper.

1. Check that printer is turned on.

2. Select (Setup) on HOME screen.

   ➡ Using Touch Screen

   The setup menu screen will appear.

3. Select **Maintenance**.

   The **Maintenance** screen will appear.

4. Select **Bottom Plate Cleaning**.

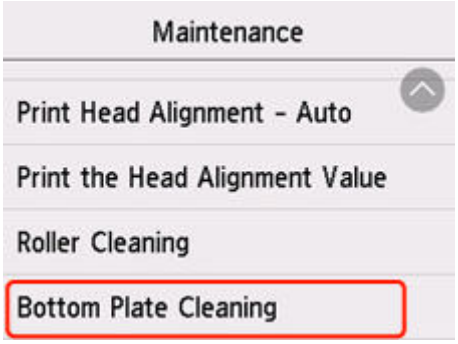

   The confirmation screen will appear.

5. Select **Yes**.

6. Follow the message to remove any paper from the cassette, then select **OK**.

7. Fold a single sheet of A4 or Letter-sized plain paper in half widthwise, then unfold the paper.

8. Fold one side of the opened paper in another half, aligning the edge with the center crease, unfold the paper, then select **OK**.

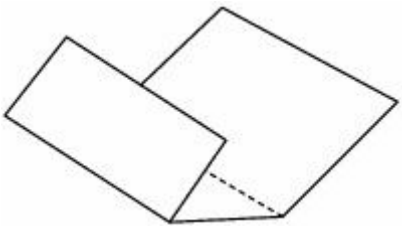

9. Load only this sheet of paper in the cassette with the ridges of the creases facing up and the edge of the half with no crease facing to the far side.

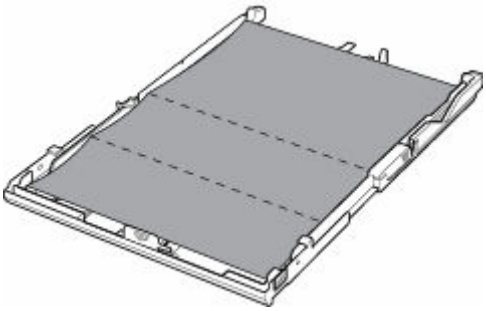

10. Mount cassette cover and insert cassette into printer.

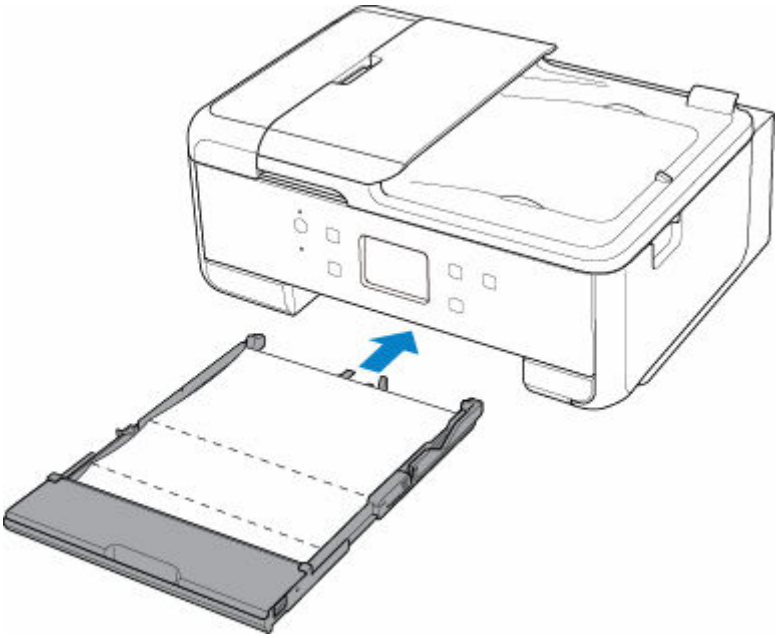

11. Select **OK**.

    The paper cleans the inside of the printer as it feeds through the printer.

    Check the folded parts of the ejected paper. If they are smudged with ink, perform Bottom Plate Cleaning again.

12. When the completion message appears, select **OK**.

Note

- When performing Bottom Plate Cleaning again, be sure to use a new piece of paper.

If the problem is not resolved after performing cleaning again, the protrusions inside the printer may be stained. Wipe off any ink from the protrusions using a cotton swab or the like.

Important

- Be sure to turn off the power and unplug the power cord before cleaning the printer.

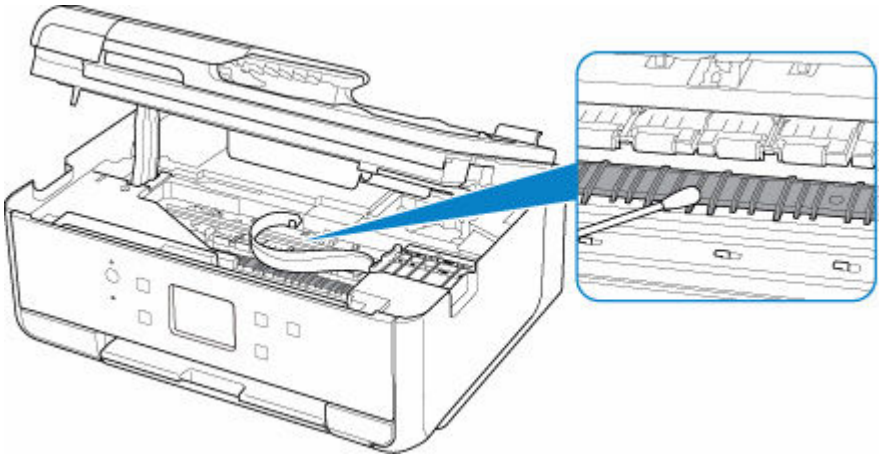

Overview

- **Safety**
  - Safety Precautions
  - Regulatory Information
  - WEEE
- **Handling Precautions**
  - Canceling Print Jobs
  - Legal Restrictions on Scanning/Copying
  - Printer Handling Precautions
  - Transporting Your Printer
  - When Repairing, Lending, or Disposing of the Printer
  - Keeping Print Quality High
- **Main Components and Their Use**
  - Main Components
  - Power Supply
  - Using Touch Screen
- **Changing Settings**
  - Changing Printer Settings from Your Computer (Windows)
  - Changing Printer Settings from Your Computer (macOS)
  - Changing Settings from Operation Panel
- **Specifications**

Safety

- Safety Precautions
- Regulatory Information
- WEEE

Safety Precautions

Safety Precautions

- This manual contains important notices and safety precautions about your printer.

  Do not use the printer in ways other than described in the accompanying manuals, as this may result in fire, electric shock or other unexpected accidents.

  Safety standard marks and declarations are only valid for the supported voltages and frequencies in the applicable countries or regions.

⚠ Warning

- Users with cardiac pacemakers:

  This product emits a low-level magnetic flux. If you feel abnormalities, please move away from the product and consult your doctor.

- Do not use the printer in the following cases:

  Stop use immediately, unplug the printer and call your local service representative to request repair.

  - Metal objects or liquids are spilt inside the printer.
  - The printer emits smoke, strange odors, or makes unusual noises.
  - The power cord or plug overheat or are broken, bent or damaged in any way.

- Failure to adhere to the following may result in fire, electric shock, or injury:
  - Do not place product close to the flammable solvents such as alcohol or thinner.
  - Do not open or modify the printer.
  - Use only the power cord/cables that came with your printer. Do not use these cables with other devices.
  - Do not plug in to voltages or frequencies other than those specified.
  - Plug the power cord into the socket completely.
  - Do not plug in or unplug the power cord with wet hands.
  - Do not damage the power cord by twisting, bundling, tying, pulling or excessively bending it.
  - Do not place heavy objects on the power cord.
  - Do not connect multiple power cords to a single electrical outlet. Do not use multiple extension cords.
  - Do not leave the printer plugged in during lightning storms.
  - Always unplug the power cord and cables when cleaning. Do not use flammable sprays or liquids such as alcohol or thinners for cleaning.
  - Unplug the power cord once a month to check that it is not overheating, rusted, bent, scratched, split, or otherwise damaged.

⚠ Caution

- Do not put your hands inside the printer while printing.
- Do not touch the print head or other metal parts immediately after printing.
- Ink
  - Keep ink out of reach of children.
  - If ink is accidentally licked or swallowed, rinse out your mouth and drink one or two glasses of water. If irritation or discomfort occurs, obtain medical advice immediately.

- In case ink gets in contact with eyes, rinse with water immediately. In case ink gets in contact with skin, wash with soap and water immediately. If irritation to eyes or skin persists, obtain medical advice immediately.

- Moving the printer
  - Do not hold the printer by the cassette. Hold the printer by its sides and carry it with both hands.

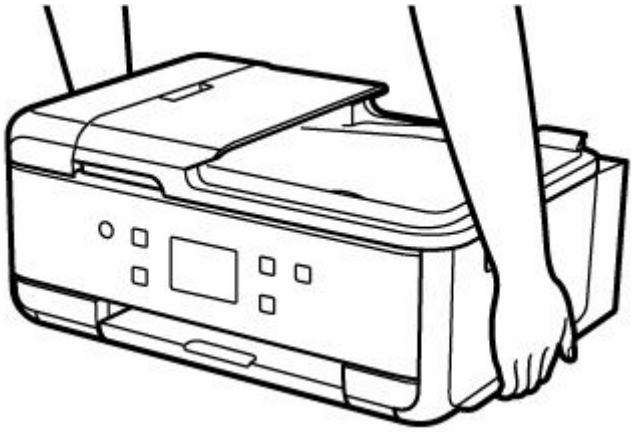

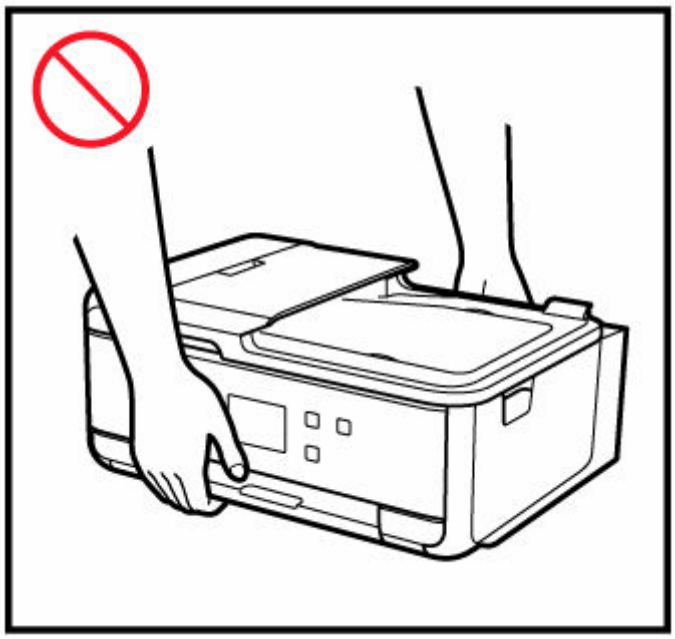

General Notices

Choosing a Location

Refer to "Specifications" in the Online manual for details on operating environment.

- Do not install the printer in a location that is unstable or subject to excessive vibration.
- Do not install the printer in locations that get very hot (direct sunlight, or close to a heating source), very humid or dusty locations, or outdoors.
- Do not place the printer on a thick rug or carpet.
- Do not place the printer flush against a wall.

Power Supply

- Keep the area around the power outlet clear at all times so you can easily unplug the power cord if necessary.
- Never remove the plug by pulling on the cord.

General Notices

- Do not tilt the printer, stand it on end, or turn it upside down. This may cause ink to leak.
- Do not place anything on top of the printer. Be especially careful to avoid metal objects such as paper clips and staples, and containers holding flammable liquids such as alcohol or thinner.
- Be sure to observe the following when loading the original on the platen. Failure to observe the following may cause the scanner to malfunction or the platen glass to break.
  - Do not place any objects weighing 4.4 lb (2.0 kg) or more on the platen glass.
  - Do not put any pressure of 4.4 lb (2.0 kg) or more on the platen glass, such as pressing down the original.
- Do not attempt to open, disassemble or modify the ink tanks. Ink may leak and damage your printer.
- Do not throw print heads or ink tanks in the fire.

Regulatory Information

IMPORTANT SAFETY INSTRUCTIONS

SAVE THESE INSTRUCTIONS

When using your telephone equipment, basic safety precautions should always be followed to reduce the risk of fire, electric shock and injury to persons, including the following:

1. Do not use this product near water, for example, near a bath tub, wash bowl, kitchen sink or laundry tub, in a wet basement or near a swimming pool.
2. Avoid using this product during an electrical storm. There may be a remote risk of electric shock from lightning.
3. Do not use this product to report a gas leak in the vicinity of the leak.

"CAUTION - To reduce the risk of fire, use only No. 26 AWG or larger telecommunication line cord."

Interference

Do not use the printer around medical equipment or other electronic devices. Signals from the printer may interfere with the correct operation of these devices.

WEEE

Only for the United Kingdom

This symbol indicates that this product is not to be disposed of with your household waste, according to the UK Waste Electrical and Electronic Equipment Regulations. This product should be handed over to a designated collection point, e.g., on an authorized one-for-one basis when you buy a new similar product or to an authorized collection site for recycling waste electrical and electronic equipment (EEE). Improper handling of this type of waste could have a possible negative impact on the environment and human health due to potentially hazardous substances that are generally associated with EEE. At the same time, your cooperation in the correct disposal of this product will contribute to the effective usage of natural resources. For more information about where you can drop off your waste equipment for recycling, please contact your local city office, waste authority, approved WEEE scheme or your household waste disposal service. For more information regarding return and recycling of WEEE products, please visit www.canon-europe.com/sustainability/approach/.

Only for European Union and EEA (Norway, Iceland and Liechtenstein)

This symbol indicates that this product is not to be disposed of with your household waste, according to the WEEE Directive (2012/19/EU) and national legislation. This product should be handed over to a designated collection point, e.g., on an authorized one-for-one basis when you buy a new similar product or to an authorized collection site for recycling waste electrical and electronic equipment (EEE). Improper handling of this type of waste could have a possible negative impact on the environment and human health due to potentially hazardous substances that are generally associated with EEE. At the same time, your cooperation in the correct disposal of this product will contribute to the effective usage of natural resources. For more information about where you can drop off your waste equipment for recycling, please contact your local city office, waste authority, approved WEEE scheme or your household waste disposal service. For more information regarding return and recycling of WEEE products, please visit www.canon-europe.com/weee.

Nur für Europäische Union und EWR (Norwegen, Island und Liechtenstein)

Dieses Symbol weist darauf hin, dass dieses Produkt gemäß der EU-Richtlinie über Elektro- und Elektronik-Altgeräte (2012/19/EU) und nationalen Gesetzen nicht über den Hausmüll entsorgt werden

darf. Dieses Produkt muss bei einer dafür vorgesehenen Sammelstelle abgegeben werden. Dies kann z. B. durch Rückgabe beim Kauf eines ähnlichen Produkts oder durch Abgabe bei einer autorisierten Sammelstelle für die Wiederaufbereitung von Elektro- und Elektronik-Altgeräten geschehen. Der unsachgemäße Umgang mit Altgeräten kann aufgrund potentiell gefährlicher Stoffe, die generell mit Elektro- und Elektronik-Altgeräten in Verbindung stehen, negative Auswirkungen auf die Umwelt und die menschliche Gesundheit haben. Durch die umweltgerechte Entsorgung dieses Produkts tragen Sie außerdem zu einer effektiven Nutzung natürlicher Ressourcen bei. Informationen zu Sammelstellen für Altgeräte erhalten Sie bei Ihrer Stadtverwaltung, dem öffentlich-rechtlichen Entsorgungsträger, einer autorisierten Stelle für die Entsorgung von Elektro- und Elektronik-Altgeräten oder Ihrem örtlichen Entsorgungsunternehmen. Weitere Informationen zur Rückgabe und Entsorgung von Elektro- und Elektronik-Altgeräten finden Sie unter www.canon-europe.com/weee.

Zusatzinformationen für Deutschland:

Dieses Produkt kann durch Rückgabe an den Händler unter den in der Verordnung des Elektro- und Elektronikgerätegesetzes beschriebenen Bedingungen abgegeben werden.
Als Endbenutzer und Besitzer von Elektro- oder Elektronikgeräten sind Sie verpflichtet:

- diese einer vom unsortierten Siedlungsabfall getrennten Erfassung zuzuführen,
- Altbatterien und Altakkumulatoren, die nicht von Altgerät umschlossen sind, sowie Lampen, die zerstörungsfrei aus dem Altgerät entnommen werden können, vor der Abgabe an einer Erfassungsstelle vom Altgerät zerstörungsfrei zu trennen,
- personenbezogener Daten auf den Altgeräten vor der Entsorgung zu löschen.

Die Bedeutung von dem Symbol der durchgestrichenen Abfalltonne auf Rädern finden Sie oben in dieser Beschreibung.

Die Vertreiber von Elektro- oder Elektronikgeräten haben die Pflicht zur unentgeltlichen Rücknahme von Altgeräten. Die Vertreiber haben die Endnutzer über die von ihnen geschaffenen Möglichkeiten der Rückgabe von Altgeräten zu informieren.

Union Européenne, Norvège, Islande et Liechtenstein uniquement.

Ce symbole indique que ce produit ne doit pas être jeté avec les ordures ménagères, conformément à la directive DEEE (2012/19/UE) et à la réglementation de votre pays. Ce produit doit être confié au distributeur à chaque fois que vous achetez un produit neuf similaire, ou à un point de collecte mis en place par les collectivités locales pour le recyclage des Déchets des Équipements Électriques et Électroniques (DEEE). Le traitement inapproprié de ce type de déchet risque d'avoir des répercussions sur l'environnement et la santé humaine, du fait de la présence de substances potentiellement dangereuses généralement associées aux équipements électriques et électroniques. Parallèlement, votre entière coopération dans le cadre de la mise au rebut correcte de ce produit favorisera une meilleure utilisation des ressources naturelles. Pour plus d'informations sur les points de collecte des équipements à recycler, contactez vos services municipaux, les autorités locales compétentes, le plan DEEE approuvé ou le service d'enlèvement des ordures ménagères. Pour plus d'informations sur le retour et le recyclage des produits DEEE, consultez le site: www.canon-europe.com/weee.

Uitsluitend bestemd voor de Europese Unie en EER (Noorwegen, IJsland en Liechtenstein)

Dit symbool geeft aan dat dit product in overeenstemming met de AEEA-richtlijn (2012/19/EU) en de nationale wetgeving niet mag worden afgevoerd met het huishoudelijk afval. Dit product moet worden ingeleverd bij een aangewezen, geautoriseerd inzamelpunt, bijvoorbeeld wanneer u een nieuw gelijksoortig product aanschaft, of bij een geautoriseerd inzamelpunt voor hergebruik van elektrische en elektronische apparatuur (EEA). Een onjuiste afvoer van dit type afval kan leiden tot negatieve effecten op het milieu en de volksgezondheid als gevolg van potentieel gevaarlijke stoffen die veel voorkomen in elektrische en elektronische apparatuur (EEA). Bovendien werkt u door een juiste afvoer van dit product mee aan het effectieve gebruik van natuurlijke hulpbronnen. Voor meer informatie over waar u uw afgedankte apparatuur kunt inleveren voor recycling kunt u contact opnemen met het gemeentehuis in uw woonplaats, de reinigingsdienst, of het afvalverwerkingsbedrijf. U kunt ook het schema voor de afvoer van afgedankte elektrische en elektronische apparatuur (AEEA) raadplegen. Ga voor meer informatie over het inzamelen en recyclen van afgedankte elektrische en elektronische apparatuur naar www.canon-europe.com/weee.

Sólo para la Unión Europea y el Área Económica Europea (Noruega, Islandia y Liechtenstein)

Este símbolo indica que este producto no debe desecharse con los desperdicios domésticos, de acuerdo con la directiva RAEE (2012/19/UE) y con la legislación nacional. Este producto debe entregarse en uno de los puntos de recogida designados, como por ejemplo, entregándolo en el lugar de venta al comprar un producto similar o depositándolo en un lugar de recogida autorizado para el reciclado de residuos de aparatos eléctricos y electrónicos (RAEE). La manipulación inapropiada de este tipo de desechos podría tener un impacto negativo en el entorno y la salud humana, debido a las sustancias potencialmente peligrosas que normalmente están asociadas con los RAEE. Al mismo tiempo, su cooperación a la hora de desechar correctamente este producto contribuirá a la utilización eficazde los recursos naturales. Para más información sobre cómo puede eliminar el equipo para su reciclado, póngase en contacto con las autoridades locales, con las autoridades encargadas de los desechos, con un sistema de gestión RAEE autorizado o con el servicio de recogida de basuras doméstico. Si desea más información acerca de la devolución y reciclado de RAEE, visite la web www.canon-europe.com/weee.

Només per a la Unió Europea i a l'Espai Econòmic Europeu (Noruega, Islàndia i Liechtenstein)

Aquest símbol indica que aquest producte no s'ha de llençar a les escombraries de la llar, d'acord amb la Directiva RAEE (2012/19/UE) i la legislació nacional. Aquest producte s'hauria de lliurar en un dels punts de recollida designats, com per exemple, intercanviant-lo un per un en comprar un producte similar o lliurant-lo en un lloc de recollida autoritzat per al reciclatge de residus d'aparells elèctrics i electrònics (AEE). La manipulació inadequada d'aquest tipus de residus podria tenir un impacte negatiu en l'entorn i en la salut humana, a causa de les substàncies potencialment perilloses que normalment estan associades als AEE. Així mateix, la vostra cooperació a l'hora de llençar correctament aquest producte contribuirà a la utilització efectiva dels recursos naturals. Per a més informació sobre els punts on podeu lliurar aquest producte per procedir al seu reciclatge, adreceu-vos a la vostra oficina municipal, a les autoritats encarregades dels residus, al pla de residus homologat per la RAEE o al servei de recollida de deixalles domèstiques de la vostra localitat. Per a més informació sobre la devolució i el reciclatge de productes RAEE, visiteu www.canon-europe.com/weee.

Solo per Unione Europea e SEE (Norvegia, Islanda e Liechtenstein)

Questo simbolo indica che il prodotto deve essere oggetto di raccolta separata in conformità alla Direttiva RAEE (2012/19/UE) e alla normativa locale vigente. Il prodotto deve essere smaltito presso un centro di raccolta differenziata, un distributore autorizzato che applichi il principio dell'"uno contro uno", ovvero del ritiro della vecchia apparecchiatura elettrica al momento dell'acquisto di una nuova, o un impianto autorizzato al riciclaggio dei rifiuti di apparecchiature elettriche ed elettroniche. La gestione impropria di questo tipo di rifiuti può avere un impatto negativo sull'ambiente e sulla salute umana causato dalle sostanze potenzialmente pericolose che potrebbero essere contenute nelle apparecchiature elettriche ed elettroniche. Un corretto smaltimento di tali prodotti contribuirà inoltre a un uso efficace delle risorse naturali ed eviterà di incorrere nelle sanzioni amministrative di cui all'art. 255 e successivi del Decreto Legislativo n. 152/06. Per ulteriori informazioni sullo smaltimento e il recupero dei Rifiuti di Apparecchiature Elettriche ed Elettroniche, consultare la Direttiva RAEE, rivolgersi alle autorità competenti, oppure visitare il sito www.canon-europe.com/weee.

Apenas para a União Europeia e AEE (Noruega, Islândia e Liechtenstein)

Este símbolo indica que o produto não deve ser colocado no lixo doméstico, de acordo com a Directiva REEE (2012/19/UE) e a legislação nacional. Este produto deverá ser colocado num ponto de recolha designado, por exemplo, num local próprio autorizado quando adquirir um produto semelhante novo ou num local de recolha autorizado para reciclar resíduos de equipamentos eléctricos e electrónicos (EEE). O tratamento inadequado deste tipo de resíduo poderá causar um impacto negativo no ambiente e na saúde humana devido às substâncias potencialmente perigosas normalmente associadas aos equipamentos eléctricos e electrónicos. Simultaneamente, a sua cooperação no tratamento correcto deste produto contribuirá para a utilização eficaz dos recursos naturais. Para mais informações sobre os

locais onde o equipamento poderá ser reciclado, contacte os serviços locais, a autoridade responsável pelos resíduos, o esquema REEE aprovado ou o serviço de tratamento de lixo doméstico. Para mais informações sobre a devolução e reciclagem de produtos REEE, vá a www.canon-europe.com/weee.

Gælder kun i Europæiske Union og EØS (Norge, Island og Liechtenstein)

Dette symbol angiver, at det pågældende produkt ikke må bortskaffes sammen med dagrenovation jf. direktivet om affald af elektrisk og elektronisk udstyr (WEEE) (2012/19/EU) og gældende national lovgivning. Det pågældende produkt skal afleveres på et nærmere specificeret indsamlingssted, f.eks. i overensstemmelse med en godkendt én-til-én-procedure, når du indkøber et nyt tilsvarende produkt, eller produktet skal afleveres på et godkendt indsamlingssted for elektronikaffald. Forkert håndtering af denne type affald kan medføre negative konsekvenser for miljøet og menneskers helbred på grund af de potentielt sundhedsskadelige stoffer, der generelt kan forefindes i elektrisk og elektronisk udstyr. Når du foretager korrekt bortskaffelse af det pågældende produkt, bidrager du til effektiv brug af naturressourcerne. Yderligere oplysninger om, hvor du kan bortskaffe dit elektronikaffald med henblik på genanvendelse, får du hos de kommunale renovationsmyndigheder. Yderligere oplysninger om returnering og genanvendelse af affald af elektrisk og elektronisk udstyr får du ved at besøge www.canon-europe.com/weee.

Μόνο για την Ευρωπαϊκή Ένωση και τον ΕΟΧ (Νορβηγία, Ισλανδία και Λιχτενστάιν)

Αυτό το σύμβολο υποδηλώνει ότι αυτό το προϊόν δεν πρέπει να απορρίπτεται μαζί με τα οικιακά απορρίμματα, σύμφωνα με την Οδηγία σχετικά με τα Απόβλητα Ηλεκτρικού και Ηλεκτρονικού Εξοπλισμού (ΑΗΗΕ) (2012/19/ΕΕ) και την εθνική σας νομοθεσία. Αυτό το προϊόν πρέπει να παραδίδεται σε καθορισμένο σημείο συλλογής, π.χ. σε μια εξουσιοδοτημένη βάση ανταλλαγής όταν αγοράζετε ένα νέο παρόμοιο προϊόν ή σε μια εξουσιοδοτημένη θέση συλλογής για την ανακύκλωση των αποβλήτων Ηλεκτρικού και Ηλεκτρονικού Εξοπλισμού (ΗΗΕ). Ο ακατάλληλος χειρισμός αυτού του τύπου αποβλήτων μπορεί να έχει αρνητικό αντίκτυπο στο περιβάλλον και την υγεία του ανθρώπου, λόγω δυνητικώς επικίνδυνων ουσιών που γενικά συνδέονται με τον ΗΗΕ. Ταυτόχρονα, η συνεργασία σας όσον αφορά τη σωστή απόρριψη αυτού του προϊόντος θα συμβάλει στην αποτελεσματική χρήση των φυσικών πόρων. Για περισσότερες πληροφορίες σχετικά με τα σημεία όπου μπορείτε να απορρίψετε τον εξοπλισμό σας για ανακύκλωση, επικοινωνήστε με το τοπικό γραφείο της πόλης σας, την υπηρεσία απορριμμάτων, το εγκεκριμένο σχήμα ΑΗΗΕ ή την υπηρεσία απόρριψης οικιακών αποβλήτων. Για περισσότερες πληροφορίες σχετικά με την επιστροφή και την ανακύκλωση των προϊόντων ΑΗΗΕ, επισκεφθείτε την τοποθεσία www.canon-europe.com/weee.

Gjelder kun den europeiske union og EØS (Norge, Island og Liechtenstein)

Dette symbolet indikerer at dette produktet ikke skal kastes sammen med husholdningsavfall, i henhold til WEEE-direktiv (2012/19/EU) og nasjonal lov. Produktet må leveres til et dertil egnet innsamlingspunkt, det vil si på en autorisert en-til-en-basis når du kjøper et nytt lignende produkt, eller til et autorisert innsamlingssted for resirkulering av avfall fra elektrisk og elektronisk utstyr (EE-utstyr). Feil håndtering av denne typen avfall kan være miljø- og helseskadelig på grunn av potensielt skadelige stoffer som ofte brukes i EE-utstyr. Samtidig bidrar din innsats for korrekt avhending av produktet til effektiv bruk av naturressurser. Du kan få mer informasjon om hvor du kan avhende utrangert utstyr til resirkulering ved å kontakte lokale myndigheter, et godkjent WEEE-program eller husholdningens renovasjonsselskap. Du finner mer informasjon om retur og resirkulering av WEEE-produkter på www.canon-europe.com/weee.

Vain Euroopan unionin sekä ETA:n (Norja, Islanti ja Liechtenstein) alueelle.

Tämä tunnus osoittaa, että sähkö- ja elektroniikkalaiteromua koskeva direktiivi (SER-direktiivi, 2012/19/EU) sekä kansallinen lainsäädäntö kieltävät tuotteen hävittämisen talousjätteen mukana. Tuote on vietävä asianmukaiseen keräyspisteeseen, esimerkiksi kodinkoneliikkeeseen uutta vastaavaa tuotetta ostettaessa tai viralliseen sähkö- ja elektroniikkalaiteromun keräyspisteeseen. Sähkö- ja elektroniikkalaiteromun virheellinen käsittely voi vahingoittaa ympäristöä ja ihmisten terveyttä, koska laitteet saattavat sisältää ympäristölle ja terveydelle haitallisia aineita. Lisäksi tuotteen asianmukainen hävittäminen säästää luonnonvaroja. Lisätietoja sähkö- ja elektroniikkalaiteromun keräyspisteistä saat kaupunkien ja kuntien tiedotuksesta, jätehuoltoviranomaisilta, sähkö- ja elektroniikkalaiteromun kierrätysjärjestelmän ylläpitäjältä ja jätehuoltoyhtiöltä. Lisätietoja sähkö- ja elektroniikkalaiteromun keräyksestä ja kierrätyksestä on osoitteessa www.canon-europe.com/weee.

Endast för Europeiska unionen och EES (Norge, Island och Liechtenstein)

Den här symbolen visar att produkten enligt WEEE-direktivet (2012/19/EU) och nationell lagstiftning inte får sorteras och slängas som hushållsavfall. Den här produkten ska lämnas in på en därför avsedd insamlingsplats, t.ex. på en återvinningsstation auktoriserad att hantera elektrisk och elektronisk utrustning (EE-utrustning) eller hos handlare som är auktoriserade att byta in varor då nya, motsvarande köps (en mot en). Olämplig hantering av avfall av den här typen kan ha en negativ inverkan på miljön och

människors hälsa på grund av de potentiellt farliga ämnen som kan återfinnas i elektrisk och elektronisk utrustning. Din medverkan till en korrekt avfallshantering av den här produkten bidrar dessutom till en effektiv användning av naturresurserna. Kontakta ditt lokala kommunkontor, berörd myndighet, företag för avfallshantering eller ta del av en godkänd WEEE-organisation om du vill ha mer information om var du kan lämna den kasserade produkten för återvinning. För mer information om inlämning och återvinning av WEEE-produkter, se www.canon-europe.com/weee.

Pouze Evropská unie a EHP (Norsko, Island a Lichtenštejnsko)

Tento symbol znamená, že podle směrnice o OEEZ (2012/19/EU) a podle vnitrostátních právních předpisů nemá být tento výrobek likvidován s odpadem z domácností. Tento výrobek má být vrácen do sběrného místa, např. v rámci autorizovaného systému odběru jednoho výrobku za jeden nově prodaný podobný výrobek nebo v autorizovaném sběrném místě pro recyklaci odpadních elektrických a elektronických zařízení (OEEZ). Nevhodné nakládání s tímto druhem odpadu by mohlo mít negativní dopad na životní prostředí a lidské zdraví, protože elektrická a elektronická zařízení zpravidla obsahují potenciálně nebezpečné látky. Vaše spolupráce na správné likvidaci tohoto výrobku současně napomůže efektivnímu využívání přírodních zdrojů. Další informace o místech sběru vašeho odpadního zařízení k recyklaci vám sdělí místní úřad vaší obce, správní orgán vykonávající dozor nad likvidací odpadu, sběrny OEEZ nebo služba pro odvoz komunálního odpadu. Další informace týkající se vracení a recyklace OEEZ naleznete na adrese www.canon-europe.com/weee.

Csak az Európai Unió és az EGT (Norvégia, Izland és Liechtenstein) országaiban

Ez a szimbólum azt jelzi, hogy a helyi törvények és a WEEE-irányelv (2012/19/EU) szerint a termék nem kezelhető háztartási hulladékként. A terméket a kijelölt nyilvános gyűjtőpontokon kell leadni, például hasonló cserekészülék vásárlásakor, illetve bármelyik, elektromos és elektronikai berendezésekből származó hulladék (WEEE) átvételére feljogosított gyűjtőponton. Az ilyen jellegű hulladékok a nem megfelelő kezelés esetén a bennük található veszélyes anyagok révén ártalmasak lehetnek a környezetre és az emberek egészségére. Továbbá, a termékből származó hulladék megfelelő kezelésével hozzájárulhat a természetes nyersanyagok hatékonyabb hasznosításához. A berendezésekből származó, újrahasznosítható hulladékok elhelyezésére vonatkozó további tudnivalókért forduljon a helyi önkormányzathoz, a közterület-fenntartó vállalathoz, a háztartási hulladék begyűjtését végző vállalathoz, illetve a hivatalos WEEE-képviselethez. További tudnivalókat a WEEE-termékek visszajuttatásáról és újrahasznosításáról a www.canon-europe.com/weee.

Tylko dla krajów Unii Europejskiej oraz EOG (Norwegia, Islandia i Liechtenstein)

Ten symbol oznacza, że zgodnie z dyrektywą WEEE dotyczącą zużytego sprzętu elektrycznego i elektronicznego (2012/19/UE) oraz przepisami lokalnymi nie należy wyrzucać tego produktu razem z odpadami gospodarstwa domowego. Produkt należy przekazać do wyznaczonego punktu gromadzenia odpadów, np. firmie, od której kupowany jest nowy, podobny produkt lub do autoryzowanego punktu gromadzenia zużytego sprzętu elektrycznego i elektronicznego w celu poddania go recyklingowi. Usuwanie tego typu odpadów w nieodpowiedni sposób może mieć negatywny wpływ na otoczenie i zdrowie innych osób ze względu na niebezpieczne substancje stosowane w takim sprzęcie. Jednocześnie pozbycie się zużytego sprzętu w zalecany sposób przyczynia się do właściwego wykorzystania zasobów naturalnych. Aby uzyskać więcej informacji na temat punktów, do których można dostarczyć sprzęt do recyklingu, prosimy skontaktować się z lokalnym urzędem miasta, zakładem utylizacji odpadów, skorzystać z instrukcji zatwierdzonej dyrektywą WEEE lub skontaktować się z przedsiębiorstwem zajmującym się wywozem odpadów domowych. Więcej informacji o zwracaniu i recyklingu zużytego sprzętu elektrycznego i elektronicznego znajduje się w witrynie www.canon-europe.com/weee.

Platí len pre štáty Európskej únie a EHP (Nórsko, Island a Lichtenštajnsko)

Tento symbol znamená, že podľa Smernice 2012/19/EÚ o odpade z elektrických a elektronických zariadení (OEEZ) a podľa platnej legislatívy Slovenskej republiky sa tento produkt nesmie likvidovať spolu s komunálnym odpadom. Produkt je potrebné odovzdať do určenej zberne, napr. prostredníctvom výmeny za kúpu nového podobného produktu, alebo na autorizované zberné miesto, ktoré spracúva odpad z elektrických a elektronických zariadení (EEZ). Nesprávna manipulácia s takýmto typom odpadu môže mať negatívny vplyv na životné prostredie a ľudské zdravie, pretože elektrické a elektronické zariadenia obsahujú potenciálne nebezpečné látky. Spoluprácou na správnej likvidácii produktu prispejete k účinnému využívaniu prírodných zdrojov. Ďalšie informácie o mieste recyklácie opotrebovaných zariadení získate od miestneho úradu, úradu životného prostredia, zo schváleného plánu OEEZ alebo od spoločnosti, ktorá zaisťuje likvidáciu komunálneho odpadu. Viac informácií nájdete aj na webovej stránke: www.canon-europe.com/weee.

Üksnes Euroopa Liit ja EMP (Norra, Island ja Liechtenstein)

See sümbol näitab, et antud toodet ei tohi vastavalt elektri- ja elektroonikaseadmete jäätmeid käsitlevale direktiivile (2012/19/EL) ning teie riigis kehtivatele õigusaktidele utiliseerida koos olmejäätmetega. Antud

toode tuleb anda selleks määratud kogumispunkti, nt müügipunkt, mis on volitatud üks ühe vastu vahetama, kui ostate uue sarnase toote, või elektri- ja elektroonikaseadmete jäätmete ümbertöötlemiseks mõeldud kogumispunkti. Täiendava teabe saamiseks elektri- ja elektroonikaseadmetest tekkinud jäätmete tagastamise ja ümbertöötlemise kohta võtke ühendust kohaliku omavalitsusega, asjakohase valitsusasutusega, asjakohase tootjavastutusorganisatsiooniga või olmejäätmete käitlejaga. Lisateavet leitate ka Interneti-leheküljelt www.canon-europe.com/weee.

Tikai Eiropas Savienībai un EEZ (Norvēģijai, Islandei un Lihtenšteinai)

Šis simbols norāda, ka atbilstoši ES Direktīvai (2012/19/ES) par elektrisko un elektronisko iekārtu atkritumiem (EEIA) un vietējiem tiesību aktiem no šī izstrādājuma nedrīkst atbrīvoties, izmetot to kopā ar sadzīves atkritumiem. Šis izstrādājums ir jānodod piemērotā savākšanas vietā, piemēram, apstiprinātā veikalā, kur iegādājaties līdzīgu jaunu produktu un atstājat veco, vai apstiprinātā vietā izlietotu elektrisko un elektronisko iekārtu pārstrādei. Nepareiza šāda veida atkritumu apsaimniekošana var apdraudēt vidi un cilvēka veselību tādu iespējami bīstamu vielu dēļ, kas parasti ir elektriskajās un elektroniskajās iekārtās. Turklāt jūsu atbalsts pareizā šāda veida atkritumu apsaimniekošanā sekmēs efektīvu dabas resursu izmantošanu. Lai saņemtu pilnīgāku informāciju par vietām, kur izlietoto iekārtu var nodot pārstrādei, sazinieties ar vietējo pašvaldību, atkritumu savākšanas atbildīgo dienestu, pilnvarotu EEIA struktūru vai sadzīves atkritumu apsaimniekošanas iestādi. Lai saņemtu plašāku informāciju par elektrisko un elektronisko iekārtu nodošanu pārstrādei, apmeklējiet tīmekļa vietni www.canon-europe.com/weee.

Tik Europos Sąjungai ir EEE (Norvegijai, Islandijai ir Lichtenšteinui)

Šis ženklas reiškia, kad gaminio negalima išmesti su buitinėmis atliekomis, kaip yra nustatyta Direktyvoje (2012/19/ES) ir nacionaliniuose teisė aktuose dėl EĮ atliekų tvarkymo. Šį gaminį reikia atiduoti į tam skirtą surinkimo punktą, pvz., pagal patvirtintą keitimo sistemą, kai perkamas panašus gaminys, arba į elektros ir elektroninės įrangos (EĮ) atliekų perdirbimo punktą. Netinkamas tokios rūšies atliekų tvarkymas dėl elektros ir elektroninėje įrangoje esančių pavojingų medžiagų gali pakenkti aplinkai ir žmonių sveikatai. Padėdami užtikrinti tinkamą šio gaminio šalinimo tvarką, kartu prisidėsite prie veiksmingo gamtos išteklių naudojimo. Jei reikia daugiau informacijos, kaip šalinti tokias atliekas, kad jos būtų toliau perdirbamos, kreipkitės į savo miesto valdžios institucijas, atliekų tvarkymo organizacijas, patvirtintų EĮ atliekų sistemų arba jūsų buitinių atliekų tvarkymo įstaigų atstovus. Išsamesnės informacijos apie EĮ atliekų grąžinimo ir perdirbimo tvarką galite rasti apsilankę tinklalapyje www.canon-europe.com/weee.

Samo za Evropsko unijo in EGP (Norveška, Islandija in Lihtenštajn)

Ta simbol pomeni, da tega izdelka v skladu z direktivo OEEO (2012/19/EU) in državno zakonodajo ne smete odvreči v gospodinjske odpadke. Ta izdelek morate odložiti na ustrezno zbiralno mesto, na primer pri pooblaščenem prodajalcu, ko kupite podoben nov izdelek ali na zbiralno mesto za recikliranje električne in elektronske opreme. Neprimerno ravnanje s takšnimi odpadki lahko negativno vpliva na okolje in človekovo zdravje zaradi nevarnih snovi, ki so povezane z električno in elektronsko opremo. S pravilno odstranitvijo izdelka hkrati prispevate tudi k učinkoviti porabi naravnih virov. Če želite več informacij o tem, kje lahko odložite odpadno opremo za recikliranje, pokličite občinski urad, komunalno podjetje ali službo, ki skrbi za odstranjevanje odpadkov, ali si oglejte načrt OEEO. Če želite več informacij o vračanju in recikliranju izdelkov v skladu z direktivo OEEO, obiščite www.canon-europe.com/weee.

Само за Европейския съюз и ЕИП (Норвегия, Исландия и Лихтенщайн)

Този символ показва, че този продукт не трябва да се изхвърля заедно с битовите отпадъци, съгласно Директивата за ИУЕЕО (2012/19/ЕС) и Вашето национално законодателство. Този продукт трябва да бъде предаден в предназначен за целта пункт за събиране, например на база размяна, когато купувате нов подобен продукт, или в одобрен събирателен пункт за рециклиране на излязло от употреба електрическо и електронно оборудване (ИУЕЕО). Неправилното третиране на този тип отпадъци може да доведе до евентуални отрицателни последствия за околната среда и човешкото здраве поради потенциално опасните вещества, които обикновено са свързани с ЕЕО. В същото време Вашето съдействие за правилното изхвърляне на този продукт ще допринесе за ефективното използване на природните ресурси. Повече информация относно местата, където може да предавате излязло от употреба оборудване за рециклиране, може да получите от местните власти, от органа, отговорен за отпадъците и от одобрена система за излязло от употреба ЕЕО или от Вашата местна служба за битови отпадъци. За повече информация относно връщането и рециклирането на продукти от излязло от употреба ЕЕО посетете www.canon-europe.com/weee.

Doar pentru Uniunea Europeană şi EEA (Norvegia, Islanda şi Liechtenstein)

Acest simbol indică faptul că acest produs nu trebuie aruncat o dată cu reziduurile menajere, în conformitate cu Directiva DEEE (Directiva privind deşeurile de echipamente electrice şi electronice) (2012/19/UE) şi legile naţionale. Acest produs trebuie transportat la un punct de colectare special, de

exemplu un centru care preia produsele vechi atunci când achiziţionaţi un produs nou similar, sau la un punct de colectare autorizat pentru reciclarea deşeurilor provenite de la echipamentele electrice şi electronice (EEE). Mânuirea necorespunzătoare a acestor tipuri de deşeuri poate avea un impact negativ asupra mediului înconjurător şi sănătăţii indivizilor, din cauza substanţelor potenţial nocive care sunt în general asociate cu EEE. În acelaşi timp, cooperarea dvs. la reciclarea corectă a acestui produs va contribui la utilizarea efectivă a resurselor naturale. Pentru mai multe informaţii privind locurile de reciclare a deşeurilor provenite de la echipamente, contactaţi biroul primăriei locale, autoritatea responsabilă cu colectarea deşeurilor, schema DEEE aprobată sau serviciul de colectare a deşeurilor menajere. Pentru mai multe informaţii privind returnarea şi reciclarea produselor DEEE, vizitaţi www.canon-europe.com/weee.

Samo za Europsku uniju i EEZ (Norveška, Island i Lihtenštajn)

Ovaj simbol pokazuje da se ovaj proizvod ne smije odlagati s kućnim otpadom sukladno WEEE Direktivi (2012/19/EC) i vašem nacionalnom zakonu. Ovaj proizvod je potrebno predati na posebno mjesto za sakupljanje otpada, npr. na ovlašteno mjesto gdje možete zamijeniti staro za novo ukoliko kupujete novi sličan proizvod ili na ovlašteno mjesto za sakupljanje rabljene električne i elektroničke opreme (EEE) za recikliranje. Nepropisno rukovanje ovom vrstom otpada može imati negativan učinak na okolinu i zdravlje ljudi zbog supstanci koje su potencijalno opasne za zdravlje, a općenito se povezuju s EEE. Istovremeno, vaša će suradnja kroz propisno odlaganje ovog proizvoda doprinijeti efektivnoj uporabi prirodnih resursa. Za više informacija o tome gdje možete odložiti svoj otpad za recikliranje obratite se vašem lokalnom gradskom uredu, komunalnoj službi, odobrenom WEEE programu ili službi za odlaganje kućnog otpada. Ostale informacije o vraćanju i recikliranju WEEE proizvoda potražite na www.canon-europe.com/weee.

Korisnici u Srbiji

Ovaj simbol označava da ovaj proizvod ne sme da se odlaže sa ostalim kućnim otpadom, u skladu sa WEEE Direktivom (2012/19/EU) i nacionalnim zakonima. Ovaj proizvod treba predati određenom centru za prikupljanje, npr. na osnovi "jedan-za-jedan" kada kupujete sličan novi proizvod, ili ovlašćenom centru za prikupljanje za reciklažu istrošene električne i elektronske opreme (EEE). Nepravilno rukovanje ovom vrstom otpada može da ima moguće negativne posledice po životnu sredinu i ljudsko zdravlje usled potencijalno opasnih materijala koji se uglavnom vezuju za EEE. U isto vreme, vaša saradnja na ispravnom odlaganju ovog proizvoda će doprineti efikasnom korišćenju prirodnih resursa. Za više informacija o tome gde možete da predate vašu staru opremu radi recikliranje, vas molimo, da kontaktirate lokalne gradske vlasti, komunalne službe, odobreni plan reciklaže ili Gradsku čistoću. Za više informacija o vraćanju i recikliranju WEEE proizvoda, posetite stranicu www.canon-europe.com/weee.

Handling Precautions

- Canceling Print Jobs
- Legal Restrictions on Scanning/Copying
- Printer Handling Precautions
- Transporting Your Printer
- When Repairing, Lending, or Disposing of the Printer
- Keeping Print Quality High

Legal Restrictions on Scanning/Copying

Scanning, printing, copying, or modifying copies of the following may be punishable under law.

This list is non-exhaustive. When in doubt, check with a local legal representative.

- Paper money
- Money orders
- Certificates of deposit
- Postage stamps (canceled or uncanceled)
- Identification badges or insignia
- Selective service or draft papers
- Checks or drafts issued by governmental agencies
- Motor vehicle licenses and certificates of title
- Traveler's checks
- Food stamps
- Passports
- Immigration papers
- Internal revenue stamps (canceled or uncanceled)
- Bonds or other certificates of indebtedness
- Stock certificates
- Copyrighted works or works of art, without the owner's consent

Printer Handling Precautions

Be careful not to let anything get inside the document output slot. It may cause damage.

Transporting Your Printer

When relocating the printer for changing your living place or repairing it, make sure of the following.

Important

- Pack the printer in a sturdy box so that it is placed with its bottom facing down, using sufficient protective material to ensure safe transport.
- With the print head and ink tank left installed in the printer, press the **ON** button to turn off the power. This allows the printer to automatically cap the print head, thus preventing it from drying.
- After packing, do not tilt the box containing the printer or turn it on its side or upside down. Doing so may cause the ink to leak during transport and cause damage to the printer.
- When a shipping agent is handling transport of the printer, have its box marked "THIS SIDE UP" to keep the printer with its bottom facing down. Mark also with "FRAGILE" or "HANDLE WITH CARE".

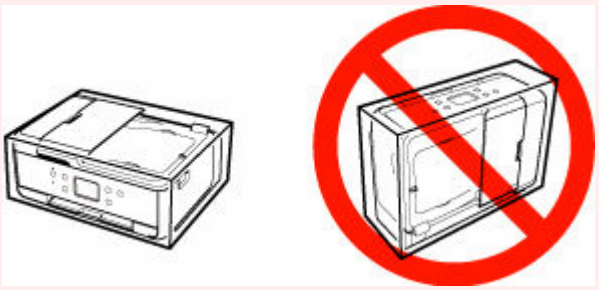

1. Turn the printer off.
2. Check that **ON** lamp is off and unplug power cord.

   Important

   - Do not unplug the printer while the **ON** lamp is lit or flashing, as it may cause malfunction or damage to the printer, making the printer unable to print.

3. Retract trays.
4. Close the operation panel.
5. Shorten cassette.
6. Unplug the printer cable from the computer and from the printer, then unplug the power cord from the printer.
7. Use adhesive tape to secure all the covers on the printer to keep them from opening during transportation. Then pack the printer in the plastic bag.
8. Attach the protective material to the printer when packing the printer in the box.

When Repairing, Lending, or Disposing of the Printer

If you have entered personal data, passwords and/or other security settings on the printer, such information may be stored in the printer.

When sending the printer for repair, lending or transferring the printer to another person, or disposing of the printer, please be sure to follow the steps below in order to delete such information and prevent third parties from accessing it.

- Select (Setup) on HOME screen and select **Printer settings** > **Reset settings** > **Reset all** > **Yes**.

For printers with fax capabilities, user information and speed dial numbers can be backed up to a computer by utilizing the Speed Dial Utility2 software before resetting the printer or deleting data. Backed up data can be restored to the repaired printer or another Canon printer.

➡ Registering Recipients Using Speed Dial Utility2 (Windows)
➡ Registering Recipients Using Speed Dial Utility2 (macOS)

Keeping Print Quality High

The key to printing with the optimal printing quality is to prevent the print head from drying or clogging. Always observe the following rules for optimal printing quality.

Note

- Depending on the type of paper, ink may blur if you trace the printed area with a highlight pen or paint-stick, or bleed if water or sweat comes in contact with the printed area.

Never unplug the power cord until the power is turned off!

If you press the **ON** button to turn off the power, the printer caps the print head (nozzles) automatically to prevent from drying. If you unplug the power cord from the wall outlet before the **ON** lamp is turned off, the print head will not be capped properly and this will cause drying or clogging.

When unplugging the power cord, check that the **ON** lamp is not lit.

Print periodically!

Just as the tip of a felt pen becomes dry and unusable if it has not been used for a long time, even if it is capped, the print head too, may become dried or clogged if the printer has not been used for a long time. We recommend you to use the printer at least once a month.

Main Components and Their Use

- Main Components
- Power Supply
- Using Touch Screen

Main Components

- Front View
- Rear View
- Inside View
- Operation Panel

Front View

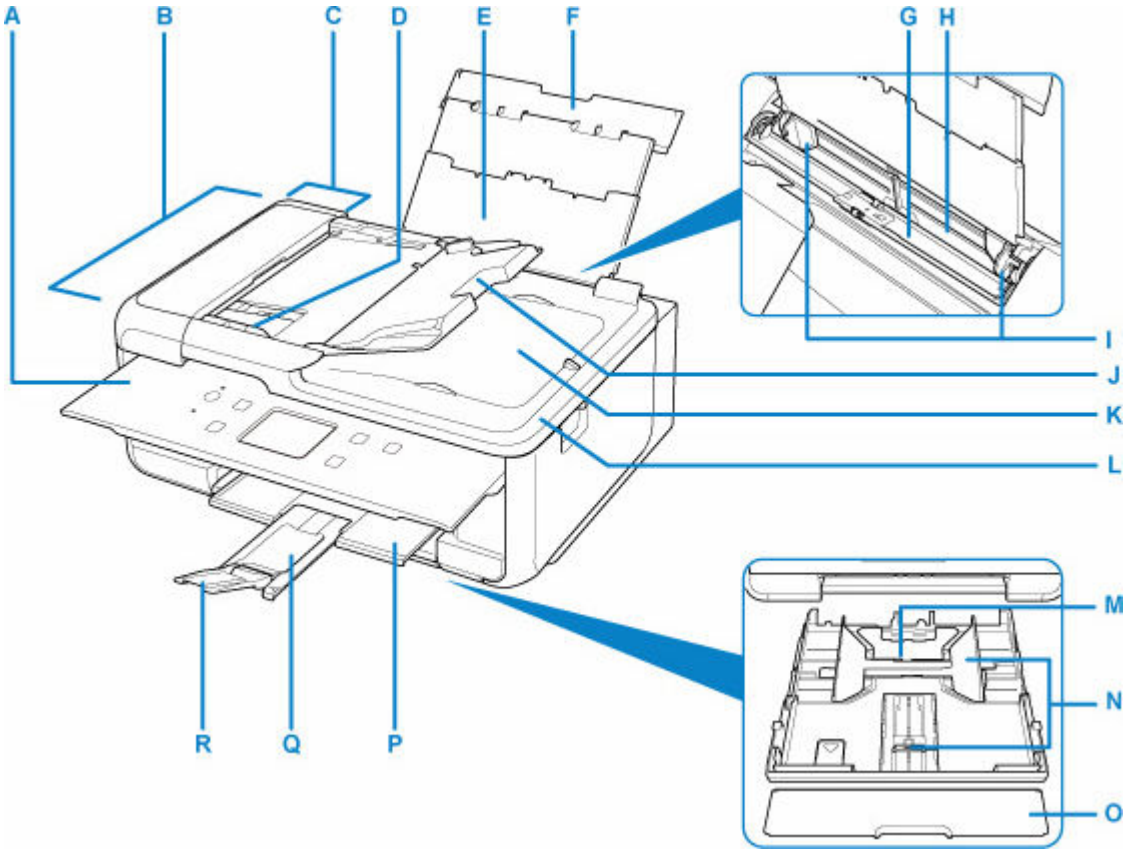

A: Operation Panel

Use to change the settings of the printer or to operate it.

➡ Operation Panel

B: ADF (Auto Document Feeder)

Load a document here. The documents loaded in the document tray are scanned automatically one sheet at a time.

➡ Loading Documents in the ADF (Auto Document Feeder)

C: Document Feeder Cover

Open when clearing jammed documents.

D: Document Guide

Adjust this guide to match the width of document in the ADF.

E: Paper Support

Extend to load paper in the rear tray.

F: Rear Tray Cover

Open to load paper in the rear tray.

G: Feed Slot Cover

Prevents anything from falling into the feed slot.

Open it to slide the paper guides, and close it before printing.

H: Rear Tray

Load paper here. Two or more sheets of the same size and type of paper can be loaded at the same time, and fed automatically one sheet at a time.

➡ Loading Plain Paper / Photo Paper in Rear Tray
➡ Loading Envelopes in Rear Tray

I: Paper Guides

Align with both sides of the paper stack.

J: Document Tray

Open to load a document in the ADF. You can load two or more sheets of document of the same size and thickness. Load the document with the side you want to scan facing up.

K: Document Output Slot

Documents scanned from the ADF are delivered here.

L: Document Cover

Open to load an original on the platen.

M: Cassette

Load A4, B5, A5, or Letter-sized plain paper into the cassette, and insert it into the printer.

➡ Loading Plain Paper in Cassette

N: Paper Guides

Align with right/left/front sides of the paper stack.

O: Cassette Cover

Detach to load paper in the cassette.

P: Paper Output Tray

Printed paper is ejected. Pull out it before printing.

Q: Paper Output Support

Extend to support ejected paper.

R: Output Tray Extension

Open to support ejected paper.

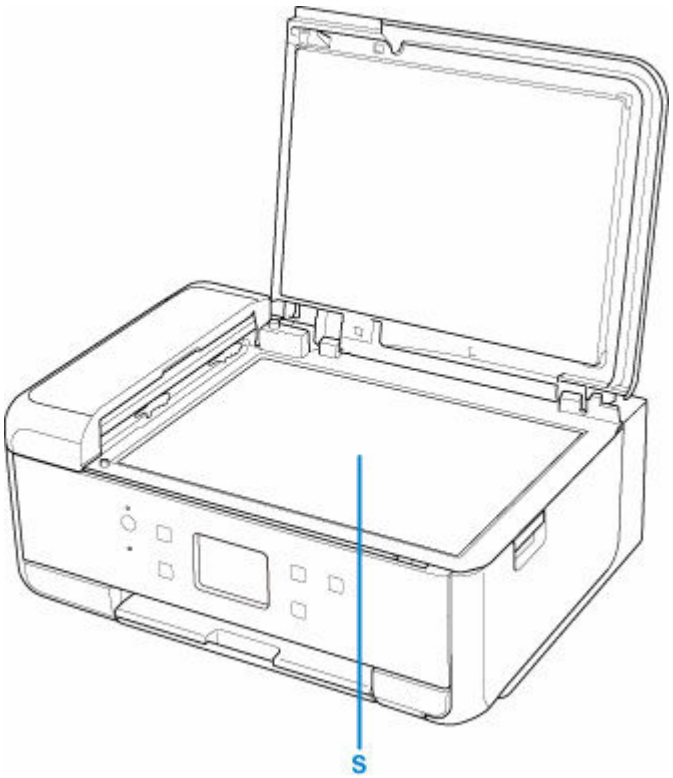

S: Platen

Load an original here.

Rear View

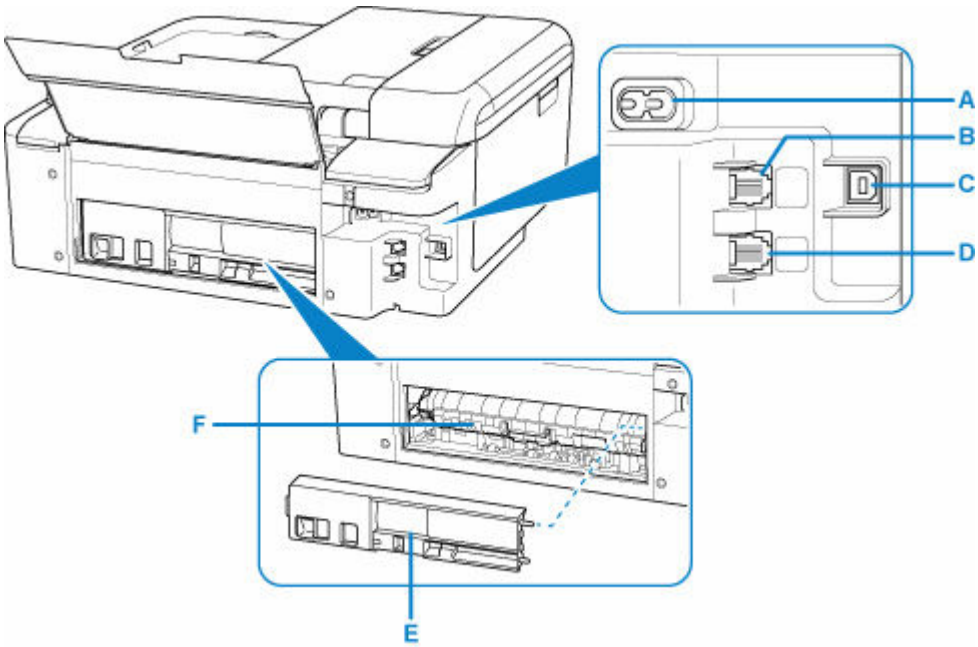

A: Power Cord Connector

Plug in the supplied power cord.

B: Telephone Line Jack

Connect the telephone line.

C: USB Port

Plug in the USB cable to connect the printer with a computer.

D: External Device Jack

Connect an external device such as telephone or answering device.

E: Rear Cover

Detach when removing jammed paper.

F: Transport Unit Cover

Open when removing jammed paper.

Important

- Do not touch the metal casing.
- Do not plug in or unplug the USB cable while the printer is printing or scanning with the computer. This can cause trouble.

Inside View

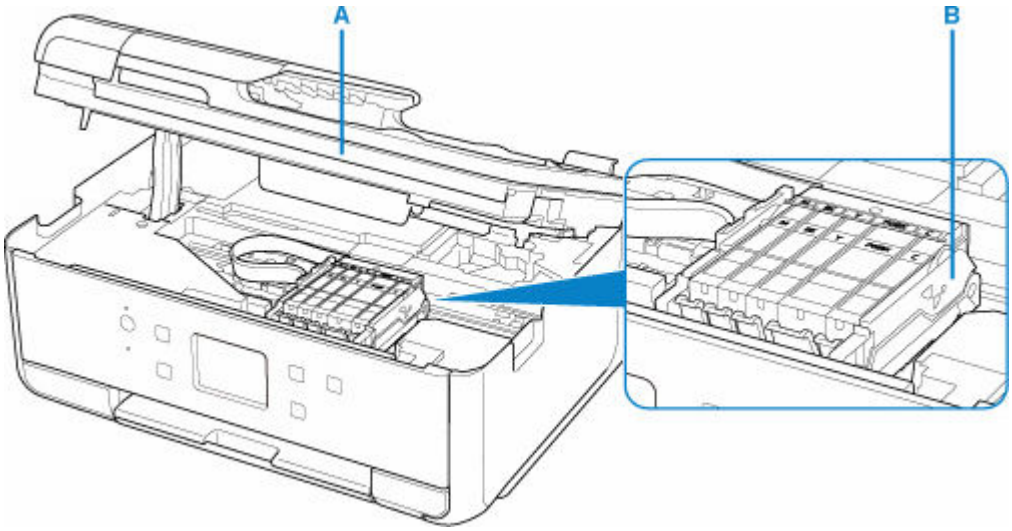

A: Scanning Unit / Cover

Scans originals. Also, lift and open it to replace an ink tank or to remove jammed paper inside the printer.

B: Print Head Holder

The print head is pre-installed.

Note

- For details on replacing an ink tank, see Replacing Ink Tanks.

Operation Panel

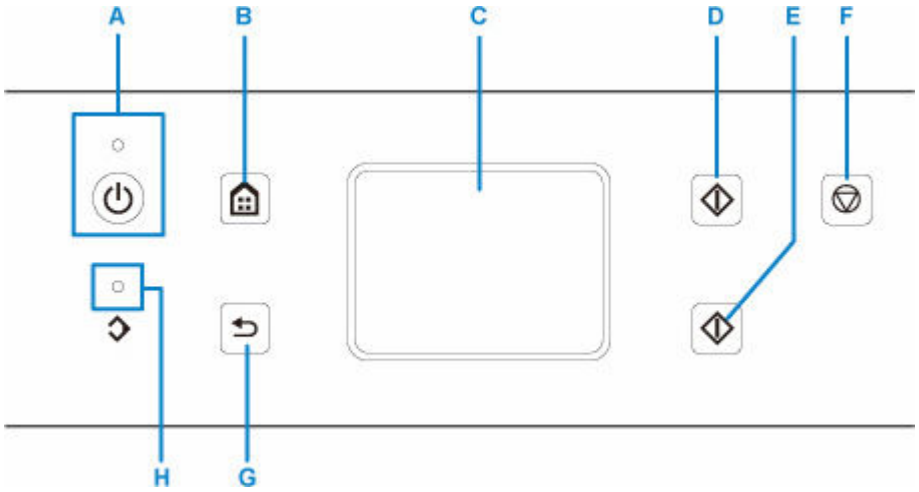

A: ON button/ON lamp

Turns the power on or off. Lights after flashing when the power is turned on. Before turning on the power, make sure that the document cover is closed.

B: HOME button

Used to display the HOME screen.

➡ Using Touch Screen

C: Touch Screen

Displays messages, menu items, and the operational status. Directly touch the screen lightly with your finger tip to select a menu item or displayed button.

➡ Basic Operation of the touch screen

D: Black button

Starts black & white copying, scanning and sending fax.

E: Color button

Starts color copying, scanning and sending fax.

F: Stop button

Cancels operation when print, copy, scan job, or fax transmission/reception is in progress.

G: Back button

Returns the touch screen to the previous screen.

H: FAX Memory lamp

When lit, indicates that there are received or unsent documents in the printer's memory.

Power Supply

- Checking that Power Is On
- Turning the Printer On and Off
- Checking the Power Plug/Power Cord
- Unplugging the Printer

Checking that Power Is On

The **ON** lamp is lit when the printer is turned on.

Even if the touch screen is off, if the **ON** lamp is lit, the printer is on.

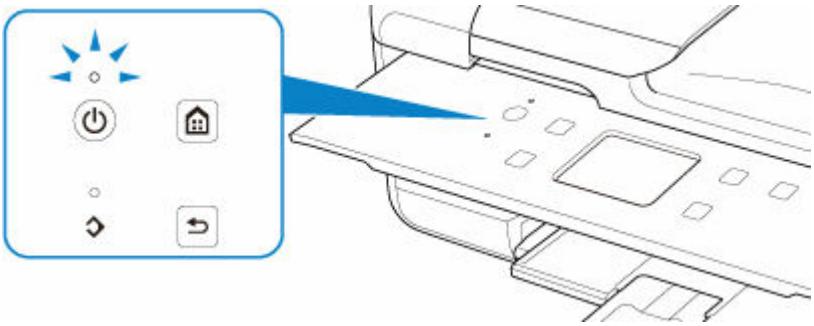

Note

- It may take a while for the printer to start printing immediately after you turn on the printer.
- The touch screen display will turn off if the printer is not operated for about 10 minutes. To restore the display, touch the touch screen. The print operation from a computer can also restore the display.

Turning the Printer On and Off

Turning on the printer

Press the ON button to turn on the printer.

The **ON** lamp flashes and then remains lit.

➡ Checking that Power Is On

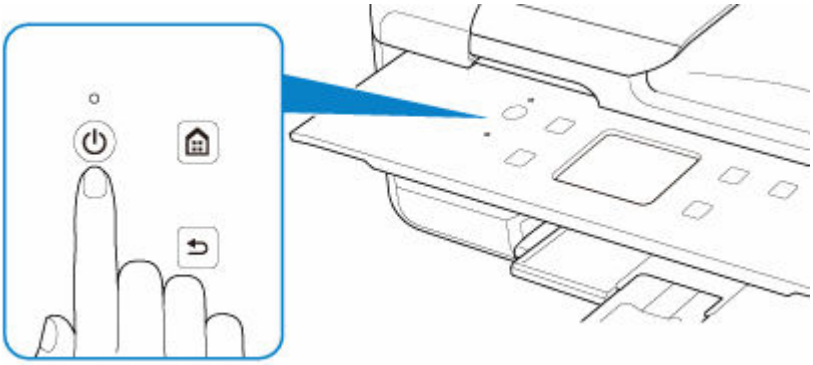

Note

- It may take a while for the printer to start printing immediately after you turn on the printer.
- If an error message is displayed on the touch screen, see When Error Occurred.
- You can set the printer to automatically turn on when a print or scan operation is performed from a computer connected by USB cable or wireless network. This feature is set to off by default.

  From the printer

  ➡ ECO settings

  From the computer

  – For Windows:

    ➡ Managing the Printer Power

  – For macOS:

    ➡ Managing the Printer Power

Turning off the printer

Press the ON button to turn off the printer.

When the **ON** lamp stops flashing, the printer is turned off.

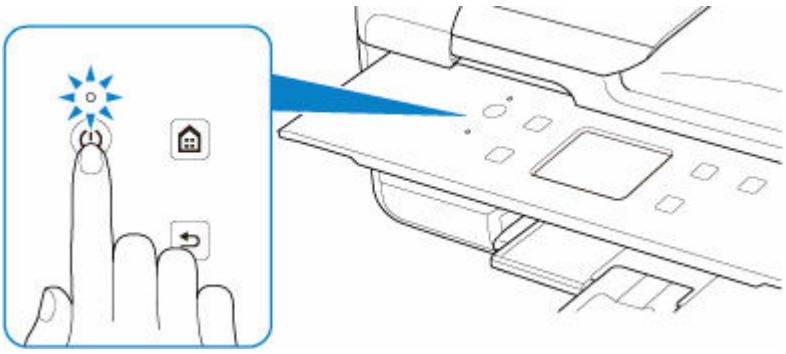

Important

- When you unplug the power cord after turning off the printer, be sure to confirm that the **ON** lamp is off.

Note

- You can set the printer to automatically turn off when no operations are performed or no print jobs are sent to the printer for a certain interval. This feature is set to on by default.

  From the printer

  ➡ ECO settings

  From the computer

  – For Windows:

    ➡ Managing the Printer Power

  – For macOS:

    ➡ Managing the Printer Power

Checking the Power Plug/Power Cord

Unplug the power cord once a month to confirm that the power plug/power cord does not have anything unusual described below.

- The power plug/power cord is hot.
- The power plug/power cord is rusty.
- The power plug/power cord is bent.
- The power plug/power cord is worn.
- The power plug/power cord is split.

⚠ Caution

- If you find anything unusual with the power plug/power cord described above, unplug the power cord and call for service. Using the printer with one of the unusual conditions above may cause a fire or an electric shock.

Unplugging the Printer

To unplug the power cord, follow the procedure below.

Important

- When you unplug the power cord, press the **ON** button, then confirm that the **ON** lamp is off. Unplugging the power cord while the **ON** lamp is lit or flashing may cause drying or clogging of the print head and print quality may be reduced.
- Unplugging the printer will reset the date/time setting and erase all documents in the printer's memory. Send faxes or print documents as needed before unplugging the printer.

1. Press the **ON** button to turn the printer off.

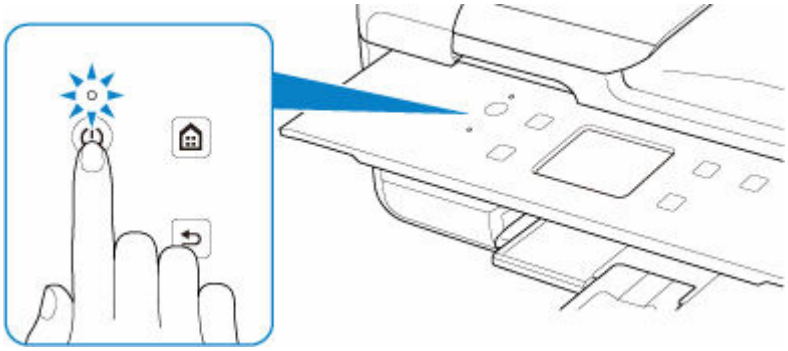

2. Confirm that the **ON** lamp is off.

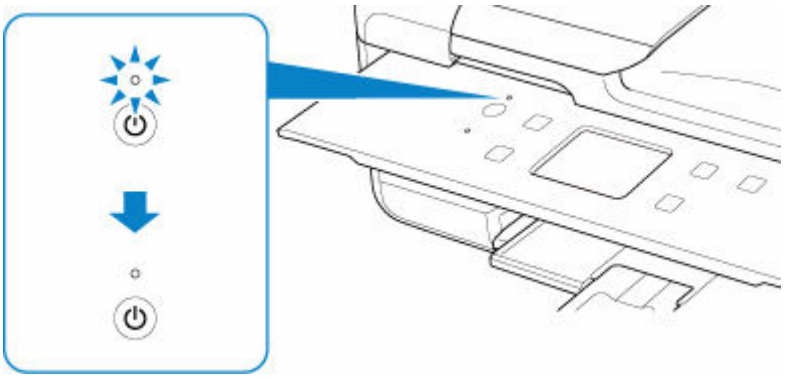

3. Unplug the power cord.

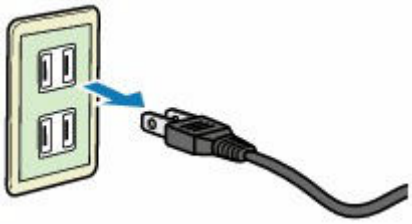

The specification of the power cord differs depending on the country or region of use.

Using Touch Screen

The HOME screen on the touch screen appears when the printer is turned on.

Touch the HOME screen on the touch screen with your finger tip to select menus for copying, scanning, and other functions.

➡ HOME Screen
➡ Basic Operation of the touch screen

HOME Screen

A: Basic menu

Select to copy or scan using the operation panel. After selecting a basic menu, the particular menus are displayed.

B: Network

Displays the current network status. Select to display the basic network information or to change the network settings.

The icon differs depending on the network of use or the network status.

Wi-Fi is enabled and the printer is connected to the wireless router.

Note

- Depending on the signal state, the icon will change.

  (Signal strength: 81 % or more): You can use the printer over Wi-Fi without any problems.

  (Signal strength: 51 % or more): The problem such as the printer cannot print may occur according to the network status. We recommend placing the printer near the wireless router.

  (Signal strength: 50 % or less): The problem such as the printer cannot print may occur. Place the printer near the wireless router.

Wi-Fi is enabled but the printer is not connected to the wireless router.

Wireless Direct is enabled.

Wi-Fi and Wireless Direct are disabled.

C: Wireless connect

Select to connect the printer to a smartphone/tablet over Wi-Fi through Easy wireless connect.

Tap this button to display a confirmation screen for starting a connection. Touch and hold this button to switch to the standby mode for Easy wireless connect.

➡ Easy wireless connect

D: Setup

Displays the printer's setting menus or the maintenance menus.

(NEW) appears when there is an update notification or information from PIXMA/MAXIFY Cloud Link.

➡ Firmware update
➡ Using PIXMA/MAXIFY Cloud Link

E: Hint

Displays quick guides about such procedures as loading paper and troubleshooting and such information as estimated ink level and system information.

Note

- For details on how to change settings, refer to Changing Settings from Operation Panel.

Basic Operation of the touch screen

Touch the touch screen lightly with your finger tip or move your finger to access various functions or settings.

Important

- When operating the touch screen, make sure to avoid the followings, which may cause the printer to malfunction or damage the printer.
  - Strongly pressing the touch screen.
  - Pressing the touch screen with other than your finger (especially with sharpened tips, such as on ballpoint pens, pencils, or nails).
  - Touching the touch screen with wet or dirty hands.
  - Placing any objects on the touch screen.
- Do not attach a protective sheet on the touch screen. Removing it may damage the touch screen.

Tap

Touch lightly with your finger tip and immediately release.

Use to select an item or photo on the screen.

Touch

Touch lightly with your finger tip.

To move forward (or go back) menus or photos continuously, keep touching the forward (or back) mark.

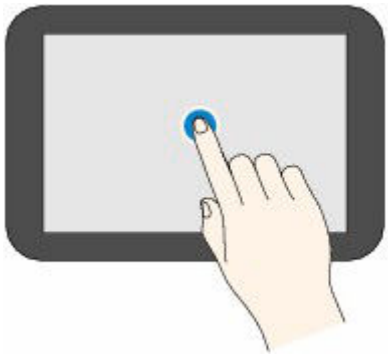

Flick

Flick your finger on the screen up, down, left, or right.

Use to switch menus or move forward or backward through photos.

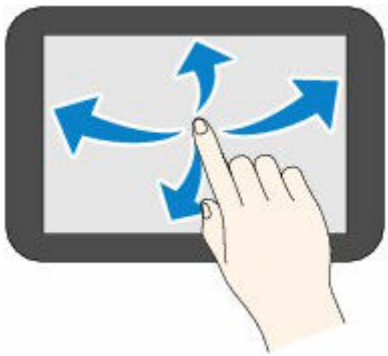

Drag

While lightly touching the screen, move your finger up, down, left, or right.

Use to view lists of items or move sliders.

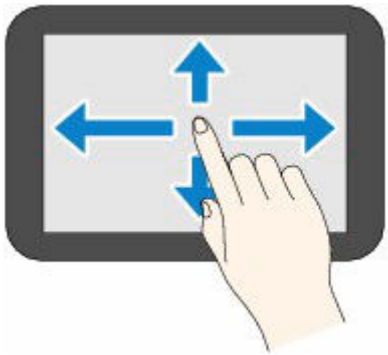

Changing Settings

- Changing Printer Settings from Your Computer (Windows)
- Changing Printer Settings from Your Computer (macOS)
- Changing Settings from Operation Panel

Changing Printer Settings from Your Computer (Windows)

- Changing the Print Options
- Registering a Frequently Used Printing Profile
- Setting the Ink to be Used
- Managing the Printer Power
- Changing the Printer Operation Mode

Changing the Print Options

You can change the detailed printer driver settings for print data that is sent from an application software.

Check this check box if part of the image data is cut off, the paper source during printing differs from the driver settings, or printing fails.

1. Open the printer driver setup window

2. Click **Print Options...** on the **Page Setup** tab

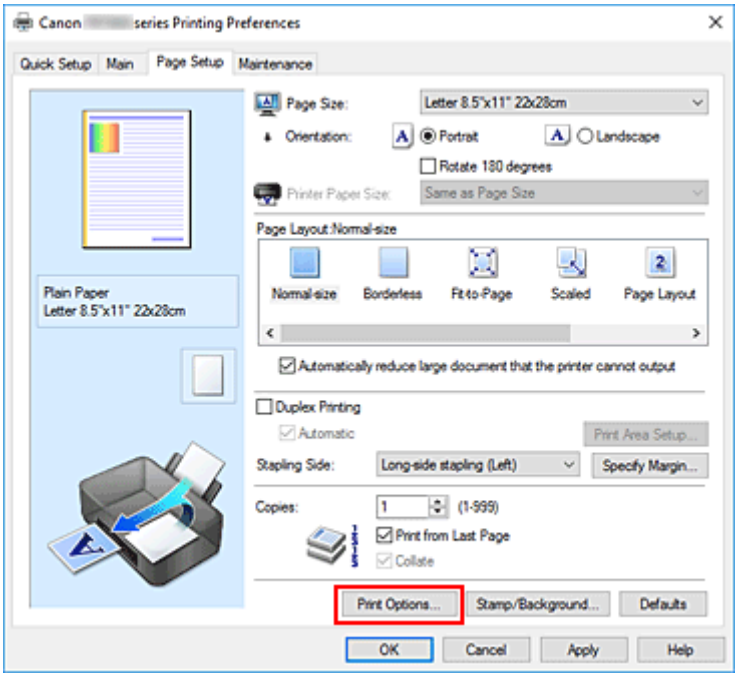

The **Print Options** dialog box opens.

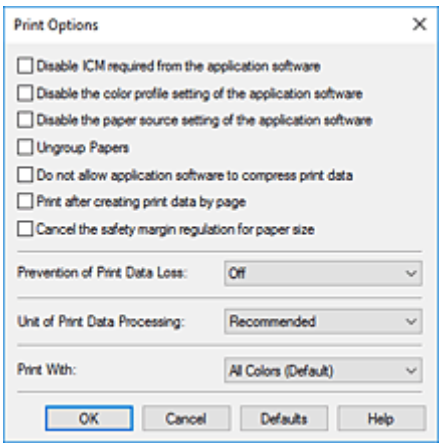

3. Change the individual settings

   If necessary, change the setting of each item, and then click **OK**.

   The **Page Setup** tab is displayed again.

Registering a Frequently Used Printing Profile

You can register the frequently used printing profile to **Commonly Used Settings** on the **Quick Setup** tab. Unnecessary printing profiles can be deleted at any time.

Registering a Printing Profile

1. Open the printer driver setup window

2. Set the necessary items

   From **Commonly Used Settings** on the **Quick Setup** tab, select the printing profile to be used and if necessary, change the settings after **Additional Features**.
   You can also register necessary items on the **Main** and **Page Setup** tabs.

3. Click **Save...**

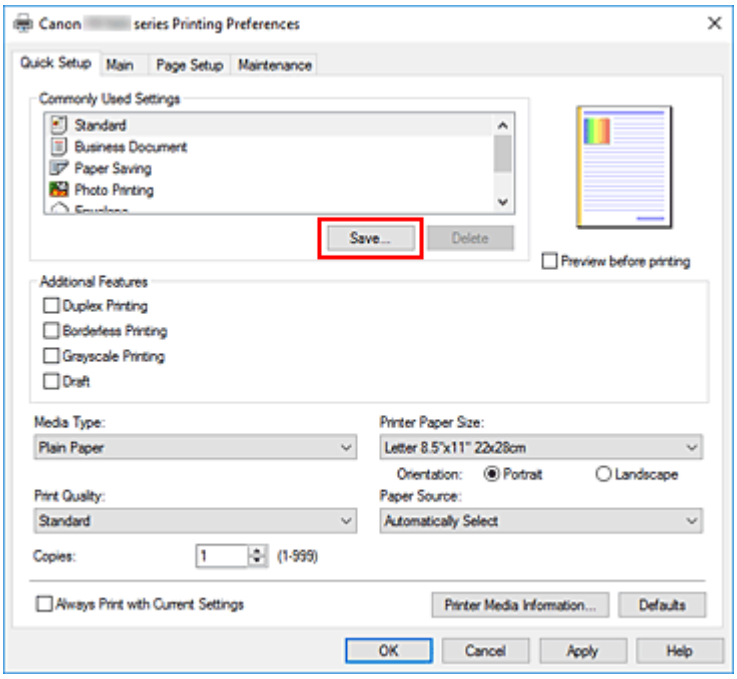

   The **Save Commonly Used Settings** dialog box opens.

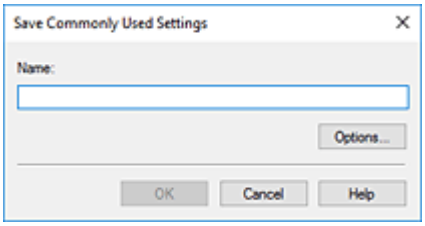

4. Save the settings

   Enter a name for the print settings to register in the **Name** field. If necessary, click **Options...**, set the items, and then click **OK**.
   In the **Save Commonly Used Settings** dialog box, click **OK** to save the print settings and return to the

Quick Setup tab.
The name and icon are displayed in **Commonly Used Settings**.

Important

- To save the page size, orientation, and number of copies that was set in each sheet, click **Options...**, and check each item.

Note

- When you re-install the printer driver or upgrade the printer driver version, the print settings that are already registered will be deleted from **Commonly Used Settings**.
  Registered print settings cannot be saved and preserved. If a profile is deleted, register the print settings again.

Deleting Unnecessary Printing Profile

1. Select the printing profile to be deleted

   Select the printing profile you want to delete from the **Commonly Used Settings** list on the **Quick Setup** tab.

2. Delete the printing profile

   Click **Delete**. When the confirmation message appears, click **OK**.
   The selected printing profile is deleted from the **Commonly Used Settings** list.

Note

- Printing profiles that are registered in the initial settings cannot be deleted.

Setting the Ink to be Used

This feature enables you to specify the most appropriate ink tank among installed ink tanks according to an intended use.

1. Open the printer driver setup window

2. Click **Print Options...** on the **Page Setup** tab

   The **Print Options** dialog box appears.

3. Select the ink tank to be used from **Print With**

   Select the ink tank to be used for printing and click **OK**.

4. Click **OK** on the **Page Setup** tab

   When you perform printing, the specified ink tank will be used.

Important

- When the following settings are specified, **Only PGBK (Black)** does not function because the printer uses an ink tank other than PGBK (Black) to print documents.
  - Other than **Plain Paper**, **Envelope**, **Ink Jet Hagaki (A)**, **Hagaki K (A)**, **Hagaki (A)**, or **Hagaki** is selected for **Media Type** on the **Main** tab
  - **Borderless** is selected from the **Page Layout** list on the **Page Setup** tab
- Do not detach the ink tank that is not in use. Printing cannot be performed while either ink tank is detached.

Managing the Printer Power

This function allows you to manage the printer power from the Canon IJ Printer Assistant Tool.

Power Off

The **Power Off** function turns off the printer. When you use this function, you will not be able to turn the printer on from the Canon IJ Printer Assistant Tool.

1. Open Canon IJ Printer Assistant Tool

2. Perform power off

   Click **Power Off**. When the confirmation message appears, click **OK**.

   The printer power switches off.

   Important

   - You cannot receive faxes when the printer is switched off.

Auto Power

Auto Power allows you to set **Auto Power On** and **Auto Power Off**.
The **Auto Power On** function automatically turns on the printer when data is received.
The **Auto Power Off** function automatically turns off the printer when there are no operations from the printer driver or the printer for a specified period of time.

1. Open the Canon IJ Printer Assistant Tool

2. Check that the printer is on and then click **Auto Power**

   The **Auto Power Settings** dialog box will open.

   Note

   - If the printer is off or if communication between the printer and the computer is disabled, an error message may appear because the computer cannot collect the printer status.
     If this happens, click **OK** to display the most recent settings specified on your computer.

3. If necessary, complete the following settings:

   Auto Power On

   Select the auto-power on setting.
   Select **Disable** to prevent the auto-power on feature from functioning.
   Check that the printer is on, and then click **OK** to change the printer settings.
   Select **Enable** to turn the printer on automatically when print data is sent to it.

Auto Power Off

Specify the time from the list. When this time lapses without any operations from the printer driver or the printer, the printer is turned off automatically.

4. Apply the settings

Click **OK**. When the confirmation message appears, click **OK**.

The setting is enabled after this. When you want to disable this function, select **Disable** from the list according to the same procedure.

Note

- When the printer is turned off, the Canon IJ Status Monitor message varies depending on the **Auto Power On** setting.
  When the setting is **Enable**, "Printer is standing by" is displayed. When the setting is **Disable**, "Printer is offline" is displayed.

Important

- When you use the printer by connecting it to a telephone line via a modular cable, you can set **Auto Power Off** but the power will not be turned off automatically.

Changing the Printer Operation Mode

If necessary, switch between various modes of printer operation.

Custom Settings

1. Open the Canon IJ Printer Assistant Tool

2. Check that the printer is on and then click **Custom Settings**

   The **Custom Settings** dialog box opens.

   Note

   - If the printer is off or if communication between the printer and the computer is disabled, an error message may appear because the computer cannot collect the printer status.
     If this happens, click **OK** to display the most recent settings specified on your computer.

3. If necessary, complete the following settings:

   Prevents paper abrasion

   The printer can increase the gap between the print head and the paper during high-density printing to prevents paper abrasion.
   Check this check box to prevent paper abrasion.

   Align heads manually

   Usually, the **Print Head Alignment** function in the Canon IJ Printer Assistant Tool is set to automatic head alignment, but you can change it to manual head alignment.
   If the printing results of automatic Print Head Alignment are not satisfactory, perform manual head alignment.
   Check this check box to perform the manual head alignment. Uncheck this check box to perform the automatic head alignment.

   Rotate 90 degrees left when orientation is [Landscape]

   On the **Page Setup** tab, you can change the rotation direction of the **Landscape** in the **Orientation**.
   To rotate the print data 90 degrees to the left during printing, select this item. To rotate the print data 90 degrees to the right during printing, clear this item.

   Important

   - Do not change this setting while the print job is displayed in the print wait list. Otherwise, characters may be omitted or the layout may become corrupt.

   Note

   - If **Envelope Com 10**, **Envelope DL**, **Yougata 4 4.13"x9.25"**, or **Yougata 6 3.86"x7.48"** is selected for **Page Size** on the **Page Setup** tab, the printer rotates the paper 90 degrees to the left to print, regardless of the **Rotate 90 degrees left when orientation is [Landscape]** setting.

Do not detect mismatched paper settings when printing from a computer

When you print documents from your computer, the paper settings in the printer driver and the paper information registered on the printer do not match, this setting disables the message display and allows you to continue printing.
To disable detection of paper setting mismatches, select this check box.

Ink Drying Wait Time

You can set the length of the printer rest time until printing of the next page begins. Moving the slider to the right increases the pause time, and moving the slider to the left decreases the time. If the paper gets stained because the next page is ejected before the ink on the printed page dries, increase the ink drying wait time.
Reducing the ink drying wait time speeds up printing.

4. Apply the settings

Click **OK** and when the confirmation message appears, click **OK**.

The printer operates with the modified settings hereafter.

Changing Printer Settings from Your Computer (macOS)

- Managing the Printer Power
- Changing the Printer Operation Mode

Managing the Printer Power

Printer power supply is operated from Remote UI.

Energy saving settings

Energy saving settings allow you to set Auto power off and Auto power on.

Auto power off is the function wherein the printer automatically turns itself off, when data is not sent or the printer remains inactive for a certain period.
The Auto power on function automatically turns on the printer when data is received.

1. Selecting **Printer settings** from Remote UI

2. Click **Energy saving settings**

3. Complete the following settings:

   Auto power off
   Specify the time from the list. Printer automatically turns itself off, when data is not sent within the specified time or the printer has remained inactive.

   Auto power on
   When you check this check box, the printer automatically turns itself on when data is sent.

4. Apply the settings

   Click **OK**.
   The printer will operate with the changed settings hereafter.

Changing the Printer Operation Mode

If necessary, switch between various modes of printer operation.

1. Check whether the printer is on and select **Printer settings** from Remote UI

2. If necessary, complete the following settings:

   Print settings - Prevent paper abrasion

   The printer can increase the gap between the print head and the paper during high-density printing to prevent paper abrasion.
   Check this check box to prevent paper abrasion.

   Custom settings - Detect paper setting mismatch

   If the check box is deselected, at the time of printing from PC, you can continue to print without the message display even if the paper settings set in the Print dialog differs from the paper information registered to the printer.

   Ink drying wait time

   You can set the length of the printer rest time until printing of the next page begins. The wait time becomes longer as the value set in the list increases, and shorter as the value decreases.
   If the paper gets stained because the next page is ejected before the ink on the printed page dries, increase the ink drying wait time.
   Reducing the ink drying wait time speeds up printing.

3. Apply the settings

   Click **OK**.

   The printer operates with the modified settings hereafter.

Changing Settings from Operation Panel

- Changing Settings from Operation Panel
- Setting Items on Operation Panel
- FAX settings
- Print settings
- LAN settings
- PictBridge settings
- Smartphone photo print settings
- Other printer settings
- Language selection
- Firmware update
- Reset setting
- Feed settings
- Web service setup
- ECO settings
- Quiet setting
- System information

Changing Settings from Operation Panel

This section describes the procedure to change the settings in the **Device settings** screen, taking the steps to specify **Amount of extension** as an example.

1. Check that printer is turned on.

2. Select (Setup) on the HOME screen.

   ➡ Using Touch Screen

3. Select **Device settings**.

   The **Device settings** screen is displayed.

4. Select a setting item to adjust.

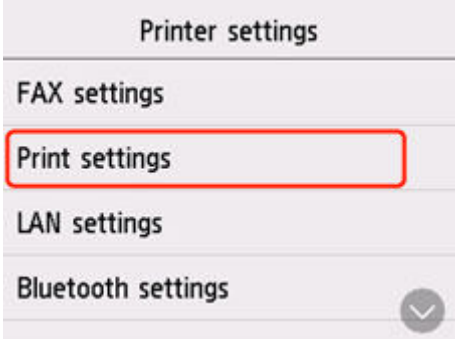

   The setting screen for the selected item is displayed.

5. Select a setting item.

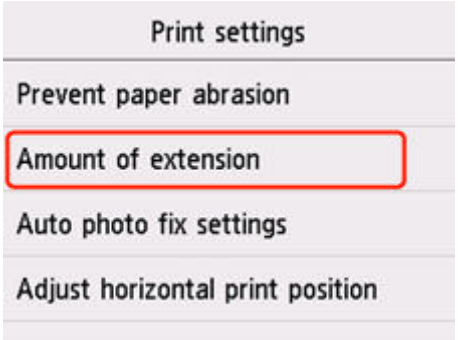

6. Select a setting to specify.

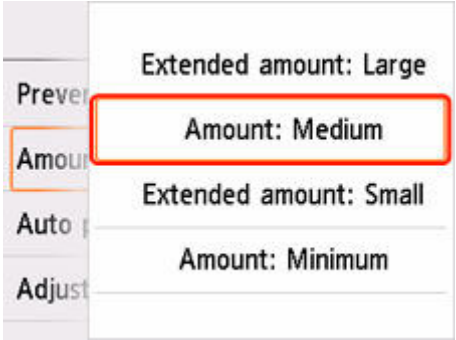

For more on setting items on the operation panel:

➡ Setting Items on Operation Panel

Setting Items on Operation Panel

Items for Printer

- FAX settings
- Other printer settings
- Language selection
- Web service setup
- ECO settings
- Quiet setting

Items for Paper/Printing

- Print settings
- PictBridge settings
- Smartphone photo print settings
- Feed settings

Items for Maintenance/Management

- LAN settings
- Firmware update
- Reset setting
- System information

FAX settings

- FAX user settings
- Advanced FAX settings
- Auto print settings
- Security control
- Easy setup

Note

- Before changing the settings, you can confirm the current settings by printing USER'S DATA LIST.
  - Summary of Reports and Lists

FAX user settings

- **User information settings**

  Registers your name and fax/telephone number printed on sent faxes.

  - Registering User Information

- **Telephone line type (Country or region of purchase other than China)**

  Selects the telephone line type setting for the printer.

  - Setting Telephone Line Type

  Note

  - This setting may not be available depending on the country or region of purchase.

- **Telephone line auto selection (China only)**

  If you select **ON**, the telephone line type is selected automatically.

  If you select **OFF**, you can select the telephone line type manually.

  - Setting Telephone Line Type

Advanced FAX settings

- **Error reduction setting (VoIP)**

  If you select **Reduce**, it may be possible to reduce the incidence of communication errors when connecting to internet line such as IP phone.

  Note

  - When **Reduce** is selected, V.34 (Super G3) can not be used. Communication time generally becomes longer than when communicating with V.34 (super G3).
  - This setting has priority even if you select **33600 bps** for **TX start speed** or **RX start speed**.

- **Auto redial**

  Enables/disables automatic redialing.

If you select **ON**, you can specify the maximum number of redial attempts and the length of time the printer waits between redial attempts.

- **Dial tone detect**

  Avoids mistransmission when reception and transmission occur at the same time.

  If you select **ON**, the printer transmits the fax after confirming the dial tone.

  Note

  - This setting may not be available depending on the country or region of purchase.

- **Pause time settings**

  Sets the length of pause time for each when you enter "P" (pause).

- **TTI position**

  Selects the position of the sender information (outside or inside the image area).

- **Remote RX**

  Enables/disables remote reception.

  If you select **ON**, you can specify the remote reception ID.

  ➡ Remote Reception

- **Color transmission**

  When faxing color documents using the ADF, selects whether to convert them into black & white data if the recipient's fax device does not support color faxing.

  If you select **Disconnect**, the printer does not send color documents when the recipient's fax device does not support color faxing.

- **RX image reduction**

  Enables/disables automatic reduction of incoming faxes so that they fit in the selected paper.

  If you select **ON**, you can select the image reduction direction.

- **Adv. communication settings**

  - **ECM TX**

    Selects whether to send faxes in Error Correction Mode (ECM).

    ➡ Transmission/Reception of Faxes Using ECM

  - **ECM RX**

    Selects whether to receive faxes in Error Correction Mode (ECM).

    ➡ Transmission/Reception of Faxes Using ECM

  - **TX start speed**

    Selects the fax transmission speed.

    The fax transmission start speed will be faster as the value is bigger.

    When the telephone line condition or connection is poor, selecting a lower transmission start speed may solve transmission problems.

- **RX start speed**

  Selects the fax reception speed.

  The fax reception start speed will be faster as the value is bigger.

  When the telephone line condition or connection is poor, selecting a lower reception start speed may solve reception problems.

Auto print settings

- **Received documents**

  Selects whether to print the received fax automatically when receiving a fax.

  If you select **Do not print**, the received fax is stored in the printer's memory.

  For details on the received fax stored in the printer's memory:

  ➡ Document Stored in Printer's Memory

- **Activity report**

  Selects whether to print ACTIVITY REPORT automatically.

  If you select **Print**, the printer prints ACTIVITY REPORT for the 20 histories of sent and received faxes automatically.

  For details on the procedure to print ACTIVITY REPORT manually:

  ➡ Summary of Reports and Lists

- **TX report**

  Selects whether to print TX REPORT/ERROR TX REPORT automatically after sending a fax.

  If you print the report, select **Print error only** or **Print for each TX**.

  If you select **Print error only** or **Print for each TX**, you can specify the print setting that the first page of the fax is printed along with the report.

- **RX report**

  Selects whether to print RX REPORT automatically after receiving a fax.

  If you print RX REPORT, select **Print error only** or **Print for each RX**.

- **Print when out of ink**

  Sets whether to continue printing the received fax without storing it in the printer's memory when the ink has run out.

  However, part or all of the fax may not be printed since the ink has run out.

Security control

- **FAX number re-entry**

  If you select **ON**, you can set the printer to send faxes after entering the number twice. By using this setting, you can avoid the mistransmission of faxes.

➡ Preventing Mistransmission of Faxes

- **Check RX FAX information**

  If you select **ON**, the printer checks whether the recipient's fax device information matches the dialed number. If it matches the number, the printer starts to send faxes.

  ➡ Preventing Mistransmission of Faxes

- **Hook key setting**

  If you select **Enable**, you can use the on hook dial function.

- **FAX reception reject**

  If you select **ON**, the printer rejects the reception of faxes with no sender information or faxes from specific senders.

  ➡ Rejecting Fax Reception

- **Caller rejection**

  If you subscribe to the Caller ID service, the printer detects the sender's Caller ID. If the sender's ID matches the condition specified in this setting, the printer rejects the phone call or fax reception from the sender.

  If you select **Yes** on the subscribing confirmation screen, you can specify the settings of rejection.

  ➡ Using Caller ID Service to Reject Calls

  Note

  - This setting may not be supported depending on the country or region of purchase. Contact your telephone company to confirm whether it provides this service.

Easy setup

The printer must be set up depending on your telephone line and use of the faxing function. Follow the procedure according to the instructions on the touch screen.

Note

- You can specify the setup setting individually or the advanced setting.

  For details on how to specify the setting:

  ➡ Preparing for Faxing

Print settings

- **Prevent paper abrasion**

  Use this setting only if the print surface becomes smudged.

  Important

  - Be sure to set this back to **OFF** after printing since it may result in lower printing speed or lower print quality.

- **Amount of extension**

  Selects the amount of image that extends off the paper when printing in borderless (full).

  When performing Borderless Printing, slight cropping may occur at the edges since the printed image is enlarged to fill the whole page. You can change the width to be cropped from the borders of the original image as needed.

  Important

  - Settings will become ineffective in the following situations:
    - Printing from a PictBridge (Wi-Fi) supporting device.
    - Printing from a standard form.

  Note

  - When performing settings from application software or the printer driver, these settings will be prioritized.
  - If printouts contain margins even though you are printing in Borderless, specifying **Extended amount: Large** for this setting may help solve the problem.

- **Auto photo fix settings**

  When **ON** is selected, you can select whether to print photos using the Exif information recorded in the image files when **Default*** or **On** is selected in printing with a PictBridge (Wireless LAN) compliant device.

  * When **Default** is selected for the print setting on the PictBridge (Wi-Fi) compliant device, select **Auto photo fix** for **Photo fix** in **PictBridge settings**.

- **Adjust horizontal print position**

  Adjusts the print position when the left/right margins are not aligned.

  You can adjust the left/right margins in increments of 0.004 in. (0.1 mm) between -0.12 in. (-3 mm) and +0.12 in. (+3 mm) centered on the horizontal center of the paper.

  Important

  - For Letter-sized or Legal-sized paper, you can adjust the left/right margins between -0.06 in. (-1.5 mm) and +0.06 in. (+1.5 mm) even if you specify the value over 0.06 in. (1.5 mm).

LAN settings

➡ Wi-Fi
➡ Wireless Direct

To print the network settings, select **Print details** and select **Yes**.

➡ Printing Network Settings

Important

- The network settings printout contains important information about your network. Handle it with care.

Wi-Fi

- **Wi-Fi setting list**

  The network settings information of the printer appears when it is connected by Wi-Fi. (Some setting items are not displayed depending on the printer settings.)

Items	Setting
Connection	Enabled (connected)/Enabled (disconnected)/Disable
Network name (SSID)	XXXXXXXXXXXXXXXX XXXXXXXXXXXXXXXX (up to 32 characters)
Wi-Fi security	Inactive/WEP(64bit)/WEP(128bit)/WPA-PSK(TKIP)/WPA-PSK(AES)/ WPA2-PSK(TKIP)/WPA2-PSK(AES)
Signal strength (%)	XXX
IPv4 address	XXX. XXX. XXX. XXX (12 characters)
IPv4 subnet mask	XXX. XXX. XXX. XXX (12 characters)
IPv4 default gateway	XXX. XXX. XXX. XXX (12 characters)
IPv6 link-local address	XXXX: XXXX: XXXX: XXXX: XXXX: XXXX: XXXX: XXXX (32 characters)
MAC address (Wi-Fi)	XXX. XXX. XXX. XXX (12 characters)
Printer name	XXXXXXXXXXXXXXX (up to 15 characters)
Bonjour service name	XXXXXXXXXXXXX XXXXXXXXXXXXX XXXXXXXXXXXXX XXXXXXXXXXXXX (up to 52 characters)

  ("XX" represents alphanumeric characters.)

- **Enable/disable Wi-Fi**

  Enables/disables Wi-Fi.

- **Wi-Fi setup**

  Selects the setup method for Wi-Fi connection.

  - **Easy wireless connect**

Select if you specify the settings of the access point information to the printer directly from a device (e.g. smartphone, or tablet) without operating the wireless router. Follow the on-screen instructions of the connecting device for the setup procedure.

- **Manual connect**

  Select when you perform settings for Wi-Fi manually using the operation panel of the printer.

- **WPS (Push button method)**

  Select when you perform settings for Wi-Fi using a wireless router supporting a Wi-Fi Protected Setup (WPS) push button method. Follow the on-screen instructions during setup.

- **Other connection types**

  - **Manual connect (adv.)**

    Select when you perform settings for Wi-Fi manually. You can specify multiple WEP keys.

  - **WPS (PIN code method)**

    Select when you perform settings for Wi-Fi using a wireless router supporting a Wi-Fi Protected Setup (WPS) PIN code method. Follow the on-screen instructions during setup.

- **Advanced setup**

  For details on each setting item:

  ➡ Advanced setup

Wireless Direct

- **Wireless Direct setting list**

  The network settings information of the printer appears when it is connected by the wireless direct. (Some setting items are not displayed depending on the printer settings.)

  Note

  - To show or hide the password, select **Show password/Hide password** in the **Wireless Direct setting list** screen.

Items	Setting
Connection	Enable/Disable
Network name (SSID)	DIRECT-XXXXXXXXX XXXXXXXXXXXXXXXX (up to 32 characters)
Password	XXXXXXXXXX (10 characters)
Wi-Fi security	WPA2-PSK(AES)
No. of printers connected now	XX/XX
IPv4 address	XXX. XXX. XXX. XXX (12 characters)
IPv4 subnet mask	XXX. XXX. XXX. XXX (12 characters)
IPv4 default gateway	XXX. XXX. XXX. XXX (12 characters)

IPv6 link-local address	XXXX: XXXX: XXXX: XXXX: XXXX: XXXX: XXXX: XXXX (32 characters)
MAC address (Wi-Fi)	XXX. XXX. XXX. XXX (12 characters)
Printer name	XXXXXXXXXXXXXXX (up to 15 characters)
Bonjour service name	XXXXXXXXXXXXX XXXXXXXXXXXXX XXXXXXXXXXXXX XXXXXXXXXXXXX (up to 52 characters)

("XX" represents alphanumeric characters.)

- **Connect to smartphone**

  Enables to connect the smartphone to the printer by reading the QR code displayed on the touch screen with the smartphone, or also by manually obtaining the network name and password.

- **Enable/disable Wireless Direct**

  Enables/disables Wireless Direct.

- **Change network name (SSID)**

  Changes the identifier (SSID/the printer's name displayed on a Wi-Fi Direct compatible device) for Wireless Direct.

- **Change password**

  Changes the password for Wireless Direct.

- **Connection request confirmation**

  Selecting **ON** displays the confirmation screen when a Wi-Fi Direct compatible device is connecting the printer.

- **Advanced setup**

  For details on each setting item:

  ➡ Advanced setup

Advanced setup

- **Set printer name**

  Specifies the printer name. You can use up to 15 characters for the name.

  Note

  - You cannot use the same printer name as that already used for other LAN connected devices.
  - You cannot use a hyphen for the initial or last character of the printer name.

- **TCP/IP settings**

  Performs IPv4 or IPv6 setting.

- **WSD settings**

  Setting items when you use WSD (one of the network protocols supported in Windows).

- **Enable/disable WSD**

  Selects whether WSD is enabled or disabled.

  Note

  - When this setting is enabled, the printer icon is displayed on the Network Explorer in Windows.

- **Optimize inbound WSD**

  Selecting **Enable** allows you to receive the WSD printing data faster.

- **WSD scan from this printer**

  Selecting **Enable** allows you to transfer the scanned data to the computer using WSD. To transfer the scanned data, press the **Color** button.

  Note

  - When you forward the scanned data to the computer searched using WSD, you cannot select the document type.

- **Timeout settings**

  Specifies the timeout length.

- **Bonjour settings**

  Setting items when you use Bonjour.

  - **Enable/disable Bonjour**

    Selecting **Enable** allows you to use Bonjour to perform the network settings.

  - **Service name**

    Specifies the Bonjour service name. You can use up to 48 characters for the name.

    Note

    - You cannot use the same service name as that already used for other LAN connected devices.

- **LPR protocol settings**

  Enables/disables the LPR setting.

- **RAW protocol**

  Enables/disables RAW printing.

- **LLMNR**

  Enables/disables LLMNR (Link-Local Multicast Name Resolution). Selecting **Enable** allows the printer to detect printer's IP address from the printer name without a DNS server.

- **IPP settings**

  Selecting **Enable** allows you to print via the network with the IPP protocol.

- **PictBridge communication**

  Setting items for printing from a PictBridge (Wi-Fi) compliant device.

- **Enable/disable communication**

  Selecting **Enable** allows you to print from a PictBridge (Wi-Fi) compliant device.

- **Timeout setting**

  Specifies the timeout length.

- **IPsec settings**

  Selecting **Enable** allows you to specify the IPsec security.

Other printer settings

- **Date/time settings**

  Sets the current date and time.

  ➡ Setting Sender Information

  Important

  - If a power failure occurs or you unplug the power cord, the date/time settings will be reset.

- **Date display format**

  Changes the display format of dates when printed.

- **Daylight saving time setting**

  Enables/disables the summer time setting. If you select **ON**, you can select additional sub-settings. This setting may not be available depending on the country or region of purchase.

  - **Start date/time**

    Sets the date and time that summer time starts.

    Month: Specify the month.

    Week: Specify the week.

    DOW: Specify the day of the week.

    The screen to set the shift time to start summer time will be displayed after specifying the items above and selecting **OK**.

    After specifying the shift time and selecting **OK**, you can specify the end date/time.

  - **End date/time**

    Sets the date and time that summer time ends.

    Month: Specify the month.

    Week: Specify the week.

    DOW: Specify the day of the week.

    The screen to set the shift time to end summer time will be displayed after specifying the items above and selecting **OK**.

    Specify the shift time and select **OK**.

- **Sound control**

  Selects the volume.

  - **Keypad volume**

    Selects the beep volume when tapping the touch screen or the buttons on the operation panel.

  - **Alarm volume**

    Selects the alarm volume.

  - **Line monitor volume**

Selects the line monitor volume.

- **Offhook alarm**

  Selects the alarm volume when the phone receiver is not put on the hook properly.

- **Energy saving settings**

  Allows you to turn on/off the printer automatically to save electricity.

  - **Auto power off**

    Specifies the length of time to turn off the printer automatically when no operation is made or no printing data is sent to the printer.

  - **Auto power on**

    Selecting **ON** enables the printer to turn on automatically when a scanning command from a computer or printing data is sent to the printer.

Note

- You can also select this setting by selecting (Setup) on the HOME screen, selecting **ECO**, and then selecting **Energy saving settings**.

  ➡ ECO settings

- **Original removal reminder**

  Selects whether the printer will display the reminder screen in case you forget to remove the original from the platen after scanning.

Important

- Depending on the type of original or the state of the document cover, forgetting to remove the original may not be detected.

- **Wi-Fi pairing settings**

  In order to connect Canon PRINT Inkjet/SELPHY, multiple configurations will be performed.

  - **Enable/disable pairing**

    Set the printer's Wi-Fi pairing function to enable or disable.

  - **Allow/block additional pairing**

    On another function permit or prohibit Canon PRINT Inkjet/SELPHY pairing.

  - **Delete paired devices**

    Cancel all Canon PRINT Inkjet/SELPHY pairing.

- **Keyboard layout**

  Select the keyboard layout from the following three types.

  - **QWERTY**
  - **QWERTZ**

- **AZERTY**

Language selection

Changes the language for the messages and menus on the touch screen.

Japanese / English / German / French / Italian / Spanish / Portuguese / Dutch / Danish / Norwegian / Swedish / Finnish / Russian / Ukrainian / Polish / Czech / Slovene / Hungarian / Slovak / Croatian / Romanian / Bulgarian / Turkish / Greek / Estonian / Latvian / Lithuanian / Simplified Chinese / Korean / Traditional Chinese / Thai / Indonesian / Vietnamese

Firmware update

You can update the firmware of the printer, check the firmware version, or perform settings of a notification screen, a DNS server and a proxy server.

Important

- When you use this function, make sure the printer is connected to the Internet.

Note

- Only **Check current version** is available when **Enable** is selected for **Enable/disable Wi-Fi** of **Wi-Fi** in **LAN settings**.

- **Install update**

  Performs the firmware update of the printer. If you select **Yes**, the firmware update starts. Follow the on-screen instructions to perform update.

  #### Note

  - If the firmware update is not complete, check the following and take an appropriate action.
    - Check the network settings such as a wireless router.
    - If **Cannot connect to the server.** is displayed on the touch screen, select **OK** and try again after a while.

- **Check current version**

  You can check the current firmware version.

- **Update notification settings**

  When **ON** is selected and the firmware update is available, the screen to inform you of the firmware update is displayed on the touch screen.

- **DNS server setup**

  Performs settings for a DNS server. Select **Auto setup** or **Manual setup**. If you select **Manual setup**, follow the display on the touch screen to perform settings.

- **Proxy server setup**

  Performs settings for a proxy server. Follow the display on the touch screen to perform settings.

Reset setting

You can set the settings back to the default.

- **Web service setup only**

  Sets the Web service settings back to the default.

- **LAN settings only**

  Sets the LAN settings back to the default.

- **Telephone number only**

  Deletes all registered telephone/fax numbers.

- **Settings only**

  Returns the settings such as the paper size, media type, or other setting items back to the default. The LAN settings and the telephone/fax number are not returned back to the default.

- **Fax settings only**

  Returns all fax settings back to the default. Disconnect the telephone line from the printer before you return this setting item back to the default.

  After resetting, perform setup again as necessary.

- **Reset all**

  Sets all settings you made to the printer back to the default. The administrator password specified by Remote UI or IJ Network Device Setup Utility reverts to the default setting.

  After resetting, perform setup again as necessary.

Note

- You cannot set the following setting items back to the default:
  - The language displayed on the touch screen
  - The current position of the print head
  - The country or region selected for **Country or region**
  - CSR (Certificate Signing Request) for encryption method (SSL/TLS) setting

  You can delete the registered user's name or telephone number following the procedure below.

  1. Display **User information settings** screen.

     ➡ Setting Sender Information

  2. Select user's name or telephone number and delete all characters or numbers.
  3. Select **OK** when you finished deleting all characters or numbers.

Feed settings

By registering the paper size and the media type loaded on the rear tray or in the cassette, you can prevent the printer from misprinting by displaying the message before printing starts when the paper size or the media type of the loaded paper differs from the print settings.

For details:

➡ Paper Settings

Note

- For more on the proper combination of paper settings you can specify by the printer driver (Windows) or on the touch screen:

  ➡ Paper Settings on the Printer Driver and the Printer (Media Type)
  ➡ Paper Settings on the Printer Driver and the Printer (Paper Size)

- **Rear tray paper settings**

  Registers the paper size and the media type you load on the rear tray.

- **Cassette paper settings**

  Registers the paper size and the media type you load in the cassette.

  ### Note

  - Plain paper can only be loaded in the cassette.

- **Detect paper setting mismatch**

  If you select **Enable**, the printer detects whether the paper size and the media type are identical with those registered in **Feed settings**. If printing starts with the settings that do not match, an error message is displayed on the touch screen.

  ### Note

  - When **Disable** is selected, the settings in **Feed settings** is disabled.

- **Check paper replacement**

  If you select **ON**, the printer detects the paper replacement (the feed slot cover is opened or closed, the cassette is reinserted). When the paper registration screen is displayed after replacing paper, register the paper size and the media type.

Web service setup

Select this setting item from **Web service setup** in (Setup).

- **Web service usage registration/Web service usage cancellation**

  Registers/Deletes Web service usage to use the printer device information to/from PIXMA/MAXIFY Cloud Link.

- **Web service connection setup**

  The following setting items are available.

  - **IJ Cloud Printing Center setup**

    Registers/Deletes the printer to/from Canon Inkjet Cloud Printing Center.

  - **Check Web service setup**

    Make sure whether the printer is registered to Canon Inkjet Cloud Printing Center.

- **Issue registration code**

  In order to link the web service and printer, obtain the registration code from the service origin.

- **DNS server setup**

  Performs settings for a DNS server. Select **Auto setup** or **Manual setup**. If you select **Manual setup**, follow the display on the touch screen to perform settings.

- **Proxy server setup**

  Performs settings for a proxy server. Follow the display on the touch screen to perform settings.

ECO settings

This setting allows you to use automatic duplex printing as a default to save paper and to turn on/off the printer automatically to save electricity.

➡ Using Power Saving Function
➡ Using Duplex Printing

Using Power Saving Function

Follow the procedure below to use power saving function.

1. Check that printer is turned on.

2. Select (Setup) on the HOME screen.

   ➡ Using Touch Screen

3. Select **ECO**.

4. Select **Energy saving settings**.

5. Check on-screen instructions and select **Next**.

6. Specify settings as necessary.

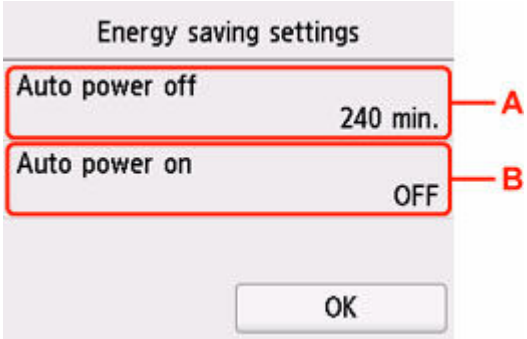

A: Specify the length of time to turn the printer off automatically when no operation is made or no printing data is sent to the printer.

B: Selecting **ON** enables the printer to turn on automatically when a scanning command from a computer or printing data is sent to the printer.

Using Duplex Printing

Follow the procedure below to use duplex printing.

1. Check that printer is turned on.

2. Select (Setup) on the HOME screen.

   ➡ Using Touch Screen

3. Select **ECO**.

4. Select **Two-sided print settings**.

5. Specify settings as necessary.

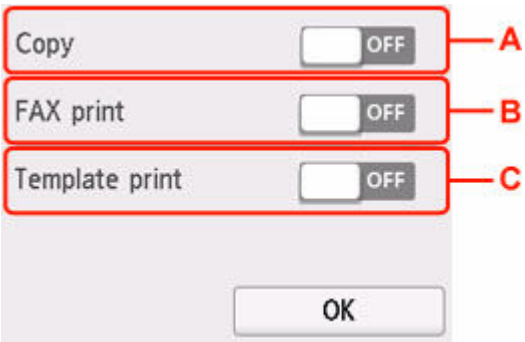

A: Select two-sided copying as a default.

B: Select two-sided printing of sent/received faxes, reports, or lists as a default.

C: Select two-sided printing of template forms on the printer as a default.

Note

- When duplex printing is selected, the icon is displayed on the setting items for duplex printing on each print settings screen.

Quiet setting

Enables this function on the printer if you want to reduce the operating noise, such as when printing at night. In addition, you can specify the time range to reduce the operating noise.

Important

- Set the current date and time in advance.

  ➡ Setting Sender Information

Follow the procedure below to perform setting.

1. Check that printer is turned on.

2. Select (Setup) on the HOME screen.

   ➡ Using Touch Screen

3. Select **Quiet setting**.

4. Select **ON** or **Use during specified hours**.

   - When **ON** is selected:

     You can reduce the operating noise while printing is in progress.

   - When **Use during specified hours** is selected:

     The screen to specify starting/ending time is displayed.

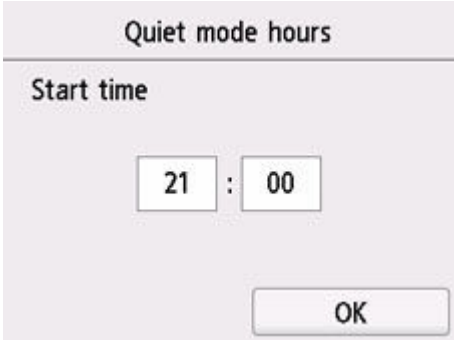

Tap Time and specify **Start time**.

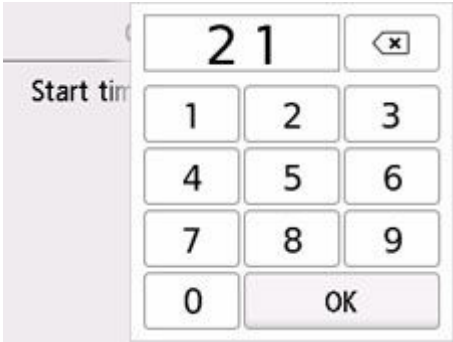

Specify **End time** in the same procedure, and select **OK**.

You can reduce the operating noise during the specified time.

The confirmation screen is displayed and the

icon appears as the **Quiet setting** menu icon.

Important

- Operating speed is reduced compared to when **OFF** is selected.
- This function may not be so effective depending on the printer's setting. Furthermore, certain noise, such as when the printer is preparing for printing, is not reduced.

Note

- You can set the quiet mode from the operation panel of the printer, the printer driver, or ScanGear (scanner driver). No matter how you set the quiet mode, the mode is applied when you perform operations from the operation panel of the printer or printing and scanning from the computer.

System information

To display this menu, select **System information** in (Hint).

- **Current version**

  Displays the current firmware version.

- **Printer name**

  Displays the printer name currently specified.

- **Serial number**

  Displays the printer serial number.

- **MAC address (Wi-Fi)**

  Displays the MAC address for Wi-Fi.

- **Root cert. thumbprint (SHA-1)**

  Shows the root certification thumbprint (SHA-1) of the printer.

  Note

  - If the password is set to the printer, the password may be requested.

- **Root cert. thumbprint (SHA-256)**

  Shows the root certification thumbprint (SHA-256) of the printer.

  Note

  - If the password is set to the printer, the password may be requested.

Specifications

General Specifications

Interface	**USB Port:** Hi-Speed USB * **Network Port:** Wi-Fi: IEEE802.11n / IEEE802.11g / IEEE802.11b * A computer that complies with Hi-Speed USB standard is required. Since the Hi-Speed USB interface is fully upwardly compatible with USB 1.1, it can be used at USB 1.1. USB and the network can be used at the same time.
Operating environment	**Temperature:** 41 to 95 °F (5 to 35 °C) **Humidity:** 10 to 90 % RH (no condensation) * The performance of the printer may be reduced under certain temperature and humidity conditions. Recommended conditions: **Temperature:** 59 to 86 °F (15 to 30 °C) **Humidity:** 10 to 80 % RH (no condensation) * For the temperature and humidity conditions of papers such as photo paper, refer to the paper's packaging or the supplied instructions.
Storage environment	**Temperature:** 32 to 104 °F (0 to 40 °C) **Humidity:** 5 to 95 % RH (no condensation)
Power supply	AC 100-240 V, 50/60 Hz (The supplied power cord is only for the country or region you purchased.)
Power consumption	**Printing (Copy):** 13 W or less *1 **Standby (minimum):** 1.0 W or less *1*2 **Standby (all ports connected):** 1.8 W or less **OFF:** 0.3 W or less *1 USB connection to a PC *2 The wait time for standby cannot be changed.
External dimensions (W x D x H)	Approx. 17.3 x 13.8 x 7.5 in. (Approx. 438 x 350 x 190 mm) * With the Cassette and trays retracted.
Weight	Approx. 17.3 lb (Approx. 7.9 kg) * With the Print Head and ink tanks installed.

Scan Specifications

Scanner driver	**Windows:** TWAIN 1.9 Specification, WIA
Maximum scanning size	**Platen:** A4/Letter, 8.5 x 11.7 in. (216 x 297 mm) **ADF:** A4/Letter/Legal, 8.5 x 14.0 in. (216 x 356 mm)
Optical resolution (horizontal x vertical)	1200 x 2400 dpi * * Optical Resolution represents the maximum sampling rate based on ISO 14473.
Gradation (Output)	**Gray:** 8 bit **Color:** RGB each 8 bit

Fax Specifications

Applicable line	Public Switched Telephone Network (PSTN) IP phone line (IP phone line with quality of no problem at all by using in conversation)
Communication mode	Super G3, G3
Data compressing system	**Black:** MH, MR, MMR **Color:** JPEG
Modem speed	max. 33.6 kbps (Automatic fallback)
Transmission speed	**Black:** Approx. 3 seconds/page at 33.6 kbps (Based on ITU-T No.1 chart for US specifications and Canon FAX Standard chart No.1 for others, both in standard mode.) **Color:** Approx. 1 minute/page at 33.6 kbps (Based on Canon COLOR FAX TEST SHEET.)
Gradation	**Black:** 256 levels **Color:** 24 bit Full Color (RGB each 8 bit)
Density adjustment	3 levels
Memory	**Transmission/reception:** approx. 250 pages (Based on ITU-T No.1 chart for US specifications and Canon FAX Standard chart No.1 for others, both in standard mode.)
Fax resolution	**Black Standard:** 203 pels/in. x 98 lines/in. (8 pels/mm x 3.85 lines/mm) **Black Fine, Photo:** 203 pels/in. x 196 lines/in. (8 pels/mm x 7.7 lines/mm) **Black Extra fine:** 300 x 300 dpi **Color:** 200 x 200 dpi
Dialing	Automatic dialing

	• Recipient (max. 100 destinations) • Group dial (max. 99 destinations) Regular dialing (with Numeric buttons) Automatic redialing Manual redialing (max. 10 destinations)
Others	Activity report (after every 20 transactions) Sequential broadcasting (max. 101 destinations) Rejected numbers (max. 10 destinations) Err reduction (VoIP) * * For details, see "**Error reduction setting (VoIP)**" in "**Advanced FAX settings**".

Network Specifications

Communication protocol	SNMP, HTTP, TCP/IP (IPv4/IPv6)
Wi-Fi	**Supported Standards:** IEEE802.11n / IEEE802.11g / IEEE802.11b **Frequency bandwidth:** 2.4 GHz **Channel:** 1-11 or 1-13 * Frequency bandwidth and available channels differ depending on country or region. **Communication distance:** Indoors 164 feet/50 m * Effective range varies depending on the installation environment and location. **Security:** WEP (64/128 bits) WPA-PSK (TKIP/AES) WPA2-PSK (TKIP/AES) **Setup:** WPS (Push button configuration/PIN code method) Easy wireless connect

Minimum System Requirements

Conform to the operating system's requirements when higher than those given here.

Windows

Operating System	Windows 10, Windows 8.1, Windows 7 SP1 Note: Operation can only be guaranteed on a PC with pre-installed Windows 7 or later.
Amount of hard disk space required for installing the driver	1.5 GB or more

	The necessary amount of hard disk space may be changed without notice.

macOS

Operating System	macOS 10.12.6 - macOS 10.15

Other Supported OS

iOS, iPadOS, Android, Chrome OS

Some functions may not be available with the supported OS.

Refer to the Canon web site for details.

Information in this manual is subject to change without notice.

Information about Paper

- **Supported Media Types**
  - Paper Load Limit
- **Unsupported Media Types**
- **Handling Paper**
- **Before Printing on Art Paper**
- **Print Area**

Supported Media Types

For best results, choose paper designed for how you are printing. A variety of paper for documents as well as photos or illustrations is available from Canon. Use genuine Canon paper to print important photos, when possible.

- Media Types
- Page Sizes
- Paper Weight

Media Types

Genuine Canon paper

Note

- For warnings on use of the non-printable side, see each product's usage information.
- Page sizes and media types differ depending on the country or region where the paper is sold. For details on page sizes and media types, access the Canon website.
- Genuine Canon paper is not available in some countries or regions. Note that in the United States, Canon paper is not sold by model number. Instead, purchase paper by name.

Paper for printing documents:

- Canon Red Label Superior <WOP111>
- Canon Océ Office Colour Paper <SAT213>
- High Resolution Paper <HR-101N>

Paper for printing photos:

- Photo Paper Pro Platinum <PT-101>
- Glossy Photo Paper "Everyday Use" <GP-501/GP-508>
- Photo Paper Glossy <GP-701>
- Photo Paper Plus Glossy II <PP-201/PP-208/PP-301>
- Photo Paper Pro Luster <LU-101>
- Photo Paper Plus Semi-gloss <SG-201>
- Matte Photo Paper <MP-101>
- Premium Fine Art Rough <FA-RG1>

Paper for making original goods:

- Photo Stickers (16 stickers per sheet) <PS-108>
- Photo Stickers (Free Cutting) <PS-208>
- Photo Stickers (Variety Pack) <PS-808>
- Restickable Photo Paper <RP-101>
- Removable Photo Stickers <PS-308R>

- Magnetic Photo Paper <MG-101/PS-508>
- Light Fabric Iron-on Transfers <LF-101>
- Dark Fabric Iron-on Transfers <DF-101>
- Double sided Matte Paper <MP-101D>

Paper other than genuine Canon paper

- Plain Paper (including recycled paper)
- Envelopes
- T-Shirt Transfers
- Greeting Card
- Card Stock
- Japanese Paper

➡ Paper Load Limit
➡ Paper Settings on the Printer Driver and the Printer (Media Type) (Windows)

Note

- When printing photos saved on a PictBridge (Wi-Fi) compliant device, you must specify the page size and media type.

  ➡ Printing from Digital Camera

- When using art paper, see Before Printing on Art Paper.

Page Sizes

You can use the following page sizes.

Note

- Page sizes and media types the printer supports differ depending on the OS you are using.

Standard sizes:

- Letter
- Legal
- A5
- A4
- B5
- KG/4"x6"(10x15)
- 5"x7"(13x18cm)
- 7"x10"(18x25cm)
- 8"x10"(20x25cm)
- L(89x127mm)

- 2L(127x178mm)
- Square 3.5"
- Square 5"
- Hagaki
- Hagaki 2
- Envelope Com 10
- Envelope DL
- Nagagata 3
- Nagagata 4
- Yougata 4
- Yougata 6
- Card 2.17"x3.58"

Special sizes

- Minimum size: 2.17 x 3.50 in. (55.0 x 89.0 mm)
- Maximum size: 8.50 x 26.61 in. (215.9 x 676.0 mm)

Paper Weight

You can use paper in the following weight range.

- Plain paper: From 17 to 28 lb (64 to 105 g /m^2)

Paper Load Limit

This section shows the paper load limits of the rear tray, the cassette, and the paper output tray.

- Paper Load Limits of Rear Tray and Cassette
- Paper Load Limit of Paper Output Tray

Note

- Page sizes and media types differ depending on the country or region where the paper is sold. For details on page sizes and media types, access the Canon website.

Paper Load Limits of Rear Tray and Cassette

Genuine Canon Paper

Paper for printing documents:

Media Name <Model No.>	Rear Tray	Cassette
Canon Red Label Superior <WOP111>	Approx. 100 sheets	Approx. 100 sheets
Canon Océ Office Colour Paper <SAT213>	Approx. 80 sheets	Approx. 80 sheets
High Resolution Paper <HR-101N>*1	Approx. 80 sheets	N/A

Paper for printing photos:

Media Name <Model No.>	Rear Tray
Photo Paper Pro Platinum <PT-101>*2 Glossy Photo Paper "Everyday Use" <GP-501/GP-508>*2 Photo Paper Glossy <GP-701>*2 Photo Paper Plus Glossy II <PP-201/PP-208/PP-301>*2 Photo Paper Pro Luster <LU-101>*2 Photo Paper Plus Semi-gloss <SG-201>*2 Matte Photo Paper <MP-101>	A4, Letter, 5"x7"(13x18cm), 8"x10"(20x25cm), 2L(127x178mm): 10 sheets KG/4"x6"(10x15), L(89x127mm), Square 3.5", Square 5", Hagaki: 20 sheets
Premium Fine Art Rough <FA-RG1>	1 sheet

Paper for making original goods:

Media Name <Model No.>	Rear Tray
Photo Stickers (16 stickers per sheet) <PS-108> Photo Stickers (Free Cutting) <PS-208> Photo Stickers (Variety Pack) <PS-808> Restickable Photo Paper <RP-101> Removable Photo Stickers <PS-308R> Magnetic Photo Paper <MG-101/PS-508>	1 sheet

Light Fabric Iron-on Transfers <LF-101> Dark Fabric Iron-on Transfers <DF-101> Double sided Matte Paper <MP-101D>	

Paper other than Genuine Canon Paper

Common Name	Rear Tray	Cassette
Plain Paper (including recycled paper)*1	Approx. 100 sheets (Legal: 10 sheets)	Approx. 100 sheets
Envelopes	10 envelopes	N/A
T-Shirt Transfers	1 sheet	N/A
Greeting Card	1 sheet	N/A
Card Stock	1 sheet	N/A
Japanese Paper	1 sheet	N/A

*1 Normal feeding at maximum capacity may not be possible with some types of paper, or under very high or low temperature or humidity. In this case, load half the amount of paper or less.
*2 Feeding from a loaded stack of paper may leave marks on the printed side or prevent efficient feeding. In this case, load one sheet at a time.

Paper Load Limit of Paper Output Tray

Genuine Canon Paper

Paper for printing documents:

Media Name <Model No.>	Paper Output Tray
Canon Red Label Superior <WOP111> Canon Océ Office Colour Paper <SAT213> High Resolution Paper <HR-101N>	Approx. 50 sheets

Paper other than Genuine Canon Paper

Common Name	Paper Output Tray
Plain Paper (including recycled paper)	Approx. 50 sheets (Legal: 10 sheets)

When continuing printing with paper other than the above, we recommend removing already printed paper from the paper output tray to avoid smearing or discoloration.

Unsupported Media Types

Do not use the following types of paper. Using such paper will cause not only unsatisfactory results, but also the printer to jam or malfunction.

- Folded, curled, or wrinkled paper
- Damp paper
- Paper thinner than a postcard, including plain paper or notepad paper cut to a small size (when printing on paper smaller than A5)
- Picture postcards
- Postcards
- Envelopes with a double flap
- Envelopes with an embossed or treated surface
- Envelopes whose gummed flaps are already moistened and adhesive
- Any type of paper with holes
- Paper that is not rectangular
- Paper bound with staples or glue
- Paper with an adhesive surface on the back such as label seal
- Paper decorated with glitter, etc.

Handling Paper

- Be careful not to rub or scratch the surfaces of any types of paper when handling.
- Hold the paper as closely as possible to its edges and try not to touch the printing surface. The print quality may be degraded if the printing surface is smudged with sweat or oil that comes from your hands.
- Do not touch the printed surface until the ink is dried. Even when the ink is dried, be careful not to touch the printed surface as much as possible when handling. Due to the nature of the pigment ink, the ink on the printed surface may be removed when being rubbed or scratched.
- Take out only the necessary number of paper from the package, just before printing.
- To avoid curling, when you do not print, put unused paper back into the package and keep it on a level surface. And also, store it avoiding heat, humidity, and direct sunlight.

Before Printing on Art Paper

When using art paper, dust is liable to be generated. It is therefore recommended that paper dust be removed on art paper just before printing.

You will need a soft hair brush (or similar brush used to clean office automation equipment).

The wider the brush, the more effective it will be.

OK - soft brush made from material such as polypropylene, polyethylene, horse hair or goat hair.

Important

- Be sure not to use brushes as shown below. The printing surface may be damaged.

Not OK - brush made from hard material, cloth or washcloth, sticky and abrasive materials.

Paper dust removal procedure:

1. Check that the brush is not wet and free from dust or dirt.

2. Brush the overall printing surface carefully in one direction.

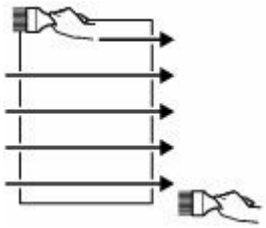

Important

- Be sure to brush all the way across the paper; do not start brushing at the middle or stop halfway.
- Be careful not to touch the printing surface as much as possible.

3. To complete the removal of paper dust, brush the paper in the other direction from top to bottom.

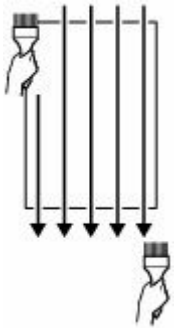

Printing

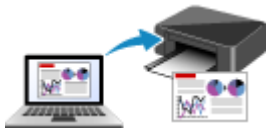

Printing from Computer

Printing from Smartphone/Tablet

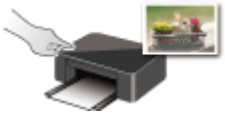

Printing Using Operation Panel

Printing from Digital Camera

Using PIXMA/MAXIFY Cloud Link

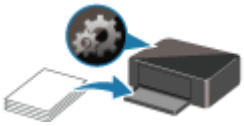

Paper Settings

Printing from Computer

- Printing from Application Software (Windows Printer Driver)
- Printing from Application Software (macOS AirPrint)
- Printing Using Canon Application Software
- Printing from Chrome OS

Printing from Application Software (Windows Printer Driver)

- Basic Printing Setup Basic
- Various Printing Methods
- Changing the Print Quality and Correcting Image Data
- Overview of the Printer Driver
- Printer Driver Description
- Updating the MP Drivers

Basic Printing Setup

This section describes settings on the **Quick Setup** tab used for basic printing.

Basic Printing Setup

1. Check that printer is turned on

2. Load paper in printer

3. Open printer driver's setup screen

4. Select frequently used settings

   On the **Quick Setup** tab, use **Commonly Used Settings** to select from predefined print settings. When you select a print setting, the settings for **Additional Features**, **Media Type**, and **Printer Paper Size** automatically switch to the predefined values.

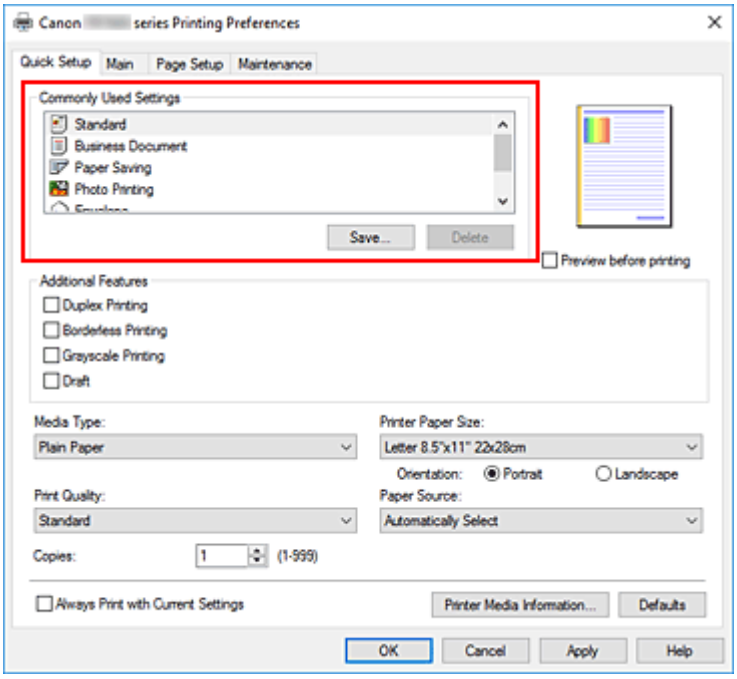

5. Select print quality

   For **Print Quality**, select from **High**, **Standard**, or **Draft**.

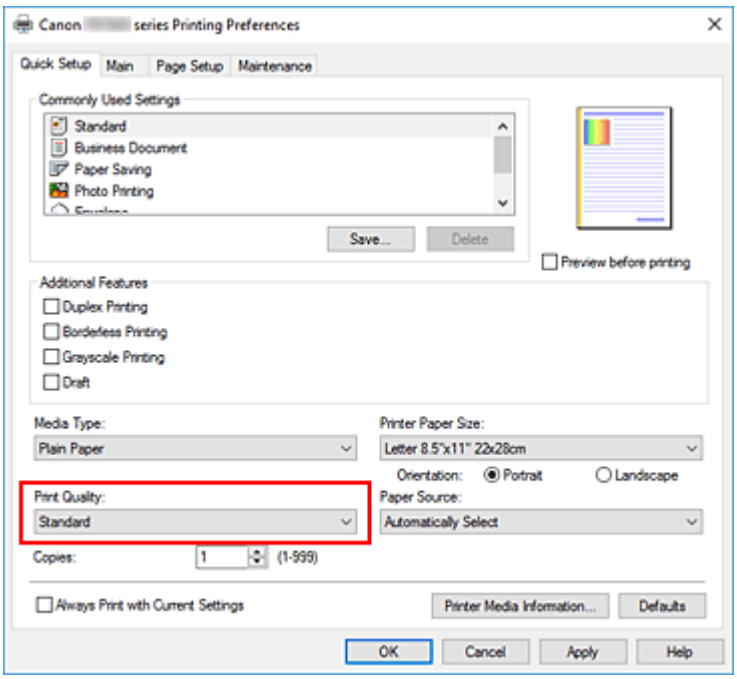

Important

- The print quality selections will differ depending on which print setting you select.

6. Select paper source

For **Paper Source**, select **Automatically Select**, **Rear Tray**, or **Cassette**, whichever matches your purpose.

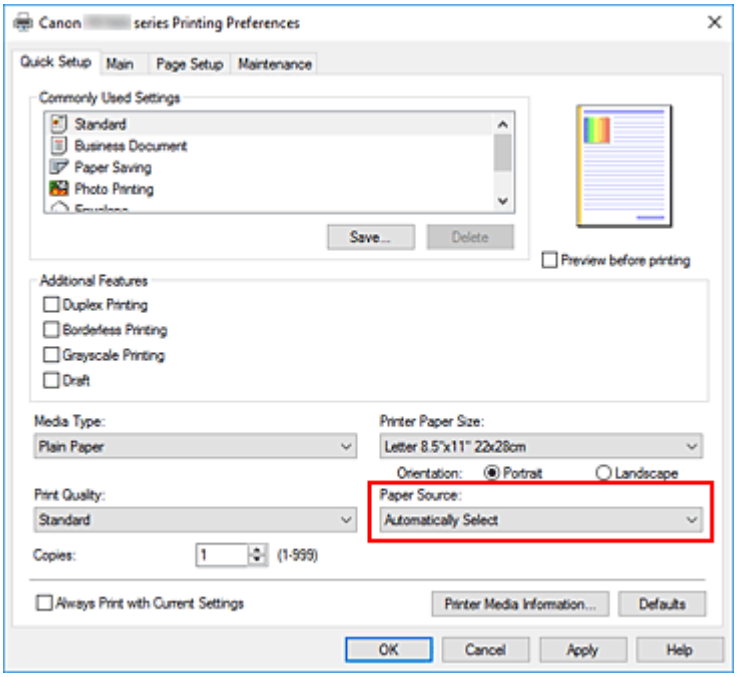

Important

- The paper source settings that can be selected may differ depending on the paper type and size.

7. Click **OK**

The printer will now print using these settings.

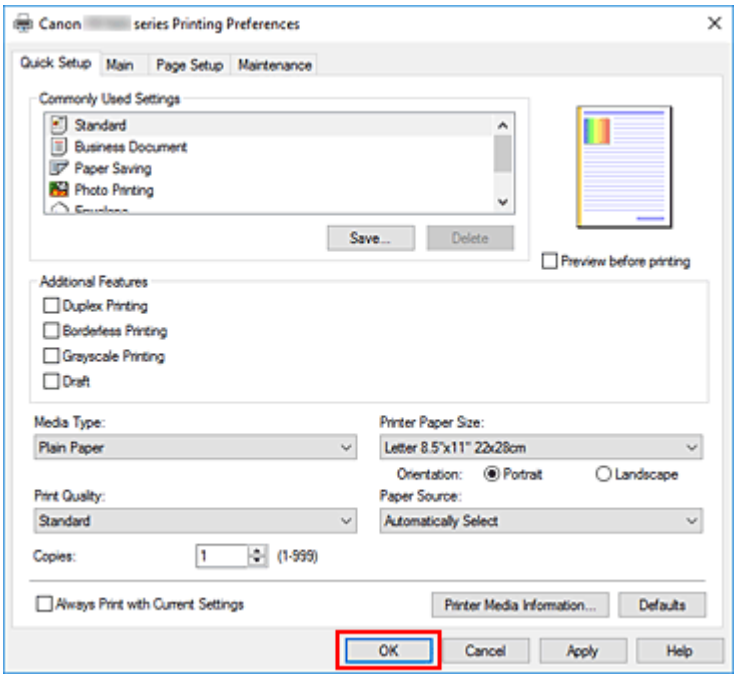

Important

- When you select **Always Print with Current Settings**, the settings on the **Quick Setup**, **Main**, and **Page Setup** tabs are saved, and those settings are used in subsequent printings.
- To register the current settings as a new preset, click **Save...** under **Commonly Used Settings**.

Note

- If the paper settings in the printer driver differ from the paper information registered on the printer, an error may occur. For instructions on what to do if an error occurs, see "Paper Settings."
  To check the current printer settings or to apply the printer settings to the printer driver, display the **Quick Setup** tab, click **Printer Media Information...**, and specify the settings in the dialog box that appears.
  For details about the paper information to be registered on the printer, see the following:
  - Paper Settings on the Printer Driver and the Printer (Media Type)
  - Paper Settings on the Printer Driver and the Printer (Paper Size)
- When you set **Media Type** to **Premium Fine Art Rough**, we recommend that you set **Printer Paper Size** to "XXX (Art Paper Margin 35)."
  If paper other than "XXX (Art Paper Margin 35)" is selected, an error message may be displayed. Select one of the page sizes in the displayed dialog box, or go to the **Page Setup** tab, display the **Print Options** dialog box, and change the **Cancel the safety margin regulation for paper size** setting.
  For information about printable ranges, refer to "Print Area."

Checking Printer Settings and Applying Settings to Printer Driver

1. Open printer driver setup window

2. On **Quick Setup** tab, click **Printer Media Information...**

   The **Printer Media Information** dialog box appears.

3. Select **Paper Source**

   From **Paper Source**, check the setting or select a new paper source.
   The current printer settings appear in **Media Type** and **Page Size**.

4. Apply settings

   To apply the printer settings to the printer driver, click **Set**.

Note

- If the media type in **Feed settings** on the printer is set to **Ink Jet Hagaki**, **Hagaki K**, or **Hagaki**, or if the paper size is set to **2L/5"x7"(13x18)**, click **Set** to display the dialog box.
  Select the media type and paper size that match your purpose, and then click **OK**.
- If the media type or the paper size on the printer are not set or are set to **Others**, **Set** will be grayed out and cannot be clicked.
- If communication with the printer is disabled, the **Printer Media Information...** dialog box will not appear or the printer driver will not be able to obtain printer media information.

Paper Settings on the Printer Driver and the Printer (Media Type)

When you use this printer, selecting a media type and paper size that matches the print purpose will help you achieve the best print results.
Depending on the media type you are using, specify the media type settings on the printer driver or the printer's operation panel as described below.

Canon genuine papers (Document Printing)

Media name <Model No.>	Media Type in the printer driver	Paper information registered on the printer
Canon Red Label Superior <WOP111>	**Plain Paper**	**Plain paper**
Canon Océ Office Colour Paper <SAT213>	**Plain Paper**	**Plain paper**
High Resolution Paper <HR-101N>	**High Resolution Paper**	**High-Res Paper**

Canon genuine papers (Photo Printing)

Media name <Model No.>	Media Type in the printer driver	Paper information registered on the printer
Photo Paper Plus Glossy II <PP-201/PP-208/PP-301>	**Photo Paper Plus Glossy II**	**Plus Glossy II**
Photo Paper Pro Platinum <PT-101>	**Photo Paper Pro Platinum**	**Pro Platinum**
Photo Paper Pro Luster <LU-101>	**Photo Paper Pro Luster**	**Pro Luster**
Photo Paper Plus Semi-gloss <SG-201>	**Photo Paper Plus Semi-gloss**	**Plus Semi-gloss**
Glossy Photo Paper "Everyday Use" <GP-501/GP-508>	**Glossy Photo Paper**	**Glossy**
Photo Paper Glossy <GP-701>	**Glossy Photo Paper**	**Glossy**
Matte Photo Paper <MP-101>	**Matte Photo Paper**	**Matte**
Premium Fine Art Rough <FA-RG1>	**Premium Fine Art Rough**	**Fine Art Rough**

Canon genuine papers (Original Product)

Media name <Model No.>	Media Type in the printer driver	Paper information registered on the printer
Restickable Photo Paper <RP-101>	**Glossy Photo Paper**	**Glossy**
Removable Photo Stickers <PS-308R>	**Glossy Photo Paper**	**Glossy**

Magnetic Photo Paper <MG-101/PS-508>	**Glossy Photo Paper**	**Glossy**
Light Fabric Iron-on Transfers <LF-101>	**Light Fabric Iron-on Transfers**	**LF Iron Transfers**
Dark Fabric Iron-on Transfers <DF-101>	**Dark Fabric Iron-on Transfers**	**DF Iron Transfers**
Double sided Matte Paper <MP-101D>	**Matte Photo Paper**	**Matte**

Commercially available papers

Media name	Media Type in the printer driver	Paper information registered on the printer
Plain Paper (including recycled paper)	**Plain Paper**	**Plain paper**
Envelopes	**Envelope**	**Envelope**
T-Shirt Transfers	**T-Shirt Transfers**	**Others**
Washi	**Washi**	**Others**
Greeting Cards	**Inkjet Greeting Card**	**Others**
Card Stock	**Card Stock**	**Card stock**

Note

- If **Media Type** in the **Main** sheet is set to **Premium Fine Art Rough**, we recommend that you set **Paper Size** in the **Page Setup** sheet to "XXX (Art Paper Margin 35)."
  For information about printable ranges, refer to "Print Area."
- For information on Washi that can be used with the printer, see "Print Using Washi."

Paper Settings on the Printer Driver and the Printer (Paper Size)

When you use this printer, selecting a paper size that matches the print purpose will help you achieve the best print results.
You can use the following paper sizes on this printer.

Printer Paper Size in the printer driver	Paper information registered on the printer
Letter 8.5"x11" 22x28cm	Letter
Legal 8.5"x14" 22x36cm	Legal
A5	A5
A4	A4
B5	B5
4"x6" 10x15cm	KG/4"x6"(10x15)
5"x7" 13x18cm	2L/5"x7"(13x18)
7"x10" 18x25cm	7"x10"(18x25cm)
8"x10" 20x25cm	8"x10"(20x25cm)
L 89x127mm	L(89x127mm)
2L 127x178mm	2L/5"x7"(13x18)
Square 3.5"x3.5" 9x9cm	Square 3.5"
Square 5"x5" 13x13cm	Square 5"
Letter (Art Paper Margin 35)	Letter
A4 (Art Paper Margin 35)	A4
Hagaki 100x148mm	Hagaki
Hagaki 2 200x148mm	Hagaki 2
Envelope Com 10	Envelope Com 10
Envelope DL	Envelope DL
Nagagata 3 4.72"x9.25"	Nagagata 3
Nagagata 4 3.54"x8.07"	Nagagata 4
Yougata 4 4.13"x9.25"	Yougata 4
Yougata 6 3.86"x7.48"	Yougata 6

Card 2.17"x3.58" 55x91mm	**Card 2.17"x3.58"**
Custom Size	**Others**

Various Printing Methods

- Setting a Page Size and Orientation
- Setting the Number of Copies and Printing Order
- Perform Borderless Printing
- Scaled Printing
- Page Layout Printing
- Duplex Printing
- Setting Up Envelope Printing
- Printing on Postcards

Setting a Page Size and Orientation

The paper size and orientation are essentially determined by the application software. When the page size and orientation set for **Page Size** and **Orientation** on the **Page Setup** tab are same as those set with the application software, you do not need to select them on the **Page Setup** tab.

When you are not able to specify them with the application software, the procedure for selecting a page size and orientation is as follows:
You can also set page size and orientation on the **Quick Setup** tab.

1. Open the printer driver setup window

2. Select the paper size

   Select a page size from the **Page Size** list on the **Page Setup** tab.

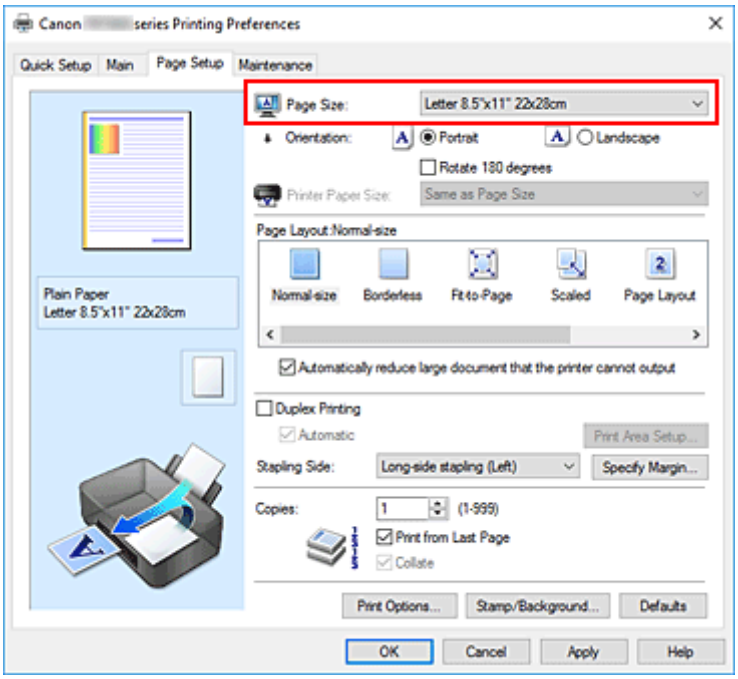

3. Set **Orientation**

   Select **Portrait** or **Landscape** for **Orientation**. Check **Rotate 180 degrees** check box when you want to perform printing with the original being rotated 180 degrees.

4. Click **OK**

   When you perform print, the document will be printed with the selected page size and the orientation.

Note

- If **Normal-size** is selected for **Page Layout**, then **Automatically reduce large document that the printer cannot output** is displayed.
  Normally, you can leave the check box checked. During printing, if you do not want to reduce large documents that cannot be printed on the printer, uncheck the check box.

Setting the Number of Copies and Printing Order

You can also set the number of copies on the **Quick Setup** tab.

1. Open the printer driver setup window

2. Specify the number of copies to be printed

   For **Copies** on the **Page Setup** tab, specify the number of copies to be printed.

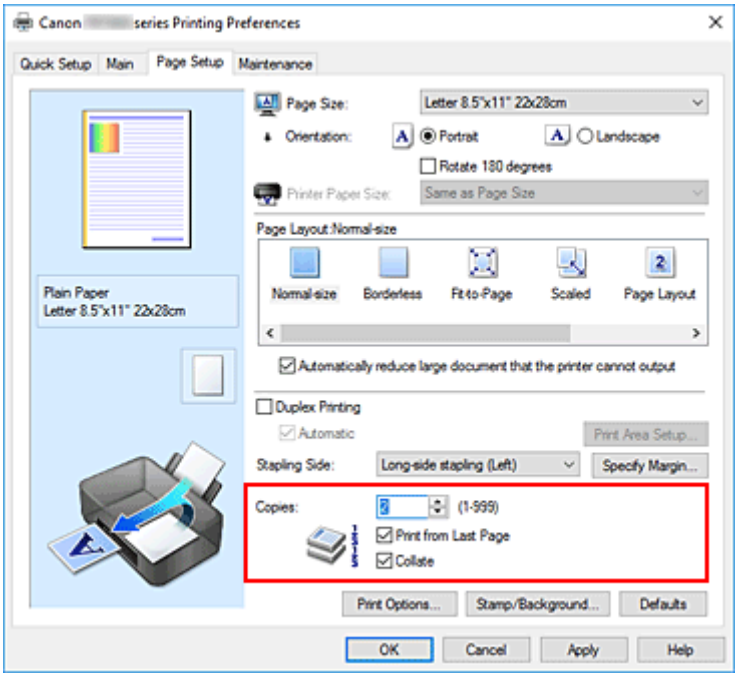

3. Specify the print order

   Check the **Print from Last Page** check box when you want to print from the last page in order, and uncheck the check box when you want to print from the first page.
   Check the **Collate** check box when you are printing multiple copies of a document and want to print out all pages in each copy together. Uncheck this check box when you want to print all pages with the same page number together.

   - **Print from Last Page**: ☑ /**Collate**: ☑

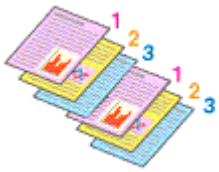

   - **Print from Last Page**: ☐ /**Collate**: ☑

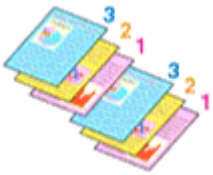

- **Print from Last Page**: ☑ /**Collate**: ☐

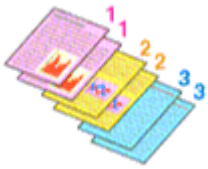

- **Print from Last Page**: ☐ /**Collate**: ☐

4. Click **OK**

When you perform print, the specified number of copies will be printed with the specified printing order.

Important

- When the application software that you used to create the document has the same function, specify the settings on the printer driver. However, if the print results are not acceptable, specify the function settings on the application software. When you specify the number of copies and the printing order with both the application software and this printer driver, the number of copies may be multiplied numbers of the two settings or the specified printing order may not be enabled.
- **Print from Last Page** appears grayed out and is unavailable when **Tiling/Poster** is selected for **Page Layout**.
- When **Booklet** is selected for **Page Layout**, **Print from Last Page** and **Collate** appear grayed out and cannot be set.
- When **Duplex Printing** is selected, **Print from Last Page** appears grayed out and cannot be set.

Note

- By setting both **Print from Last Page** and **Collate**, you can perform printing so that papers are collated one by one starting from the last page.
  These settings can be used in combination with **Normal-size**, **Borderless**, **Fit-to-Page**, **Scaled**, and **Page Layout**.

Perform Borderless Printing

The borderless printing function allows you to print data without any margin by enlarging the data so that it extends slightly off the paper. In standard printing, margins are created around the document area. However, in borderless printing function, these margins are not created. When you want to print data such as a photo without providing any margin around it, set borderless printing.

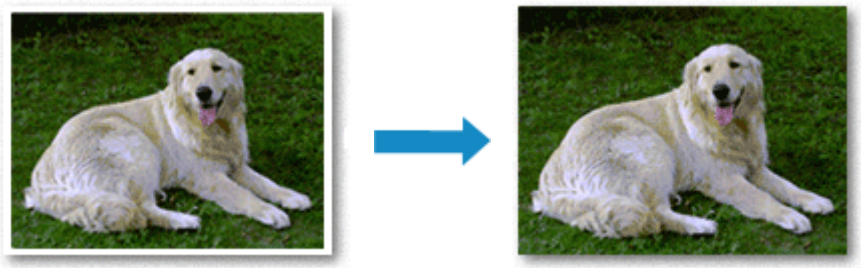

You can also set borderless printing in **Additional Features** on the **Quick Setup** tab.

Note

- You can also set **Amount of extension** on the operation panel of the printer, but the settings on the printer driver will be prioritized.

Setting Borderless Printing

1. Open the printer driver setup window

2. Set borderless printing

   Select **Borderless** from the **Page Layout** list on the **Page Setup** tab.

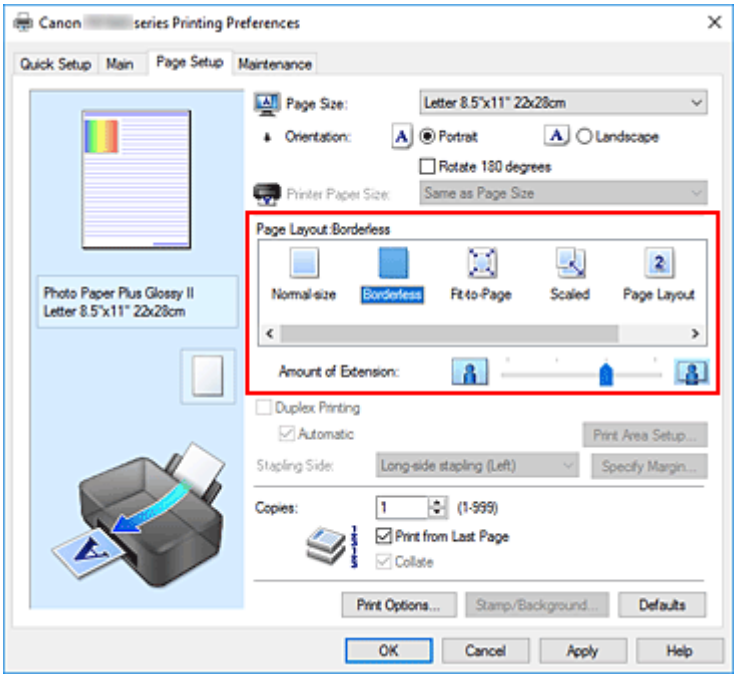

Click **OK** when the confirmation message appears.
When a message prompting you to change the media type appears, select a media type from the list and click **OK**.

3. Check the paper size

Check the **Page Size** list. When you want to change it, select another page size from the list. The list displays only sizes that can be used for borderless printing.

4. Adjust the amount of extension from the paper

If necessary, adjust the amount of extension using the **Amount of Extension** slider.
Moving the slider to the right increases the amount extending off the paper, and moving the slider to the left decreases the amount.
It is recommended to set the slider at the second position from the right for most cases.

Important

- When the **Amount of Extension** slider is set to the rightmost position, the back side of the paper may become smudged.

5. Click **OK**

When you perform print, the data is printed without any margins on the paper.

Important

- When a page size that cannot be used for borderless printing is selected, the size is automatically changed to the valid page sizes for borderless printing.
- When **Borderless** is selected, the **Printer Paper Size**, **Duplex Printing**, **Stapling Side** settings, and the **Stamp/Background...** button on the **Page Setup** tab appear grayed out and are unavailable.
- When **Washi**, **Envelope**, **Light Fabric Iron-on Transfers**, **Dark Fabric Iron-on Transfers**, **High Resolution Paper**, or **T-Shirt Transfers** is selected from the **Media Type** list on the **Main** tab, you cannot perform borderless printing.
- Depending on the type of the media used during borderless printing, the print quality may deteriorate at the top and bottom of the sheet or stains may form.
- When the ratio of the height to the width differs from the image data, a portion of the image may not be printed depending on the size of the media used.
  In this case, crop the image data with an application software according to the paper size.

Note

- When **Plain Paper** is selected for **Media Type** on the **Main** tab, borderless printing is not recommended. Therefore, the message for media selection appears.
  When you are using plain paper for test printing, select **Plain Paper**, and click **OK**.

Expanding the Range of the Document to Print

Setting a large amount of extension allows you to perform borderless printing with no problems. However, the portion of the document extending off the paper range will not be printed and for this reason, the subjects around the perimeter of a photo may not be printed.

When you are not satisfied with the result of borderless printing, reduce the amount of extension. The extension amount decreases as the **Amount of Extension** slider is moved to the left.

Important

- When the amount of extension is decreased, an unexpected margin may be produced on the print, depending on the size of the paper.

Note

- When the **Amount of Extension** slider is set to the leftmost position, image data will be printed in the full size. If you set this when printing the address side of a postcard, the postal code of the sender is printed in the correct position.
- When **Preview before printing** is checked on the **Main** tab, you can confirm whether there will be no margin before printing.
- To perform borderless full-page printing on **Premium Fine Art Rough** go to the **Page Setup** tab, display the **Print Options** dialog box, and change the **Cancel the safety margin regulation for paper size** setting.

Scaled Printing

1. Open the printer driver setup window

2. Set scaled printing

   Select **Scaled** from the **Page Layout** list on the **Page Setup** tab.

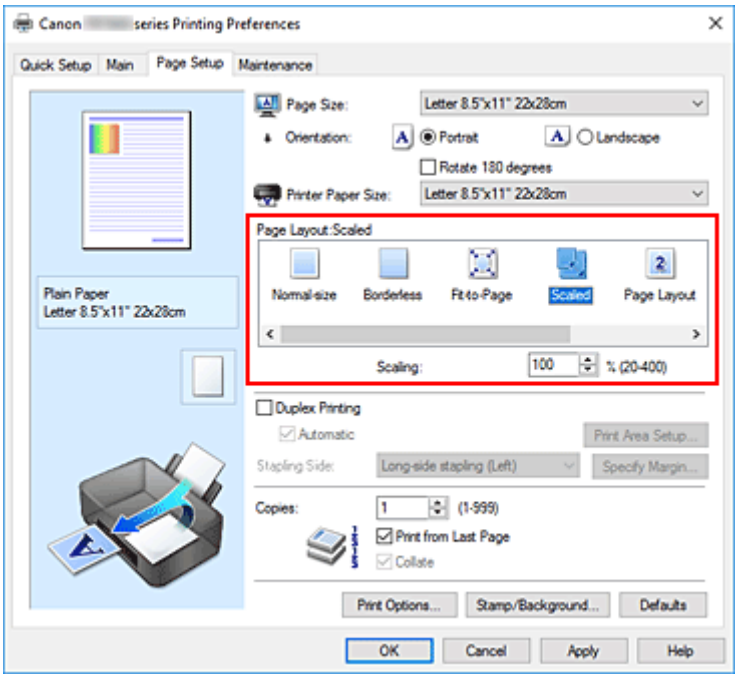

3. Select the paper size of the document

   Using **Page Size**, select the page size that is set with your application software.

4. Set the scaling rate by using one of the following methods:

   - Select a **Printer Paper Size**

     When the printer paper size is smaller than the **Page Size**, the page image will be reduced. When the printer paper size is larger than the **Page Size**, the page image will be enlarged.
   - Specify a scaling factor

Directly type in a value into the **Scaling** box. The current settings are displayed in the settings preview on the left side of the printer driver.

5. Click **OK**

   When you perform print, the document will be printed with the specified scale.

Important

- When the application software which you used to create the original has the scaled printing function, configure the settings on your application software. You do not need to configure the same setting in the printer driver.

Note

- Selecting **Scaled** changes the printable area of the document.

Page Layout Printing

The page layout printing function allows you to print more than one page image on a single sheet of paper.

1. Open the printer driver setup window

2. Set page layout printing

   Select **Page Layout** from the **Page Layout** list on the **Page Setup** tab.
   The current settings are displayed in the settings preview on the left side of the printer driver.

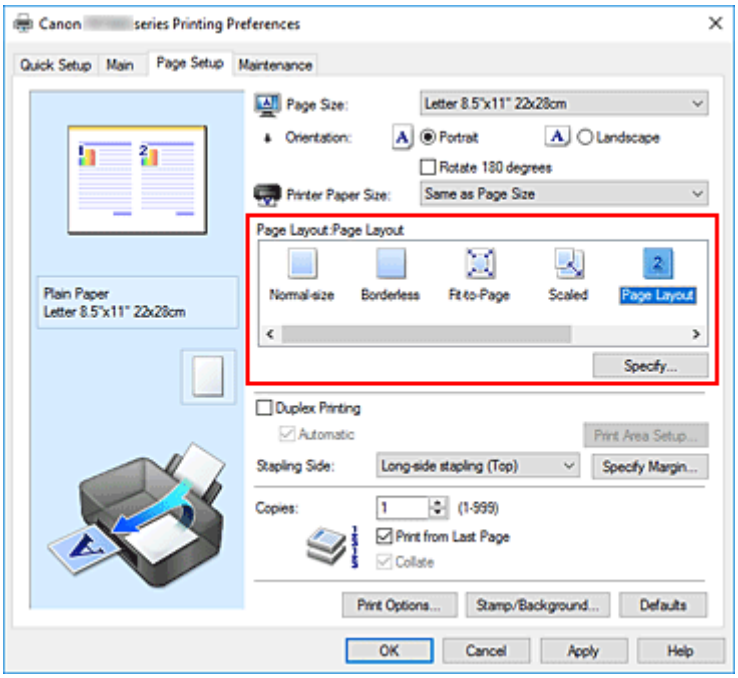

3. Select the print paper size

   Select the size of the paper loaded in the printer from the **Printer Paper Size** list.

4. Set the number of pages to be printed on one sheet and the page order

   If necessary, click **Specify...**, specify the following settings in the **Page Layout Printing** dialog box, and click **OK**.

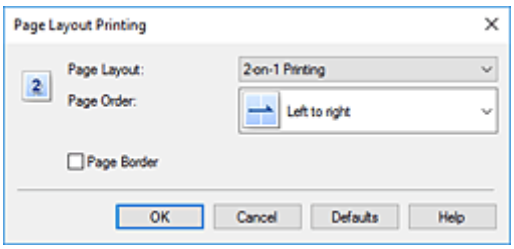

Page Layout

To change the number of pages to be printed on a single sheet of paper, select the number of pages from the list.

Page Order

To change the page arrangement order, select a placement method from the list.

Page Border

To print a page border around each document page, check this check box.

5. Complete the setup

Click **OK** on the **Page Setup** tab.

When you perform print, the specified number of pages will be arranged on each sheet of paper in the specified order.

Duplex Printing

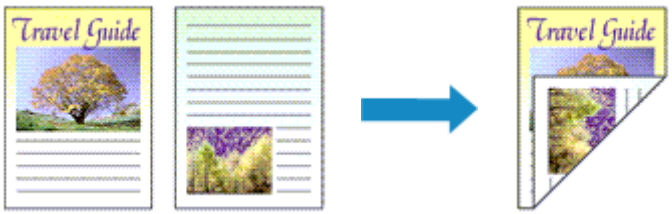

You can also set duplex printing in **Additional Features** on the **Quick Setup** tab.

Performing Automatic Duplex Printing

You can perform the duplex printing without having to turn over the paper.

1. Open the printer driver setup window

2. Set automatic duplex printing

   Check the **Duplex Printing** check box on the **Page Setup** tab and confirm that **Automatic** is checked.

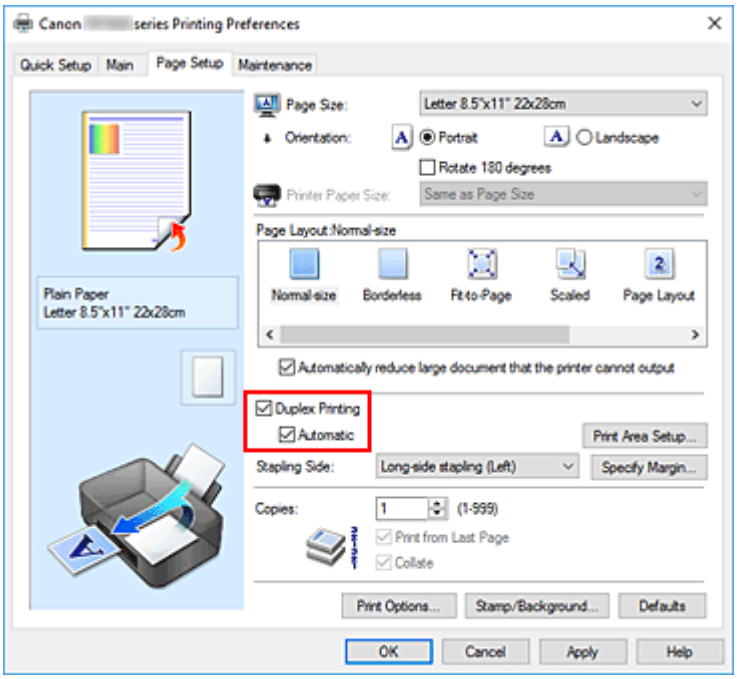

3. Select the layout

   Select **Normal-size**, **Fit-to-Page**, **Scaled**, or **Page Layout** from the **Page Layout** list.

4. Set the print area

   When you perform duplex printing, the print area of the document becomes slightly narrower than usual and the document may not fit on one page.
   Click **Print Area Setup...**, select one of the following process methods, and then click **OK**.

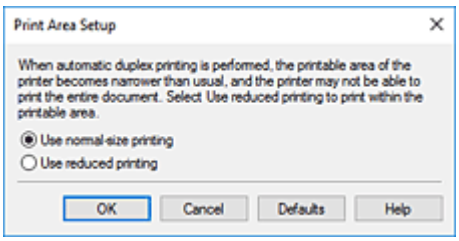

Use normal-size printing

Print without reducing the page.

Use reduced printing

Reduce the page slightly during printing.

5. Specify the side to be stapled

   The best **Stapling Side** is selected automatically from the **Orientation** and **Page Layout** settings. To change the setting, select another stapling side from the list.

6. Set the margin width

   If necessary, click **Specify Margin...** and set the margin width, and then click **OK**.

7. Complete the setup

   Click **OK** on the **Page Setup** tab.
   When you perform print, duplex printing will be started.

Performing Duplex Printing Manually

You can perform the duplex printing manually.

1. Open the printer driver setup window

2. Set duplex printing

   Check the **Duplex Printing** check box and uncheck the **Automatic** check box on the **Page Setup** tab.

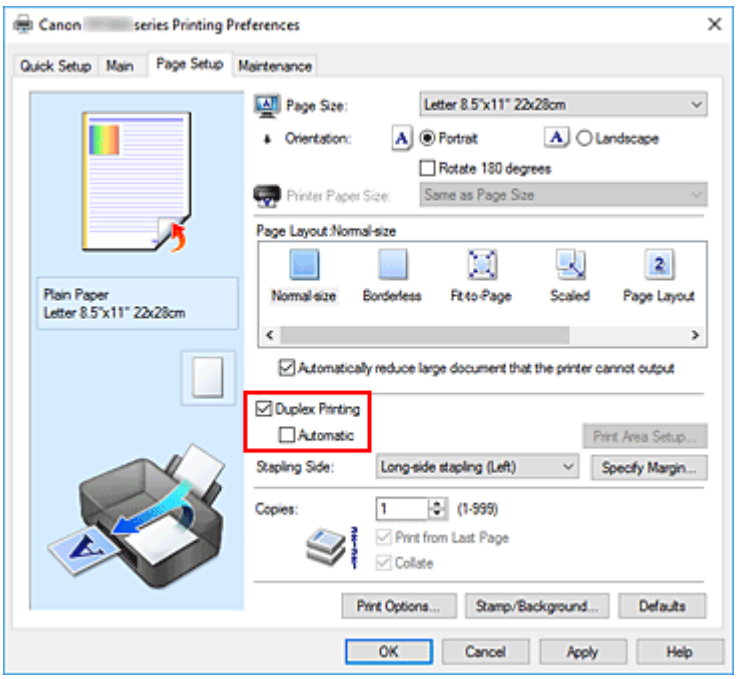

3. Select the layout

   Select **Normal-size**, **Fit-to-Page**, **Scaled**, or **Page Layout** from the **Page Layout** list.

4. Specify the side to be stapled

   The best **Stapling Side** is selected automatically from the **Orientation** and **Page Layout** settings. To change the setting, select another stapling side from the list.

5. Set the margin width

   If necessary, click **Specify Margin...** and set the margin width, and then click **OK**.

6. Complete the setup

   Click **OK** on the **Page Setup** tab.
   When you perform print, the document is first printed on one side of a sheet of paper. After one side is printed, reload the paper correctly according to the message.
   Then tap **Start print** on the printer operation panel to print the opposite side.

Important

- When a media type other than **Plain Paper** is selected from the **Media Type** list on the **Main** tab, **Duplex Printing** appears grayed out and is unavailable.
- When **Borderless**, **Tiling/Poster**, or **Booklet** is selected from the **Page Layout** list, **Duplex Printing** and **Stapling Side** appear grayed out and are unavailable.
- **Duplex Printing** can be performed only when one of the following paper sizes is selected from **Page Size** on the **Page Setup** tab.
  - **Letter 8.5"x11" 22x28cm**, **A5**, **A4**, **B5**

- After printing the front page, there is an ink drying wait time before starting to print the back page (Operation stops temporarily). Do not touch the paper during this time. You can change the ink drying wait time at **Custom Settings** in the Canon IJ Printer Assistant Tool.

Related Topic

➡ Changing the Printer Operation Mode

Setting Up Envelope Printing

1. Load envelope on the printer

2. Open the printer driver setup window

3. Select the media type

   Select **Envelope** from **Commonly Used Settings** on the **Quick Setup** tab.

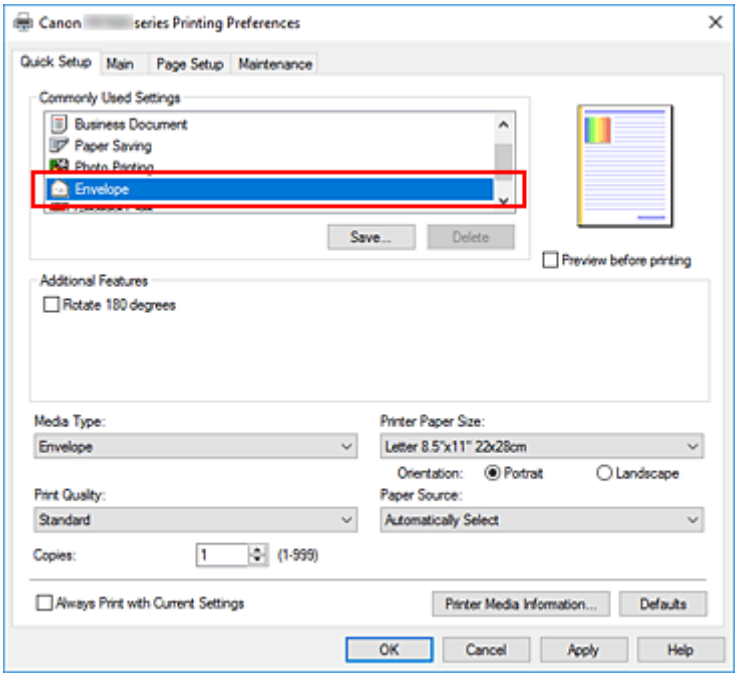

4. Select the paper size

   When the **Envelope Size Setting** dialog box is displayed, select **Yougata 4 4.13"x9.25"**, **Yougata 6 3.86"x7.48"**, **Envelope Com 10**, or **Envelope DL**, and then click **OK**.

5. Set the orientation

   To print the addressee horizontally, select **Landscape** for **Orientation**.

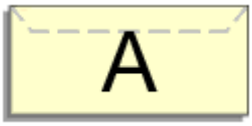

Note

- If **Envelope Com 10**, **Envelope DL**, **Yougata 4 4.13"x9.25"**, or **Yougata 6 3.86"x7.48"** is selected for **Printer Paper Size**, the printer rotates the paper 90 degrees to the left to print, regardless of the **Rotate 90 degrees left when orientation is [Landscape]** setting for **Custom Settings** in the Canon IJ Printer Assistant Tool.

6. Select the print quality

Select **High** or **Standard** that matches your purpose for **Print Quality**.

7. Click **OK**

   When you perform print, the information is printed on the envelope.

Important

- When you perform envelope printing, guide messages are displayed.
  To hide the guide messages, check the **Do not show this message again** check box.
  To show the guide again, click the **View Printer Status** button on the **Maintenance** tab, and start the Canon IJ Status Monitor.
  Then click **Envelope Printing** from **Display Guide Message** of the **Option** menu to enable the setting.

Note

- If the paper settings in the printer driver differ from the paper information registered on the printer, an error may occur. For instructions on what to do if an error occurs, see "Paper Settings."
  To check the current printer settings or to apply the printer settings to the printer driver, click **Printer Media Information...** from the **Quick Setup** tab, and specify the settings in the dialog box that appears.
  For details about the paper information to be registered on the printer, see the following:
  - Paper Settings on the Printer Driver and the Printer (Media Type)
  - Paper Settings on the Printer Driver and the Printer (Paper Size)

Printing on Postcards

1. Load postcard on the printer

2. Open the printer driver setup window

3. Select commonly used settings

   Display the **Quick Setup** tab, and for **Commonly Used Settings**, select **Standard**.

4. Select the media type

   For **Media Type**, select **Ink Jet Hagaki (A)**, **Ink Jet Hagaki**, **Hagaki K (A)**, **Hagaki K**, **Hagaki (A)**, or **Hagaki**.

   Important

   - This printer cannot print on postcards that have photos or stickers attached.
   - You will get cleaner printing if you print the message side first and then print the address side.
   - The paper settings on the printer driver are different, depending on whether you are printing on the address side or the message side.
     To check the current printer settings or to apply the printer settings to the printer driver, click **Printer Media Information...** from the **Quick Setup** tab, and specify the settings in the dialog box that appears.
     For details about the paper information to be registered to the printer driver and on the printer, see the following:
     - Paper Settings on the Printer Driver and the Printer (Media Type)
     - Paper Settings on the Printer Driver and the Printer (Paper Size)

5. Select the paper size

   For **Printer Paper Size**, select **Hagaki 100x148mm** or **Hagaki 2 200x148mm**.

   Important

   - Return postcards can be used only when you print them from the computer.
   - When printing a return postcard, always set the paper size to **Hagaki 2 200x148mm** from your application software or the printer driver.
   - Do not fold the return postcard. If a crease is formed, the printer will not be able to feed the postcard properly, and this condition will cause line shifts or a paper jam.
   - With return postcards, borderless printing cannot be used.

6. Set the print orientation

   To print the address horizontally, set **Orientation** to **Landscape**.

7. Select the print quality

   For **Print Quality**, select **High** or **Standard**, according to your purpose.

8. Click **OK**

When you perform printing, the data will be printed onto the postcard.

Important

- When printing on media other than postcards, load the media according to usage method of that media, and click **Start Printing**.

Overview of the Printer Driver

Canon IJ Printer Driver

- Opening Printer Driver's Setup Screen

Canon IJ Status Monitor

- Checking Ink Status from Your Computer

Instructions for Use (Printer Driver)

Canon IJ Printer Driver

The Canon IJ printer driver (simply called printer driver below) is software that you install onto your computer so that it can communicate with the printer.

The printer driver converts the print data created by your application software into data that your printer can understand, and sends the converted data to the printer.

Because different printers support different data formats, you need a printer driver that supports your printer.

Installing the Printer Driver

To install the printer driver, install the driver from the Setup CD-ROM or our website.

Specifying the Printer Driver

To specify the printer driver, open the **Print** dialog box of the application software you are using, and select "Canon XXX" (where "XXX" is your model name).

Displaying the Manual from the Printer Driver

To display the description of a setup tab from the printer driver's setup screen, click **Help** on that tab.

Related Topic

➡ Opening Printer Driver's Setup Screen

Opening Printer Driver's Setup Screen

You can display the printer driver's setup screen from your application software or by clicking the printer icon.

Displaying the Printer Driver's Setup Screen from Your Application Software

Perform this procedure to set up the print settings during printing.

1. Select print command from application software

   The **Print** command can generally be found in the **File** menu.

2. Select your printer model, and click **Preferences** (or **Properties**)

   The printer driver's setup screen appears.

Note

- Depending on the application software you are using, the command and menu names, and the number of steps may vary. For details, refer to the operating instructions of your application software.

Displaying the Printer Driver's Setup Screen by Clicking the Printer Icon

From the setup screen you can perform printer maintenance operations such as print head cleaning, or set print settings to be shared by all application software.

1. Select **Control Panel** -> **Hardware and Sound** -> **Devices and Printers**

2. Right-click the icon of your model. When the menu appears, select **Printing preferences**

   The printer driver's setup screen appears.

Important

- Opening the printer driver setup window through **Printer properties** displays such tabs regarding the Windows functions as the **Ports** (or **Advanced**) tab. Those tabs do not appear when opening through **Printing preferences** or application software. For tabs regarding Windows functions, refer to the user's manual for the Windows.

Canon IJ Status Monitor

The Canon IJ Status Monitor displays the printer status and the printing progress. The printer status is shown by the images, icons, and messages in the status monitor.

Launching the Canon IJ Status Monitor

The Canon IJ Status Monitor launches automatically when print data is sent to the printer. When launched, the Canon IJ Status Monitor appears as a button on the task bar.

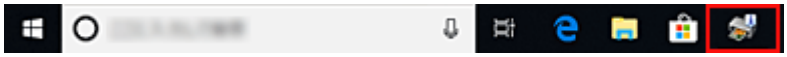

Click the button of the status monitor displayed on the task bar. The Canon IJ Status Monitor appears.

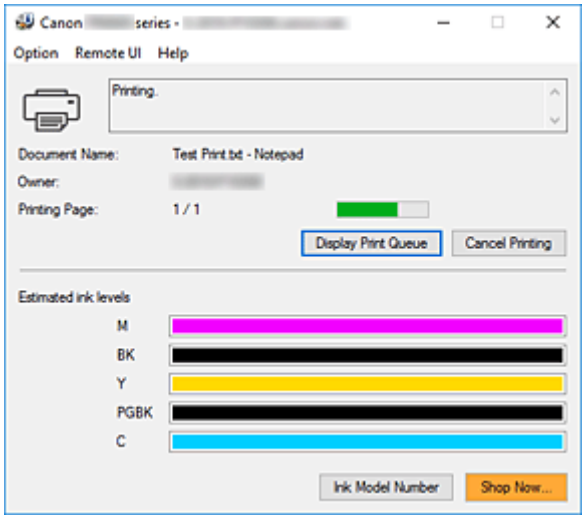

Note

- To open the Canon IJ Status Monitor when the printer is not printing, open the printer driver setup window and click **View Printer Status** on the **Maintenance** tab.
- The information displayed on the Canon IJ Status Monitor may differ depending on the country or region where you are using your printer.

When Errors Occur

The Canon IJ Status Monitor is automatically displayed if an error occurs (e.g., if the printer runs out of paper or if the ink is low).

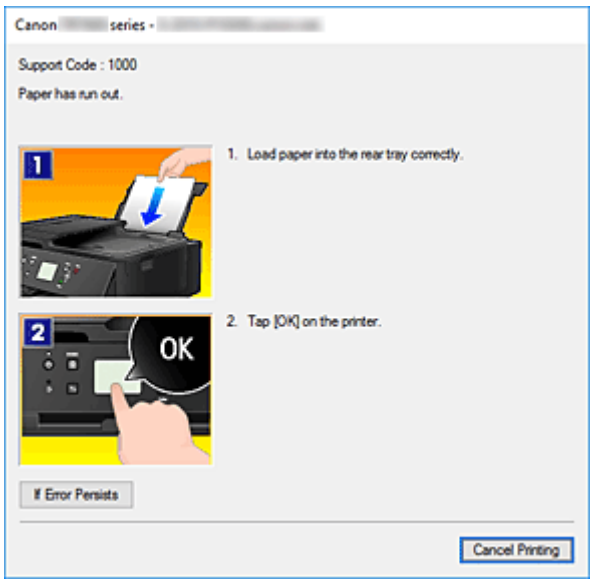

In such cases, take the appropriate action as described.

Related Topic

➡ Canon IJ Status Monitor Description

Checking Ink Status from Your Computer

You can check the remaining ink level and the ink tank types for your model.

1. Open the printer driver setup window

2. Launching the Canon IJ Status Monitor

   On the **Maintenance** tab, click **View Printer Status**.

3. Display **Estimated ink levels**

   Ink status is displayed as an illustration.

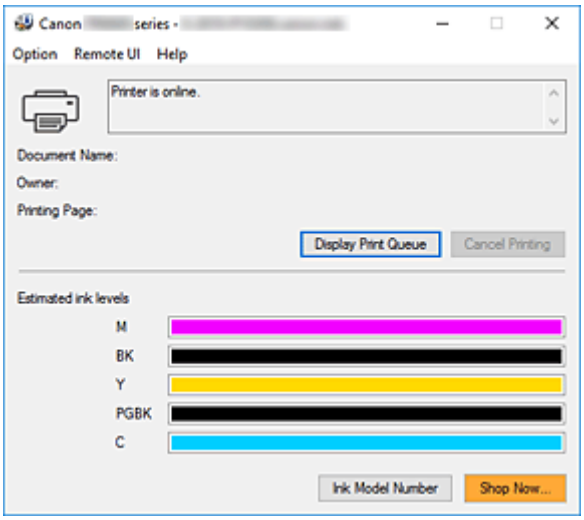

Note

- The information displayed on the Canon IJ Status Monitor may differ depending on the country or region where you are using your printer.

Instructions for Use (Printer Driver)

This printer driver is subject to the following restrictions. Keep the following points in mind when using the printer driver.

Restrictions on the Printer Driver

- Depending on the document type to be printed, the paper feed method specified in the printer driver may not operate correctly.
  If this happens, open the printer driver setup window from the **Print** dialog box of the application software, and check the setting in the **Paper Source** field on the **Main** tab.
- With some applications, the **Copies** setting in the **Page Setup** tab of the printer driver may not be enabled.
  In this case, use the copies setting in the **Print** dialog box of the application software.
- If the selected **Language** in the **About** dialog box of the **Maintenance** tab does not match the operating system interface language, the printer driver setup window may not be displayed properly.
- Do not change the **Advanced** tab items of the printer properties. If you change any of the items, you will not be able to use the following functions correctly.
  Also, if **Print to file** is selected in the **Print** dialog box of the application software and with applications that prohibit EMF spooling, such as Adobe Photoshop LE and MS Photo Editor, the following functions will not operate.
  - **Preview before printing** on the **Main** tab
  - **Prevention of Print Data Loss** in the **Print Options** dialog box on the **Page Setup** tab
  - **Page Layout**, **Tiling/Poster**, **Booklet**, **Duplex Printing**, **Specify Margin...**, **Print from Last Page**, **Collate**, and **Stamp/Background...** on the **Page Setup** tab
  - **Print a pattern for color adjustment** on the **Color Adjustment** tab in the **Manual Color Adjustment** dialog box
- Since the resolution in the preview display differs from the printing resolution, text and lines in the preview display may appear different from the actual print result.
- With some applications, the printing is divided into multiple print jobs.
  To cancel printing, delete all divided print jobs.
- If image data is not printed correctly, display the **Print Options** dialog box from the **Page Setup** tab and change the setting of **Disable ICM required from the application software**. This may solve the problem.

Points to Note About Applications with Restrictions

- There are following restrictions in Microsoft Word (Microsoft Corporation).
  - When Microsoft Word has the same printing functions as the printer driver, use Word to specify them.
  - When **Fit-to-Page**, **Scaled**, or **Page Layout** is used for **Page Layout** on the **Page Setup** tab of the printer driver, the document may not print normally in certain versions of Word.
  - When **Page Size** in Word is set to "XXX Enlarge/Reduce", the document may not print normally in certain versions of Word.
    If this happens, follow the procedure below.
    1. Open Word's **Print** dialog box.

2. Open the printer driver setup window, and on the **Page Setup** tab, set **Page Size** to the same paper size that you specified in Word.
3. Set the **Page Layout** that you want, and then click **OK** to close the window.
4. Without starting printing, close the **Print** dialog box.
5. Open Word's **Print** dialog box again.
6. Open the printer driver setup window and click **OK**.
7. Start printing.

- If bitmap printing is enabled in Adobe Illustrator (Adobe Systems Incorporated), printing may take time or some data may not be printed. Print after unchecking the **Bitmap Printing** check box in the **Print** dialog box.

Printer Driver Description

- Quick Setup Tab Description
- Main Tab Description
- Page Setup Tab Description
- Maintenance Tab Description
- Canon IJ Status Monitor Description

Quick Setup Tab Description

The **Quick Setup** tab is for registering commonly used print settings. When you select a registered setting, the printer automatically switches to the preset items.

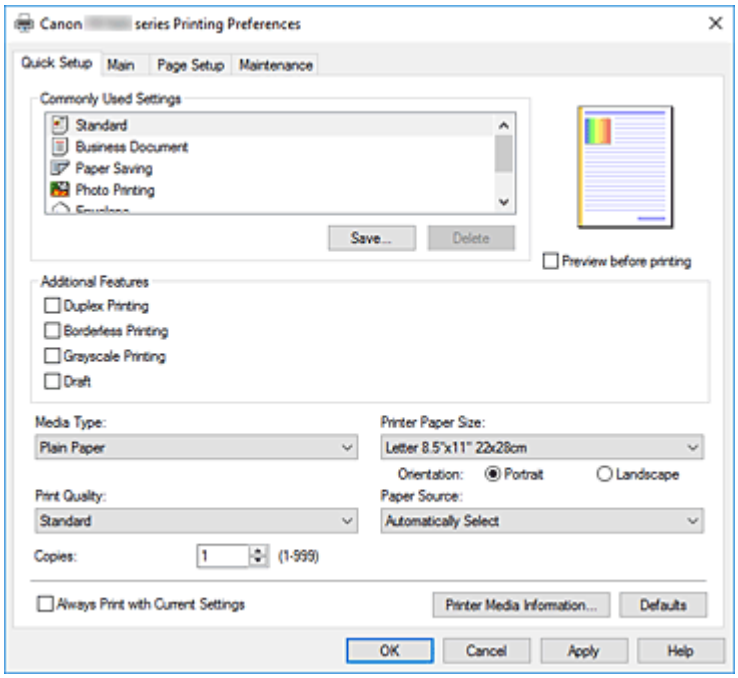

Commonly Used Settings

The names and icons of frequently used printing profiles are registered. When you select a printing profile according to the purpose of the document, settings that match the purpose are applied.
In addition, functions that are thought to be useful for the selected printing profile are displayed in **Additional Features**.
You can also change a printing profile and register it under a new name. You can delete the registered printing profile.
You can rearrange the profiles either by dragging the individual profiles or by holding down the Ctrl key and pressing the up or down arrow keys.

Standard

These are the factory settings.
If **Page Size**, **Orientation**, and **Copies** were set from the application software, those settings have priority.

Business Document

Select this setting when printing a general document.
If **Page Size**, **Orientation**, and **Copies** were set from the application software, those settings have priority.

Paper Saving

Select this setting to save paper when printing a general document. The **2-on-1 Printing** and **Duplex Printing** check boxes are checked automatically.
If **Page Size**, **Orientation**, and **Copies** were set from the application software, those settings have priority.

Photo Printing

If you select this setting when printing a photo, the photo paper and photo size generally used are set. The **Borderless Printing** check box is checked automatically.

If **Orientation** and **Copies** were set from the application software, those settings have priority.

Envelope

If you select this setting for printing an envelope, **Media Type** is set automatically to **Envelope**. In the **Envelope Size Setting** dialog box, select the size of the envelope to be used.

Greeting Card

When selected for printing a greeting card, the **Media Type** is automatically set to **Inkjet Greeting Card**. The **Print Quality** is also set to **High**, and a check-mark is added to **Borderless Printing**.

Save...

Displays the **Save Commonly Used Settings** dialog box.

Click this button when you want to save the information that you set on the **Quick Setup**, **Main**, and **Page Setup** tabs to **Commonly Used Settings**.

Delete

Deletes a registered printing profile.

Select the name of the setting to be deleted from **Commonly Used Settings**, and click **Delete**. When a confirmation message is displayed, click **OK** to delete the specified printing profile.

Note

- Printing profiles that are registered in the initial settings cannot be deleted.

Settings Preview

The paper illustration shows how the original will be laid out on a sheet of paper.

You can check an overall image of the layout.

Preview before printing

Shows what the print result will look like before you actually print the data.

Check this check box to display a preview before printing.

Uncheck this check box if you do not want to display a preview.

Additional Features

Displays the frequently used, convenient functions for the printing profile that you selected for **Commonly Used Settings** on the **Quick Setup** tab.

When you move the mouse pointer near a function that can be changed, a description of that function is displayed.

To enable a function, check the corresponding check box.

For some functions, you can set detailed settings from the **Main** and **Page Setup** tabs.

Important

- Depending on the printing profiles, certain function may be grayed out and you will not be able to change them.

2-on-1 Printing

Prints two pages of the document, side by side, on one sheet of paper.

To change the page sequence, click the **Page Setup** tab, select **Page Layout** for **Page Layout**, and click **Specify...**. Then in the **Page Layout Printing** dialog box that appears, specify the **Page Order**.

4-on-1 Printing

Prints four pages of the document, side by side, on one sheet of paper.

To change the page sequence, click the **Page Setup** tab, select **Page Layout** for **Page Layout**, and click **Specify...**. Then in the **Page Layout Printing** dialog box that appears, specify the **Page Order**.

Duplex Printing

Selects whether to print the document on both sides or one side of a sheet of paper.

To change the staple side or the margins, set the new values from the **Page Setup** tab.

Borderless Printing

Performs borderless printing without any margins on the paper.

With the borderless printing function, the document to be printed is enlarged, so that it extends slightly off the paper. In other words, the document is printed without any margin.

To adjust the amount that the document extends beyond the paper, click the **Page Setup** tab, choose **Borderless**, and enter the value in **Amount of Extension**.

Grayscale Printing

This function converts the data to monochrome data when printing your document.

Draft

This setting is appropriate for test printing.

Rotate 180 degrees

Prints the document by rotating it 180 degrees against the paper feed direction.

The width of print area and the amount of extension that are configured in other application software will be reversed vertically and horizontally.

Color/Intensity Manual Adjustment

Select when you set the **Color Correction** method and individual settings such as **Cyan**, **Magenta**, **Yellow**, **Brightness**, **Intensity**, **Contrast**, etc.

Media Type

Selects a type of printing paper.

Select a media type that matches the paper that is loaded in the printer. This ensures that printing is carried out properly for the specified paper.

Printer Paper Size

Selects the size of paper actually loaded into the printer.

Normally, the paper size is set automatically according to the output paper size setting, and the document is printed with no scaling.

When you set **2-on-1 Printing** or **4-on-1 Printing** in **Additional Features**, you can manually set the paper size with **Page Size** on the **Page Setup** tab.

If you select a paper size that is smaller than the **Page Size**, the document size will be reduced. If you select a paper size that is larger, the document size will be enlarged.

Also if you select **Custom...**, the **Custom Paper Size** dialog box opens and allows you to specify any vertical and horizontal dimensions for the paper size.

Orientation

Selects the printing orientation.

If the application used to create your document has a similar function, select the same orientation that you selected in that application.

Portrait

Prints the document so that its top and bottom positions are unchanged relative to the paper feed direction. This is the default setting.

Landscape

Prints the document by rotating it 90 degrees relative to the paper feed direction.
You can change the rotation direction by going to the Canon IJ Printer Assistant Tool, opening the **Custom Settings** dialog box, and then using **Rotate 90 degrees left when orientation is [Landscape]** check box.
To rotate the document 90 degrees to the left when printing, select the **Rotate 90 degrees left when orientation is [Landscape]** check box.

Print Quality

Selects your desired printing quality.
Select one of the following to set the print quality level that is appropriate for the purpose.
To set the print quality level individually, click the **Main** tab, and for **Print Quality**, select **Custom**.
The **Set...** becomes enabled. Click **Set...** to open the **Custom** dialog box, and then specify the desired settings.

High

Gives priority to print quality over printing speed.

Standard

Prints with average speed and quality.

Draft

This setting is appropriate for test printing.

Paper Source

Select the source from which paper is supplied.

Automatically Select

Based on the paper settings in the printer driver and the paper information registered on the printer, the printer automatically determines the paper source and feeds paper.

Rear Tray

Paper is always supplied from the rear tray.

Cassette

Paper is always supplied from the cassette.

Important

- Depending on the media type and size, the **Paper Source** settings that can be selected may differ.

Copies

Specifies the number of copies you want to print. You can specify a value from 1 to 999.

Important

- When the application software that you used to create the document has the same function, specify the settings on the printer driver. However, if the print results are not acceptable, specify the function settings on the application software.

Always Print with Current Settings

Prints documents with the current settings starting from the next print execution.
When you select this function and then close the printer driver setup window, the information that you

set on the **Quick Setup**, **Main**, and **Page Setup** tabs are saved and printing with the same settings is possible starting from the next print execution.

Important

- If you log on with a different user name, the settings that were set when this function was enabled are not reflected in the print settings.
- If a setting was specified on the application software, it has priority.

Printer Media Information...

Displays **Printer Media Information** dialog box.

You can check the printer settings and apply the checked settings to the printer driver.

Defaults

Restores all the settings you have changed to their default values.

Click this button to return all settings on the **Quick Setup**, **Main**, and **Page Setup** tabs to their default values (factory settings).

Save Commonly Used Settings dialog box

This dialog box allows you to save the information that you set on the **Quick Setup**, **Main**, and **Page Setup** tabs and add the information to the **Commonly Used Settings** list on the **Quick Setup** tab.

Name

Enter the name for the printing profile you wish to save.

Up to 255 characters can be entered.

The name appears, with its associated icon, in the **Commonly Used Settings** list on the **Quick Setup** tab.

Options...

Opens the **Save Commonly Used Settings** dialog box.

Changes the details of printing profile to be saved.

Save Commonly Used Settings dialog box

Select the icons of the printing profiles to be registered to **Commonly Used Settings**, and change the items to be saved in the printing profiles.

Icon

Select the icon for the printing profile you wish to save.

The selected icon appears, with its name, in the **Commonly Used Settings** list on the **Quick Setup** tab.

Save the paper size setting

Saves the paper size to the printing profile in **Commonly Used Settings**.

To apply the saved paper size when the printing profile is selected, check this check box.

If this check box is unchecked, the paper size is not saved, and consequently the paper size setting is not applied when the printing profile is selected. Instead the printer prints with the paper size specified with the application software.

Save the orientation setting

Saves the **Orientation** to the printing profile in **Commonly Used Settings**.

To apply the saved print orientation when the printing profile is selected, check this check box.

If this check box is unchecked, the print orientation is not saved, and consequently the **Orientation** setting is not applied when the printing profile is selected. Instead the printer prints with the print orientation specified with the application software.

Save the copies setting

Saves the **Copies** setting to the printing profile in **Commonly Used Settings**.
To apply the saved copies setting when the printing profile is selected, check this check box.
If this check box is unchecked, the copies setting is not saved, and consequently the **Copies** setting is not applied when the printing profile is selected. Instead the printer prints with the copies setting specified with the application software.

Custom Paper Size dialog box

This dialog box allows you to specify the size (width and height) of the custom paper.

Units

Select the unit for entering a user-defined paper size.

Paper Size

Specifies the **Width** and the **Height** of the custom paper. Measurement is shown according to the units specified in **Units**.

Printer Media Information dialog box

This dialog box allows you to check the printer settings and apply the checked settings to the printer driver.

Paper Source

Check the setting or select a new paper source.

Media Type

Displays the **Media Type** that is currently set on the printer.
To apply the displayed setting to the printer driver, click **Set**.

Page Size

Displays the **Page Size** that is currently set on the printer.
To apply the displayed setting to the printer driver, click **Set**.

Related Topics

- Basic Printing Setup
- Registering a Frequently Used Printing Profile
- Setting Up Envelope Printing
- Displaying the Print Results Before Printing
- Duplex Printing
- Perform Borderless Printing
- Printing a Color Document in Monochrome
- Specifying Color Correction
- Adjusting Color Balance
- Adjusting Color Balance Using Sample Patterns (Printer Driver)

- Adjusting Brightness
- Adjusting Intensity
- Adjusting Contrast
- Setting Paper Dimensions (Custom Size)
- Setting a Page Size and Orientation
- Adjusting Intensity/Contrast Using Sample Patterns (Printer Driver)
- Switching the Paper Source to Match the Purpose
- Setting the Number of Copies and Printing Order

Main Tab Description

The **Main** tab allows you to create a basic print setup in accordance with the media type. Unless special printing is required, normal printing can be performed just by setting the items on this tab.

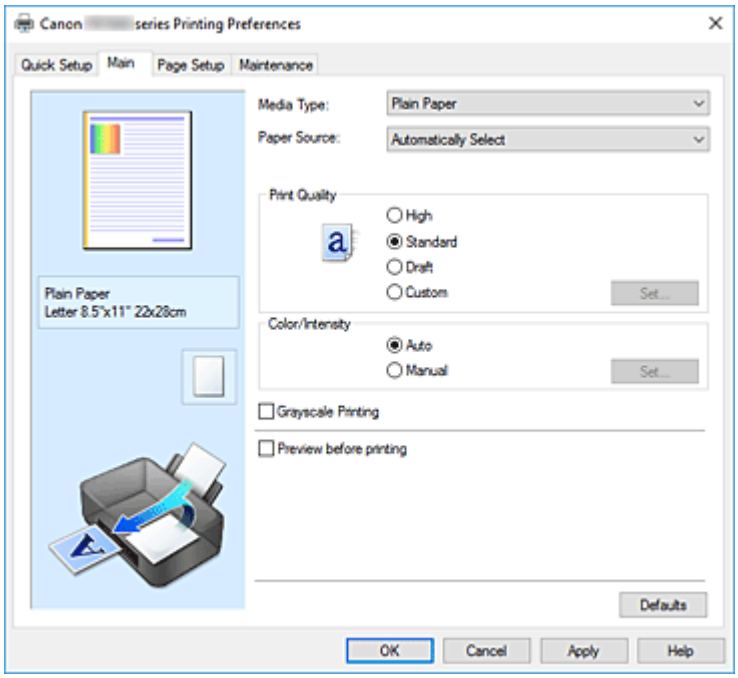

Settings Preview

The paper illustration shows how the original will be laid out on a sheet of paper.
You can check an overall image of the layout.
The printer illustration shows how to load paper to match the printer driver settings.
Check whether the printer is set up correctly by looking at the illustration before you start printing.

Media Type

Selects a type of printing paper.
Select a media type that matches the paper that is loaded in the printer. This ensures that printing is carried out properly for the specified paper.

Paper Source

Shows the source from which paper is supplied.
You may be able to switch the paper source with the printer driver.

Automatically Select

Based on the paper settings in the printer driver and the paper information registered on the printer, the printer automatically determines the paper source and feeds paper.

Rear Tray

Paper is always supplied from the rear tray.

Cassette

Paper is always supplied from the cassette.

Important

- Depending on the media type and size, the **Paper Source** settings that can be selected may differ.

Print Quality

Selects your desired printing quality.

Select one of the following to set the print quality level that is appropriate for the purpose.

Important

- Depending on the **Media Type** settings, the same print results may be produced even if the **Print Quality** is changed.

High

Gives priority to print quality over printing speed.

Standard

Prints with average speed and quality.

Draft

This setting is appropriate for test printing.

Custom

Select this when you want to set the printing quality level individually.

Set...

Select **Custom** for **Print Quality** to enable this button.

Open the **Custom** dialog box. You can then individually set the print quality level.

Color/Intensity

Selects color adjustment method.

Auto

Cyan, **Magenta**, **Yellow**, **Brightness**, **Intensity**, **Contrast**, and so on are adjusted automatically.

Manual

Select when you set the individual settings such as **Cyan**, **Magenta**, **Yellow**, **Brightness**, **Intensity**, **Contrast**, etc. and **Color Correction** method.

Set...

Select **Manual** for **Color/Intensity** to enable this button.

In the **Manual Color Adjustment** dialog box, you can adjust individual color settings such as **Cyan**, **Magenta**, **Yellow**, **Brightness**, **Intensity**, and **Contrast** on the **Color Adjustment** tab, and select the **Color Correction** method on the **Matching** tab.

Note

- If you want to use an ICC profile to adjust colors, use the **Manual Color Adjustment** dialog box to set the profile.

Grayscale Printing

This function converts the data to monochrome data when printing your document.

Check this check box to print a color document in monochrome.

Preview before printing

Shows what the print result will look like before you actually print the data.

Check this check box to display a preview before printing.

Defaults

Restores all the settings you have changed to their default values.

Clicking this button restores all the settings on the current screen to their default values (factory settings).

Custom dialog box

Set the quality level, and select the desired print quality.

Quality

You can use the slider bar to adjust the print quality level.

Important

- Certain print quality levels cannot be selected depending on the settings of **Media Type**.

Note

- The **High**, **Standard**, or **Draft** print quality modes are linked with the slider bar. Therefore when the slider bar is moved, the corresponding quality and value are displayed on the left. This is the same as when the corresponding radio button is selected for **Print Quality** on the **Main** tab.

Color Adjustment Tab

This tab allows you to adjust the color balance by changing the settings of the **Cyan**, **Magenta**, **Yellow**, **Brightness**, **Intensity**, and **Contrast** options.

Preview

Shows the effect of color adjustment.
The color and brightness change when each item is adjusted.

Note

- The graphic is in monochrome when the **Grayscale Printing** check box is checked.

View Color Pattern

Displays a pattern for checking color changes produced by color adjustment.
If you want to display the preview image with a color pattern, check this check box.

Cyan / Magenta / Yellow

Adjusts the strengths of **Cyan**, **Magenta**, and **Yellow**.
Moving the slider to the right makes a color stronger, and moving the slider to the left makes a color weaker.
You can also directly enter a value linked to the slider. Enter a value in the range from -50 to 50.
This adjustment changes the relative amount of ink of each color used, which alters the total color balance of the document. Use your application if you want to change the total color balance significantly. Use the printer driver only if you want to adjust the color balance slightly.

Important

- When **Grayscale Printing** is checked on the **Main** tab, **Cyan**, **Magenta**, and **Yellow** appear grayed out and are unavailable.

Brightness

Selects the brightness of your print.
You cannot change the levels of pure white and black. However, the brightness of the colors between white and black can be changed.

Intensity

Adjusts the overall intensity of your print.

Moving the slider to the right increases the intensity, and moving the slider to the left decreases the intensity.

You can also directly enter a value linked to the slider. Enter a value in the range from -50 to 50.

Contrast

Adjusts the contrast between light and dark in the image to be printed.

Moving the slider to the right increases the contrast, moving the slider to the left decreases the contrast.

You can also directly enter a value linked to the slider. Enter a value in the range from -50 to 50.

Print a pattern for color adjustment

When the color balance or intensity/contrast is changed, the pattern printing function prints a list of the adjustment results along with the adjustment values.

Select this function when printing a pattern for color adjustment.

Pattern Print preferences...

Check **Print a pattern for color adjustment** to enable this button.

The **Pattern Print** dialog box opens and allows you to set pattern printing settings.

Pattern Print dialog box

Performs the setup for printing of patterns that allow you to check the color balance and intensity/contrast of documents.

Parameters to Adjust

Select the item to be checked by pattern printing.

Cyan/Magenta/Yellow

Prints a pattern that allows you to check the cyan/magenta/yellow balance.

Important

- When **Grayscale Printing** is checked on the **Main** tab, **Cyan/Magenta/Yellow** appear grayed out and are unavailable.

Intensity/Contrast

Prints a pattern that allows you to check the intensity/contrast balance.

Printer Paper Size

Selects the paper size to be used for pattern printing.

This setting is linked to **Printer Paper Size** on the **Page Setup** tab.

Note

- Depending on the paper size selected on the **Page Setup** tab, there may be sizes that cannot be selected.

Amount of Pattern Instances

Sets the number of patterns to be printed.

You can select from **Largest**, **Large**, and **Small**. When you select a pattern size, the number of patterns that can be printed is as follows:

Note

- **Largest** and **Large** cannot be selected when certain paper sizes or output paper sizes are selected.
- The setting preview on the **Main** tab displays an image that allows you to check the overall layout.

Largest

Cyan/Magenta/Yellow 37
Intensity/Contrast 49

Large

Cyan/Magenta/Yellow 19
Intensity/Contrast 25

Small

Cyan/Magenta/Yellow 7
Intensity/Contrast 9

Color Variation Between Instances

Sets the amount of color change between neighboring patterns.
Select from **Large**, **Medium**, and **Small**. **Large** produces a large amount of change, and **Small** produces a small amount of change.

Note

- **Large** is about double the size of **Medium**, and **Small** is about half the size of **Medium**.

Matching Tab

Allows you to select the method for adjusting colors to match the type of document to be printed.

Color Correction

Allows you to select **Driver Matching**, **ICM**, or **None** to match the purpose of the print operation.

Important

- When **Grayscale Printing** is checked on the **Main** tab, **Color Correction** appears grayed out and is unavailable.

Driver Matching

With Canon Digital Photo Color, you can print sRGB data with color tints that most people prefer.

ICM

Adjusts the colors by using an ICC profile when printing.

Important

- If the application software is set so that ICM is disabled, **ICM** is unavailable for **Color Correction** and the printer may not be able to print the image data properly.

None

Disables color adjustment with the printer driver. Select this value when you are specifying an individually created printing ICC profile in an application software to print data.

Related Topics

- Switching the Paper Source to Match the Purpose
- Setting the Print Quality Level (Custom)
- Adjusting Color Balance
- Adjusting Brightness
- Adjusting Intensity
- Adjusting Contrast
- Adjusting Color Balance Using Sample Patterns (Printer Driver)
- Adjusting Intensity/Contrast Using Sample Patterns (Printer Driver)
- Specifying Color Correction
- Adjusting Colors with the Printer Driver
- Printing with ICC Profiles
- Printing a Color Document in Monochrome
- Displaying the Print Results Before Printing

Page Setup Tab Description

The **Page Setup** tab allows you to determine how a document is to be arranged on the paper. Also, this tab allows you to set the number of copies and the order of printing. If the application which created the document has a similar function, set them with the application.

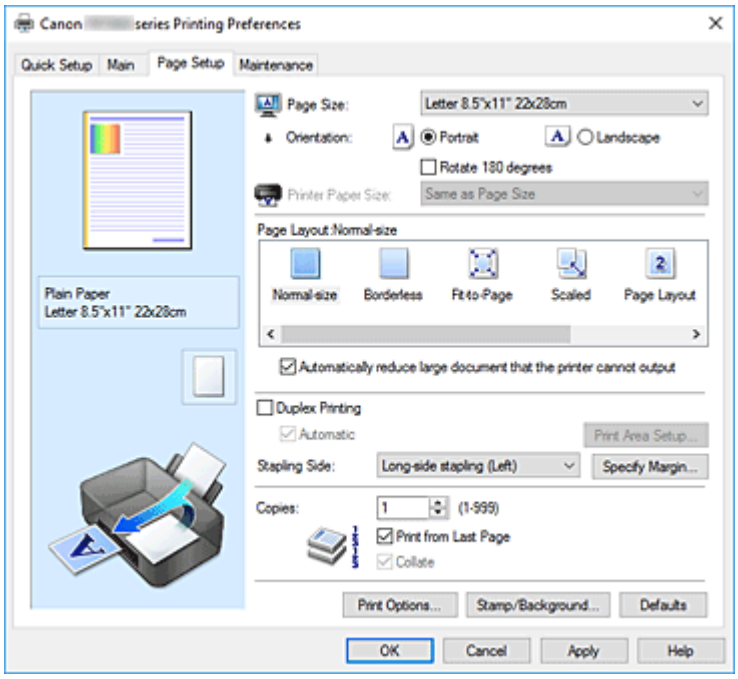

Settings Preview

The paper illustration shows how the original will be laid out on a sheet of paper.
You can check an overall image of the layout.
The printer illustration shows how to load paper to match the printer driver settings.
Check whether the printer is set up correctly by looking at the illustration before you start printing.

Page Size

Selects a page size.
Ensure that you select the same page size as you selected within the application.
If you select **Custom...**, the **Custom Paper Size** dialog box opens and allows you to specify any vertical and horizontal dimensions for the paper size.

Orientation

Selects the printing orientation.
If the application used to create your document has a similar function, select the same orientation that you selected in that application.

Portrait

Prints the document so that its top and bottom positions are unchanged relative to the paper feed direction. This is the default setting.

Landscape

Prints the document by rotating it 90 degrees relative to the paper feed direction.
You can change the rotation direction by going to the Canon IJ Printer Assistant Tool, opening the **Custom Settings** dialog box, and then using **Rotate 90 degrees left when orientation is [Landscape]** check box.

To rotate the document 90 degrees to the left when printing, select the **Rotate 90 degrees left when orientation is [Landscape]** check box.

Rotate 180 degrees

Prints the document by rotating it 180 degrees against the paper feed direction.

The width of print area and the amount of extension that are configured in other application software will be reversed vertically and horizontally.

Printer Paper Size

Selects the size of paper actually loaded into the printer.

The default setting is **Same as Page Size** to perform normal-sized printing.

You can select a printer paper size when you select **Fit-to-Page**, **Scaled**, **Page Layout**, **Tiling/Poster**, or **Booklet** for **Page Layout**.

If you select a paper size that is smaller than the **Page Size**, the document size will be reduced. If you select a paper size that is larger, the document size will be enlarged.

Also if you select **Custom...**, the **Custom Paper Size** dialog box opens and allows you to specify any vertical and horizontal dimensions for the paper size.

Page Layout

Selects the size of the document you want to print and the type of printing.

Normal-size

This is the normal printing method. Select this when you do not specify any page layout.

Automatically reduce large document that the printer cannot output

If the printer cannot print the paper size of a document, the printer can automatically reduce the size when it prints the document.

Check this check box to reduce the size when printing the document.

Borderless

Chooses whether you are printing on a full page without any page margins or printing with page margins.

In borderless printing, originals are enlarged to extend slightly off the paper. Thus, printing can be performed without any margins (border).

Use **Amount of Extension** to adjust how much of the document extends off the paper during borderless printing.

Amount of Extension

Adjusts how much of the document extends off the paper during borderless printing.

Moving the slider to the right increases the amount of extension and allows you to perform borderless printing with no problems.

Moving the slider to the left reduces the amount of extension and expands the range of the document to print.

Fit-to-Page

This function enables you to automatically enlarge or reduce documents to fit to the paper size loaded in the printer without changing the paper size you specified in your application software.

Scaled

Documents can be enlarged or reduced to be printed.

Specify the size in **Printer Paper Size**, or enter the scaling ratio in the **Scaling** box.

Scaling

Specifies an enlargement or reduction ratio for the document you want to print.

Page Layout

Multiple pages of document can be printed on one sheet of paper.

Specify...

Opens the **Page Layout Printing** dialog box.

Click this button to set details on page layout printing.

Tiling/Poster

This function enables you to enlarge the image data and divide the enlarged data into several pages to be printed. You can also glue together these sheets of paper to create large printed matter, such as a poster.

Specify...

Opens the **Tiling/Poster Printing** dialog box.

Click this button to set details on tiling/poster printing.

Booklet

The booklet printing function allows you to print data for a booklet. Data is printed on both sides of the paper. This type of printing ensures that pages can be collated properly, in page number order, when the printed sheets are folded and stapled at the center.

Specify...

Opens the **Booklet Printing** dialog box.

Click this button to set details on booklet printing.

Duplex Printing

Selects whether to print the document automatically on both sides or one side of a sheet of paper.

Check this check box to print the document on both sides.

This function can be used only when **Plain Paper** is selected for **Media Type** and one of **Normal-size**, **Fit-to-Page**, **Scaled**, or **Page Layout** is selected.

Automatic

Selects whether duplex printing is to be performed automatically or manually.

This check box will be enabled if **Booklet** is selected from the **Page Layout** list or the **Duplex Printing** check box is checked.

To perform duplex printing automatically, check this check box.

To perform duplex printing manually, uncheck this check box.

Print Area Setup...

Opens the **Print Area Setup** dialog box in which you can configure the print area for automatic duplex printing.

This button will be enabled if automatic duplex printing is set when **Borderless** is not selected.

Stapling Side

Selects the stapling margin position.

The printer analyzes the **Orientation** and **Page Layout** settings, and automatically selects the best stapling margin position. Check **Stapling Side**, and select from the list to change it.

Specify Margin...

Opens the **Specify Margin** dialog box.

You can specify the width of the margin.

Copies

Specifies the number of copies you want to print. You can specify a value from 1 to 999.

Important

- If the application used to create your document has a similar function, specify the number of copies with the application without specifying it here.

Print from Last Page

Check this check box when you want to print from the last page in order. If you do this, you do not need to sort the pages into their correct order after printing.
Uncheck this check box to print your document in normal order, starting from the first page.

Collate

Check this check box to group together the pages of each copy when you want to print multiple copies.
Uncheck this check box when you want to print with all pages of the same page number grouped together.

Important

- When the application software that you used to create the document has the same function, give priority to the printer driver settings. However, if the print results are not acceptable, specify the function settings on the application software. When you specify the number of copies and the printing order with both the application and this printer driver, the number of copies may be multiplied numbers of the two settings or the specified printing order may not be enabled.

Print Options...

Opens the **Print Options** dialog box.
Changes detailed printer driver settings for print data that is sent from applications.

Stamp/Background...

Opens the **Stamp/Background** dialog box.
The **Stamp** function allows you to print a stamp text or a bitmap over or behind document data. It also allows you to print date, time and user name. The **Background** function allows you to print a light illustration behind the document data.
Depending on the environment, **Stamp** and **Background** may not be available.

Custom Paper Size dialog box

This dialog box allows you to specify the size (width and height) of the custom paper.

Units

Select the unit for entering a user-defined paper size.

Paper Size

Specifies the **Width** and the **Height** of the custom paper. Measurement is shown according to the units specified in **Units**.

Page Layout Printing dialog box

This dialog box allows you to select the number of document pages to be placed on one sheet of paper, the page order, and whether a page border line is to be printed around each document page.
The settings specified in this dialog box can be confirmed in the settings preview on the printer driver.

Preview Icon

Shows the settings made on the **Page Layout Printing** dialog box.
You can check what the print result will look like before you actually print the data.

Page Layout

Specifies the number of document pages to fit on one sheet.

Page Order

Specifies the document orientation to be printed on a sheet of paper.

Page Border

Prints a page border line around each document page.
Check this check box to print the page border line.

Tiling/Poster Printing dialog box

This dialog box allows you to select the size of the image to be printed. You can also make settings for cut lines and paste markers which are convenient for pasting together the pages into a poster.
The settings specified in this dialog box can be confirmed in the settings preview on the printer driver.

Preview Icon

Shows the settings of the **Tiling/Poster Printing** dialog box.
You can check what the print result will look like.

Image Divisions

Select the number of divisions (vertical x horizontal).
As the number of divisions increases, the number of sheets used for printing increases. If you are pasting pages together to create a poster, increasing the number of divisions allows you to create a larger poster.

Print "Cut/Paste" in margins

Specifies whether to print the words "Cut" and "Paste" in the margins. These words serve as guidelines for pasting together the pages into a poster.
Check this check box to print the words.

Note

- Depending on the environment of the printer driver you are using, this function may not be available.

Print "Cut/Paste" lines in margins

Specifies whether to print cut lines that serve as guidelines for pasting together the pages into a poster.
Check this check box to print the cut lines.

Print page range

Specifies the printing range. Select **All** under normal circumstances.
Select **Pages** to specify a specific page or range.

Note

- If some of the pages have not been printed well, specify the pages that do not need to be printed by clicking them in the settings preview of the **Page Setup** tab. Only the pages shown on the screen will be printed this time.

Booklet Printing dialog box

This dialog box allows you to set how to bind the document as a booklet. Printing only on one side and printing a page border, can also be set in this dialog box.
The settings specified in this dialog box can be confirmed in the settings preview on the printer driver.

Preview Icon

Shows the settings made on the **Booklet Printing** dialog box.
You can check what the document will look like when printed as a booklet.

Margin for stapling

Specifies which side of the booklet is to be stapled.

Insert blank page

Selects whether to print the document on one side or both sides of the booklet.
Check this check box to print the document on one side of the booklet and select the side to be left blank from the list.

Margin

Specifies the width of the stapling margin.
The specified width becomes the stapling margin from the center of the sheet.

Page Border

Prints a page border line around each document page.
Check this check box to print the page border line.

Print Area Setup dialog box

When you perform duplex printing, the print area of the document becomes slightly narrower than usual. Therefore when a document that has small margins is printed, the document may not fit on one page. This dialog box allows you to set whether the page is to be reduced when printed so that the document fits in one page.

Use normal-size printing

Prints the document pages without reducing them. This is the default setting.

Use reduced printing

Slightly reduces each document page so that it fits on one sheet of paper during printing.
Select this setting when using automatic duplex printing to print a document with small margins.

Specify Margin dialog box

This dialog box allows you to specify the margin width for the side to be stapled. If a document does not fit on one page, the document is reduced when printed.

Margin

Specifies the width of the stapling margin.
The width of the side specified by **Stapling Side** becomes the stapling margin.

Print Options dialog box

Makes changes to print data that is sent to the printer.

Depending on the environment, this function may not be available.

Disable ICM required from the application software

Disables the ICM function required from the application software.

When an application software uses Windows ICM to print data, unexpected colors may be produced or the printing speed may decrease. If these problems occur, checking this check box may resolve the problems.

Important

- Uncheck this check box under normal circumstances.
- This function does not work when **ICM** is selected for **Color Correction** on the **Matching** tab of the **Manual Color Adjustment** dialog box.

Disable the color profile setting of the application software

Checking this check box disables information in the color profile that was set on the application software.

When the information in the color profile set on the application software is output to the printer driver, the print result may contain unexpected colors. If this happens, checking this check box may resolve the problem.

Important

- Uncheck this check box under normal circumstances.
- Even when this check box is checked, only some of the information in the color profile is disabled, and the color profile can still be used for printing.

Disable the paper source setting of the application software

Disables the paper feed method that is set by the application.

With some applications such as Microsoft Word, the data may be printed with a feed method that differs from the printer driver setting. In this case, check this function.

Important

- When this function is enabled, normally the paper feeding method cannot be changed from the Canon IJ Preview.

Ungroup Papers

Sets the display method of **Media Type**, **Page Size**, and **Printer Paper Size**.

To display the items separately, select the check box.

To display the items as a group, clear the check box.

Do not allow application software to compress print data

Compression of the application software print data is prohibited.

If the print result has missing image data or unintended colors, selecting this check box may improve the condition.

Important

- Uncheck this check box under normal circumstances.

Print after creating print data by page

The print data is created in page units, and printing starts after the processing of one page of print data is complete.

If a printed document contains unintended results such as streaks, selecting this check box may improve the results.

Important

- Uncheck this check box under normal circumstances.

Cancel the safety margin regulation for paper size

Cancels the safety margin regulation when you set **Media Type** to **Premium Fine Art Rough** on the **Main** tab.

When you check this item, the safety margin regulation is canceled, printing in a wider print area and borderless full-page printing become possible, and printing can be performed for all paper sizes.

Important

- When the safety margin regulation is canceled, the paper may become smudged or the print quality may drop depending on the paper size used and the environment.
  If that happens, we recommend that you print on a paper size that has large margins.

Prevention of Print Data Loss

You can reduce the size of the print data that was created with the application software and then print the data.

Depending on the application software being used, the image data may be cut off or may not be printed properly. In such cases, select **On**. If you will not be using this function, select **Off**.

Important

- When using this function, the print quality may drop depending on the print data.

Unit of Print Data Processing

Selects the processing unit of the print data to be sent to the printer.

Select **Recommended** under normal circumstances.

Important

- A large amount of memory may be used for certain settings.
  Do not change the setting if your computer has a small amount of memory.

Print With

Specify the ink tank to be used from the installed ink tanks.

Select from **All Colors (Default)**, **All Except PGBK (Black)**, **Only PGBK (Black)**.

Important

- When the following settings are specified, **Only PGBK (Black)** does not function because the printer uses an ink tank other than PGBK (Black) to print documents.
  - Other than **Plain Paper**, **Envelope**, **Ink Jet Hagaki (A)**, **Hagaki K (A)**, **Hagaki (A)**, or **Hagaki** is selected for **Media Type** on the **Main** tab
  - **Borderless** is selected from the **Page Layout** list on the **Page Setup** tab
- Do not detach the ink tank that is not in use. Printing cannot be performed while either ink tank is detached.

Stamp/Background dialog box

The **Stamp/Background** dialog box allows you to print a stamp and/or background over or behind the document pages. In addition to the pre-registered ones, you can register and use your original stamp or background.

Stamp

Stamp printing is a function that prints a stamp over a document.
Check this check box and select a title from the list to print a stamp.

Define Stamp...

Opens the **Stamp Settings** dialog box.
You can check the details of a selected stamp or save a new stamp.

Place stamp over text

Sets how the stamp is to be printed over the document.
Check the **Stamp** check box to enable this.
Check this check box to print a stamp over the printed document page. The printed data may be hidden behind the stamp.
Uncheck this check box to print the document data over the stamp. The printed data will not be hidden behind the stamp. However, the sections of the stamp that are overlapped by the document may be hidden.

Stamp first page only

Selects whether the stamp is to be printed on the first page only or on all pages when the document has two or more pages.
Check the **Stamp** check box to enable this.
Check this check box to print a stamp on the first page only.

Background

Background printing is a function that allows you to print an illustration or a similar object (bitmap) behind the document.
Check this check box to print a background and select a title from the list.

Select Background...

Opens the **Background Settings** dialog box.
You can register a bitmap as a background, and change layout method and intensity of the selected background.

Background first page only

Selects whether to print the background on the first page only or print on all pages when the document has two or more pages.
Check the **Background** check box to enable this.
Check this check box to print a background on the first page only.

Stamp Tab

The Stamp tab allows you to set the text and bitmap file (.bmp) to be used for a stamp.

Preview Window

Shows the status of the stamp configured in each tab.

Stamp Type

Specifies the stamp type.

Select **Text** to create a stamp with characters. Select **Bitmap** to create with a bitmap file. Select **Date/Time/User Name** to display the creation date/time and user name of the printed document.

The setting items in the **Stamp** tab change depending on the selected type.

- For **Text** registration, the characters must already be entered in **Stamp Text**. If necessary, change the **TrueType Font**, **Style**, **Size**, and **Outline** settings. You can select the color of the stamp by clicking **Select Color...**.
- For **Bitmap**, click **Select File...** and select the bitmap file (.bmp) to be used. If necessary, change the settings of the **Size** and **Transparent white area**.
- For **Date/Time/User Name**, the creation date/time and user name of the printed object are displayed in **Stamp Text**. If necessary, change the settings of **TrueType Font**, **Style**, **Size**, and **Outline**. You can select the color of the stamp by clicking **Select Color...**.

When **Stamp Type** is **Text** or **Date/Time/User Name**

Stamp Text

Specifies the stamp text string.

Up to 64 characters can be entered.

For **Date/Time/User Name**, the creation date/time and user name of the printed object are displayed in **Stamp Text**.

Important

- **Stamp Text** appears grayed out and is unavailable if **Date/Time/User Name** is selected.

TrueType Font

Selects the font for the stamp text string.

Style

Selects the font style for the stamp text string.

Size

Selects the font size for the stamp text string.

Outline

Selects a frame that encloses the stamp text string.

If a large font size is selected for **Size**, characters may extend outside of the stamp border.

Color/Select Color...

Shows the current color for the stamp.

To select a different color, click **Select Color...** to open the **Color** dialog box, and select or create a color you wish to use as a stamp.

When **Stamp Type** is **Bitmap**

File

Specifies the name of the bitmap file to be used as the stamp.

Select File...

Opens the dialog box to open a file.

Click this button to select a bitmap file to be used as a stamp.

Size

Adjusts the size of the bitmap file to be used as a stamp.

Moving the slider to the right increases the size, moving the slider to the left decreases the size.

Transparent white area

Specifies whether to make white-filled areas of the bitmap transparent.
Check this check box to make white-filled areas of the bitmap transparent.

Note

- Click **Defaults** to set **Stamp Type** to text, **Stamp Text** to blank, **TrueType Font** to Arial, **Style** to Regular, **Size** to 36 points, **Outline** unchecked, and **Color** to gray with the RGB values (192, 192, 192).

Placement Tab

The Placement tab allows you to set the position where the stamp is to be printed.

Preview Window

Shows the status of the stamp configured in each tab.

Position

Specifies the stamp position on the page.
Selecting **Custom** from the list allows you to enter values for the **X-Position** and **Y-Position** coordinates directly.
You can also change the stamp position by dragging the stamp in the preview window.

Rotation

Specifies the angle of rotation for the stamp. The angle can be set by entering the number of degrees.
Negative values rotate the stamp clockwise.

Note

- **Rotation** is enabled only when **Text** or **Date/Time/User Name** is selected for **Stamp Type** on the **Stamp** tab.

Note

- Click **Defaults** to set the stamp position to **Center** and the rotation to "0."

Save settings Tab

The **Save settings** tab allows you to register a new stamp or delete an unnecessary stamp.

Title

Enter the title to save the stamp you created.
Up to 64 characters can be entered.

Note

- Spaces, tabs, and returns cannot be entered at the beginning or end of a title.

Stamps

Shows a list of saved stamp titles.
Specify a title to display the corresponding stamp in **Title**.

Save/Save overwrite

Saves the stamp.
Enter a title in **Title**, and then click this button.

Delete

Deletes an unnecessary stamp.

Specify the title of an unnecessary stamp from the **Stamps** list, and click this button.

Background Tab

The Background tab allows you to select a bitmap file (.bmp) to be used as a background or determine how to print the selected background.

Preview Window

Shows the status of the bitmap set on the **Background** tab.

File

Specifies the name of the bitmap file to be used as the background.

Select File...

Opens the dialog box to open a file.

Click this button to select a bitmap file (.bmp) to be used as the background.

Layout Method

Specifies how the background image is to be placed on the paper.

When **Custom** is selected, you can set coordinates for **X-Position** and **Y-Position**.

You can also change the background position by dragging the image in the preview window.

Intensity

Adjusts the intensity of the bitmap to be used as a background.

Moving the slider to the right increases the intensity, and moving the slider to the left decreases the intensity. To print the background at the original bitmap intensity, move the slider to the rightmost position.

Note

- Depending on the environment, this function may not be available.
- Click **Defaults** to set **File** to blank, **Layout Method** to **Fill page**, and the **Intensity** slider to the middle.

Save settings Tab

The **Save settings** tab allows you to register a new background or delete an unnecessary background.

Title

Enter the title to save the background image you specified.

Up to 64 characters can be entered.

Note

- Spaces, tabs, and returns cannot be entered at the beginning or end of a title.

Backgrounds

Shows a list of registered background titles.

Specify a title to display the corresponding background in **Title**.

Save/Save overwrite

Saves the image data as a background.

After inserting the **Title**, click this button.

Delete

Deletes an unnecessary background.

Specify the title of an unnecessary background from the **Backgrounds** list, and then click this button.

Related Topics

- Setting Paper Dimensions (Custom Size)
- Setting a Page Size and Orientation
- Perform Borderless Printing
- Fit-to-Page Printing
- Scaled Printing
- Page Layout Printing
- Tiling/Poster Printing
- Booklet Printing
- Duplex Printing
- Setting the Stapling Margin
- Setting the Number of Copies and Printing Order
- Changing the Print Options
- Stamp/Background Printing

Maintenance Tab Description

The **Maintenance** tab allows you to start the Canon IJ Printer Assistant Tool or check the status of the printer.

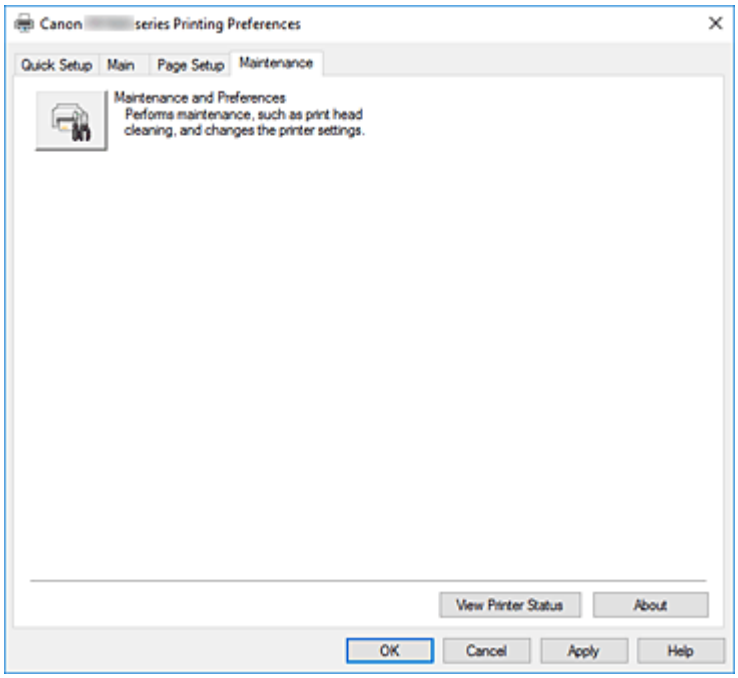

Maintenance and Preferences

Canon IJ Printer Assistant Tool is started.

You can perform printer maintenance or change the settings of the printer.

View Printer Status

Starts the Canon IJ Status Monitor.

Perform this function when you want to check the printer status and how a print job is proceeding.

About

Opens the **About** dialog box.

The version of the printer driver, plus a copyright notice, can be checked.

In addition, the language to be used can be switched.

About dialog box

When you click **About**, the **About** dialog box is displayed.

This dialog box displays the version, copyright, and module list of the printer driver. You can select the language to be used and switch the language displayed in the setup window.

Modules

Lists the printer driver modules.

Language

Specifies the language you wish to use in the printer driver setup window.

Important

- If the font for displaying the language of your choice is not installed in your system, the characters will be garbled.

Canon IJ Status Monitor Description

The Canon IJ Status Monitor displays the printer status and the printing progress. The printer status is shown by the images, icons, and messages in the status monitor.

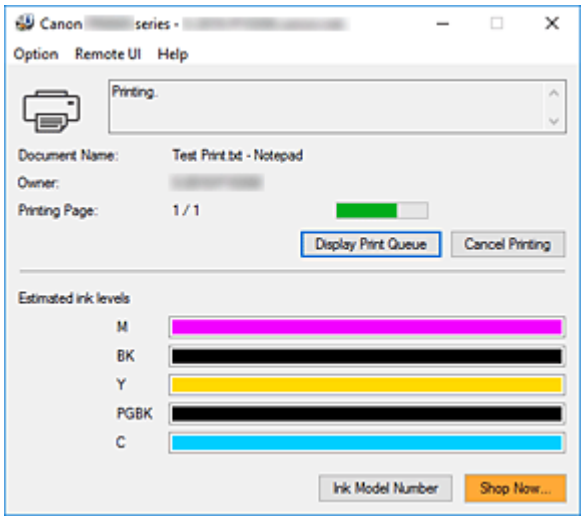

Features of the Canon IJ Status Monitor

The Canon IJ Status Monitor has the following functions:

Onscreen display of printer status

The status monitor displays the printer status in real-time.
You can check the progress of each document to be printed (print job).

Display of error content and correction procedure

The status monitor displays information on any errors that occur on the printer.
You can then immediately check what sort of action to perform.

Ink status display

Displays the ink status.
Ink tank types and ink levels can be confirmed.

Overview of the Canon IJ Status Monitor

The Canon IJ Status Monitor uses images, icons, and messages to display the printer status and the ink status.
During printing, you can check information about the document being printed and the print progress.
If an error occurs, the status monitor displays the error content and instructions on how to correct the error. Follow the message instructions.

Printer

Canon IJ Status Monitor shows an icon when a warning or error occurs to the printer.

: There is a warning.

: There has been an operator error.

: There is a notice about something other than a warning or an error.

: There has been an error which requires a service.

Document Name

Name of the document being printed.

Owner

Owner's name of the document being printed.

Printing Page

Page number of current page and the total page count.

Display Print Queue

The print queue, which controls the current document and documents waiting to be printed.

Cancel Printing

Cancels printing.

Estimated ink levels

Displays ink tank types and estimated ink levels as images.

Also, if the remaining ink is low or empty, an icon or a message will appear (Ink level warning / Ink empty error).

Move the cursor onto the image to check detailed information such as the remaining ink levels and the names of ink tanks that the printer can use.

Ink Model Number

You can look up the correct ink tank for your printer.

Option Menu

If a printer message appears, select **Enable Status Monitor** to start the Canon IJ Status Monitor.

Select **Enable Status Monitor** to use the following commands:

Always Display Current Job

Displays the Canon IJ Status Monitor whenever a document is being printed.

Always Display on Top

Displays the Canon IJ Status Monitor in front of other windows.

Display Guide Message

Displays guide messages for complicated paper setting operations.

Envelope Printing

Displays a guide message when envelope printing starts.

To hide this guide message, select the **Do not show this message again** check box.

To display the guide message again, open the **Option** menu, select **Display Guide Message**, click **Envelope Printing**, and enable this setting.

Display Warning Automatically

When a Low Ink Warning Occurs

Starts the Canon IJ Status Monitor window as a pop-up, and displays it in front of the other windows when a low ink warning occurs.

Start when Windows is Started

Automatically starts the Canon IJ Status Monitor when Windows is started.

Remote UI menu

You are able to open the printer's Remote User Interface.
You are able to check the printer status and run maintenance functions on the printer when connected to and using it through a network.

Note

- When the printer is being used via USB connection **Remote UI** will not display.

Printer Information

Allows you check detailed information, such as the printer status, the print progress, and remaining ink levels.

Maintenance

Allows you to run printer maintenance and change printer settings.

Download Security Certificate

Displays the **For secure communication** window.
This window allows you to download the route certificate, register it to the browser, and disable warning displays.

Help Menu

Select this menu to display Help information for the Canon IJ Status Monitor including version and copyright information.

Related Topic

➡ Canon IJ Status Monitor

Installing the MP Drivers

You can access our web site through the Internet and download the latest MP Drivers for your model.

1. Start the installer

   Double-click the icon of the downloaded file.
   The installation program starts.

   Important

   - A confirmation/warning dialog box may appear when starting, installing or uninstalling software. This dialog box appears when administrative rights are required to perform a task.
     When you are logged on to an administrator account, click **Yes** (or **Continue**, **Allow**) to continue.
     Some applications require an administrator account to continue. In such cases, switch to an administrator account, and restart the operation from the beginning.

2. Install the MP Drivers

   Take the appropriate action as described on the screen.

3. Complete the installation

   Click **Exit**.

Depending on the environment you are using, a message prompting you to restart the computer may be displayed. To complete the installation properly, restart the computer.

Important

- You can download the MP Drivers for free, but any Internet access charges incurred are your responsibility.

Related Topics

- Obtaining the Latest MP Drivers
- Deleting the Unnecessary MP Drivers
- Before Installing the MP Drivers

Printing from Application Software (macOS AirPrint)

- Printing Basic
- Perform Borderless Printing
- Printing on Postcards
- Adding Printer
- How to Open Printer Settings Screen
- Displaying the Printing Status Screen
- Deleting the Undesired Print Job
- Removing Printer That Is No Longer Required from List of Printers

Printing

This printer is compatible with the macOS standard printing system (AirPrint).
You can start printing right away after connecting this printer to your Mac without installing any special software.

Checking Your Environment

First, check your environment.

- AirPrint Operation Environment
  Mac running the latest version of OS
- Requirement
  The Mac and the printer must be connected by one of the following methods:
  - Connected to the same network over a **LAN**
  - Connected directly without wireless router (Direct Connection)
  - Connected by USB

Print from a Mac

1. Check that printer is turned on

   Note

   - If **Auto power on** is enabled, printer automatically turns itself on when receiving a print job.

2. Load paper in printer

3. Select paper size and paper type from printer

   Register the set paper size and paper type on the printer operation panel.
   For instructions, see "Paper Settings."

4. Start printing from your application software

   The Print dialog opens.

5. Select printer

   Select your model from the **Printer** list in the Print dialog.

Note

- Click **Show Details** to switch the setup window to the detailed display.

6. Check print settings

Set items such as **Paper Size** to the appropriate size, as well as **Feed from** and **Media Type** from **Media & Quality** of the pop-up menu.
Remove the **Two-Sided** check mark if you are not printing on both sides of the paper.

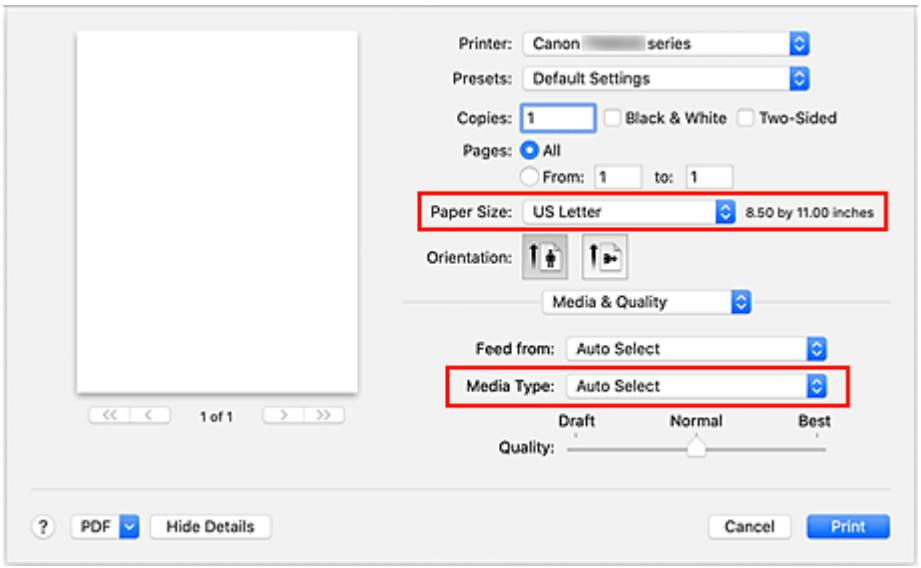

Important

- An error may occur if the paper size set in the print dialog is different from the paper size registered on the printer. Select the correct items on the print dialog and the printer that correspond to the paper being printed.
- If printing in **A4**, **A5**, **JIS B5**, or **US Letter**, set the desired feed position (**Main Tray** or **Rear Tray**) from **Feed from** of the print dialog. If **Auto Select** is selected in **Feed from**, the feed

position differs depending on **Media Type**. If **Media Type** is set to plain paper, it is fed from the cassette (main tray). If set to other types of paper, it is fed from the rear tray.
- If printing paper such as photo paper and postcards that cannot be printed on both sides, uncheck the **Two-Sided** checkbox.

Note

- Use the Print dialog to set general print settings such as the layout and the print sequence. For information about print settings, refer to macOS help.

7. Click **Print**

The printer prints according to the specified settings.

Note

- It can take the Wi-Fi a few minutes to get connected after the printer turns on. Print after checking that the printer is connected to the network.
- You cannot print if Bonjour settings of printer are disabled. Check **LAN** settings of printer and enable Bonjour settings.
- Refer to "Cannot Print Using AirPrint" for printing problems.
- The display of the settings screen may differ depending on the application software you are using.
- If you print with **Media Type** set to **Premium Fine Art Rough**, the paper may get rubbed, reducing the print quality at the top and bottom edges. When creating print data with the application software, we recommend that you create 35 mm margins on the top and bottom edges.

Printing of Envelopes

For printing on the envelope from Mac, refer to the following.

Print result image	Orientation of print data	Orientation of loading envelope
	The print data is rotated by 180 degrees against the print result image.	Load the envelope in vertically with the address side facing up so that the folded flap of the envelope will be faced down on the right side.

Perform Borderless Printing

The borderless printing function allows you to print data without any margin by enlarging the data so that it extends slightly off the paper. In standard printing, margins are created around the document area. However, in borderless printing function, these margins are not created. When you want to print data such as a photo without providing any margin around it, set borderless printing.

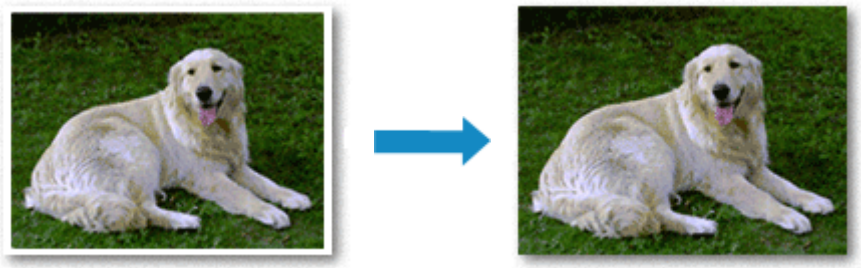

The procedure for performing borderless printing is as follows:

Setting Borderless Printing

1. Set the **Amount of extension** on the printer operation panel

   For information on how to set the amount of extension, see "Print settings."

   Important

   - When the **Extended amount: Large** is set, the back side of the paper may become smudged.

2. Select sheet size for borderless printing

   Select **XXX Borderless** for **Paper Size** from the print dialog.

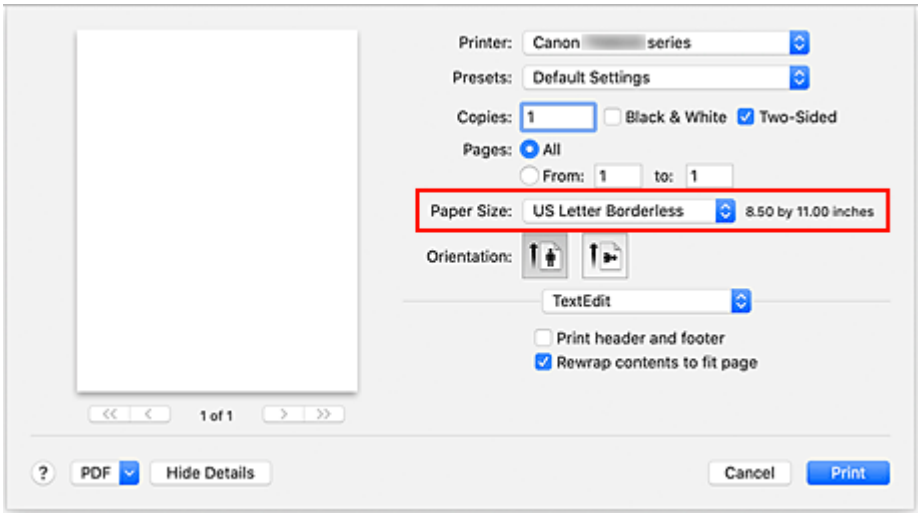

3. Click **Print**

   When you perform print, the data is printed without any margins on the paper.

Important

- Borderless printing only supports specific paper sizes. Make sure to select a paper size with the wording "Borderless" from the **Paper Size**.
- Print quality may deteriorate or the sheet may be stained at the top and bottom depending on the type of paper used.
- When the ratio of the height to the width differs from the image data, a portion of the image may not be printed depending on the size of the media used.
  In this case, crop the image data with an application software according to the paper size.
- When scaled printing or page layout printing is enabled, you cannot perform borderless printing.

Note

- The use of borderless printing is not recommended if **Plain Paper** is selected for **Media Type** in **Media & Quality**.

Expanding the Range of the Document to Print

Setting a large amount of extension allows you to perform borderless printing with no problems. However, the portion of the document extending off the paper range will not be printed and for this reason, the subjects around the perimeter of a photo may not be printed.

If you are not satisfied with the borderless printing results, reduce the amount of extension in printer operation panel.

Important

- When the amount of extension is decreased, an unexpected margin may be produced on the print, depending on the size of the paper.

Note

- When the **Amount: Minimum** is set, image data will be printed in the full size. If you set this when printing the address side of a postcard, the postal code of the sender is printed in the correct position.

Printing on Postcards

This section describes the procedure for printing on postcards.

1. Load postcards in printer

2. Select paper size and paper type from the printer

   Register **Hagaki** for paper size from the printer operation panel.
   Also, register **Ink Jet Hagaki**, **Hagaki K**, or **Hagaki** for paper type, according to your purpose. When you print on the address side, register **Hagaki**.

3. Select **Paper Size** and **Media Type** from the print dialog

   Select **Postcard** or **Postcard Borderless** for **Paper Size** from the print dialog. When you print on the address side, select **Postcard**.
   Select **Hagaki**, **Hagaki (A)**, **Hagaki K**, **Hagaki K (A)**, **Ink Jet Hagaki**, **Ink Jet Hagaki (A)**, for **Media Type** from the print dialog.

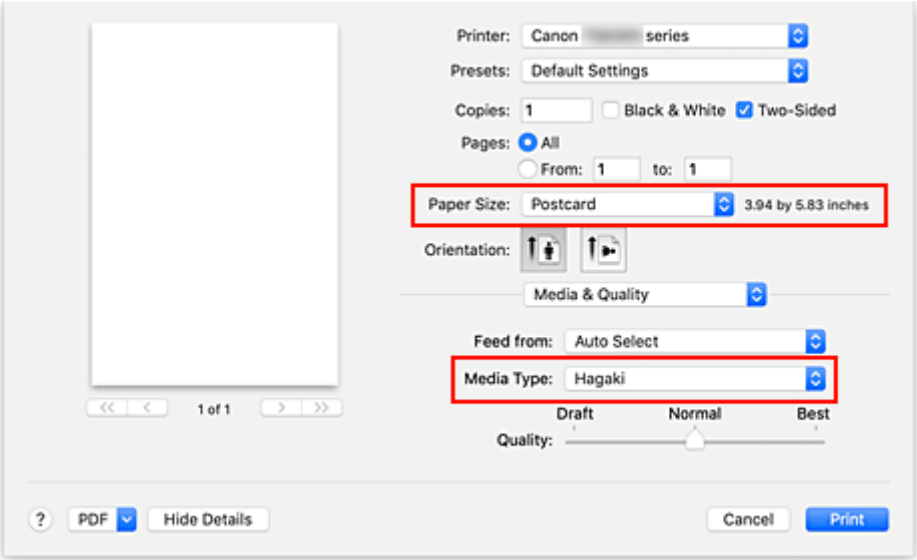

Important

- This printer cannot print on postcards that have photos or stickers attached.

4. Uncheck **Two-Sided**

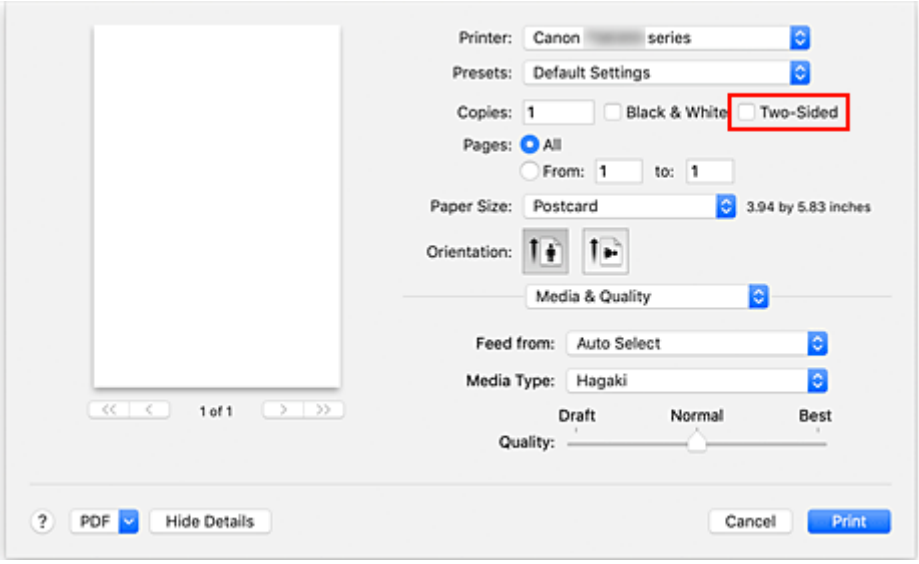

Important

- Two-sided printing is not possible for postcards, so remove the **Two-Sided** check mark. If you print with the **Two-Sided** check mark on, the printing result may not be as you intended.
- You will get cleaner printing if you print the message side first and then print the address side.

5. Click **Print**

The printer prints according to the specified settings.

Adding Printer

Procedure for adding printer to your Mac is explained.

To re-add a printer that was deleted, open **System Preferences** -> **Printers & Scanners**, click **+** next to the printer list, and then perform the procedure described below.

If your printer is connected via USB, and you connect the USB cable to a Mac, the printer is automatically added. The below procedure is not necessary in this case.

1. Check whether **Default** is selected in the displayed dialog

   Note

   - It may take a little time for the name of your printer to appear.

2. Select the printer

   Select the printer listed as **Bonjour Multifunction**.

   Note

   - Check the following if printer does not appear.
     - Printer is on
     - Firewall function of the security software is off
     - Printer is either connected to the wireless router or directly connected to the PC (Direct Connection)

3. Select **Secure AirPrint** from **Use**

4. Click **Add**

   The printer is added to your Mac.

How to Open Printer Settings Screen

The settings screen of the printer can be displayed from your application software.

Opening the Page Setup Dialog

Use this procedure to set the page (paper) settings before printing.

1. Select **Page Setup...** from the **File** menu of the application software

   The Page Setup dialog opens.

Opening the Print Dialog

Use this procedure to set the print settings before printing.

1. Select **Print...** from the **File** menu of the application software

   The Print dialog opens.

Displaying the Printing Status Screen

Check the print progress according to the following procedure:

1. Launch the printing status screen

   - If the print data has been sent to the printer

     The printing status screen opens automatically. To display the printing status screen, click the (the printer icon) displayed on the Dock.

   - If the print data has not been sent to the printer

     Open **System Preferences**, and select **Printers & Scanners**.

     To display the printing status screen, select the name of your printer model from the printer list, and then click **Open Print Queue...**.

2. Check the printing status

   You can check the name of the file being printed or ready for being printed.

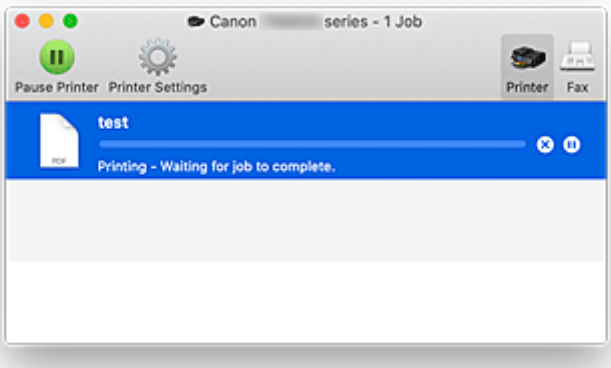

Deletes the specified print job.

Stops printing the specified document.

Resumes printing the specified document.

Stops printing all documents.

Displayed only when printing of all documents is being stopped, and resumes printing all documents.

Important

- If an error occurs, an error message will appear on the printing progress confirmation screen.
- The content of the error message may differ depending on the OS version.
- The printer part names in the error message may differ from what is listed in this manual.
- If the content of the error message is difficult to understand, check the error message displayed on the printer operation panel.

Deleting the Undesired Print Job

If the printer does not start printing, canceled or failed print job data may be remaining.
Delete unnecessary print jobs from the print status check screen.

1. Open **System Preferences**, and select **Printers & Scanners**

2. Select your model, and then click **Open Print Queue...**

   The print status check screen appears.

3. Select the unnecessary print job and click (Delete)

   The selected print jobs will be deleted.

Removing Printer That Is No Longer Required from List of Printers

The printer that is no longer in use can be removed from the list of printers.
Before removing the printer, remove the cable connecting the printer and PC.

You cannot remove the printer if not logged in as the administrator. For information about an administrative user, see **Users & Groups** from **System Preferences**.

1. Open **System Preferences**, and select **Printers & Scanners**

2. Delete printer from list of printers

   Select the printer you wish to remove from the list of printers and click **-**.

   Click **Delete Printer** when the confirmation message appears.

Paper Settings

By registering the paper size and the media type loaded on the rear tray or in the cassette, you can prevent the printer from misprinting by displaying the message before printing starts when the paper size or the media type of the loaded paper differs from the print settings.

After loading paper:

- **When you close the feed slot cover:**

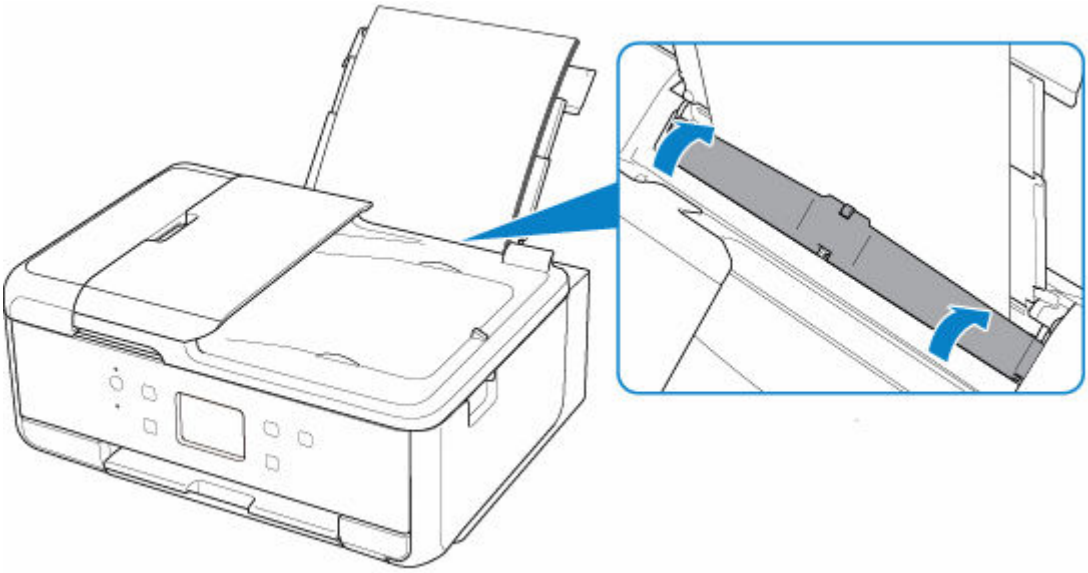

The screen to register the rear tray paper information is displayed.

If the page size on the touch screen matches the size of the paper loaded in the rear tray, select **Yes**.

If not, select **Change** to change the setting in accordance with the size of the loaded paper.

- **When you insert the cassette:**

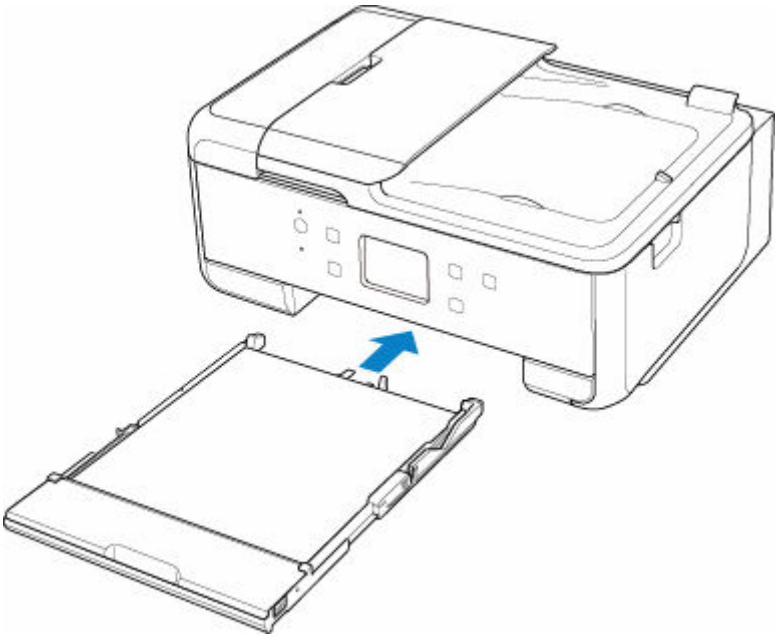

The screen to register the cassette paper information is displayed.

If the page size on the touch screen matches the size of the paper loaded in the cassette, select **Yes**.

If not, select **Change** to change the setting in accordance with the size of the loaded paper.

* You can load only plain paper in the cassette.

Important

- For more on the proper combination of paper settings you can specify by the printer driver (Windows) or on the touch screen:

  ➡ Paper Settings on the Printer Driver and the Printer (Media Type)
  ➡ Paper Settings on the Printer Driver and the Printer (Paper Size)

When the paper settings for printing/copying are different from the paper information registered to the printer:

Ex:

- Paper settings for printing/copying: A5
- Paper information registered to the printer: A4

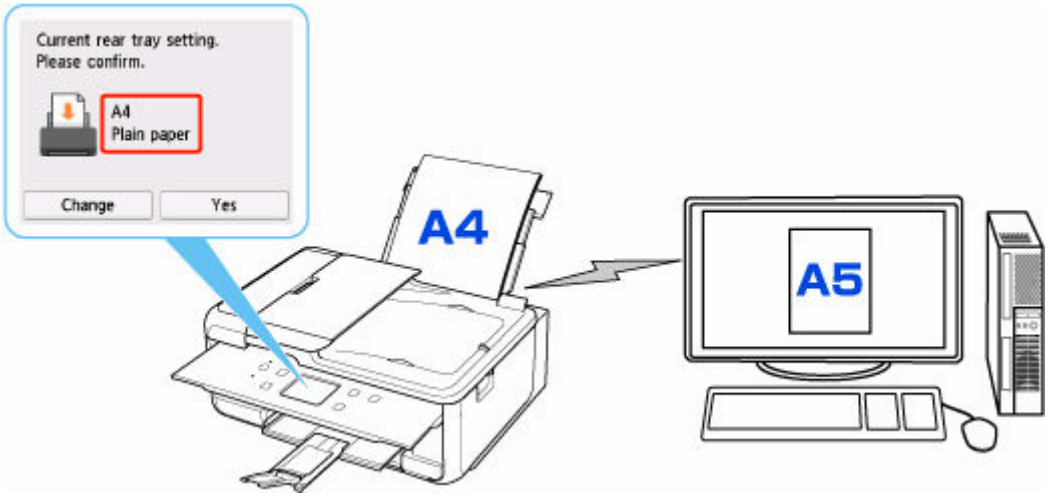

When you start printing/copying, a message is displayed and the paper setting specified for printing/copying is shown under the message.

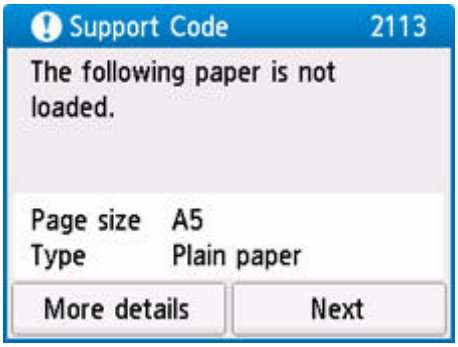

Check the message and select **Next**. When the screen to select the operation is displayed, select one of the operations below.

Note

- Depending on the setting, the choices below may not be displayed.

Print with the loaded paper.

Select if you want to print/copy on the paper loaded without changing the paper settings.

For example, when the paper setting for printing/copying is A5 and the paper information registered to the printer is A4, the printer starts printing/copying on the paper loaded in the rear tray or in the cassette without changing the paper size setting for printing/copying.

Replace the paper and print

Select if you want to print after replacing the paper of the rear tray or the cassette.

For example, when the paper size setting for printing/copying is A5 and the paper information registered to the printer is A4, you load A5 sized paper in the rear tray or in the cassette before you start printing/copying.

The paper information registration screen is displayed after replacing the paper. Register the paper information according to the paper that you loaded.

Note

- If you do not know what paper information to register to the printer, press the **Back** button when the screen to select the operation is displayed.

- For more on the proper combination of paper settings you can specify by the printer driver (Windows) or on the touch screen:

  ➡ Paper Settings on the Printer Driver and the Printer (Media Type)
  ➡ Paper Settings on the Printer Driver and the Printer (Paper Size)

Cancel

Cancels printing.

Select when you change the paper settings specified for printing/copying. Change the paper settings and try printing/copying again.

Default Setting for Displaying the Message which Prevents Misprinting

- **When you print from Windows:**

  The message which prevents misprinting is disabled by default.

  To change the setting:

  ➡ Changing the Printer Operation Mode

- **When you print from macOS:**

  The message which prevents misprinting is enabled by default.

  To change the setting:

  ➡ Changing the Printer Operation Mode

Important

- When the message which prevents misprinting is disabled:

  The printer starts printing/copying even though the paper settings for printing/copying and the paper information registered to the printer are different.

Copying

Making Copies Basics

Reducing/Enlarging Copies

Two-Sided Copying

Collated Copying

Special Copy Menu

Making Copies

This section describes the procedure to copy with **Standard copy**.

1. Check that printer is turned on.

2. Load paper.

3. Select **Copy** on the HOME screen.

   ➡ Using Touch Screen

4. Select **Standard copy**.

   The Copy standby screen is displayed.

5. Load original on platen or in ADF (Auto Document Feeder).

6. Specify settings as necessary.

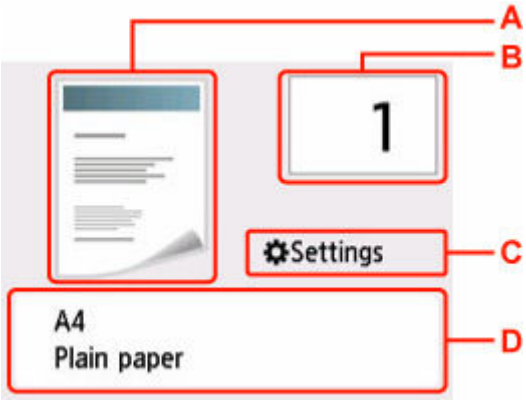

A: The scanning method and copy layout are displayed.

Switch the scanning method from the ADF and layout (single-sided/two-sided).

B: Specify the number of copies.

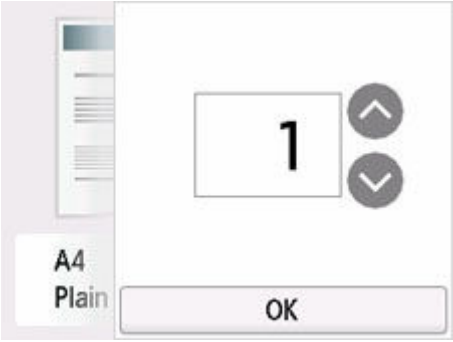

Tap or to specify the number of copies.

If you keep touching here, the number scrolls by 10.

You can also flick the number to specify.

C: Display the print setting items.

For more on the setting items:

➡ Setting Items for Copying

D: Specify the page size and the media type.

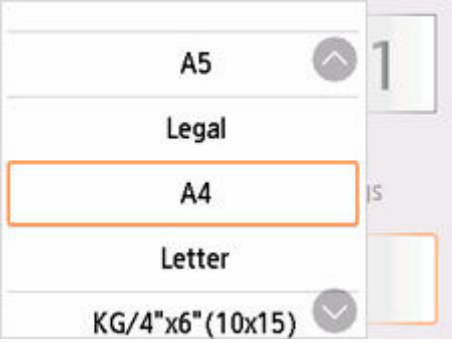

7. Press **Black** button or **Color** button.

The printer starts copying.

Remove the original on the platen or from the document output slot after copying is complete.

Important

- Do not open the document cover or remove the original from the platen until scanning is completed.
- If you load the original in the ADF, do not move the original until copying is complete.

Note

- To cancel copying, press the **Stop** button.

Adding Copying Job (Reserve copy)

If you load the original on the platen, you can add the copying job while printing (Reserve copy).

The screen below is displayed when you can add the copying job.

Load the original on the platen and press the same button (**Color** button or **Black** button) as the one which you previously pressed.

Important

- When you load the original on the platen, move the document cover gently.

Note

- When **Print qlty** (print quality) is set **High**, you cannot add the copying job.
- When you add the copying job, the number of copies or the settings such as the page size or media type cannot be changed.
- If you press the **Stop** button while reserve copying is in progress, the screen to select the method to cancel copying is displayed. If you select **Cancel all reservations**, you can cancel copying all scanned data. If you select **Cancel the last reservation**, you can cancel the last copying job.
- If you set a document of too many pages to add the copying job, **Cannot add more copy jobs. Please wait a while and redo the operation.** may appear on the touch screen. Select **OK** and wait a while, and then try copying again.
- If **Failed to reserve the copy job. Start over from the beginning.** appears on the touch screen when scanning, select **OK** and press the **Stop** button to cancel copying. After that, copy the documents that have not been finished copying.

Setting Items for Copying

You can change the copy settings such as magnification and intensity.

Print Settings Screen

Note

- For more on the print settings screen or the setting item for **Photo copy**, see Copying Photos.

The following screen is displayed by selecting **Settings** in the Copy standby screen.

Example in **Standard copy**:

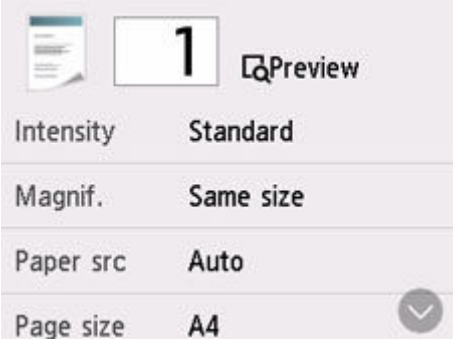

Preview

When **Preview** is displayed on the print settings screen, selecting **Preview** allows you to preview an image of the printout on the preview screen.

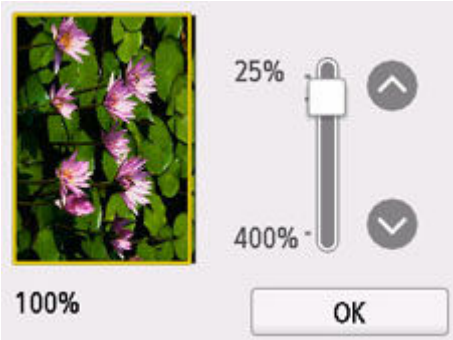

For details, see below.

➡ Displaying Preview Screen

Setting Items

Flick to display setting items and select the setting item to display the settings. Select to specify the setting.

Note

- Depending on the copy menu, some setting items cannot be selected. This section describes the setting items in **Standard copy**.

The setting item which cannot be selected is displayed grayed out.

For more on the setting items for **Photo copy**, see Copying Photos.

- Some settings cannot be specified in combination with the setting of other setting item or the copy menu. If the setting which cannot be specified in combination is selected, appears on the touch screen. In this case, select on the upper left on the touch screen to check the message and change the setting.
- The settings of the page size, media type, etc. are retained even if the printer is turned off.
- When copying starts in the copy menu that is not available with the specified setting, **The specified function is not available with current settings.** is displayed on the touch screen. Change the setting, following the on-screen instructions.

Following setting items can be changed.

- **Intensity**

  Specify the intensity.

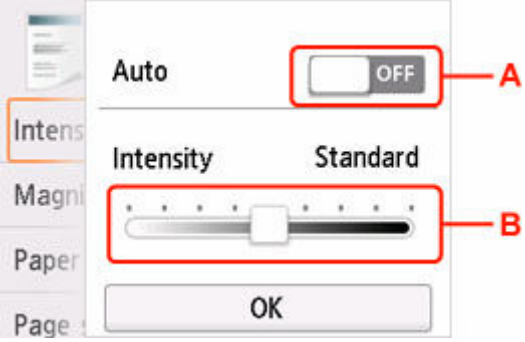

  A: Select to activate/deactivate automatic intensity adjustment.

  When **ON** is selected, the intensity is adjusted automatically according to the originals loaded on the platen.

  B: Drag to specify the intensity.

  Note

  - When you select **ON** in the automatic intensity adjustment, the loading documents cannot be loaded in the ADF (Auto Document Feeder).

- **Magnif.** (Magnification)

  Specify the reduction/enlargement method.

  ➡ Reducing/Enlarging Copies

- **Paper src**

  Select a paper source (**Rear tray**/**Cassette**/**Auto**) where paper is loaded.

  Note

  - When **Auto** is selected, paper is fed from the paper source where the paper that matches the paper settings (page size and media type) is loaded.

- **Page size**

Select the page size of the loaded paper.

- **Type** (Media type)

  Select the media type of the loaded paper.

- **Print qlty** (Print quality)

  Adjust print quality according to the original.

  Important

  - If you use **Draft** with **Type** set to **Plain paper** and the quality is not as good as expected, select **Standard** or **High** for **Print qlty** and try copying again.
  - Select **High** for **Print qlty** to copy in grayscale. Grayscale renders tones in a range of grays instead of black or white.

- **Layout**

  Select the layout.

  ➡ Copying Two Pages onto Single Page
  ➡ Copying Four Pages onto Single Page

- **ADF duplex scan**

  Select whether to perform duplex scanning from the ADF.

  ➡ Two-Sided Copying

- **2-sidedPrintSetting**

  Select whether to perform two-sided copying.

  ➡ Two-Sided Copying

- **Collate**

  Select whether to obtain sorted printouts when making multiple copies of a multi-paged original.

  ➡ Collated Copying

Scanning

Scanning from Computer (Windows)

Scanning from Computer (macOS)

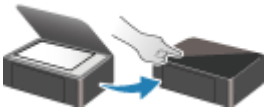

Scanning from Operation Panel

Scanning from Computer (Windows)

- **Scanning According to Item Type or Purpose (IJ Scan Utility)**
  - IJ Scan Utility Features
  - Scanning Easily (Auto Scan) **Basics**
  - Scanning Documents and Photos
  - Creating/Editing PDF Files
    - Setting Passwords for PDF Files
    - Editing Password-Protected PDF Files
- **Scanning Using Application Software (ScanGear)**
- **Scanning Tips**
  - Positioning Originals (Scanning from Computer)
  - Network Scan Settings
    - IJ Network Scanner Selector EX2 Menu and Setting Screen

Scanning According to Item Type or Purpose (IJ Scan Utility)

- **IJ Scan Utility Features**
- **Scanning Easily (Auto Scan)** Basics
- **Scanning Documents and Photos**
- **Creating/Editing PDF Files**
  - Setting Passwords for PDF Files
  - Editing Password-Protected PDF Files

IJ Scan Utility Features

Use IJ Scan Utility to scan and save documents, photos, or other items at one time by simply clicking the corresponding icon.

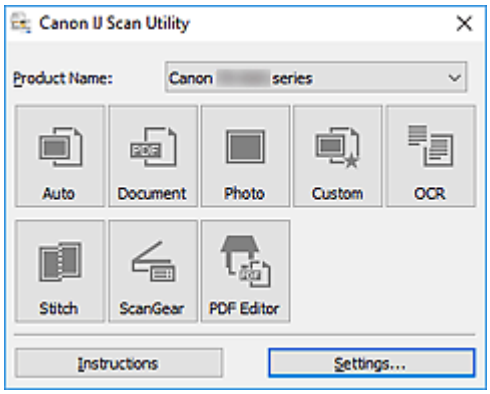

Multiple Scanning Modes

Auto allows for one click scanning with default settings for various items. **Document** will sharpen text in a document or magazine for better readability, and **Photo** is best suited for scanning photos.

Note

- For details on the IJ Scan Utility main screen, see IJ Scan Utility Main Screen.

Save Scanned Images Automatically

Scanned images are automatically saved to a preset folder. The folder can be changed as needed.

Note

- The default save folders are as follows.
  - **Windows 10/Windows 8.1:**

    Documents folder
  - **Windows 7:**

    My Documents folder
- To change folder, see Settings Dialog Box.

Application Integration

Scanned images can be sent to other applications. For example, display scanned images in your favorite graphics application, attach them to e-mails, or extract text from images.

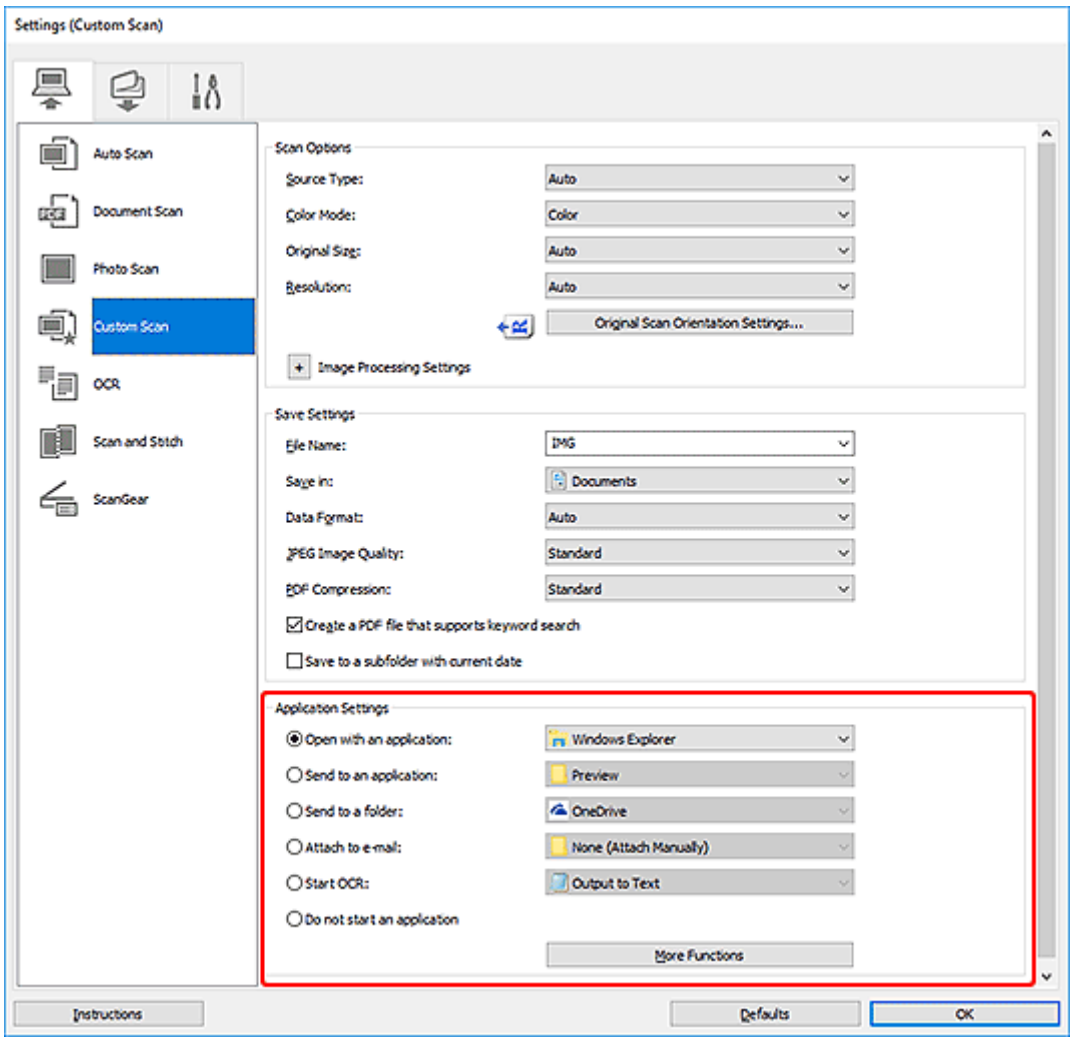

Note

- To set the applications to integrate with, see Settings Dialog Box.

Scanning Easily (Auto Scan)

Auto Scan allows for automatic detection of the type of the item placed on the platen or ADF (Auto Document Feeder).

Important

- The following types of items may not be scanned correctly. In that case, adjust the cropping frames (scan areas) in whole image view of ScanGear (scanner driver), and then scan again.
  - Photos with a whitish background
  - Items printed on white paper, hand-written text, business cards, and other unclear items
  - Thin items
  - Thick items
- When scanning two or more documents from the ADF, place documents of the same size.

1. Make sure scanner or printer is turned on.

2. Place items on platen or ADF.

   ➡ Positioning Originals (Scanning from Computer)

3. Start IJ Scan Utility.

4. Click **Auto**.

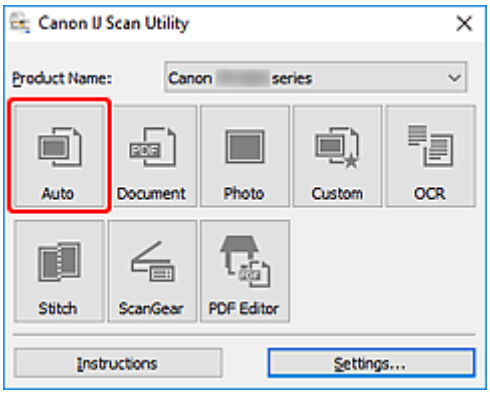

   Scanning starts.

Note

- To cancel the scan, click **Cancel**.
- Use the **Settings (Auto Scan)** dialog box to set where to save the scanned images and to make advanced scan settings.
- To scan a specific item type, see the following pages.

  ➡ Scanning Documents and Photos
  ➡ Scanning with Favorite Settings
  ➡ Scanning Multiple Documents at One Time from the ADF (Auto Document Feeder)

Scanning Documents and Photos

Scan items placed on the platen with settings suitable for documents or photos.

Save documents in formats such as PDF and JPEG, and photos in formats such as JPEG and TIFF.

1. Place the item on the platen.

   ➡ Positioning Originals (Scanning from Computer)

2. Start IJ Scan Utility.

3. To specify the paper size, resolution, PDF settings, etc., click **Settings...**, and then set each item in the Settings dialog box.

   Note

   - Once settings are made in the Settings dialog box, the same settings can be used for scanning from the next time.
   - In the Settings dialog box, specify image processing settings such as slant correction and outline emphasis, set the destination of the scanned images, and more, as needed.

   When setting is completed, click **OK**.

4. Click **Document** or **Photo**.

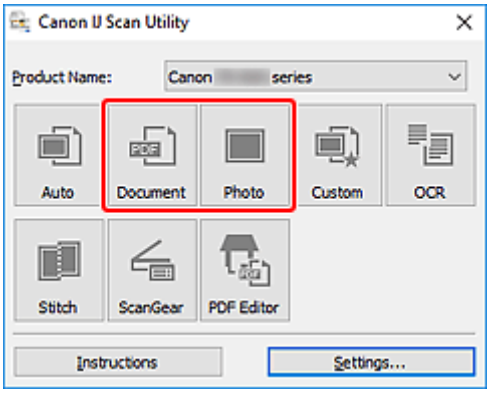

   Scanning starts.

Note

- To cancel the scan, click **Cancel**.

Creating/Editing PDF Files

You can create PDF files by scanning items placed on the platen or ADF (Auto Document Feeder). Add, delete, rearrange pages or make other edits in the created PDF files.

Important

- You can create or edit up to 100 pages of a PDF file at one time.
- Only PDF files created or edited in IJ Scan Utility or IJ PDF Editor are supported. PDF files created or edited in other applications are not supported.

Note

- You can also create PDF files from images saved on a computer.
- Selectable file formats are PDF, JPEG, TIFF, and PNG.
- Images whose number of pixels in the vertical or horizontal direction is 10501 or more cannot be used.
- When you select a password-protected PDF file, you must enter the password.

  ➡ Editing Password-Protected PDF Files

1. Place items on platen or ADF.

2. Start IJ Scan Utility.

3. Click **PDF Editor**.

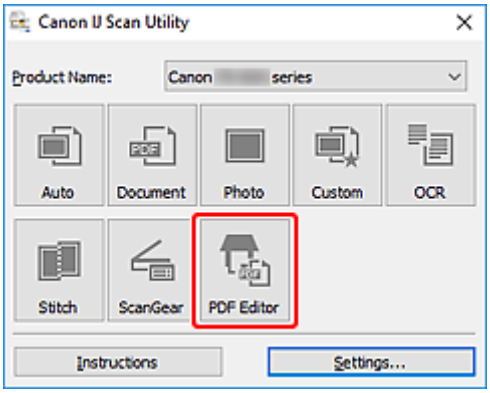

IJ PDF Editor starts.

4. To specify paper size, resolution, and other settings, click **Settings...** from the **File** menu, and then set each item in the Settings (Document Scan) dialog box.

   ### Note

   - Once settings are made in the Settings dialog box, the same settings can be used for scanning from the next time.
   - In the Settings dialog box, specify image processing settings such as slant correction and outline emphasis.

   When setting is completed, click **OK**.

5. Click (Scan) on Toolbar.

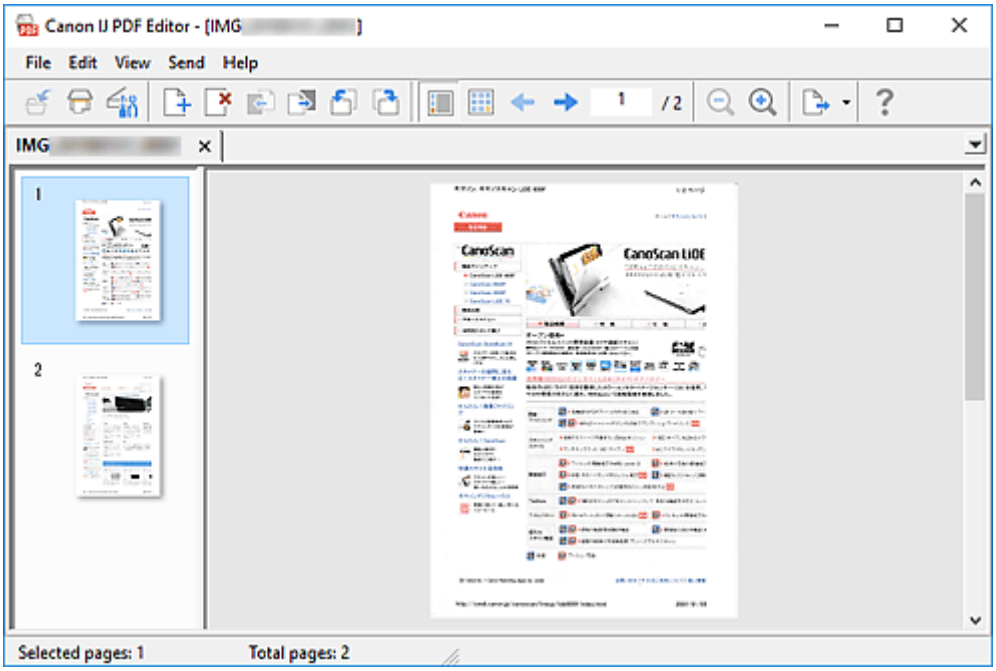

Scanning starts.

Note

- To open a file saved on the computer, click **Open...** from the **File** menu, and then select the file you want to edit.
- You can switch the view with the Toolbar buttons. For details, see PDF Edit Screen.

6. Add pages as needed.

When scanning and adding more items:

Place items, and then click (Scan) on the Toolbar.

When adding existing images or PDF files:

Click (Add Page) on the Toolbar. After the **Open** dialog box appears, select the image(s) or PDF file(s) you want to add, and then click **Open**.

Note

- You can also add images or PDF files from **Add Page from Saved Data...** in the **File** menu.

7. Edit pages as needed.

When changing page order:

Click the page you want to move, and then click (Page Up) or (Page Down) on the Toolbar to change the page order. You can also change the page order by dragging and dropping a page to the target location.

When deleting pages:

Click the page you want to delete, and then click (Delete Page) on the Toolbar.

Note

- These buttons appear when two or more pages have been created.

8. Select **Save As...** in **File** menu.

   The **Save** dialog box appears.

9. Specify save settings.

   ➡ **Save** Dialog Box (PDF Edit Screen)

10. Click **Save**.

    The PDF file is saved.

Note

- When a password-protected PDF file is edited, the passwords will be deleted. Reset the passwords in the **Save** dialog box.

  ➡ Setting Passwords for PDF Files

- To overwrite a saved file, click (Save) on the Toolbar.

Scanning Using Application Software (ScanGear)

- What Is ScanGear (Scanner Driver)?
- Starting ScanGear (Scanner Driver)
- Scanning in Basic Mode
- ScanGear (Scanner Driver) Screens
- General Notes (Scanner Driver)

Important

- Available functions and settings vary depending on your scanner or printer.

What Is ScanGear (Scanner Driver)?

ScanGear (scanner driver) is software required for scanning documents. Use the software to specify the output size, image corrections, and other settings.

ScanGear can be started from IJ Scan Utility or applications that are compatible with the standard TWAIN interface. (ScanGear is a TWAIN-compatible driver.)

Features

Specify the document type, output size, and other settings when scanning documents and preview scan results. Make various correction settings or finely adjust the brightness, contrast, and other parameters to scan in a specific color tone.

Screens

There are two modes: Basic Mode and Advanced Mode.

Switch modes with the tabs on the upper right of the screen.

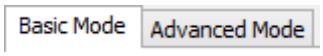

Note

- ScanGear starts in the last used mode.
- Settings are not retained when you switch modes.

Basic Mode

Use the **Basic Mode** tab to scan easily by following three simple on-screen steps (1, 2, and 3).

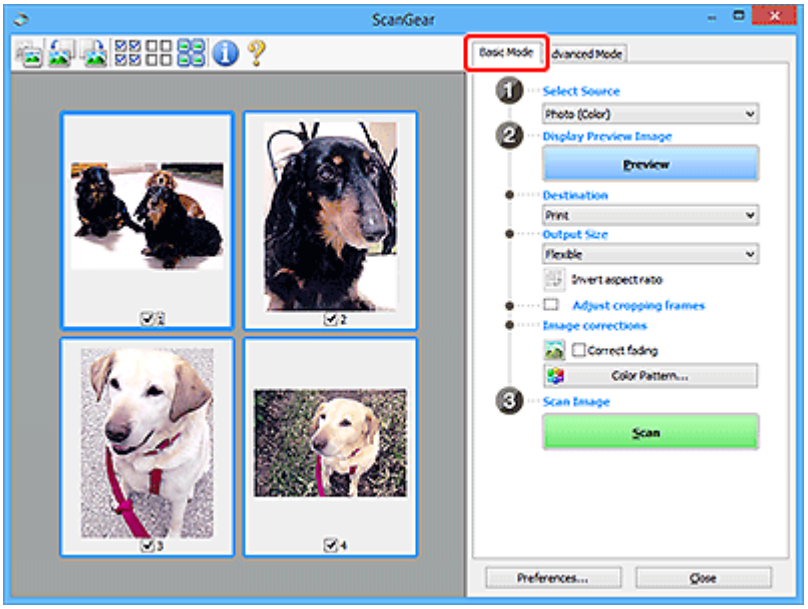

Advanced Mode

Use the **Advanced Mode** tab to scan by specifying the color mode, output resolution, image brightness, color tone, and other settings.

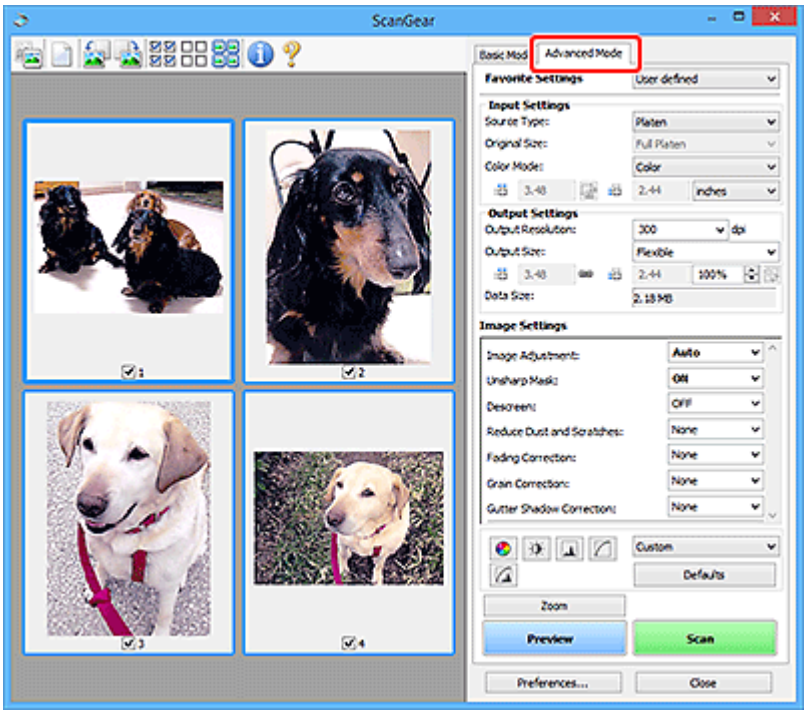

Starting ScanGear (Scanner Driver)

Use ScanGear (scanner driver) to make image corrections and color adjustments when scanning. Start ScanGear from IJ Scan Utility or other applications.

Note

- If you have more than one scanner or have a network compatible model and changed the connection from USB connection to network connection, set up the network environment.

Starting from IJ Scan Utility

1. Start IJ Scan Utility.

   For details, click Home to return to the top page of the Online Manual for your model and search for "Starting IJ Scan Utility."

2. In IJ Scan Utility main screen, click ScanGear.

   The ScanGear screen appears.

Starting from Application

The procedure varies depending on the application. For details, see the application's manual.

1. Start application.

2. On application's menu, select machine.

   Note

   - A machine connected over a network, will have "Network" displayed after the product name.

3. Scan document.

   The ScanGear screen appears.

Scanning in Basic Mode

Use the **Basic Mode** tab to scan easily by following these simple on-screen steps.

To scan multiple documents at one time from the Platen, see Scanning Multiple Documents at One Time with ScanGear (Scanner Driver).

When scanning from the ADF (Auto Document Feeder), preview is not available.

Important

- The following types of documents may not be scanned correctly. In that case, click (Thumbnail) on the Toolbar to switch to whole image view and scan.
  - Photos with a whitish background
  - Documents printed on white paper, hand-written text, business cards, and other unclear documents
  - Thin documents
  - Thick documents
- The following types of documents cannot be scanned correctly.
  - Documents smaller than 1.2 inches (3 cm) square
  - Photos that have been cut to irregular shapes

Note

- Both sides of a two sided document can be scanned simultaneously on models with ADF duplex scanning support.

1. Place document on machine's Platen or ADF, and then start ScanGear (scanner driver).

   ➡ Positioning Originals (Scanning from Computer)
   ➡ Starting ScanGear (Scanner Driver)

2. Set **Select Source** to match your document.

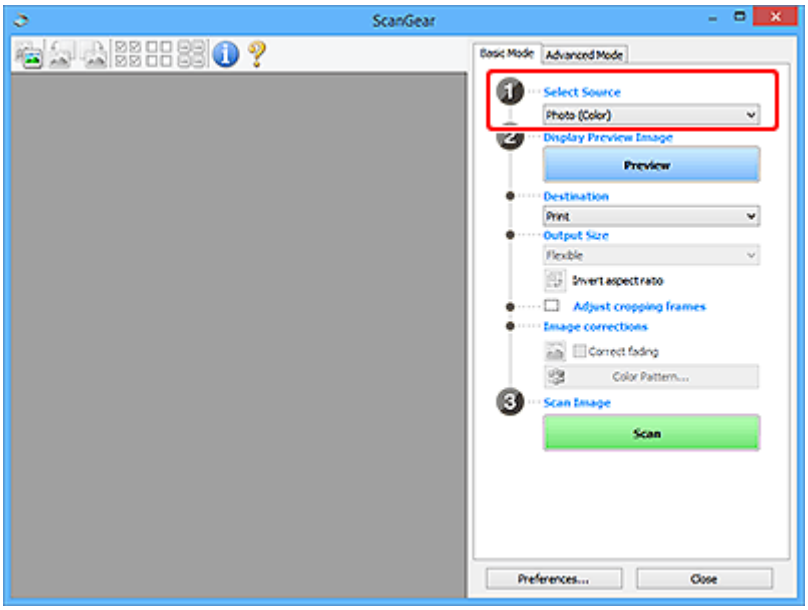

Important

- Some applications do not support continuous scanning from the ADF. For details, see the application's manual.

Note

- To scan magazines containing many color photos, select **Magazine (Color)**.

3. Click **Preview**.

Preview image appears in the Preview area.

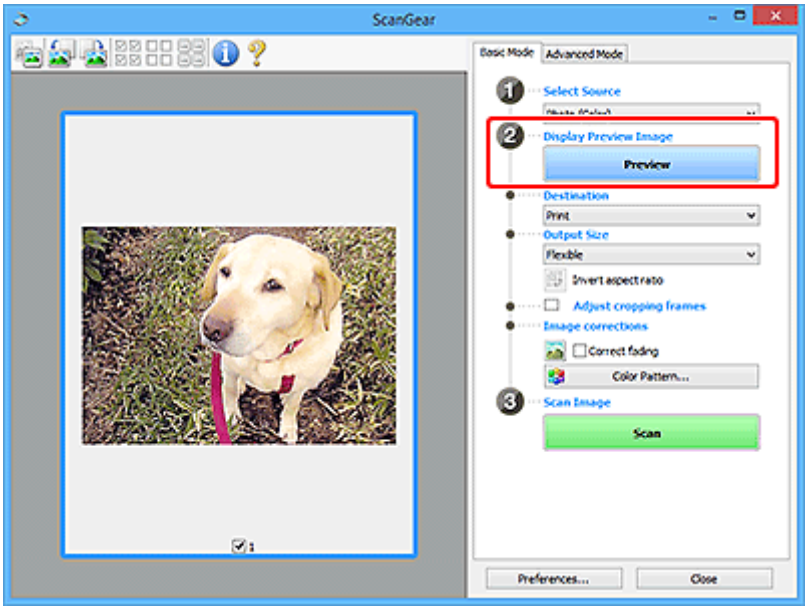

Important

- **Preview** is not available when scanning from the ADF.

Note

- Colors are adjusted based on the document type selected in **Select Source**.

4. Set **Destination**.

Note

- Skip ahead to Step 7 if an ADF option is selected in **Select Source**.

5. Set **Output Size**.

Output size options vary with the selected **Destination**.

6. Adjust cropping frames (scan areas) as needed.

Adjust the size and position of the cropping frames on the preview image.

➡ Adjusting Cropping Frames (ScanGear)

7. Set **Image corrections** as needed.

8. Click **Scan**.

   Scanning starts.

Note

- Click (Information) to display a dialog box showing the document type and other details of the current scan settings.
- How ScanGear behaves after scanning is complete can be set from **Status of ScanGear dialog after scanning** on the **Scan** tab of the **Preferences** dialog box.

Related Topic

➡ **Basic Mode** Tab

ScanGear (Scanner Driver) Screens

- Basic Mode Tab
- Advanced Mode Tab

Basic Mode Tab

Use the **Basic Mode** tab to scan easily by following these simple on-screen steps.

This section describes the settings and functions available on the **Basic Mode** tab.

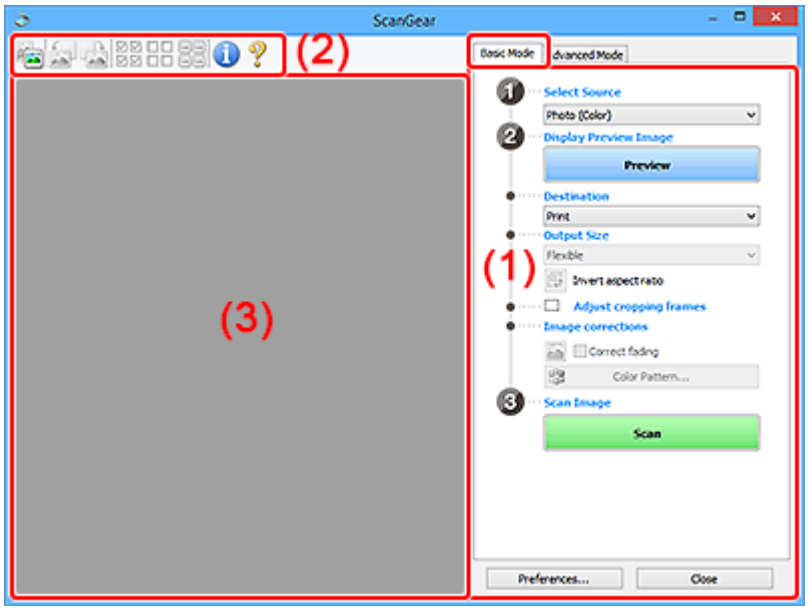

- (1) Settings and Operation Buttons
- (2) Toolbar
- (3) Preview Area

Note

- The displayed items vary by document type and view.
- Preview is not available when scanning from the ADF (Auto Document Feeder).

(1) Settings and Operation Buttons

Select Source

Photo (Color)

Scan color photos.

Magazine (Color)

Scan color magazines.

Document (Color)

Scan documents in color.

Document (Grayscale)

Scan documents in black and white.

Document (Color) ADF Simplex

Scan documents from the ADF in color.

Document (Grayscale) ADF Simplex

Scan documents from the ADF in black and white.

Document (Color) ADF Duplex (only for models supporting ADF duplex scanning)

Scan both sides of documents from the ADF in color.

Document (Grayscale) ADF Duplex (only for models supporting ADF duplex scanning)

Scan both sides of documents from the ADF in black and white.

Important

- Some applications do not support continuous scanning from the ADF. For details, see the application's manual.

Note

- When you select a document type, the unsharp mask function will be active.
- When you select an option other than the ADF types, the image adjustment function which adjusts images based on the document type will also be active.
- When you select **Magazine (Color)**, the descreen function will be active.

Display Preview Image

Preview

Performs a trial scan.

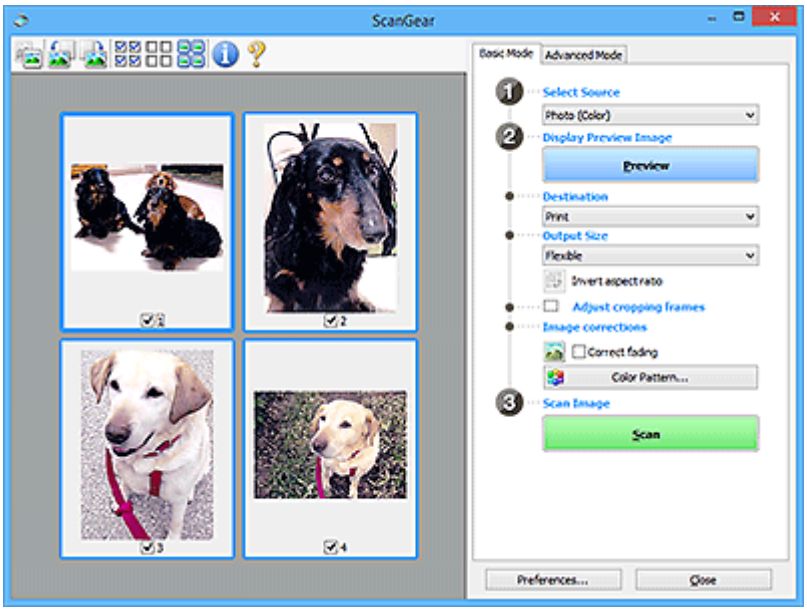

Note

- When using the machine for the first time, scanner calibration starts automatically. Wait a while until the preview image appears.

Destination

Select what you want to do with the scanned image.

Print

Select this to print the scanned image on a printer.

Image display

Select this to view the scanned image on a monitor.

OCR

Select this to use the scanned image with OCR software.

"OCR software" is software that converts text scanned as an image into text data that can be edited in word processors and other programs.

Output Size

Select an output size.

Output size options vary by the item selected in **Destination**.

Flexible

Adjust the cropping frames (scan areas) freely.

In thumbnail view:

Drag the mouse over a thumbnail to display a cropping frame. When a cropping frame is displayed, the portion within the cropping frame will be scanned. When no cropping frame is displayed, each frame is scanned individually.

In whole image view:

When no cropping frame is displayed, the entire Preview area will be scanned. When a cropping frame is displayed, the portion within the cropping frame will be scanned.

Paper Size (such as L or A4)

Select an output paper size. The portion within the cropping frame will be scanned at the size of the selected paper size. Drag the cropping frame to enlarge/reduce it while maintaining the aspect ratio.

Monitor Size (such as 1024 x 768 pixels)

Select an output size in pixels. A cropping frame of the selected monitor size will appear and the portion within the cropping frame will be scanned. Drag the cropping frame to enlarge/reduce it while maintaining the aspect ratio.

Add/Delete...

Displays the **Add/Delete the Output Size** dialog box for specifying custom output sizes. This option can be selected when **Destination** is **Print** or **Image display**.

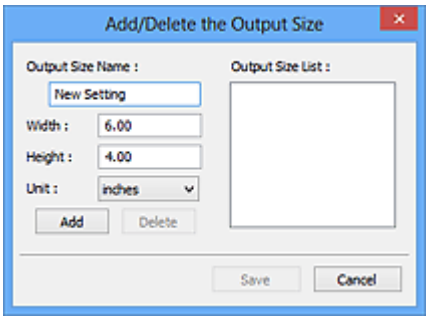

In the **Add/Delete the Output Size** dialog box, multiple output sizes can be specified and then saved at one time. Saved items will be registered to the **Output Size** list and can be selected, along with the predefined items.

Adding:

Enter **Output Size Name**, **Width**, and **Height**, and then click **Add**. For **Unit**, select **inches** or **mm** if **Destination** is **Print**; if it is **Image display**, only **pixels** can be selected. The name of the added size appears in **Output Size List**. Click **Save** to save the items listed in **Output Size List**.

Deleting:

Select the output size you want to delete in **Output Size List**, and then click **Delete**. Click **Save** to save the items listed in **Output Size List**.

Important

- Predefined output sizes such as **A4** and **1024 x 768 pixels** cannot be deleted.

Note

- Save up to 10 items.
- An error message appears when you enter a value outside the setting range. Enter a value within the setting range.

Note

- For details on whether or how the cropping frame initially appears on a preview image, see **Cropping Frame on Previewed Images** in **Preview** Tab of the **Preferences** dialog box.

Invert aspect ratio

Available when **Output Size** is set to anything but **Flexible**.

Click this button to rotate the cropping frame. Click again to return it to the original orientation.

Adjust cropping frames

Adjust the scan area within the Preview area.

If an area is not specified, the document will be scanned at the document size (Auto Crop). If an area is specified, only the portion in the cropping frame will be scanned.

➡ Adjusting Cropping Frames (ScanGear)

Image corrections

Correct the image to be scanned.

Important

- **Apply Auto Document Fix** and **Correct fading** are available when **Recommended** is selected on the **Color Settings** tab of the **Preferences** dialog box.

Note

- Available functions vary by the document type selected in **Select Source**.

Apply Auto Document Fix

Sharpens text in a document or magazine for better readability.

Important

- Scanning may take longer than usual when this checkbox is selected.
- The color tone may change from the source image due to corrections. In that case, deselect the checkbox and scan.
- Correction may not be applied properly if the scan area is too small.

Correct fading

Corrects photos that have faded with time or have a colorcast.

Correct gutter shadow

Corrects shadows that appear between pages when scanning open booklets.

Important

- Be sure to see **Gutter Shadow Correction** for precautions and other information on using this function.

Color Pattern...

Adjust the image's overall color. Correct colors that have faded due to colorcast or other reasons and reproduce natural colors while previewing color changes.

➡ Adjusting Colors Using a Color Pattern

Important

- This setting is not available when **Color Matching** is selected on the **Color Settings** tab of the **Preferences** dialog box.

Scan Image

Scan

Starts scanning.

Note

- When scanning starts, the progress appears. To cancel the scan, click **Cancel**.

Preferences...

Displays the **Preferences** dialog box for making scan/preview settings.

Close

Closes ScanGear (scanner driver).

(2) Toolbar

Adjust or rotate preview images. The buttons displayed on the Toolbar vary by view.

In thumbnail view:

In whole image view:

(Thumbnail) / **(Whole Image)**

Switches the view in the Preview area.

➡ (3) Preview Area

(Rotate Left)

Rotates the preview image 90 degrees counter-clockwise.

- The result will be reflected in the scanned image.

- The image returns to its original state when you preview again.

(Rotate Right)

Rotates the preview image 90 degrees clockwise.

- The result will be reflected in the scanned image.
- The image returns to its original state when you preview again.

(Auto Crop)

Displays and adjusts the cropping frame automatically to the size of the document displayed in the Preview area. The scan area is reduced every time you click this button if there are croppable areas within the cropping frame.

(Check All Frames)

Available when two or more frames are displayed.

Selects the checkboxes of the images in thumbnail view.

(Uncheck All Frames)

Available when two or more frames are displayed.

Deselects the checkboxes of the images in thumbnail view.

(Select All Frames)

Available when two or more frames are displayed.

Selects the images in thumbnail view and outlines them in blue.

(Select All Cropping Frames)

Available when two or more cropping frames are specified.

Turns the cropping frames into thick broken lines and applies the settings to all of them.

(Remove Cropping Frame)

Removes the selected cropping frame.

(Information)

Displays the version of ScanGear, along with the document type and other details of the current scan settings.

(Open Guide)

Opens this page.

(3) Preview Area

This is where a trial image appears after you click **Preview**. The results of image corrections, color adjustments, and other settings made in (1) Settings and Operation Buttons are also reflected.

When (Thumbnail) is displayed on Toolbar:

Cropping frames are specified according to the document size, and thumbnails of scanned images appear. Only the images with the checkbox selected will be scanned.

Note

- When multiple images are previewed, different outlines indicate different selection status.
  - Focus Frame (thick blue outline): The displayed settings will be applied.
  - Selected Frame (thin blue outline): The settings will be applied to the Focus Frame and Selected Frames simultaneously. To select multiple images, click them while pressing the Ctrl key.
  - Unselected (no outline): The settings will not be applied.
- Double-click a frame to enlarge the image. Click (Frame Advance) at the bottom of the screen to display the previous or next frame. Double-click the enlarged frame again to return it to its original state.

When (Whole Image) is displayed on Toolbar:

Items on the Platen are scanned and appear as a single image. All portions in the cropping frames will be scanned.

Note

- Create cropping frame(s) on the displayed image. In thumbnail view, one cropping frame can be created per image. In whole image view, multiple cropping frames can be created.

  ➡ Adjusting Cropping Frames (ScanGear)

Related Topic

➡ Scanning in Basic Mode

Advanced Mode Tab

This mode allows you to make advanced scan settings such as the color mode, output resolution, image brightness, and color tone.

This section describes the settings and functions available on the **Advanced Mode** tab.

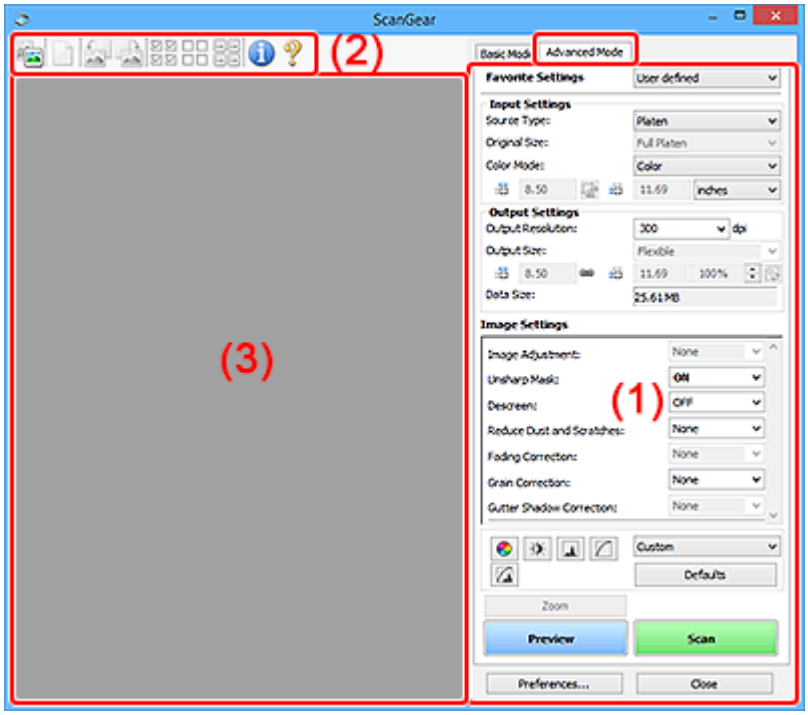

- (1) Settings and Operation Buttons
- (2) Toolbar
- (3) Preview Area

Important

- The displayed items vary depending on your model, document type, and view.
- The preview function is not available when scanning from the ADF (Auto Document Feeder).

(1) Settings and Operation Buttons

Favorite Settings

You can name and save a group of settings (Input Settings, Output Settings, Image Settings, and Color Adjustment Buttons) on the **Advanced Mode** tab, and load it as required. It is convenient to save a group of settings if you will be using it repeatedly. You can also use this to reload the default settings.

Select **Add/Delete...** from the pull-down menu to open the **Add/Delete Favorite Settings** dialog box.

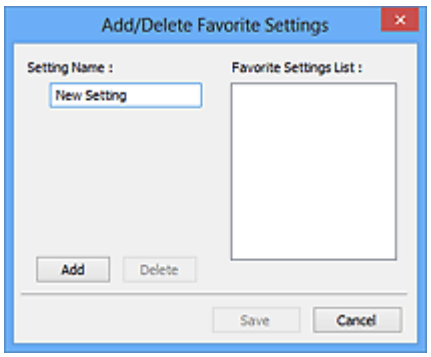

Enter **Setting Name** and click **Add**; the name appears in **Favorite Settings List**.

When you click **Save**, the item appears in the **Favorite Settings** list and can be selected, along with the predefined items.

To delete an item, select it in **Favorite Settings List** and click **Delete**. Click **Save** to save the settings displayed in **Favorite Settings List**.

Note

- You can set **Add/Delete...** in **Favorite Settings** after preview.
- Save up to 10 items.

Input Settings

Specify the input settings such as the document type and size.

Output Settings

Specify the output settings such as the output resolution and size.

Image Settings

Enable/disable various image correction functions.

Color Adjustment Buttons

Fine corrections to the image brightness and color tones can be made including adjustments to the image's overall brightness or contrast and adjustments to its highlight and shadow values (histogram) or balance (tone curve).

Zoom

Zooms in on a frame, or zooms in on the image in the area specified with a cropping frame (scan area). When zoomed in, **Zoom** changes to **Undo**. Click **Undo** to return the display to its non-magnified state.

In thumbnail view:

When multiple images are displayed in thumbnail view, clicking this button zooms in on the selected frame. Click (Frame Advance) at the bottom of the screen to display the previous or next frame.

Note

- You can also zoom in on an image by double-clicking the frame. Double-click the enlarged frame again to return it to its original state.

In whole image view:

Rescans the image in the area specified with a cropping frame at higher magnification.

Note

- **Zoom** rescans the document and displays high-resolution image in Preview.
- (Enlarge/Reduce) on the Toolbar zooms in on the preview image quickly. However, the resolution of the displayed image will be low.

Preview

Performs a trial scan.

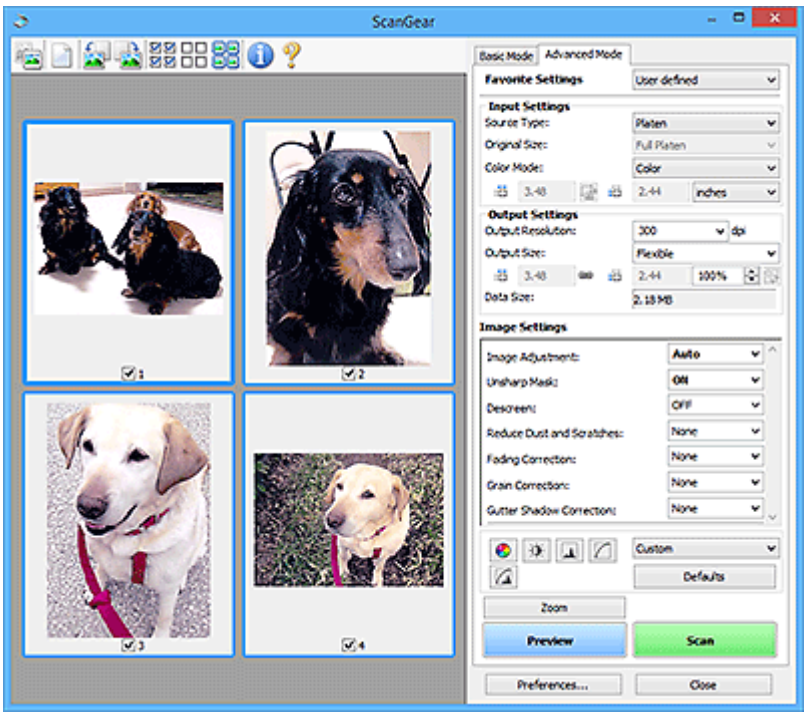

Scan

Starts scanning.

Note

- When scanning starts, the progress appears. To cancel the scan, click **Cancel**.
- When scanning is completed, a dialog box prompting you to select the next action may appear. Follow the prompt to complete. For details, refer to **Status of ScanGear dialog after scanning** in **Scan** Tab (**Preferences** dialog box).
- It will take time to process the images if the total size of the scanned images exceeds a certain size. In that case, a warning message appears; it is recommended that you reduce the total size. To continue, scan in whole image view.

Preferences...

Displays the **Preferences** dialog box for making scan/preview settings.

Close

Closes ScanGear (scanner driver).

(2) Toolbar

Adjust or rotate preview images. The buttons displayed on the Toolbar vary by view.

In thumbnail view:

In whole image view:

(Thumbnail) / **(Whole Image)**

Switches the view in the Preview area.

➡ (3) Preview Area

(Clear)

Deletes the preview image from the Preview area.

It also resets the Toolbar and color adjustment settings.

(Crop)

Allows you to specify the scan area by dragging the mouse.

 (Move Image)

Allows you to drag the image until the part you want to see is displayed when an image enlarged in the Preview area does not fit in the screen. You can also move the image using the scroll bars.

(Enlarge/Reduce)

Allows you to zoom in on the Preview area by clicking the image. Right-click the image to zoom out.

(Rotate Left)

Rotates the preview image 90 degrees counter-clockwise.

- The result will be reflected in the scanned image.
- The image returns to its original state when you preview again.

(Rotate Right)

Rotates the preview image 90 degrees clockwise.

- The result will be reflected in the scanned image.
- The image returns to its original state when you preview again.

(Auto Crop)

Displays and adjusts the cropping frame automatically to the size of the document displayed in the Preview area. The scan area is reduced every time you click this button if there are croppable areas within the cropping frame.

(Check All Frames)

Available when two or more frames are displayed.

Selects the checkboxes of the images in thumbnail view.

(Uncheck All Frames)

Available when two or more frames are displayed.

Deselects the checkboxes of the images in thumbnail view.

(Select All Frames)

Available when two or more frames are displayed.

Selects the images in thumbnail view and outlines them in blue.

(Select All Cropping Frames)

Available when two or more cropping frames are specified.

Turns the cropping frames into thick broken lines and applies the settings to all of them.

(Remove Cropping Frame)

Removes the selected cropping frame.

(Information)

Displays the version of ScanGear, along with the document type and other details of the current scan settings.

(Open Guide)

Opens this page.

(3) Preview Area

This is where a trial image appears after you click **Preview**. The results of image corrections, color adjustments, and other settings made in (1) Settings and Operation Buttons are also reflected.

When (Thumbnail) is displayed on Toolbar:

Cropping frames are specified according to the document size, and thumbnails of scanned images appear. Only the images with the checkbox selected will be scanned.

Note

- When multiple images are previewed, different outlines indicate different selection status.
  - Focus Frame (thick blue outline): The displayed settings will be applied.
  - Selected Frame (thin blue outline): The settings will be applied to the Focus Frame and Selected Frames simultaneously. To select multiple images, click them while pressing the Ctrl key.
  - Unselected (no outline): The settings will not be applied.

When (Whole Image) is displayed on Toolbar:

Items on the Platen are scanned and appear as a single image. All portions in the cropping frames will be scanned.

Note

- Create cropping frame(s) on the displayed image. In thumbnail view, one cropping frame can be created per image. In whole image view, multiple cropping frames can be created.

  ➡ Adjusting Cropping Frames (ScanGear)

Related Topic

➡ Scanning in Advanced Mode

➡ Scanning Multiple Documents from the ADF (Auto Document Feeder) in Advanced Mode

General Notes (Scanner Driver)

ScanGear (scanner driver) is subject to the following restrictions. Keep these points in mind when using it.

Scanner Driver Restrictions

- When using the NTFS file system, the TWAIN data source may not be invoked. This is because the TWAIN module cannot be written to the winnt folder for security reasons. Contact the computer's administrator for help.
- Some computers (including laptops) connected to the machine may not resume correctly from standby mode. In that case, restart the computer.
- Do not connect two or more scanners or multifunction printers with scanner function to the same computer simultaneously. If multiple scanning devices are connected, you cannot scan from the operation panelor scanner buttons of the machine and also may experience errors while accessing the devices.
- Calibration may take time if the machine is connected via USB1.1.
- Scanning may fail if the computer has resumed from sleep or standby mode. In that case, follow these steps and scan again.

  If your model has no power button, perform Step 2 only.

  1. Turn off the machine.
  2. Exit ScanGear, then disconnect the USB cable from the computer and reconnect it.
  3. Turn on the machine.

  If scanning still fails, restart the computer.

- ScanGear cannot be opened in multiple applications at the same time. Within an application, ScanGear cannot be opened for the second time when it is already open.
- Be sure to close the ScanGear window before closing the application.
- When using a network compatible model by connecting to a network, the machine cannot be accessed from multiple computers at the same time.
- When using a network compatible model by connecting to a network, scanning takes longer than usual.
- Make sure that you have adequate disk space available when scanning large images at high resolutions. For example, at least 300 MB of free space is required to scan an A4 document at 600 dpi in full-color.
- ScanGear and WIA driver cannot be used at the same time.
- Do not enter the computer into sleep or hibernate state during scanning.

Applications with Restrictions on Use

- Some applications may not display the TWAIN user interface. In that case, refer to the application's manual and change the settings accordingly.
- Some applications do not support continuous scanning of multiple documents. In some cases, only the first scanned image is accepted, or multiple images are scanned as one image. For such applications, do not scan multiple documents from the ADF (Auto Document Feeder).
- To import scanned images into Microsoft Office 2000, first save them using IJ Scan Utility, then import the saved files from the **Insert** menu.

- When scanning Platen size images into Microsoft Office 2003 (Word, Excel, PowerPoint, etc.), click **Custom Insert** in the **Insert Picture from Scanner or Camera** screen. Otherwise, images may not be scanned correctly.
- When scanning images into Microsoft Office 2007/Microsoft Office 2010 (Word, Excel, PowerPoint, etc.), use Microsoft Clip Organizer.
- Images may not be scanned correctly in some applications. In that case, increase the operating system's virtual memory and retry.
- When image size is too large (such as when scanning large images at high resolution), your computer may not respond or the progress bar may remain at 0 % depending on the application. In that case, cancel the action (for example by clicking **Cancel** on the progress bar), then increase the operating system's virtual memory or reduce the image size/resolution and retry. Alternatively, scan the image via IJ Scan Utility first, then save and import it into the application.

Scanning Tips

- **Positioning Originals (Scanning from Computer)**
- **Network Scan Settings**
  - IJ Network Scanner Selector EX2 Menu and Setting Screen

Positioning Originals (Scanning from Computer)

This section describes how to load originals on the platen or ADF (Auto Document Feeder) for scanning. If items are not placed correctly they may not be scanned correctly.

Important

- Be sure to observe the following when loading the original on the platen. Failure to observe the following may cause the scanner to malfunction or the platen glass to break.
  - Do not place any objects weighing 4.4 lb (2.0 kg) or more on the platen glass.
  - Do not put any pressure of 4.4 lb (2.0 kg) or more on the platen glass, such as pressing down the original.
- Close the document cover when scanning.
- Do not touch the operation panel buttons or LCD (Liquid Crystal Display) when opening/closing the document cover. May result in unintended operation.

➡ Placing Items (Platen)
➡ Placing Documents (ADF (Auto Document Feeder))

Placing Items (Platen)

Place items as described below to scan by detecting the item type and size automatically.

Important

- When scanning by specifying the paper size in IJ Scan Utility or ScanGear (scanner driver), align an upper corner of the item with the corner at the arrow (alignment mark) of the platen.
- Photos that have been cut to irregular shapes and items smaller than 1.2 inches (3 cm) square cannot be cropped accurately when scanning.
- Reflective disc labels may not be scanned as expected.

Photos, Postcards, Business Cards, and BD/DVD/CD	Magazines, Newspapers, and Documents
Single item: Place the item face-down on the platen, with 0.4 inch (1 cm) or more space between the edges (diagonally striped area) of the platen and the item. Portions placed on the diagonally striped area cannot be scanned.	Place the item face-down on the platen and align an upper corner of the item with the corner at the arrow (alignment mark) of the platen. Portions placed on the diagonally striped area cannot be scanned.

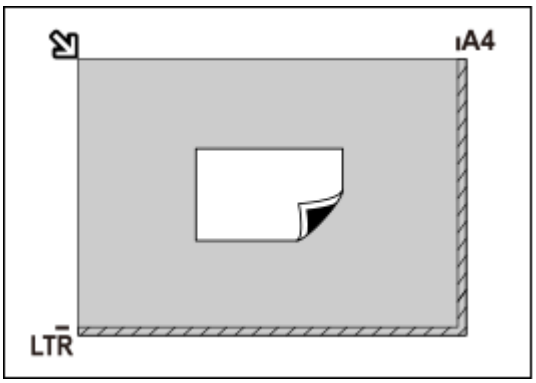

Important

- Large items (such as A4 size photos) that cannot be placed away from the edges/arrow (alignment mark) of the platen may be saved as PDF files. To save in a format other than PDF, scan by specifying the data format.

Multiple items:

Allow 0.4 inch (1 cm) or more space between the edges (diagonally striped area) of the platen and items, and between items. Portions placed on the diagonally striped area cannot be scanned.

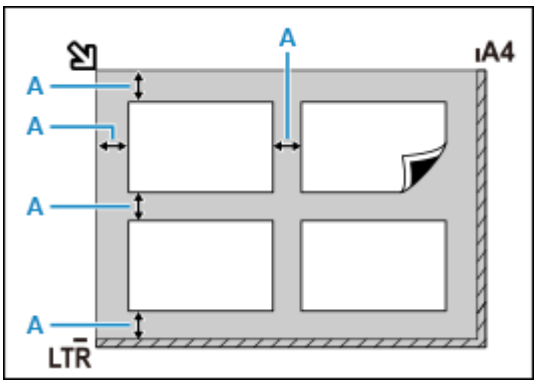

A : 0.4 inch (1 cm) or more

Note

- Place up to 12 items.
- Positions of slanted items (10 degrees or less) are corrected automatically.

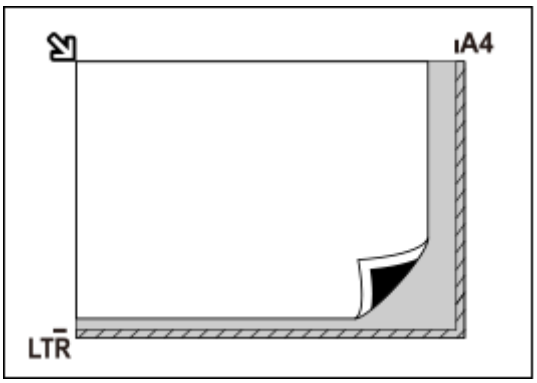

Important

- For the portions in which items cannot be scanned, see Loading Originals.

Placing Documents (ADF (Auto Document Feeder))

Important

- Place and align documents of the same size when scanning two or more documents.
- For supported document sizes when scanning from the ADF, see Supported Originals.

1. Make sure any original has been removed from platen.

2. Open document tray (A).

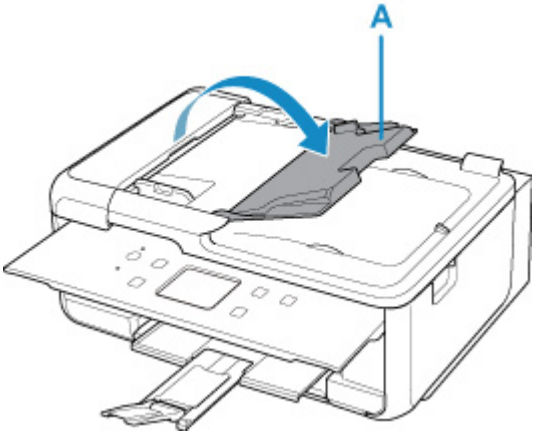

3. Slide the document guide (B) all the way out.

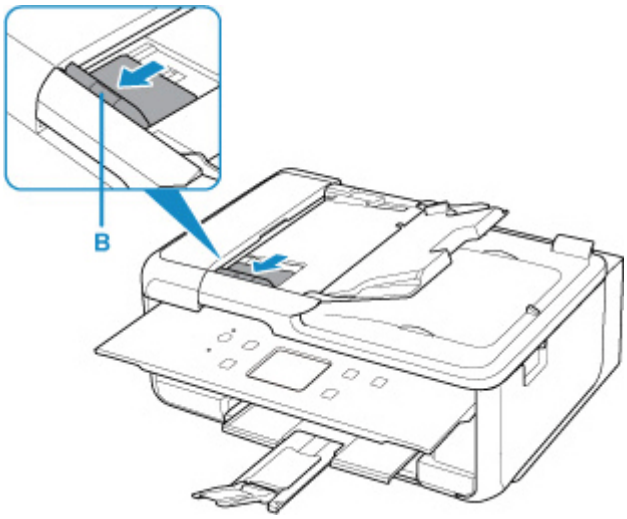

4. Load document with side to scan facing up in document tray.

   Insert the document until it stops.

5. Adjust document guide to match width of document.

   Do not slide the document guide too hard against the document. The document may not be fed properly.

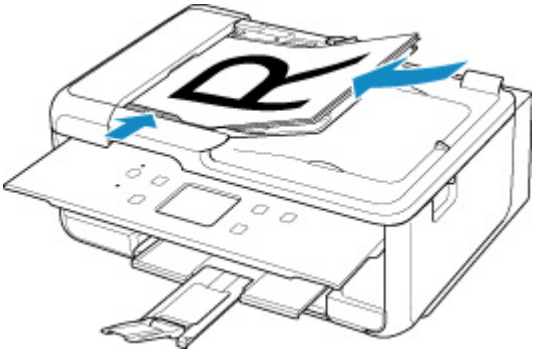

Network Scan Settings

You can connect your scanner or printer to a network to share it among multiple computers or scan images into a specified computer.

Important

- Multiple users cannot scan at the same time.

Note

- Complete the network settings of your scanner or printer beforehand by following the instructions on our website.
- With network connection, scanning takes longer than USB connection.

Complete the following settings to enable scanning over a network.

Specifying Your Scanner or Printer

Use IJ Network Scanner Selector EX to specify the scanner you want to use. By specifying the scanner, you can scan over a network from your computer or the operation panel.

Important

- If the product you want to use is changed with IJ Network Scanner Selector EX, the product used for scanning with IJ Scan Utility changes as well. The product for scanning from the operation panel also changes.

  If your scanner or printer is not selected in IJ Scan Utility, check that it is selected with IJ Network Scanner Selector EX.

  Refer to "IJ Network Scanner Selector EX2 Menu and Setting Screen" for your model from Home of the Online Manual for details.
- To scan from the operation panel, specify your scanner or printer with IJ Network Scanner Selector EX beforehand.

1. Check that IJ Network Scanner Selector EX is running.

   If IJ Network Scanner Selector EX is running, (IJ Network Scanner Selector EX2) appears in the notification area on the desktop. Click to check the hidden icons as well.

   Note

   - If the icon is not displayed in the notification area on the desktop, follow the procedure below to start.
     - **Windows 10:**

       From the **Start** menu, click (**All apps** >) **Canon Utilities** > **IJ Network Scanner Selector EX2**.
     - **Windows 8.1:**

       Click **IJ Network Scanner Selector EX2** on the Start screen.

If **IJ Network Scanner Selector EX2** is not displayed on the Start screen, select the **Search** charm, then search for "IJ Network Scanner Selector EX2".

– **Windows 7:**

From the **Start** menu, click **All Programs** > **Canon Utilities** > **IJ Network Scanner Selector EX2** > **IJ Network Scanner Selector EX2**.

The icon appears in the notification area on the desktop, and the Scan-from-PC Settings screen appears. In that case, skip ahead to Step 3.

2. In the notification area on the desktop, right-click (IJ Network Scanner Selector EX2), then select **Settings...**.

   The Scan-from-PC Settings screen appears.

3. Select your scanner or printer from **Scanners**.

   Normally, the MAC address of your scanner or printer is already selected after the network setup. In that case, you do not need to select it again.

   Important

   - If multiple scanners exist on the network, multiple model names appear. In that case, you can select one scanner per model.

4. Click **OK**.

Note

- The scanner selected in the Scan-from-PC Settings screen will be automatically selected in the Scan-from-Operation-Panel Settings screen as well.

Setting for Scanning with IJ Scan Utility

To scan from IJ Scan Utility using a scanner or printer connected to a network, specify your scanner or printer with IJ Network Scanner Selector EX, then follow the steps below to change the connection status between it and the computer.

1. Start IJ Scan Utility.

2. Select "Canon XXX series Network" (where "XXX" is the model name) for **Product Name**.

3. Click **Settings...** to use another scanner connected to a network.

4. Click (General Settings), then click **Select** in **Product Name**.

   The Scan-from-PC Settings screen of IJ Network Scanner Selector EX appears.

   Select the scanner you want to use and click **OK**.

5. In the **Settings (General Settings)** dialog box, click **OK**.

   The IJ Scan Utility main screen reappears. You can scan via a network connection.

Setting for Scanning from the Operation Panel

You can make the setting for scanning from the operation panel.

Important

- Set IJ Scan Utility to use your scanner or printer via a network connection beforehand.

  ➡ Setting for Scanning with IJ Scan Utility

1. Check that IJ Network Scanner Selector EX is running.

   If IJ Network Scanner Selector EX is running, (IJ Network Scanner Selector EX2) appears in the notification area on the desktop. Click to check the hidden icons as well.

   #### Note

   - If the icon is not displayed in the notification area on the desktop, follow the procedure below to start.

     – **Windows 10:**

       From the **Start** menu, click (**All apps** >) **Canon Utilities** > **IJ Network Scanner Selector EX2**.

     – **Windows 8.1:**

       Click **IJ Network Scanner Selector EX2** on the Start screen.

       If **IJ Network Scanner Selector EX2** is not displayed on the Start screen, select the **Search** charm, then search for "IJ Network Scanner Selector EX2".

     – **Windows 7:**

       From the **Start** menu, click **All Programs** > **Canon Utilities** > **IJ Network Scanner Selector EX2** > **IJ Network Scanner Selector EX2**.

     The icon appears in the notification area on the desktop, and the Scan-from-PC Settings screen appears. In that case, skip ahead to Step 3.

2. In the notification area on the desktop, right-click (IJ Network Scanner Selector EX2), then select **Settings...**.

   The Scan-from-PC Settings screen appears.

3. Click **Scan-from-Operation-Panel Settings**.

   The Scan-from-Operation-Panel Settings screen appears.

4. Select your scanner or printer from **Scanners** and click **OK**.

Select the MAC address of your scanner or printer.

Note

- When multiple scanners are connected via a network, you can select up to three scanners.

5. In the Scan-from-PC Settings screen, click **OK**.

Note

- If your scanner or printer does not appear, check the following, click **OK** to close the screen, then reopen it and try selecting again.
  - MP Drivers is installed
  - Network settings of your scanner or printer is completed after installing the MP Drivers
  - Network communication between your scanner or printer and computer is enabled

  If the problem is still not solved, see Network Communication Problems.

Scanning from Computer (macOS)

Scanning According to Item Type or Purpose (IJ Scan Utility Lite)

- IJ Scan Utility Lite Features
- Scanning Easily (Auto Scan) Basics
- Scanning Documents and Photos

Scanning Tips

- Positioning Originals (Scanning from Computer)

Important

- Available functions and settings vary depending on your scanner or printer.

Scanning According to Item Type or Purpose (IJ Scan Utility Lite)

- IJ Scan Utility Lite Features
- Scanning Easily (Auto Scan) Basics
- Scanning Documents and Photos

Important

- Available functions and settings vary depending on your scanner or printer.

IJ Scan Utility Lite Features

Use IJ Scan Utility Lite to scan and save documents, photos, or other items at one time by simply clicking the corresponding icon.

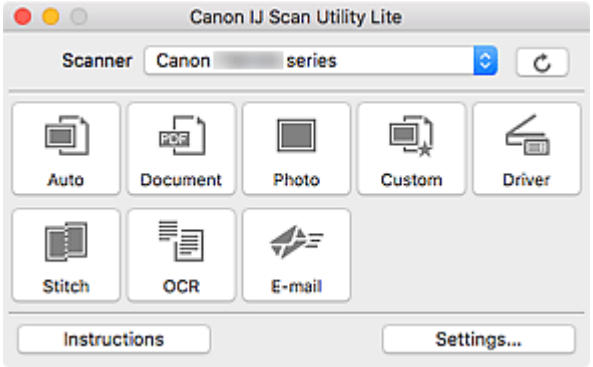

Important

- The displayed items and available functions vary depending on your scanner or printer.

Multiple Scanning Modes

Auto allows for one click scanning with default settings for various items. **Document** will sharpen text in a document or magazine for better readability, and **Photo** is best suited for scanning photos.

Note

- For details on the IJ Scan Utility Lite main screen, see IJ Scan Utility Lite Main Screen.

Save Scanned Images Automatically

Scanned images are automatically saved to a preset folder. The folder can be changed as needed.

Note

- The default save folder is the **Pictures** folder.
- For how to specify a folder, see Settings Dialog.

Application Integration

Scanned images can be sent to other applications. For example, display scanned images in your favorite graphics application, attach them to e-mails, or extract text from images.

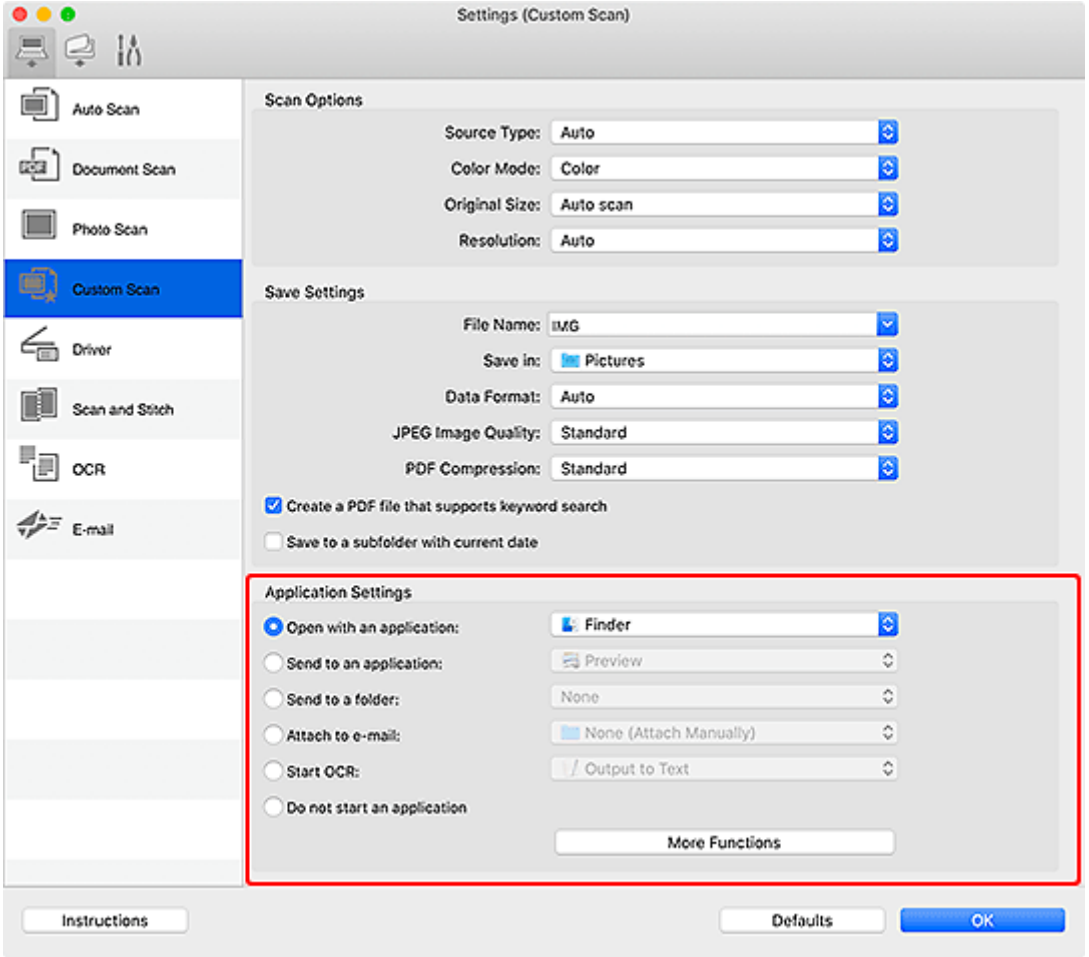

Note

- To set the applications to integrate with, see Settings Dialog.

Scanning Easily (Auto Scan)

Auto Scan allows for automatic detection of the type of the item placed on the platen or ADF (Auto Document Feeder).

Important

- This function is not supported depending on your model.
- The following types of items may not be scanned correctly. In that case, adjust the cropping frames (selection boxes; scan areas) in the screen displayed by clicking **Driver** in the IJ Scan Utility Lite main screen, and then scan again.
  - Photos with a whitish background
  - Items printed on white paper, hand-written text, business cards, and other unclear items
  - Thin items
  - Thick items
- When scanning two or more documents from the ADF, place documents of the same size.

1. Check that scanner or printer is turned on.

2. Place items on platen or ADF.

   ➡ Positioning Originals (Scanning from Computer)

3. Start IJ Scan Utility Lite.

4. Click **Auto**.

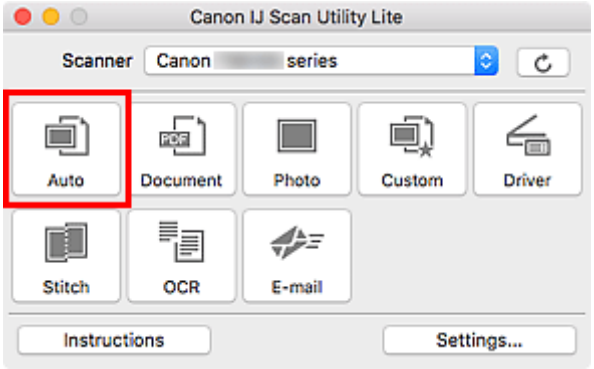

   Scanning starts.

Note

- To cancel the scan, click **Cancel**.
- Use the **Settings (Auto Scan)** dialog to set where to save the scanned images and to make advanced scan settings.
- To scan a specific item type, see the following pages.

  ➡ Scanning Documents and Photos
  ➡ Scanning with Favorite Settings

➡ Scanning Multiple Documents at One Time from the ADF (Auto Document Feeder)

Scanning Documents and Photos

Scan items placed on the platen with settings suitable for documents or photos.

Save documents in formats such as PDF and JPEG, and photos in formats such as JPEG and TIFF.

1. Place the item on the platen.

   ➡ Positioning Originals (Scanning from Computer)

2. Start IJ Scan Utility Lite.

3. To specify the paper size, resolution, PDF settings, etc., click **Settings...**, and then set each item in the Settings dialog.

   Note

   - Once settings are made in the Settings dialog, the same settings can be used for scanning from the next time.
   - In the Settings dialog, specify image processing settings such as slant correction, set where to save the scanned images, and more, as needed.

   When setting is completed, click **OK**.

4. Click **Document** or **Photo**.

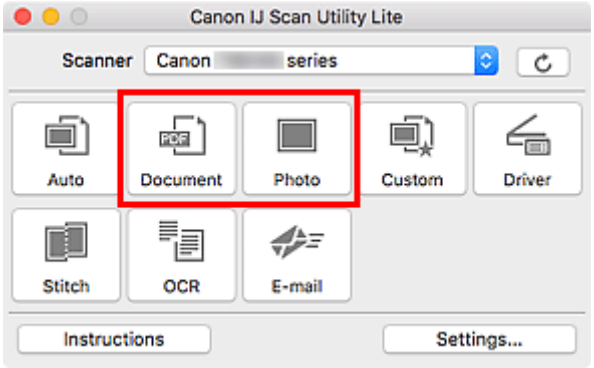

   Scanning starts.

Note

- To cancel the scan, click **Cancel**.

Scanning Tips

- Positioning Originals (Scanning from Computer)

Positioning Originals (Scanning from Computer)

This section describes how to load originals on the platen or ADF (Auto Document Feeder) for scanning. If items are not placed correctly they may not be scanned correctly.

Important

- Be sure to observe the following when loading the original on the platen. Failure to observe the following may cause the scanner to malfunction or the platen glass to break.
  - Do not place any objects weighing 4.4 lb (2.0 kg) or more on the platen glass.
  - Do not put any pressure of 4.4 lb (2.0 kg) or more on the platen glass, such as pressing down the original.
- Close the document cover when scanning.
- Do not touch the operation panel buttons or LCD (Liquid Crystal Display) when opening/closing the document cover. May result in unintended operation.
- When using a personal scanner in the upright position, the item type may not be detected automatically. In that case, specify the item type in IJ Scan Utility and scan.

➡ Placing Items (Platen)
➡ Placing Documents (ADF (Auto Document Feeder))
➡ Placing Items (When Using Stand)

Placing Items (Platen)

Place items as described below to scan by detecting the item type and size automatically.

Important

- Depending on your model, the function to scan by automatically detecting the item type and size does not appear.
- When scanning by specifying the paper size, align an upper corner of the item with the corner at the arrow (alignment mark) of the platen.
- Photos that have been cut to irregular shapes and items smaller than 1.2 inches (3 cm) square cannot be cropped accurately when scanning.
- Reflective disc labels may not be scanned as expected.
- If scanned by detecting the item type and size automatically, the response may differ. In that case, adjust the cropping frame (selection box) manually.

Photos, Postcards, Business Cards, and BD/DVD/CD	Magazines, Newspapers, and Documents
Single item: Place the item face-down on the platen, with 0.4 inch (1 cm) or more space between the edges (diagonally striped	Place the item face-down on the platen and align an upper corner of the item with the corner at the arrow (alignment mark) of the platen. Portions placed on the diagonally striped area cannot be scanned.

area) of the platen and the item. Portions placed on the diagonally striped area cannot be scanned.

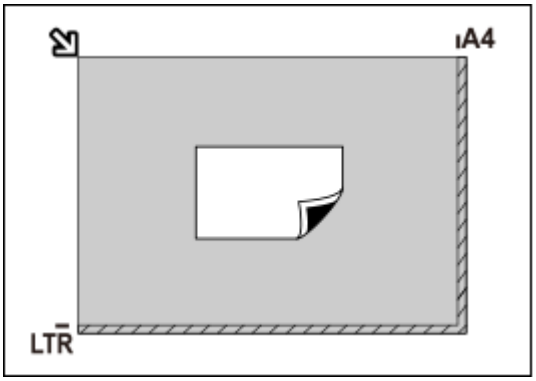

Important

- Large items (such as A4 size photos) that cannot be placed away from the edges/arrow (alignment mark) of the platen may be saved as PDF files. To save in a format other than PDF, scan by specifying the data format.

Multiple items:

Allow 0.4 inch (1 cm) or more space between the edges (diagonally striped area) of the platen and items, and between items. Portions placed on the diagonally striped area cannot be scanned.

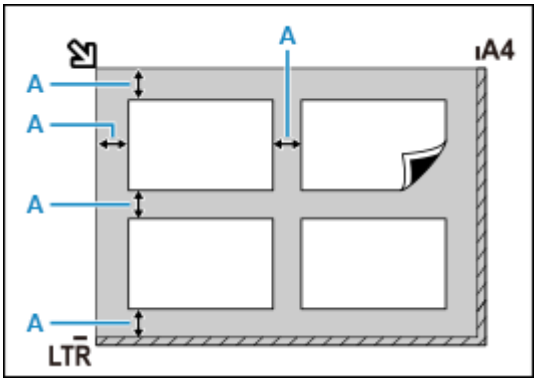

A : 0.4 inch (1 cm) or more

Note

- In IJ Scan Utility Lite, place up to 12 items.
- Positions of slanted items (10 degrees or less) are corrected automatically.

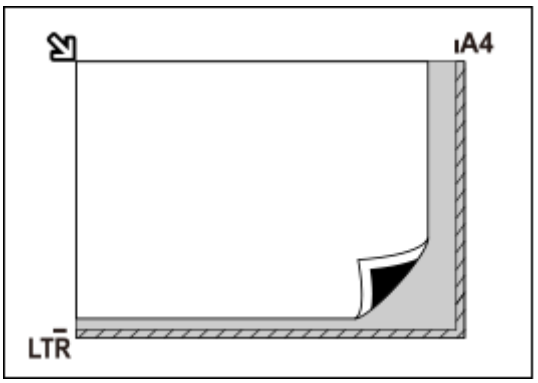

Important

- **Inkjet All-In-One printer:**

  For the portions in which items cannot be scanned, click Home to return to the top page of the Online Manual for your model and search for "Loading Originals."

- **Personal scanner:**

  For the portions in which items cannot be scanned, click Home to return to the top page of the Online Manual for your model and search for "Items You Can Place & How to Place Items."

Placing Documents (ADF (Auto Document Feeder))

Important

- Place and align documents of the same size when scanning two or more documents.
- For supported document sizes when scanning from the ADF, click Home to return to the top page of the Online Manual for your model and search for "Supported Originals."

1. Make sure any original has been removed from platen.

2. Open document tray (A).

3. Slide the document guide (B) all the way out.

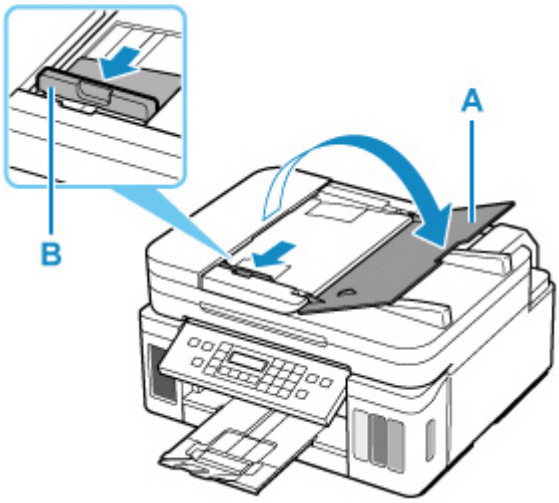

4. Load document with side to scan facing up in document tray.

   Insert the document until it stops.

5. Adjust document guide (B) to match width of document.

   Do not slide the document guide too hard against the document. The document may not be fed properly.

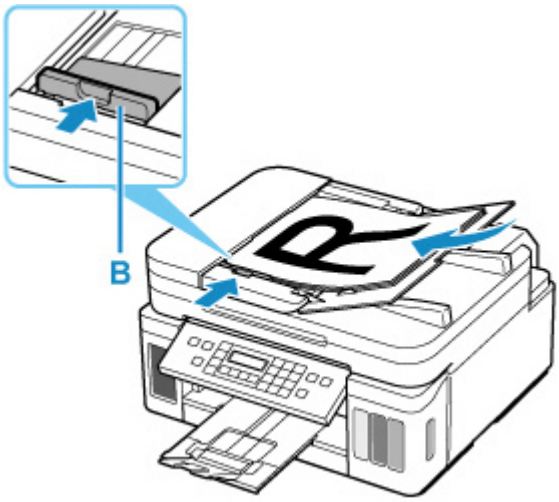

Note

- When scanning duplex documents, place the front sides facing up. They will not be scanned correctly if placed the other way around.

Placing Items (When Using Stand)

1. Place item on platen.

    1. Open the document cover.

    2. Place the item with the side to scan facing the platen, and then align it with the alignment mark.

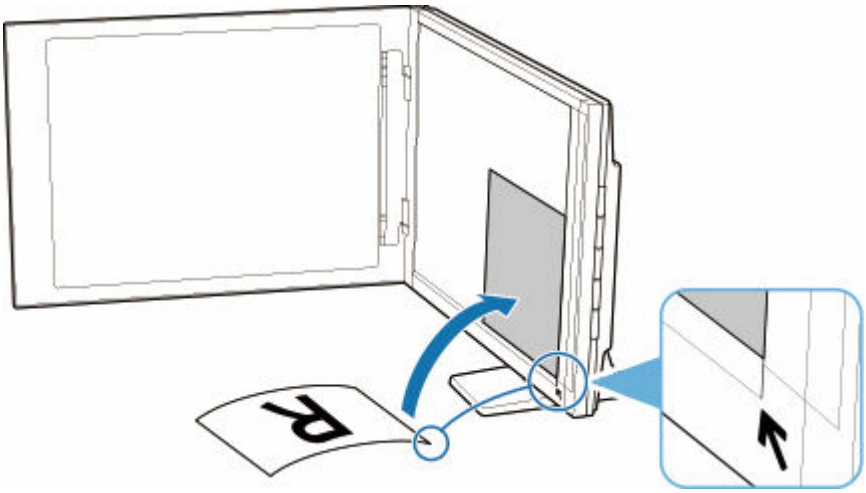

Important

- If you open the document cover wide, the scanner may fall over.
- Portions placed over (A) (0.094 inch (2.4 mm) from the left edge of the platen) or (B) (0.106 inch (2.7 mm) from the front edge) cannot be scanned.

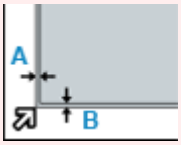

2. Gently close document cover.

While scanning, hold the document cover gently with your hand to keep it closed.

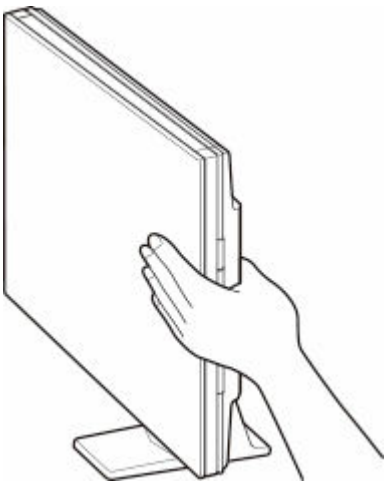

Important

- Keep these points in mind when using the scanner in the upright position.
  - Do not subject the scanner to vibration during operation. The correct image results may not be obtained (for example, images may blur).
  - The item type may not be detected automatically. In that case, specify the item type in IJ Scan Utility and scan.

Faxing

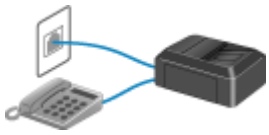

Preparing for Faxing

Registering Recipients

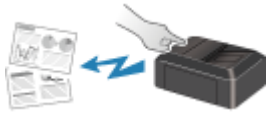

Sending Faxes Using Operation Panel of Printer

Sending Faxes from Computer (Windows)

Sending Faxes from Computer (macOS)

Receiving Faxes

Other Useful Fax Functions

Preparing for Faxing

Connect the printer to the telephone line and set up the printer before using the faxing functions. Then specify the basic setting such as sender information, date/time, and daylight saving time.

Important

- If the Power Disconnects:

  If there is a power failure or if you accidentally unplug the power cord, the date/time settings will be reset.

  - The settings for user information and directory will be retained.
  - All faxes stored in the printer's memory, such as unsent and received faxes, will be lost.

  If the power disconnects, the following will apply:

  - You will not be able to send or receive faxes, make copies, or scan originals.
  - When you are connecting the telephone, whether or not you can use it depends upon your telephone line or telephone.

Setting Up Printer

The printer must be set up depending on your telephone line and use of the faxing function.

All Setup

FAX Setup Guide

Individual Setup

Step1 Connecting Telephone Line

Step2 Setting Telephone Line Type

Step3 Setting Receive Mode

Step4 Setting Sender Information

Note

- You can set the fax setting according to the instruction on the touch screen.

  ➡ Easy setup

  If you set up according to the instruction on the touch screen, the receive mode is set to **TEL priority mode** or **FAX only mode**. To receive faxes with **DRPD** or **Network switch**, change the receive mode.

➡ Setting Receive Mode

Connecting Telephone Line

The connection method differs depending on your telephone line.

- If you connect the printer to wall telephone line directly/If you connect the printer with the xDSL splitter:
  - ➡ Basic Connection (Connecting with General Telephone line)
- If you connect the printer to another line such as an xDSL:
  - ➡ Connecting Various Lines

If the connection is incorrect, the printer cannot send/receive faxes. Connect the printer correctly.

Important

- Do not connect fax devices and/or telephones in parallel (US and Canada only).

  If two or more fax devices and/or telephones are connected in parallel, the following problems may occur and the printer may not operate properly.

  - If you pick up the handset of the telephone that is connected in parallel during fax transmission or reception, the fax image may be corrupted or a communication error may occur.
  - Such services as Caller ID, etc. may not operate properly on the telephone.

  If you cannot avoid parallel connections, set the receive mode to **TEL priority mode**, understanding that the above problems may occur. You will only be able to receive faxes manually.

Basic Connection (Connecting with General Telephone line)

Make sure that the printer is turned off, connect one end of supplied telephone line cable to the telephone line jack near the "LINE" mark of the printer, then connect the other end to the telephone line jack on the wall or to the telephone line jack of the xDSL splitter.

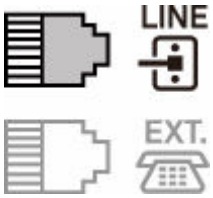

When you connect the telephone to the printer, make sure that the printer is turned off, connect one end of the modular cable to the external device jack near the "EXT." mark of the printer, then connect the other end to the telephone line jack of the telephone.

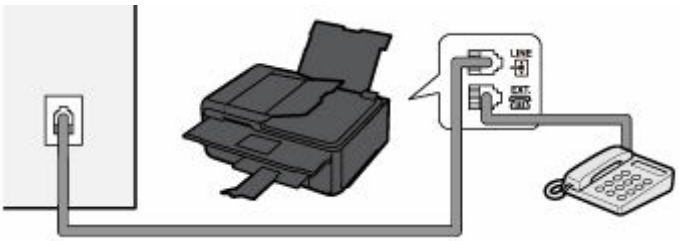

Important

- Be sure to connect the telephone line before the printer is turned on.

  If you connect the telephone line when the printer is turned on, turn the printer off and unplug the power cord. Wait for 1 minute then connect the telephone line and power plug.

Note

- Refer to Rear View for the position of the telephone line jack and the external device jack.
- Before connecting a telephone or answering machine, remove the Telephone connector cap.
- **For users in the UK:**

  If the connector of the external device cannot be connected to the jack on the printer, you will need to purchase a B.T. adapter to connect as follows:

  Attach the B.T. adapter to the modular cable connecting the external device, then connect the B.T. adapter to the external device jack.

Connecting Various Lines

This section introduces how to connect various lines.

These are examples and could not be guaranteed to suit every connecting condition. For details, refer to the instruction manual supplied with the network device (control devices such as an xDSL (Digital Subscriber Line) modem or terminal adapter) you are connecting to this printer.

Note

- xDSL is the generic term for the high speed digital communication technology with telephone line such as ADSL/HDSL/SDSL/VDSL.

- **Connecting to an Internet Telephone**

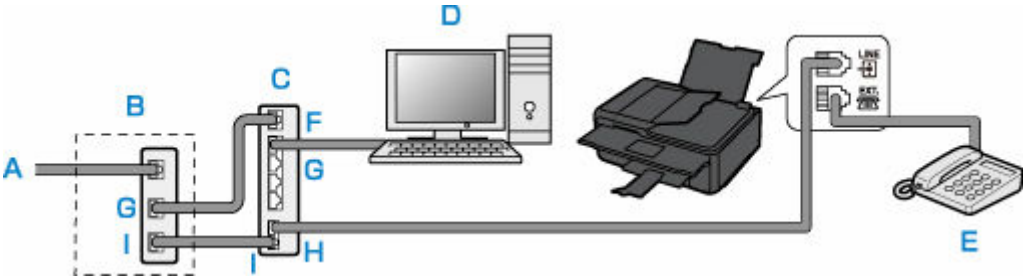

A: Digital Subscriber Line
B: xDSL modem (splitter may not be built-in to the modem)
C: Broadband router compatible with Internet Telephone
D: Computer
E: Telephone or answering machine
F: WAN (Wide Area Network) port
G: LAN (Local Area Network) port
H: TEL port
I: LINE port

* Port configurations and names may vary depending on the product.

Note

- When connecting to the xDSL line, select the same line type as you are subscribing to in **Telephone line type**.

  ➡ Setting Telephone Line Type

- **Connecting to an xDSL**

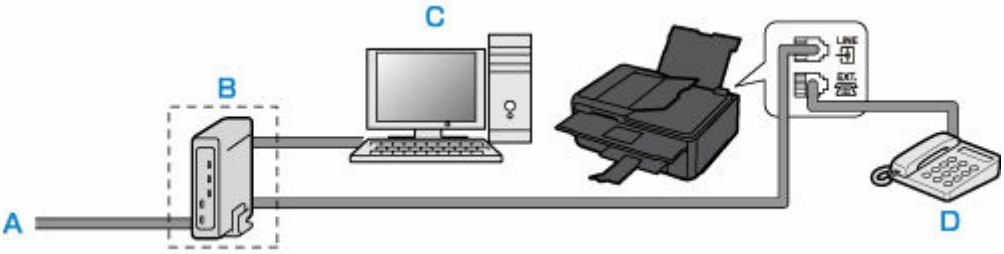

A: Analog Subscriber Line
B: xDSL modem (splitter may not be built-in to the modem)
C: Computer
D: Telephone or answering machine

Important

- When the splitter is not built-in to the xDSL modem, do not branch the telephone line before the splitter (wall side). And also, do not connect splitters in parallel. The printer may not be able to operate properly.

Note

- When connecting to the xDSL line, select the same line type as you are subscribing to in **Telephone line type**.

➡ Setting Telephone Line Type

- **Connecting to an ISDN Line**

  For details on ISDN (Integrated Service Digital Network) connection and settings, refer to the manuals supplied with your terminal adapter or dial-up router.

Setting Telephone Line Type

Before using your printer, make sure you set the correct telephone line type for your telephone line. If you are unsure of your telephone line type, contact your telephone company. For xDSL or ISDN connections, contact the telephone company or service provider to confirm your line type.

Important

- **For users in China:**

  After plugging the power cord and turning on the printer, the telephone line type is selected automatically. However, if the printer is connected to the control device such as an xDSL modem or terminal adapter, the telephone line type may not be selected correctly.

  In this case, set the line type manually.

  For details on how to set the Telephone line type manually in China:

  ➡ Setting the Telephone Line Type Manually in China

Note

- **Telephone line type** will not appear in countries or regions where **Rotary pulse** is not supported.
- You can print USER'S DATA LIST to check the current setting.

  ➡ Summary of Reports and Lists

1. Check that printer is turned on.

2. Select **Setup** on the HOME screen.

   ➡ Using Touch Screen

3. Select **Device settings**.

4. Select **FAX settings**.

5. Select **FAX user settings**.

6. Select **Telephone line type**.

7. Select a telephone line type.

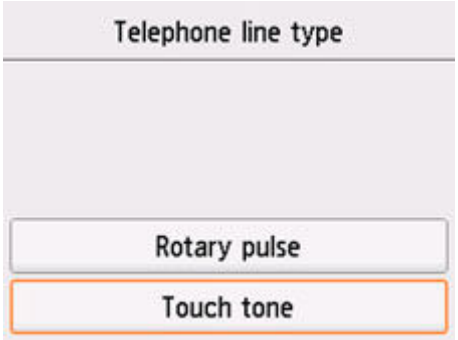

Rotary pulse

Select when your telephone line type is pulse dialing.

Touch tone

Select when your telephone line type is tone dialing.

Setting the Telephone Line Type Manually in China

This section describes the procedure to set the telephone line type manually in China.

1. Check that printer is turned on.

2. Select **Setup** on the HOME screen.

   ➡ Using Touch Screen

3. Select **Device settings**.

4. Select **FAX settings**.

5. Select **FAX user settings**.

6. Select **Telephone line auto selection**.

   The current telephone line type is displayed.

7. Check current telephone line type, and then select **OK**.

   Note

   - If you do not need to change the telephone line type, press the **HOME** button to return to the HOME screen.

8. Select **OFF**.

9. Select a telephone line type.

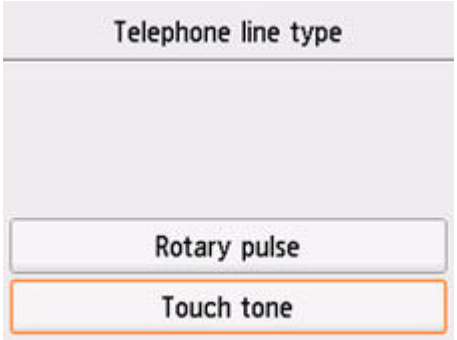

Rotary pulse

Select when your telephone line type is pulse dialing.

Touch tone

Select when your telephone line type is tone dialing.

Setting Receive Mode

Set the receiving operation (receiving mode).

For details on how to set the receive mode:

➡ Setting Receive Mode

You can select the appropriate mode.

For details on the selectable receive mode:

➡ About Receive Mode

For details on the advanced settings of the receive mode:

➡ Advanced Settings of Receive Mode

Note

- The receiving operation procedure varies depending on the selected receive mode.

  For details on receiving method depending on each receive mode:

  ➡ Receiving Faxes

- If you want to use a single telephone line for faxes and voice calls, you need to connect a telephone or an answering machine to the external device jack of this printer.

  For details on how to connect the telephone or the answering machine to the printer:

  ➡ Basic Connection (Connecting with General Telephone line)

Setting Receive Mode

This section describes the procedure to select the receive mode.

1. Check that printer is turned on.

2. Select **FAX** on the HOME screen.

   ➡ Using Touch Screen

3. Select **Function list**.

   The **Function list** screen is displayed.

4. Select **Receive mode settings**.

5. Select a receive mode, and then select **OK**.

   Note

   - By selecting **Advanced**, you can specify the advanced settings of each receive mode.

     For details on the advanced settings of the receive mode:

     ➡ Advanced Settings of Receive Mode

- For details on the receive mode:

  ➡ About Receive Mode

- **DRPD** is available only in the US and Canada.
- **Network switch** may not be available depending on the country or region of purchase.
- Refer to Receiving Faxes for information on receiving faxes or the procedure for each receive mode.

About Receive Mode

You can select the receive mode suitable for your fax use conditions: whether you use a dedicated line for fax, etc.

- **TEL priority mode**

  Select when mainly receiving voice calls (with a telephone or answering machine connected to the printer).

  Receiving operation:

  1. When a call incomes, the telephone will ring.
  2. Pick up the handset.

     If the call is a voice call, talk on the telephone.

     If the call is a fax, hang up the handset after the printer starts receiving the fax.

  Note

  - The telephone may not ring when a call incomes even if it is connected to the printer, depending on the type or settings of the telephone.

- **DRPD or Network switch**

  Select when receiving voice calls (with a telephone or answering machine connected to the printer) and subscribing to a ring pattern detection service provided by your telephone company.

  Receiving operation:

  1. When a call incomes, the telephone will ring.
  2. The printer detects a fax call by the fax ring pattern.

     If the call is a fax, the printer will receive the fax automatically.

     If the printer does not detect the fax ring pattern, the telephone will continue ringing.

  Note

  - The telephone may not ring when a call incomes even if it is connected to the printers, depending on the type or settings of the telephone.

- **FAX only mode**

  Select when not receiving voice calls.

  Receiving operation:

  1. When a fax incomes, the printer will receive the fax automatically.

Advanced Settings of Receive Mode

You can specify the advanced settings of each receive mode.

- **Advanced setting in TEL priority mode**

  You can specify the following setting items.

  - **Manual/auto switch: ON**/**Manual/auto switch: OFF**

    If you select **Manual/auto switch: ON**, the printer automatically receives faxes after the external device rang a specified length of time.

    You can specify the length of time until automatic reception is started.

  - **RX start time**

    You can specify the length of time until automatic reception is started when **Manual/auto switch: ON** is selected. Specify the length of time and select **OK**.

  - **User-friendly RX: ON**/**User-friendly RX: OFF**

    If you select **User-friendly RX: ON**, the printer automatically switches from telephone calling to fax reception by detecting the fax signal (CNG signal) when you lift the handset of the telephone or the answering device answers. When you have an answering device connected to the printer, select **User-friendly RX: ON** to switch to fax reception automatically after the answering device answers.

    If you select **User-friendly RX: OFF**, the printer does not switch from telephone calling to fax reception automatically even if the printer detects the fax signal (CNG signal). Select **User-friendly RX: OFF** if you want the printer not to switch automatically during a call.

  Note

  - If you subscribe to Duplex Ringing service in Hong Kong, the number of times the external device rings specified with **Ring count** in **FAX only mode** is available in **TEL priority mode**.

    If you want to specify the number of times the external device rings in **TEL priority mode**, select **FAX only mode** on the **Receive mode settings** screen, specify the number of times the external device rings with **Ring count**, and then switch to **TEL priority mode** in **Receive mode settings**.

  - If you subscribe to Duplex Ringing service in Hong Kong, we recommend that you select **Manual/auto switch: OFF**.

- **Advanced setting in FAX only mode**

  You can specify the following setting item.

  - **Ring count**

    You can specify the number of times the external device rings when incoming.

    Specify the number of time and select **OK**.

- **Advanced setting in DRPD**

  You can specify the following setting items.

  - Ring pattern (**Normal ring**/**Double ring**/**Short-short-long**/**Short-long-short**)

    Sets the distinctive ring pattern of a call that the printer assumes is a fax call.

If you subscribe to a DRPD service, set the ring pattern to match the pattern assigned by your telephone company.

➡ Setting DRPD Ring Pattern (US and Canada only)

- **Ring count**

  You can specify the number of times the external device rings when incoming.

  Specify the number of time and select **OK**.

- **Advanced setting in Network switch**

  You can specify the following setting item.

  - **Ring count**

    You can specify the number of times the external device rings when incoming.

    Specify the number of time and select **OK**.

Setting the DRPD Ring Pattern (US and Canada only)

If you have subscribed to a Distinctive Ring Pattern Detection (DRPD) service provided by your telephone company, your telephone company will assign two or more telephone numbers with distinctive ring patterns to your single telephone line, allowing you to have different numbers for fax calls and voice calls using only one telephone line. Your printer will automatically monitor the ring pattern, and will automatically receive the fax if the ring pattern is a fax call.

To use DRPD, follow the procedure below to set the fax ring pattern that matches the pattern assigned by your telephone company.

Note

- Contact your local telephone company for detailed information on this service.

1. Check that printer is turned on.

2. Select **FAX** on the HOME screen.

   ➡ Using Touch Screen

3. Select **Function list**.

   The **Function list** screen is displayed.

4. Select **Receive mode settings**.

5. Select **DRPD**.

6. Select **Advanced**.

7. Select ring pattern that your telephone company assigned to your fax number.

8. Specify number of time and select **OK**.

9. Select **OK**.

   The **Function list** screen is displayed.

Setting Sender Information

You can set the sender information such as date/time, unit name, and unit fax/telephone number.

- About Sender Information
- Setting Date and Time
- Setting Daylight Saving Time (Summer Time)
- Registering User Information

About Sender Information

If the unit name and unit fax/telephone number are registered, they are printed with date and time as sender information on the recipient's fax.

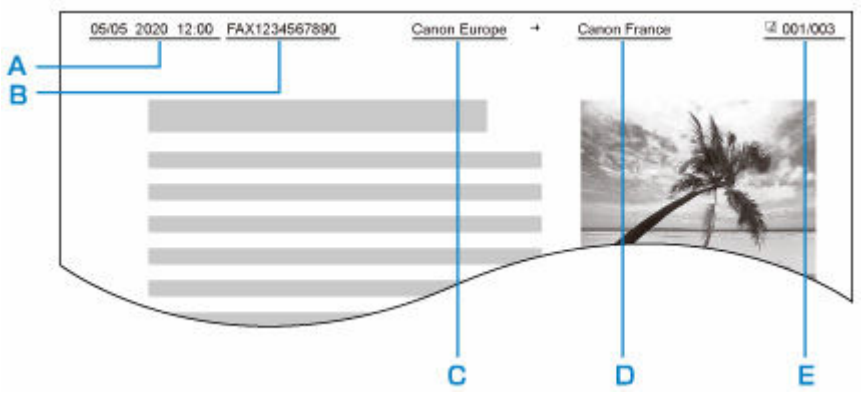

A: Date and time of transmission
B: Unit fax/telephone number
C: Unit name
D: The registered recipient's name is printed when sending faxes.
E: Page number

Note

- You can print USER'S DATA LIST to confirm the sender information you have registered.

  Summary of Reports and Lists

- When sending faxes in black & white, you can select whether to print the sender information inside or outside the image area.

  Specify the setting on **TTI position** in **Advanced FAX settings** under **FAX settings**.

  Advanced FAX settings

- You can select the date print format from three formats: **YYYY/MM/DD**, **MM/DD/YYYY**, and **DD/MM/YYYY**.

  Select the date print format on **Date display format** under **Other printer settings**.

  Other printer settings

Setting Date and Time

This section describes the procedure to set the date and time.

1. Check that printer is turned on.

2. Select **Setup** on the HOME screen.

   ➡ Using Touch Screen

3. Select **Device settings**.

4. Select **Other printer settings**.

5. Select **Date/time settings**.

6. Set date.

   1. Select a setting item to change.

   2. Select number to enter.

   Enter only the last two digits of the year.

   3. Select **OK**.

   4. Select **OK** again when all settings are completed.

7. Set time.

   1. Select a setting item to change.

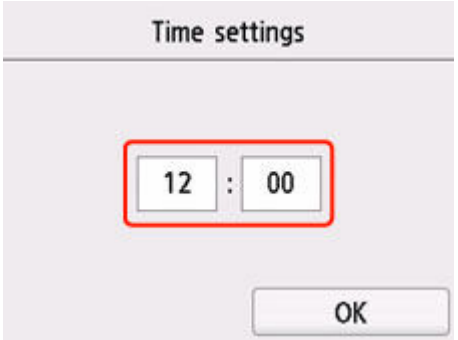

2. Select number to enter.

Enter the date and time in 24-hour format.

3. Select **OK**.
4. Select **OK** again when all settings are completed.

Setting Daylight Saving Time (Summer Time)

Some countries adopt the daylight saving time (summer time) system that shifts the clock time forward at certain periods of the year.

You can set your printer to automatically change the time by registering the date and time that daylight saving time (summer time) begins and ends.

Important

- Not all the latest information of all countries or regions is applied for **Daylight saving time setting** by default. You need to change the default setting according to the latest information of your country or region.

Note

- This setting may not be available depending on the country or region of purchase.

1. Check that printer is turned on.

2. Select **Setup** on the HOME screen.

   ➡ Using Touch Screen

3. Select **Device settings**.

4. Select **Other printer settings**.

5. Select **Daylight saving time setting**.

6. Select **ON**.

   To disable summer time, select **OFF**.

7. Set date and time when summer time starts.

   1. Set date when summer time starts.

      Select a setting item to change, and then specify the setting. Select **OK** again when all settings are completed.

      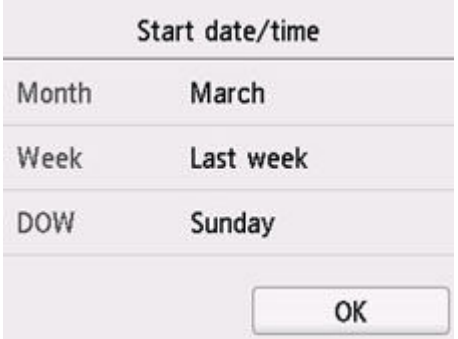

   2. Set time (in 24-hour format) when summer time starts.

      Select a setting item to change, and then specify the setting. Select **OK** again when all settings are completed.

      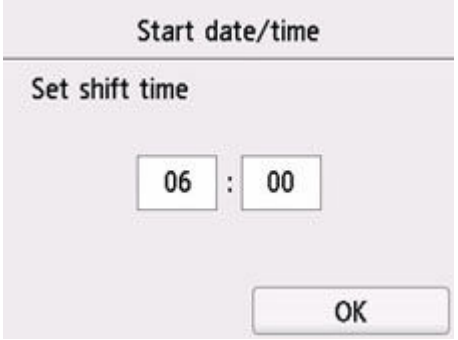

8. Set date and time when summer time ends.

   1. Set date when summer time ends.

      Select a setting item to change, and then specify the setting. Select **OK** again when all settings are completed.

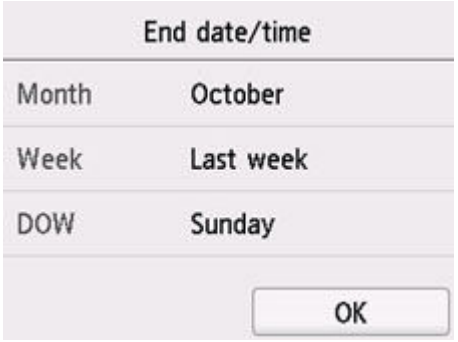

2. Set time (in 24-hour format) when summer time ends.

   Select a setting item to change, and then specify the setting. Select **OK** again when all settings are completed.

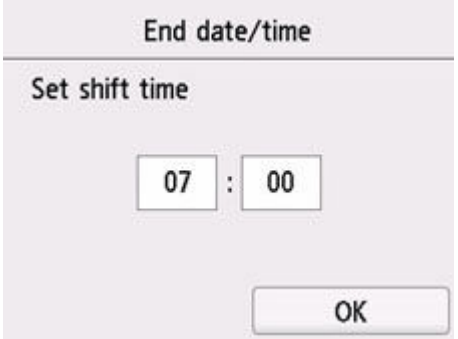

9. Press **HOME** button to return to HOME screen.

Registering User Information

This section describes the procedure to register the user information.

Note

- Before sending a fax, be sure to enter your name and fax/telephone number in **Unit name** and **Unit TEL** on the **User information settings** screen (for US only).

1. Check that printer is turned on.

2. Select **Setup** on the HOME screen.

   ➡ Using Touch Screen

3. Select **Device settings**.

4. Select **FAX settings**.

5. Select **FAX user settings**.

6. Select **User information settings**.

The screen to register the unit name and the unit fax/telephone number is displayed.

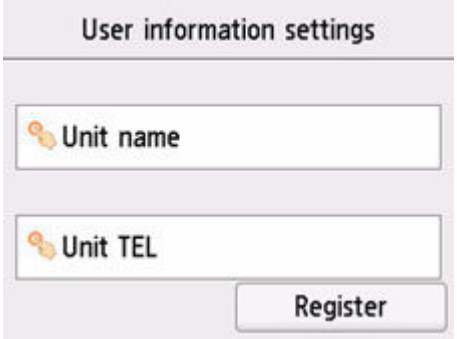

7. Enter unit name.

   1. Select entry field under **Unit name**.

      The screen to enter the character is displayed.

   2. Enter unit name.

   3. Select **OK**.

Note

- You can enter the name up to 24 characters, including spaces.

8. Enter unit fax/telephone number.

   1. Select entry field under **Unit TEL**.

      The screen to enter the number is displayed.

   2. Enter unit fax/telephone number.

3. Select **OK**.

Note

- You can enter the fax/telephone number up to 20 digits, including spaces.

9. Select **Register** to finalize registration.

Registering Recipients

- Registering Recipients Using Operation Panel of Printer
- Registering Recipients Using Speed Dial Utility2 (Windows)
- Registering Recipients Using Speed Dial Utility2 (macOS)

Registering Recipients Using Operation Panel of Printer

Registering recipients in the printer's directory in advance allows you to dial fax/telephone numbers simply.

The following methods to register are available:

- Recipient registration

  Registering the recipient's fax/telephone number and name allows you to send a fax by selecting a registered recipient in the printer directory.

  ➡ Registering Fax/Telephone Number of Recipients

- Group dial registration

  You can combine two or more recipients registered in advance into a group. You can send the same document to all the registered recipients in the group.

  ➡ Registering Recipients in Group Dial

You can register up to 100 recipients in total of individual recipients and group dials.

Note

- To change the registered information of the recipient or the group dial, see Changing Registered Information.
- To delete the registered information of the recipient or the group dial, see Deleting Registered Information.
- To print a list of the recipient's fax/telephone numbers and names registered, see Printing List of Registered Destinations.
- You can register, change, or delete the registered information of the recipient or the group dial using Speed Dial Utility on the computer.
  - For Windows:

    ➡ Registering Recipients Using Speed Dial Utility2 (Windows)

  - For macOS:

    ➡ Registering Recipients Using Speed Dial Utility2 (macOS)

Registering Fax/Telephone Number of Recipients

Before you can use the printer's directory, you need to register the recipients' fax/telephone numbers. Follow the procedure below to register the recipients' fax/telephone numbers.

1. Check that printer is turned on.

2. Select **FAX** on the HOME screen.

   ➡ Using Touch Screen

   The Fax standby screen is displayed.

3. Select **Function list**.

   The **Function list** screen is displayed.

4. Select **TEL number registration**.

5. Select **Directory registration**.

   The screen to select an ID number is displayed.

Note

- If you already registered the recipients, the recipients' name is displayed next to the ID number. If you already registered the group dial, the icon and the group name are displayed next to the ID number.

6. Select an unregistered ID number.

Note

- If you already registered the recipients and they are displayed by name, select **Switch view**. The registered recipients are displayed by ID number.
- If you select **New entry**, an unregistered ID number will be selected in numerical order.

7. Select **Add recipient**.

8. Select a registration method.

9. Register recipients' fax/telephone number.

Register the recipients' fax/telephone number depending on the registration method selected.

- **By entering the number**

  The screen to register the recipient's fax/telephone number and name is displayed. Go to next step.

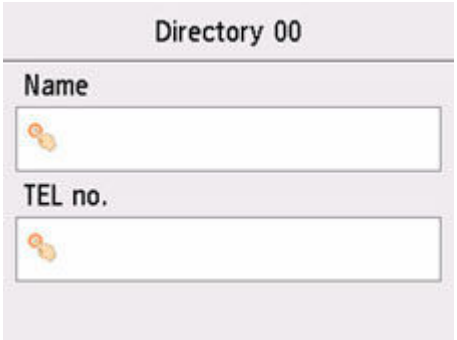

- **From outgoing call log**

  When you select this registration method, the screen to select the fax/telephone number from the outgoing call logs is displayed.

  Selecting a fax/telephone number from the outgoing call logs, the screen to register the recipient's fax/telephone number and name is displayed. Go to next step.

- **From incoming call log**

  When you select this registration method, the screen to select the fax/telephone number or the name from the incoming call logs is displayed.

  Select a fax/telephone number or name from the incoming call logs, the screen to register the recipient's fax/telephone number and name is displayed. Go to next step.

Note

- This registration method may not be available depending on the country or region of purchase.

10. Enter recipient's name.

If you select **From incoming call log** as a registration method, the recipient's name may be already entered. If you do not change the name, go to next step.

1. Select entry field of name.

   The screen to enter the character is displayed.

2. Enter recipient's name.

3. Select **OK**.

Note

- You can enter the name up to 16 characters, including spaces.

11. Enter recipient's fax/telephone number.

If you select a fax/telephone number on **From outgoing call log** or **From incoming call log**, the fax/telephone number is already entered. If you do not change the fax/telephone number, go to next step.

1. Select entry field of fax/telephone numbers.

   The screen to enter the number is displayed.

2. Enter recipient's fax/telephone number.

3. Select **OK**.

Note

- You can enter the fax/telephone number up to 60 digits (40 digits for the US, Canada, Korea and some regions of Latin America), including spaces.

- When **Telephone line type** in **FAX user settings** under **FAX settings** is set to **Rotary pulse**, you can enter a tone ("T") by selecting the Tone key.

12. Select **Register** to finalize registration.

Note

- To register another recipient's number and name, select an unregistered ID number and operate in the same procedure.
- You can check the recipient's numbers and names you have registered by printing RECIPIENT TELEPHONE NUMBER LIST.

➡ Printing List of Registered Destinations

Registering Recipients in Group Dial

If you register two or more registered recipients to a group dial, you can send the same document successively to all recipients registered to the group dial.

1. Check that printer is turned on.

2. Select **FAX** on the HOME screen.

   ➡ Using Touch Screen

   The Fax standby screen is displayed.

3. Select **Function list**.

   The **Function list** screen is displayed.

4. Select **TEL number registration**.

5. Select **Directory registration**.

   The screen to select an ID number is displayed.

Note

- If you already registered the recipients, the recipients' name is displayed next to the ID number. If you already registered the group dial, the icon and the group name are displayed next to the ID number.

6. Select an unregistered ID number.

Note

- If you already registered the recipients and they are displayed by name, select **Switch view**. The registered recipients are displayed by ID number.
- If you select **New entry**, an unregistered ID number will be selected in numerical order.

7. Select **Group dial registration**.

   The screen to register the group name and the member of the group is displayed.

8. Enter group name.

1. Select entry field of group name.

The screen to enter the character is displayed.

2. Enter group name.

3. Select **OK**.

Note

- You can enter the name up to 16 characters, including spaces.

9. Register registered recipient as a member of group dial.

1. Select **Add member**.

The printer's directory is displayed.

Display by name

Display by ID number

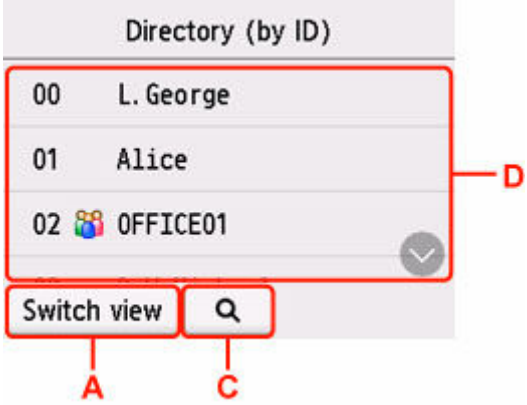

A: Select to switch the display by name and by ID number.

B: Select to display the screen to select an initial. You can search the registered recipient by initial.

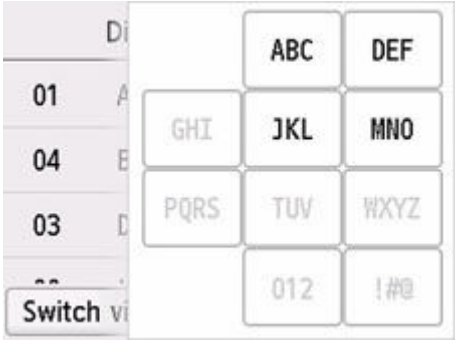

By selecting the initial, the registered recipients are displayed in alphabetical order from the selected character.

C: Select to display the screen to select an ID number of the registered recipient. You can search the registered recipient by ID number.

By enter the ID number and selecting **OK**, the registered recipients are displayed in order from the recipient of the ID number selected.

D: The recipients that can be registered are displayed.

2. Select a recipient to register as group member.

The member to register is displayed on the list.

Note

- To delete the recipient from the group dial, select a recipient that you want to delete from the list. After the confirmation screen is displayed, select **Yes** to delete the recipient from the group dial.

3. To add another member, select **Add member** again.

   The printer's directory is displayed.

4. Select a recipient to register as group member.

   The member to register is displayed on the list.

   Repeat the procedure to register another member to the same group dial.

10. Select **Complete** to finalize registration.

Note

- To register another group, select an unregistered ID number and operate in the same procedure.
- You can check the recipients you have registered to the group dial by printing GROUP DIAL TELEPHONE NO. LIST.

  ➡ Printing List of Registered Destinations

Changing Registered Information

To change information registered for recipient and group dial, follow the procedure below.

1. Check that printer is turned on.

2. Select **FAX** on the HOME screen.

   ➡ Using Touch Screen

   The Fax standby screen is displayed.

3. Select **Function list**.

   The **Function list** screen is displayed.

4. Select **TEL number registration**.

5. Select **Directory registration**.

6. Select a recipient or a group dial to change.

7. Change registered information.

   - To change an individual recipient:
     1. Select **Edit recipient**.

        The registered information screen of the selected recipient is displayed.
     2. Select entry field of name or entry field of fax/telephone numbers.

        The each edit screen is displayed.
     3. Change name or fax/telephone numbers.
     4. Select **OK**.

        The touch screen returns to the registered information screen.
     5. Select **Register**.
   - To change a group dial:
     1. Select **Edit group dial**.

        The registered information screen of the group dial is displayed.
     2. To change group name, select entry field of name.

        When edit screen of group name is displayed, change the group name, and then select **OK**.
     3. To add member, select **Add member**.

        When the printer's directory is displayed, select the recipient you want to add.
     4. To delete member, select recipient on list.

When the confirmation screen is displayed, select **Yes** to delete the recipient from the group dial.

5. Select **Complete** to finalize changing.

Deleting Registered Information

To delete information registered for recipient and group dial, follow the procedure below.

1. Check that printer is turned on.

2. Select **FAX** on the HOME screen.

   ➡ Using Touch Screen

   The Fax standby screen is displayed.

3. Select **Function list**.

   The **Function list** screen is displayed.

4. Select **TEL number registration**.

5. Select **Directory registration**.

6. Select a recipient or a group dial to delete.

7. Delete registered information.

   - To delete an individual recipient:
     1. Select **Delete recipient**.
     2. When confirmation screen is displayed, select **Yes** to delete.
   - To delete a group dial:
     1. Select **Delete group dial**.
     2. When confirmation screen is displayed, select **Yes** to delete.

Printing List of Registered Destinations

You can print a list of the fax/telephone numbers and can keep it near the printer to refer to when dialing.

1. Check that printer is turned on.

2. Load paper.

3. Select **FAX** on the HOME screen.

   ➡ Using Touch Screen

   The Fax standby screen is displayed.

4. Select **Function list**.

   The **Function list** screen is displayed.

5. Select **Print reports/lists**.

6. Select **Directory list**.

7. Select an item to print.

   - If you selected **Recipient**:

     The confirmation screen asking if you print the list alphabetically by name is displayed.

     If you select **Yes**: Prints RECIPIENT TELEPHONE NUMBER LIST in alphabetical order.

     If you select **No**: Prints RECIPIENT TELEPHONE NUMBER LIST in the order of the ID number.

   - If you selected **Group dial**:

     The printing confirmation screen is displayed. Select **Yes** to print GROUP DIAL TELEPHONE NO. LIST.

Registering Recipients Using Speed Dial Utility2 (Windows)

About Speed Dial Utility2

Speed Dial Utility2 is a utility for forwarding the telephone directory registered on the printer to a computer and registering/changing it on the computer. In addition, you can register the telephone directory edited on the computer to the printer. You can also save them on the computer as a backup.

For safety reasons, it is recommended that you backup the registered data on the computer using Speed Dial Utility2.

- Starting Up Speed Dial Utility2
- Speed Dial Utility2 Dialog box
- Saving Registered Telephone Directory on Printer to Your Computer
- Registering a Fax/telephone Number Using Speed Dial Utility2
- Changing a Fax/telephone Number Using Speed Dial Utility2
- Deleting a Fax/telephone Number Using Speed Dial Utility2
- Changing Sender Information Using Speed Dial Utility2
- Registering/Changing Rejected Number Using Speed Dial Utility2
- Registering Telephone Directory Has been Saved on Your Computer to Printer

Starting Up Speed Dial Utility2

Important

- Before starting up Speed Dial Utility2, make sure that the printer is connected to the computer correctly.
- Do not plug in or unplug any cables while the printer is in operation, or when the computer is in sleep or standby mode.
- If your printer is compatible with LAN connection, make sure that the printer is connected to the computer with LAN connection to use Speed Dial Utility2 via LAN connection.
- The password entry screen may appear during startup or operation. If it appears, enter the administrator password, and then click **OK**. If you do not know the administrator password, contact the administrator of the printer.

Follow the procedure below to start up Speed Dial Utility2.

1. Make sure printer is turned on.

2. Start up Speed Dial Utility2.

   - For Windows 11 or Windows 10, click **Start** button and select **All apps**, **Canon Utilities**, and then **Speed Dial Utility2**.
   - For Windows 8.1 or Windows 8, select **Speed Dial Utility2** on the **Start** screen to start Speed Dial Utility2. If **Speed Dial Utility2** is not displayed on the **Start** screen, select the **Search** charm, and then search for "Speed Dial Utility2".
   - For Windows 7 or Windows Vista, click **Start** and select **All programs**, **Canon Utilities**, **Speed Dial Utility2**, and then **Speed Dial Utility2**.

   Speed Dial Utility2 starts up.

Note

- You can also start up Speed Dial Utility2 from Quick Utility Toolbox.

Speed Dial Utility2 Dialog box

The following items are on the **Speed Dial Utility2** dialog box.

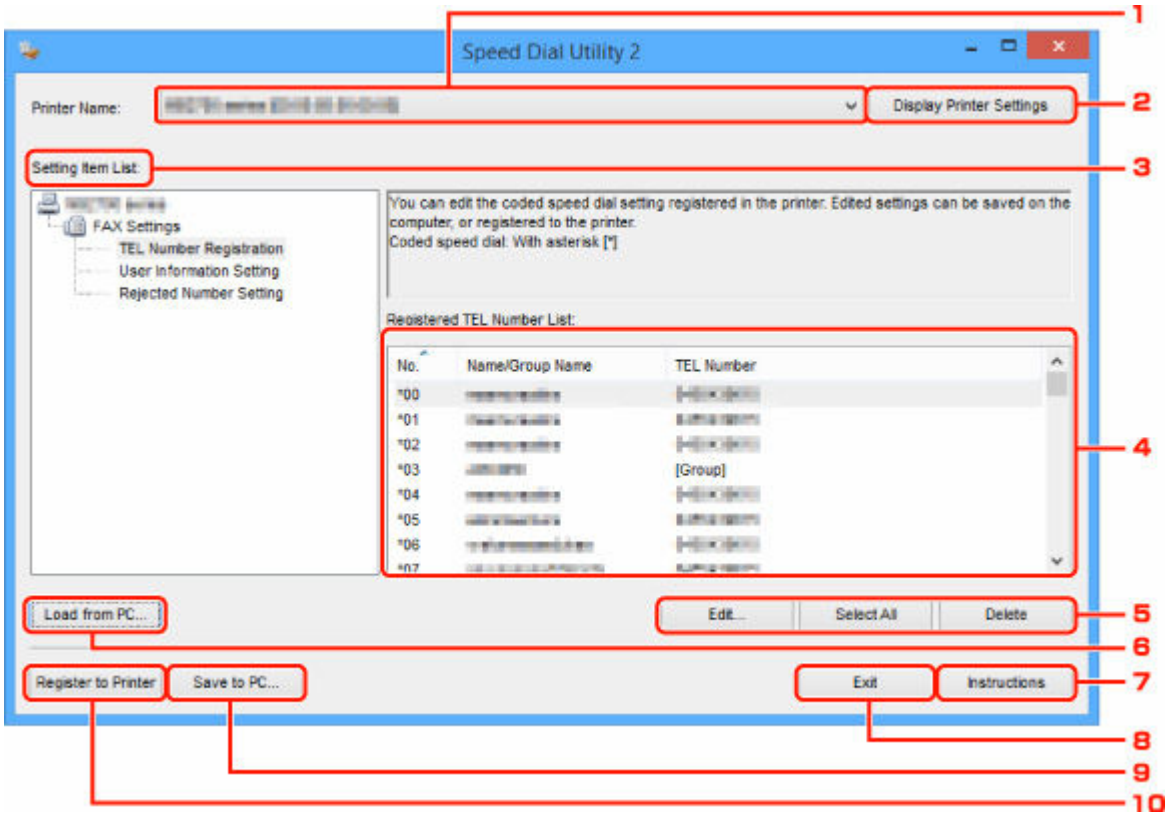

1. **Printer Name:**

   Selects the printer for editing the telephone directory using Speed Dial Utility2.

   Behind printer name, printer's MAC address is displayed.

   Note

   - For checking printer's MAC address, refer to "Checking Network Information" for your model from Home of the Online Manual.
   - For printer that supports both wireless LAN connection and wired LAN connection, MAC address of wired LAN connection is displayed regardless of the connection method.

2. **Display Printer Settings**

   Loads the telephone directory registered on the printer that selected for **Printer Name:** into Speed Dial Utility2.

3. **Setting Item List:**

   Selects a setting item for editing. Choose one item from **TEL Number Registration**, **User Information Setting**, and **Rejected Number Setting**.

4. Registered information list

   Displays the registered information selected for **Setting Item List:**.

Note

- By clicking on the item name, you can sort the display order.

5. **Edit.../Select All/Delete**

   Edits the item that selected for **Setting Item List:**, or deletes the item, or selects all the items.

   When multiple items on the registered information list are selected, you cannot use the **Edit...** button.

6. **Load from PC...**

   Displays the telephone directory saved on the computer.

7. **Instructions**

   Displays this guide.

8. **Exit**

   Quits Speed Dial Utility2. Information registered or edited using Speed Dial Utility2 is neither saved on the computer nor registered on the printer.

9. **Save to PC...**

   Saves the telephone directory edited using Speed Dial Utility2 on the computer.

10. **Register to Printer**

    Registers the telephone directory edited using Speed Dial Utility2 to the printer.

Saving Registered Telephone Directory on Printer to Your Computer

Follow the procedure below to save the telephone directory (includes recipients' name, recipients' fax/telephone number, group dial, user's name, user's fax/telephone number, and rejected numbers) that registered on the printer to the computer.

1. Start up Speed Dial Utility2.
2. Select a printer from **Printer Name:** list box, and then click **Display Printer Settings**.
3. Click **Save to PC...**.
4. Enter file name on displayed screen, and then click **Save**.

Note

- The data of the telephone directory (RSD file, *.rsd) can be imported to other printer.

➡ Registering Telephone Directory Has been Saved on Your Computer to Printer

Registering a Fax/telephone Number Using Speed Dial Utility2

Follow the procedure below to register fax/telephone numbers.

Note

Before you register fax/telephone numbers using Speed Dial Utility2, make sure that no fax operations are in progress.

1. Start up Speed Dial Utility2.

2. Select a printer from **Printer Name:** list box, and then click **Display Printer Settings**.

3. Click **TEL Number Registration** from **Setting Item List:**.

   The list of registered fax/telephone numbers is displayed.

4. Select an unoccupied code from list, and then click **Edit...**.

   The **Individual or Group Selection** dialog box is displayed.

5. Click **Register individual TEL number** or **Register group dial**, and then click **Next...**.

   - If **Register individual TEL number** is selected:

     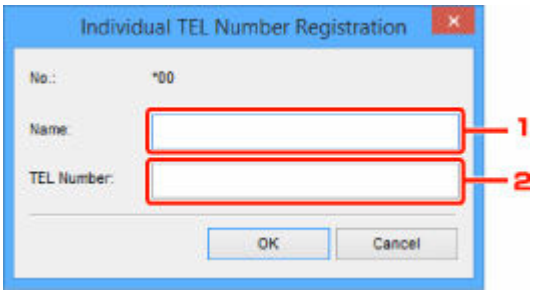

     1. Enter name.
     2. Enter fax/telephone number.

   - If **Register group dial** is selected:

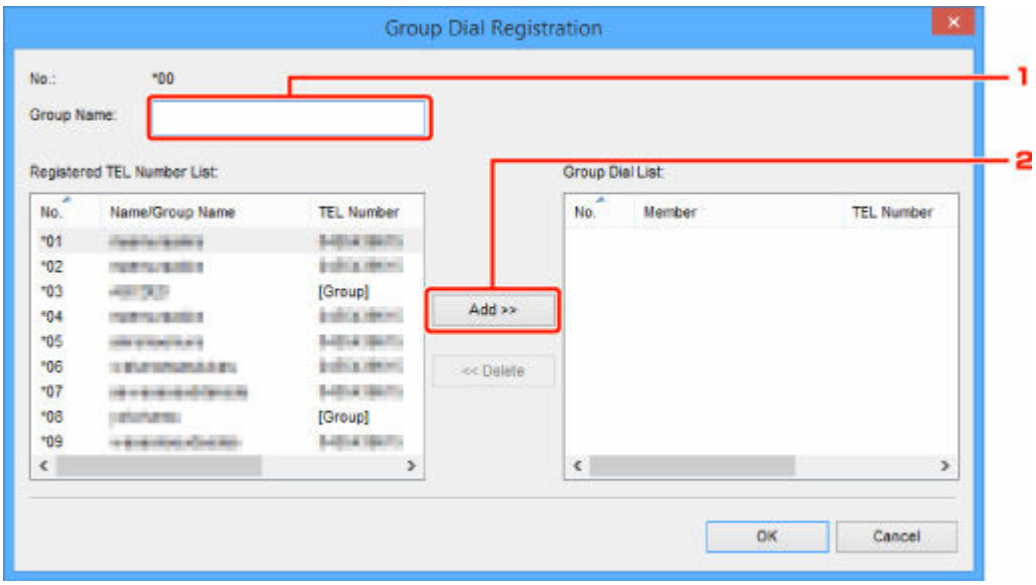

1. Enter group name.
2. Select a code you want to add to group dial, and then click **Add >>**.

Note

- You can only add the numbers that have already been registered.

6. Click **OK**.

To continue registering fax/telephone numbers or a group dial, repeat steps 4 to 6.

- To save the registered information on the computer.
  1. Click **Save to PC...**.
  2. Enter file name on displayed screen, and then click **Save**.
- To register the registered information to the printer:
  1. Click **Register to Printer**.
  2. When message appears, check it and click **OK**.

     The information is registered to the printer.

Changing a Fax/telephone Number Using Speed Dial Utility2

Follow the procedure below to change fax/telephone numbers.

Note

- Before you change fax/telephone numbers using Speed Dial Utility2, make sure that no fax operations are in progress.

1. Start up Speed Dial Utility2.

2. Select a printer from **Printer Name:** list box, and then click **Display Printer Settings**.

3. Click **TEL Number Registration** from **Setting Item List:**.

   The list of registered fax/telephone numbers is displayed.

4. Select a code to change from list, and then click **Edit...**.

   - If an individual fax/telephone number is selected:

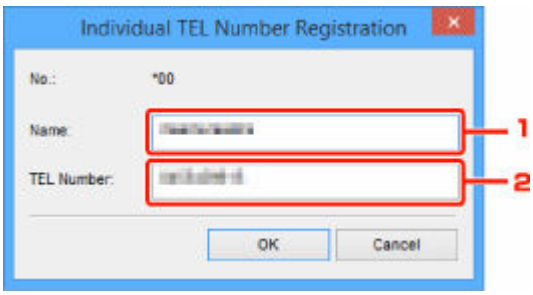

     1. Enter a new name.
     2. Enter a new fax/telephone number.

   - If a group dial is selected:

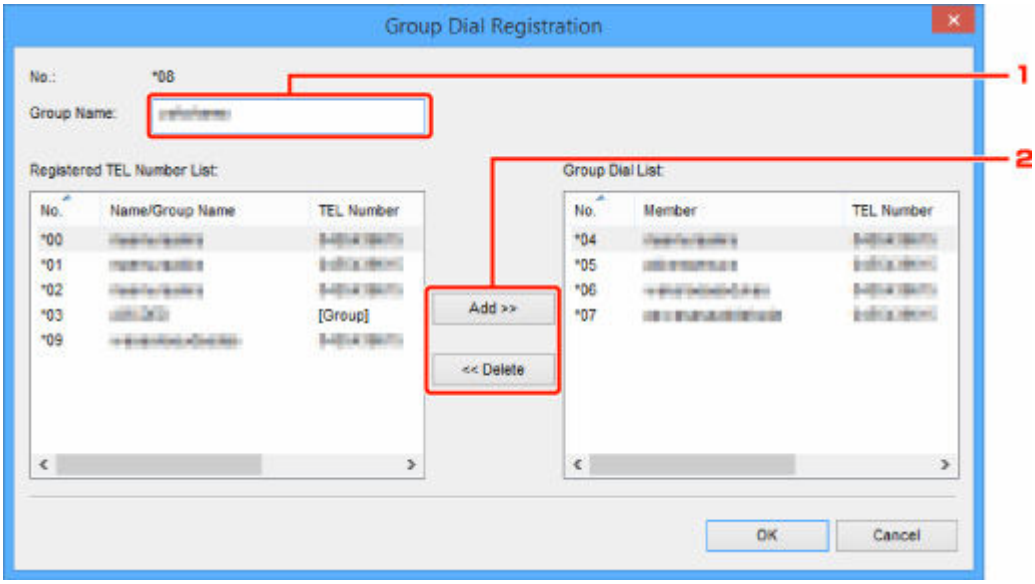

     1. Enter a new group name.

2. Add or delete a member to/from group dial.

   To add a member:

   Select a code to add to group dial, and then click **Add >>**.

   To delete a member:

   Select a code to delete from group dial, and then click **<< Delete**.

5. Click **OK**.

To continue changing fax/telephone numbers or group dials, repeat steps 4 and 5.

- To save the edited information on the computer.
  1. Click **Save to PC...**.
  2. Enter file name on displayed screen, and then click **Save**.
- To register the edited information to the printer:
  1. Click **Register to Printer**.
  2. When message appears, check it and click **OK**.

     The information is registered to the printer.

Deleting a Fax/telephone Number Using Speed Dial Utility2

Follow the procedure below to delete fax/telephone numbers.

Note

- Before you delete fax/telephone numbers using Speed Dial Utility2, make sure that no fax operations are in progress.

1. Start up Speed Dial Utility2.

2. Select a printer from **Printer Name:** list box, and then click **Display Printer Settings**.

3. Click **TEL Number Registration** from **Setting Item List:**.

   The list of registered fax/telephone numbers is displayed.

4. Select a code to delete from list, and then click **Delete**.

   Note

   - To delete all fax/telephone numbers on the list, click **Select All**, and then **Delete**.

5. When confirmation screen appears, click **OK**.

   The selected fax/telephone number is deleted.

   To continue deleting fax/telephone numbers, repeat steps 4 and 5.

   - To save the edited information on the computer.
     1. Click **Save to PC...**.
     2. Enter file name on the displayed screen, and then click **Save**.
   - To register the edited information to the printer:
     1. Click **Register to Printer**.
     2. When message appears, check it and click **OK**.

        The information is registered to the printer.

Changing Sender Information Using Speed Dial Utility2

Follow the procedure below to change the user's name or fax/telephone number.

1. Start up Speed Dial Utility2.

2. Select a printer from **Printer Name:** list box, and then click **Display Printer Settings**.

3. Click **User Information Setting** from **Setting Item List:**.

   The user's information is displayed.

4. Select an item to change, and then click **Edit...**.

   The **User Information** dialog box is displayed.

5. Enter new user's name on **User Name** and new fax/telephone number in **TEL Number**, and then click **OK**.

   - To save the edited information on the computer:
     1. Click **Save to PC...**.
     2. Enter file name on displayed screen, and then click **Save**.
   - To register the edited information to the printer:
     1. Click **Register to Printer**.
     2. When message appears, check it and click **OK**.

        The information is registered to the printer.

Registering/Changing Rejected Number Using Speed Dial Utility2

Follow the procedure below to register, change, or delete rejected numbers.

1. Start up Speed Dial Utility2.

2. Select a printer from **Printer Name:** list box, and then click **Display Printer Settings**.

3. Click **Rejected Number Setting** from **Setting Item List:**.

   The list of rejected numbers is displayed.

   - To register a rejected number:
     1. Select an unoccupied code from list, and then click **Edit...**.
     2. Enter fax/telephone number in **Rejected Number** dialog box, and then click **OK**.
   - To change a rejected number:
     1. Select a code to change from list, and then click **Edit...**.
     2. Enter fax/telephone number in **Rejected Number** dialog box, and then click **OK**.
   - To delete a rejected number:
     1. Select a code to delete from list, and then click **Delete**.

        The selected fax/telephone number is deleted.

        Note

        - To delete all fax/telephone numbers on the list, click **Select All**, and then **Delete**.

Registering Telephone Directory Has been Saved on Your Computer to Printer

You can load the data of the telephone directory (RSD file, *.rsd) and register it to your printer.

The data of the telephone directory (RSD file, *.rsd) that is exported from other printer can be loaded and registered to your printer.

Note

- In Speed Dial Utility2, the data of the telephone directory (RSD file, *.rsd) that is exported using Speed Dial Utility can be loaded.

1. Start up Speed Dial Utility2.
2. Select a printer from **Printer Name:** list box, and then click **Display Printer Settings**.
3. Click **Load from PC...**.
4. Select a data of telephone directory (RSD file, *.rsd) to register to your printer.
5. Click **Open** on dialog box.

   The selected telephone directory is displayed.

   Note

   - If you select the data of the telephone directory (RSD file, *.rsd) that is exported from other printer, the confirmation message appears. Click **OK**.

6. Click **Register to Printer**.

   The telephone directory that has been saved on the computer is registered to your printer.

Registering Recipients Using Speed Dial Utility2 (macOS)

About Speed Dial Utility2

Speed Dial Utility2 is a utility for forwarding the telephone directory registered on the printer to a computer and registering/changing it on the computer. In addition, you can register the telephone directory edited on the computer to the printer. You can also save them on the computer as a backup.

For safety reasons, it is recommended that you backup the registered data on the computer using Speed Dial Utility2.

- Starting Up Speed Dial Utility2
- Speed Dial Utility2 Dialog
- Saving Registered Telephone Directory on Printer to Your Computer
- Registering a Fax/telephone Number Using Speed Dial Utility2
- Changing a Fax/telephone Number Using Speed Dial Utility2
- Deleting a Fax/telephone Number Using Speed Dial Utility2
- Changing Sender Information Using Speed Dial Utility2
- Registering/Changing Rejected Number Using Speed Dial Utility2
- Registering Telephone Directory Has been Saved on Your Computer to Printer

Starting Up Speed Dial Utility2

Important

- Before starting up Speed Dial Utility2, make sure that the printer is connected to the computer correctly.
- Do not plug in or unplug any cables while the printer is in operation, or when the computer is in sleep or standby mode.
- If your printer is compatible with LAN connection, make sure that the printer is connected to the computer with LAN connection to use Speed Dial Utility2 via LAN connection.
- The password entry screen may appear during startup or operation. If it appears, enter the administrator password, and then click **OK**. If you do not know the administrator password, contact the administrator of the printer.

Follow the procedure below to start up Speed Dial Utility2.

1. Select **Applications** on **Go** menu of Finder.
2. Double-click **Canon Utilities** folder.
3. Double-click **Speed Dial Utility2** folder.
4. Double-click **Speed Dial Utility2**.

   Speed Dial Utility2 starts up.

Note

- You can also start up Speed Dial Utility2 from Quick Utility Toolbox.

Speed Dial Utility2 Dialog

The following items are on the **Speed Dial Utility2** dialog.

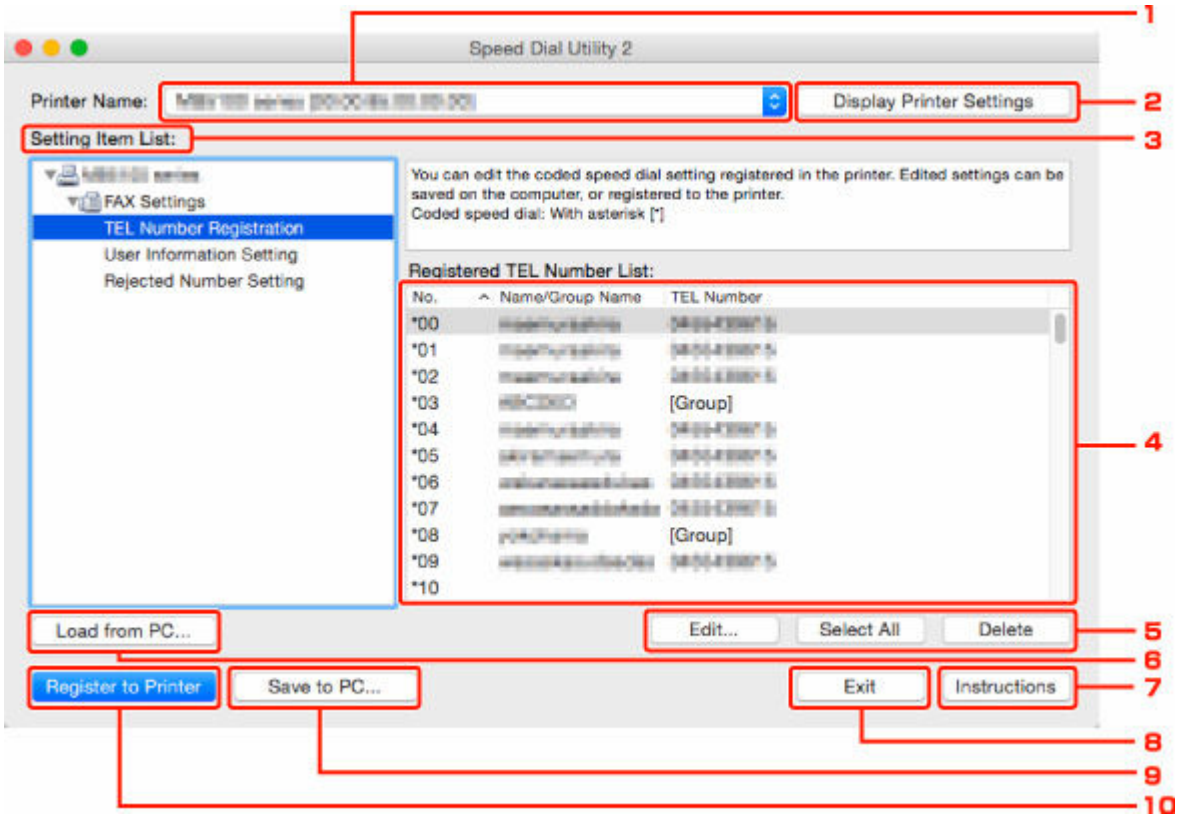

1. **Printer Name:**

   Selects the printer for editing the telephone directory using Speed Dial Utility2.

   Behind printer name, printer's MAC address is displayed.

   Note

   - For checking printer's MAC address, refer to "Checking Network Information" for your model from Home of the Online Manual.
   - For printer that supports both wireless LAN connection and wired LAN connection, MAC address of wired LAN connection is displayed regardless of the connection method.

2. **Display Printer Settings**

   Loads the telephone directory registered on the printer that selected for **Printer Name:** into Speed Dial Utility2.

3. **Setting Item List:**

   Selects a setting item for editing. Choose one item from **TEL Number Registration**, **User Information Setting**, and **Rejected Number Setting**.

4. Registered information list

   Displays the registered information selected for **Setting Item List:**.

Note

- By clicking on the item name, you can sort the display order.

5. **Edit.../Select All/Delete**

   Edits the item that selected for **Setting Item List:**, or deletes the item, or selects all the items.

   When multiple items on the registered information list are selected, you cannot use the **Edit...** button.

6. **Load from PC...**

   Displays the telephone directory saved on the computer.

7. **Instructions**

   Displays this guide.

8. **Exit**

   Quits Speed Dial Utility2. Information registered or edited using Speed Dial Utility2 is neither saved on the computer nor registered on the printer.

9. **Save to PC...**

   Saves the telephone directory edited using Speed Dial Utility2 on the computer.

10. **Register to Printer**

    Registers the telephone directory edited using Speed Dial Utility2 to the printer.

Saving Registered Telephone Directory on Printer to Your Computer

Follow the procedure below to save the telephone directory (includes recipients' name, recipients' fax/telephone number, group dial, user's name, user's fax/telephone number, and rejected numbers) that registered on the printer to the computer.

1. Start up Speed Dial Utility2.
2. Select a printer from **Printer Name:** list box, and then click **Display Printer Settings**.
3. Click **Save to PC...**.
4. Enter file name on displayed screen, and then click **Save**.

Note

- The data of the telephone directory (RSD file, *.rsd) can be imported to other printer.

➡ Registering Telephone Directory Has been Saved on Your Computer to Printer

Registering a Fax/telephone Number Using Speed Dial Utility2

Follow the procedure below to register fax/telephone numbers.

Note

Before you register fax/telephone numbers using Speed Dial Utility2, make sure that no fax operations are in progress.

1. Start up Speed Dial Utility2.

2. Select a printer from **Printer Name:** list box, and then click **Display Printer Settings**.

3. Click **TEL Number Registration** from **Setting Item List:**.

   The list of registered fax/telephone numbers is displayed.

4. Select an unoccupied code from list, and then click **Edit...**.

   The **Individual or Group Selection** dialog is displayed.

5. Click **Register individual TEL number** or **Register group dial**, and then click **Next...**.

   - If **Register individual TEL number** is selected:

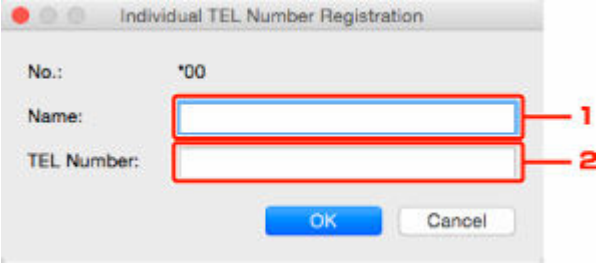

     1. Enter name.
     2. Enter fax/telephone number.

   - If **Register group dial** is selected:

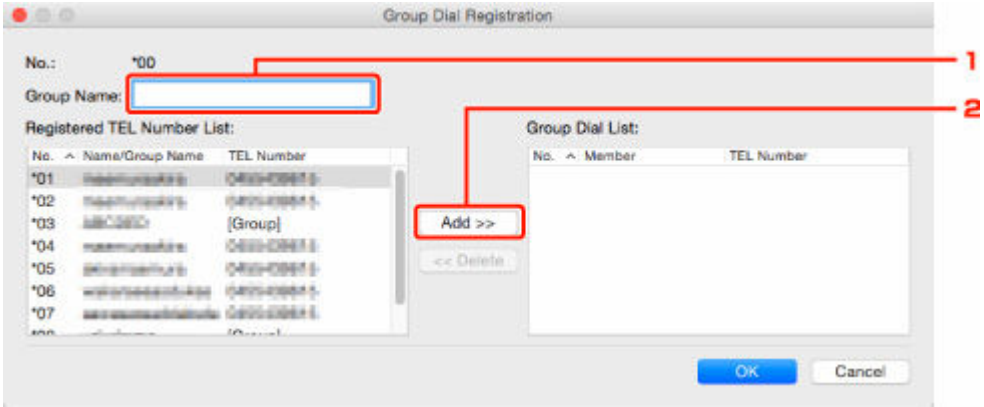

     1. Enter group name.
     2. Select a code you want to add to group dial, and then click **Add >>**.

Note

- You can only add the numbers that have already been registered.

6. Click **OK**.

To continue registering fax/telephone numbers or a group dial, repeat steps 4 to 6.

- To save the registered information on the computer.
  1. Click **Save to PC...**.
  2. Enter file name on displayed screen, and then click **Save**.
- To register the registered information to the printer:
  1. Click **Register to Printer**.
  2. When message appears, check it and click **OK**.

     The information is registered to the printer.

Changing a Fax/telephone Number Using Speed Dial Utility2

Follow the procedure below to change fax/telephone numbers.

Note

- Before you change fax/telephone numbers using Speed Dial Utility2, make sure that no fax operations are in progress.

1. Start up Speed Dial Utility2.

2. Select a printer from **Printer Name:** list box, and then click **Display Printer Settings**.

3. Click **TEL Number Registration** from **Setting Item List:**.

   The list of registered fax/telephone numbers is displayed.

4. Select a code to change from list, and then click **Edit...**.

   - If an individual fax/telephone number is selected:

     1. Enter a new name.
     2. Enter a new fax/telephone number.

   - If a group dial is selected:

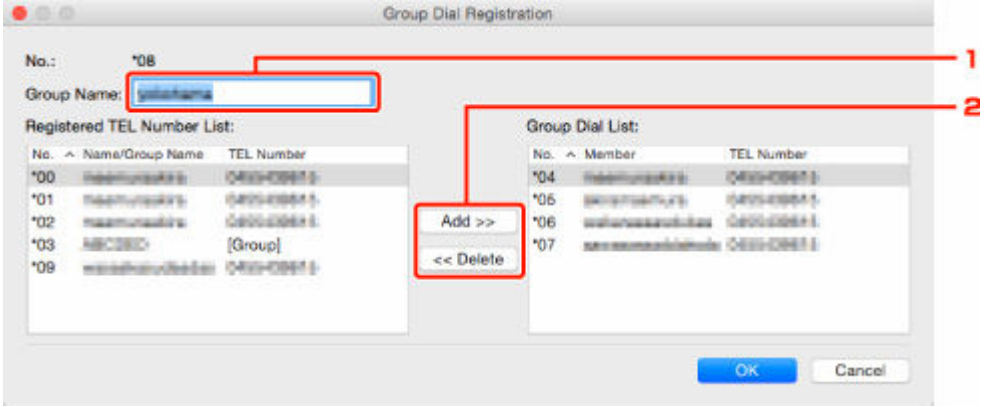

     1. Enter a new group name.
     2. Add or delete a member to/from group dial.

        To add a member:

        Select a code to add to group dial, and then click **Add >>**.

        To delete a member:

        Select a code to delete from group dial, and then click **<< Delete**.

5. Click **OK**.

To continue changing fax/telephone numbers or group dials, repeat steps 4 and 5.

- To save the edited information on the computer.
  1. Click **Save to PC...**.
  2. Enter file name on displayed screen, and then click **Save**.
- To register the edited information to the printer:
  1. Click **Register to Printer**.
  2. When message appears, check it and click **OK**.

     The information is registered to the printer.

Deleting a Fax/telephone Number Using Speed Dial Utility2

Follow the procedure below to delete fax/telephone numbers.

Note

- Before you delete fax/telephone numbers using Speed Dial Utility2, make sure that no fax operations are in progress.

1. Start up Speed Dial Utility2.

2. Select a printer from **Printer Name:** list box, and then click **Display Printer Settings**.

3. Click **TEL Number Registration** from **Setting Item List:**.

   The list of registered fax/telephone numbers is displayed.

4. Select a code to delete from list, and then click **Delete**.

   Note

   - To delete all fax/telephone numbers on the list, click **Select All**, and then **Delete**.

5. When confirmation screen appears, click **OK**.

   The selected fax/telephone number is deleted.

   To continue deleting fax/telephone numbers, repeat steps 4 and 5.

   - To save the edited information on the computer.
     1. Click **Save to PC...**.
     2. Enter file name on the displayed screen, and then click **Save**.
   - To register the edited information to the printer:
     1. Click **Register to Printer**.
     2. When message appears, check it and click **OK**.

        The information is registered to the printer.

Changing Sender Information Using Speed Dial Utility2

Follow the procedure below to change the user's name or fax/telephone number.

1. Start up Speed Dial Utility2.

2. Select a printer from **Printer Name:** list box, and then click **Display Printer Settings**.

3. Click **User Information Setting** from **Setting Item List:**.

   The user's information is displayed.

4. Select an item to change, and then click **Edit...**.

   The **User Information** dialog is displayed.

5. Enter new user's name on **User Name** and new fax/telephone number in **TEL Number**, and then click **OK**.

   - To save the edited information on the computer:
     1. Click **Save to PC...**.
     2. Enter file name on displayed screen, and then click **Save**.
   - To register the edited information to the printer:
     1. Click **Register to Printer**.
     2. When message appears, check it and click **OK**.

        The information is registered to the printer.

Registering/Changing Rejected Number Using Speed Dial Utility2

Follow the procedure below to register, change, or delete rejected numbers.

1. Start up Speed Dial Utility2.

2. Select a printer from **Printer Name:** list box, and then click **Display Printer Settings**.

3. Click **Rejected Number Setting** from **Setting Item List:**.

   The list of rejected numbers is displayed.

   - To register a rejected number:
     1. Select an unoccupied code from list, and then click **Edit...**.
     2. Enter fax/telephone number in **Rejected Number** dialog, and then click **OK**.
   - To change a rejected number:
     1. Select a code to change from list, and then click **Edit...**.
     2. Enter fax/telephone number in **Rejected Number** dialog, and then click **OK**.
   - To delete a rejected number:
     1. Select a code to delete from list, and then click **Delete**.

        The selected fax/telephone number is deleted.

        Note

        - To delete all fax/telephone numbers on the list, click **Select All**, and then **Delete**.

Registering Telephone Directory Has been Saved on Your Computer to Printer

You can load the data of the telephone directory (RSD file, *.rsd) and register it to your printer.

The data of the telephone directory (RSD file, *.rsd) that is exported from other printer can be loaded and registered to your printer.

Note

- In Speed Dial Utility2, the data of the telephone directory (RSD file, *.rsd) that is exported using Speed Dial Utility can be loaded.

1. Start up Speed Dial Utility2.
2. Select a printer from **Printer Name:** list box, and then click **Display Printer Settings**.
3. Click **Load from PC...**.
4. Select a data of telephone directory (RSD file, *.rsd) to register to your printer.
5. Click **Open** on dialog.

   The selected telephone directory is displayed.

   Note

   - If you select the data of the telephone directory (RSD file, *.rsd) that is exported from other printer, the confirmation message appears. Click **OK**.

6. Click **Register to Printer**.

   The telephone directory that has been saved on the computer is registered to your printer.

Sending Faxes Using Operation Panel of Printer

- Sending Faxes by Entering Fax/Telephone Number Basic
- Resending Faxes (Redialing Busy Number)
- Setting Items for Sending Faxes

Sending Faxes by Entering Fax/Telephone Number

This section describes dialing and sending faxes directly by entering the fax/telephone numbers.

Important

- It may be possible that faxes will reach unintended recipients due to the misdialing or incorrect registration of fax/telephone numbers. When you send important documents, we recommend that you send them after speaking on the telephone.

  ➡ Sending Fax after Speaking on Telephone

1. Check that printer is turned on.

2. Load original on platen or in ADF (Auto Document Feeder).

   Note

   - For details on the types, conditions of document, and how to load the document:

     ➡ Loading Originals

3. Select **FAX** on the HOME screen.

   ➡ Using Touch Screen

   The Fax standby screen is displayed.

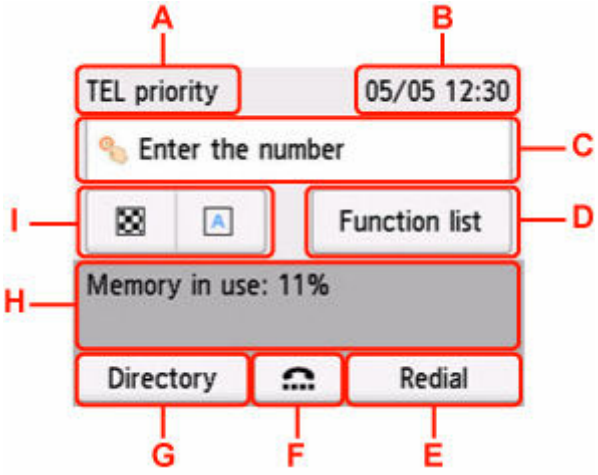

A: The receive mode selected currently is displayed.

B: The date and time are displayed.

C: Select to display the screen to enter the fax/telephone numbers.

D: You can use the each fax function and change the setting for the fax.

E: Select to send faxes with redialing.

➡ Resending Faxes (Redialing Busy Number)

F: Select to send faxes with the on hook dial function.

➡ Using On Hook Dial Function

G: You can select a registered fax/telephone number.

➡ Sending Fax to Registered Recipient

H: The current state is displayed.

I: You can change the settings for sending a fax.

➡ Setting Items for Sending Faxes

Note

- If you have not set up the printer for sending/receiving faxes yet, the message for setup is displayed on the touch screen when you select **FAX** on the HOME screen for the first time. When you set up for faxing, follow the procedure according to the instructions on the touch screen.

4. Dial recipient's fax/telephone number.

1. Select entry field of fax/telephone numbers.

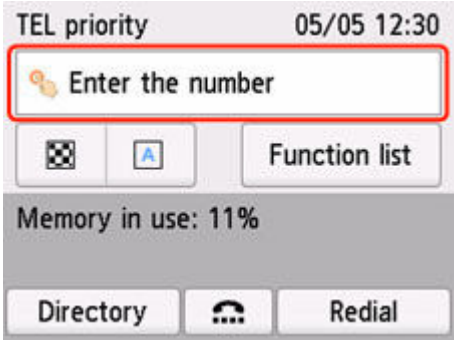

2. Enter fax/telephone number.

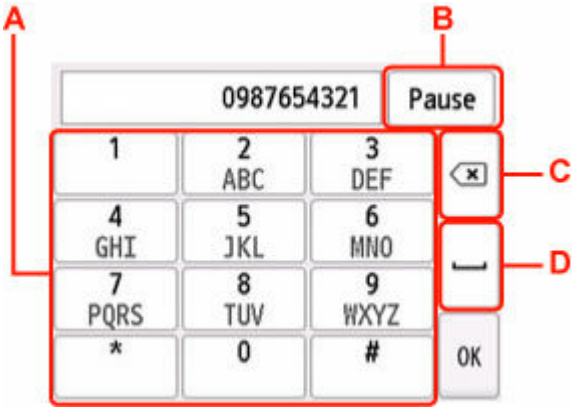

A: Enters the number.

B: Enters a pause "P".

C: Deletes the entered number.

D: Enters a blank space.

3. Select **OK**.

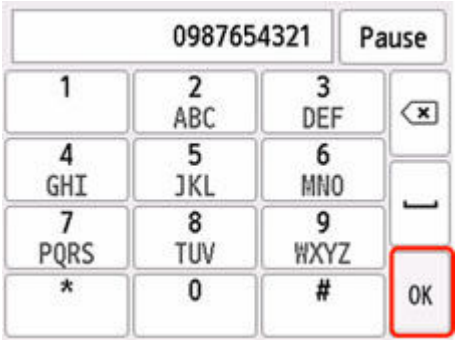

The touch screen returns to the Fax standby screen.

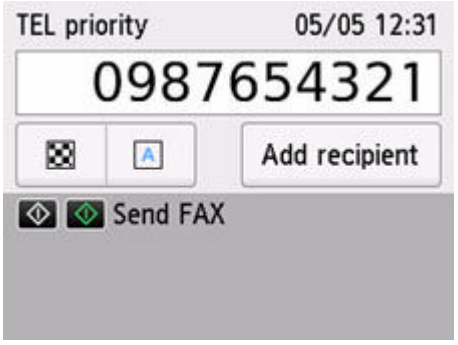

5. Press **Black** button or **Color** button.

The printer starts scanning the document.

Important

- Color transmission is available only when the recipient's fax device supports color faxing.
- Do not open the document cover until scanning is completed.

6. Start sending.

- **If you load the document in the ADF:**

  The printer scans the document automatically and starts sending the fax.

  Note

  - To cancel a fax transmission, press the **Stop** button. To cancel a fax transmission while it is in progress, press the **Stop** button, and then follow the instructions on the touch screen.
  - If documents remain in the ADF after the **Stop** button is pressed while scanning is in progress, **Document in ADF. Remove the document from the document tray and tap [OK].** is displayed on the touch screen. By selecting **OK**, the remaining documents are automatically ejected.

- **If you load the document on the platen:**

  After scanning the document, the confirmation screen asking you if you load the next document is displayed.

  To send the scanned document, select **Send now** to start sending it.

  To send two or more pages, follow the message to load the next page, and select **Scan**. After scanning all pages, select **Send now** to start sending.

Note

- To cancel sending the fax, press the **Stop** button.

Note

- When your printer is connected to a PBX (Private Branch Exchange) system, refer to the operating instructions of the system for details on dialing the recipient's fax/telephone number.
- In case the printer was not able to send a fax, such as when the recipient's line was busy, it has the function to automatically redial the number after a specified interval. Automatic redialing is enabled by default.

  ➡ Automatic Redialing

- Unsent documents, such as those pending redial, are stored in the printer's memory. They are not stored in the case of a sending error.

  ➡ Document Stored in Printer's Memory

- Do not unplug the power cord until all documents are sent. If you unplug the power cord, all unsent documents stored in the printer's memory are lost.

Resending Faxes (Redialing Busy Number)

There are two methods of redialing: Automatic redialing and Manual redialing.

- Automatic Redialing

  If you send a document and the recipient's line is busy, the printer will redial the number after a specified interval.

  ➡ Automatic Redialing

- Manual Redialing

  You can redial to the recipients dialed by entering the fax/telephone numbers.

  ➡ Manual Redialing

Important

- It may be possible that faxes will reach unintended recipients due to the misdialing or incorrect registration of fax/telephone numbers. When you send important documents, we recommend that you send them after speaking on the telephone.

  ➡ Sending Fax after Speaking on Telephone

Note

- Automatic redialing is enabled by default.
- For details on the basic sending operations:

  ➡ Sending Faxes by Entering Fax/Telephone Number

Automatic Redialing

You can enable or disable automatic redialing. If you enable automatic redialing, you can specify the maximum number of redial attempts and the length of time the printer waits between redial attempts.

Enable and specify the automatic redialing setting on **Auto redial** in **Advanced FAX settings** under **FAX settings**.

➡ Advanced FAX settings

Important

- While automatic redialing, the unsent fax is stored in the printer's memory temporarily until the sending fax is complete. If a power failure occurs or you unplug the power cord before automatic redialing is complete, all faxes stored in the printer's memory are deleted and not sent.

Note

- To cancel automatic redialing, wait until the printer starts redialing, and then press the **Stop** button.
- To cancel automatic redialing, delete the unsent fax from the printer's memory while the printer is on-standby for a redial operation. For details, see Deleting Document in Printer's Memory.

Manual Redialing

Follow the procedure below for manual redialing.

1. Check that printer is turned on.

2. Load original on platen or in ADF (Auto Document Feeder).

3. Select **FAX** on the HOME screen.

   ➡ Using Touch Screen

   The Fax standby screen is displayed.

4. Change send settings as necessary.

   ➡ Setting Items for Sending Faxes

5. Select **Redial**.

   The **Redial** screen is displayed.

6. Select a recipient's number to redial.

7. Press **Black** button or **Color** button.

   Important

   - Color transmission is available only when the recipient's fax device supports color faxing.

Note

- For manual redialing, the printer memorizes up to 10 recent recipients dialed by entering the fax/telephone numbers. Note that the printer does not memorize any recipients dialed using the redial function or selecting from the directory.
- To cancel manual redialing, press the **Stop** button. To cancel a fax transmission while it is in progress, press the **Stop** button, and then follow the instructions on the touch screen.
- If documents remain in the ADF after the **Stop** button is pressed while scanning is in progress, **Document in ADF. Remove the document from the document tray and tap [OK].** is displayed on the touch screen. By selecting **OK**, the remaining documents are automatically ejected.

Setting Items for Sending Faxes

You can change the send settings such as the scan contrast or the scan resolution on the Fax standby screen.

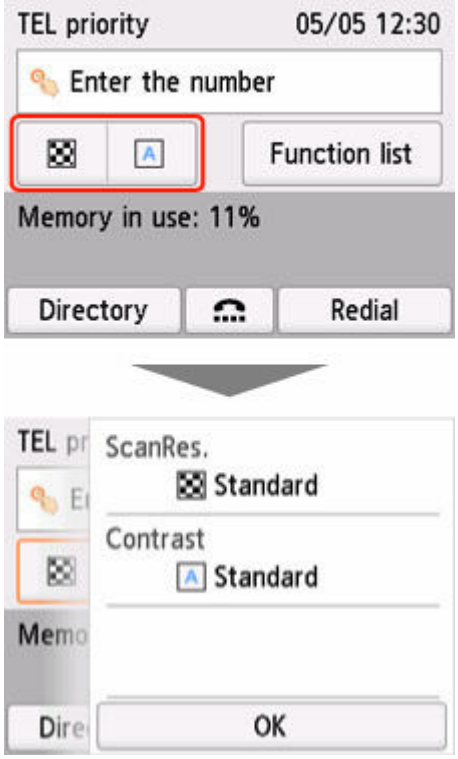

Select to change the send settings.

- **ScanRes.**

  The following settings of the scan resolution are selectable.

  Standard

  Suitable for text-only documents.

  Fine

  Suitable for fine-print documents.

  Extra fine

  Suitable for detailed illustration or fine-print quality documents.

  If the recipient's fax device is not compatible with **Extra fine** (300 x 300 dpi), the fax will be sent in the **Standard** or **Fine** resolution.

  Photo

  Suitable for photographs.

  Note

  - When sending a color fax, documents are always scanned in the same resolution (200 x 200 dpi). The image quality (compression rate) is determined by which scan resolution is selected, except that **Extra fine** and **Photo** provide the same image quality.

- **Contrast**

  Select a setting of the scan contrast from **Lower**, **Standard**, and **Higher**.

The touch screen returns to the Fax standby screen when you finish specifying the setting and selecting **OK**.

Sending Faxes from Computer (Windows)

- Sending a FAX (Fax Driver) Basic
- Creating an Address Book (Fax Driver)
- Edit or Remove a Recipient from an Address Book (Fax Driver)
- Search for a Recipient in an Address Book (Fax Driver)
- Cannot Send Faxes from Computer
- How to Open the Setting Screen of the Fax Driver
- General Notes (Fax Driver)

Sending a FAX (Fax Driver)

You can send faxes using the fax driver from applications that support document printing.

Note

- Only black and white transmission is supported.

1. Make sure that the machine is turned on.

2. Open the document you want to fax with an application (such as Notepad), and then click the Print command. (The command is **Print...** on the **File** menu.)

3. In **Select Printer** or **Name** in the **Print** dialog box, select **Canon XXX series FAX** (where "XXX" is the model name).

4. Click **Print** or **OK**.

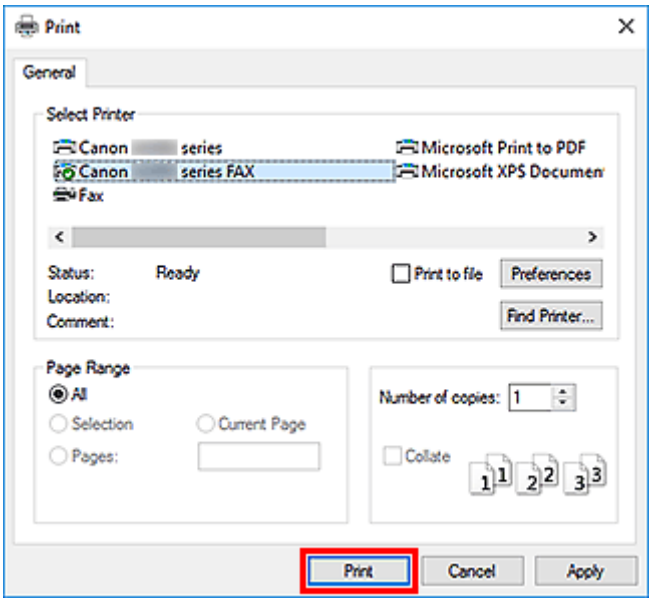

* **Print** dialog box in Notepad

Note

- Click **Preferences** or **Properties** in the **Print** dialog box to open the print settings dialog box of the fax driver in which you can set the paper size and print orientation. For details on how to open the print settings dialog box of the fax driver, see "How to Open the Setting Screen of the Fax Driver."

5. Click **Open Address Book...** in **Set Recipient** in the **Send Fax** dialog box.

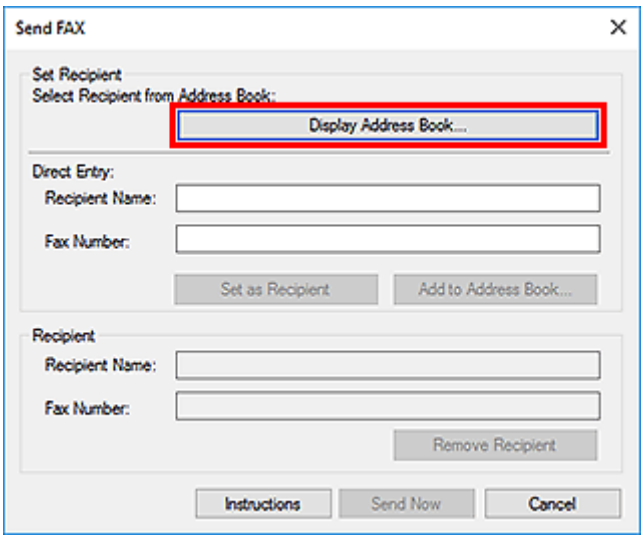

6. Select a recipient from **Recipient Name** in the **Select Recipient from Address Book** dialog box, then click **Set as Recipient**.

The selected recipient is reflected in **Recipient** in the **Send Fax** dialog box.

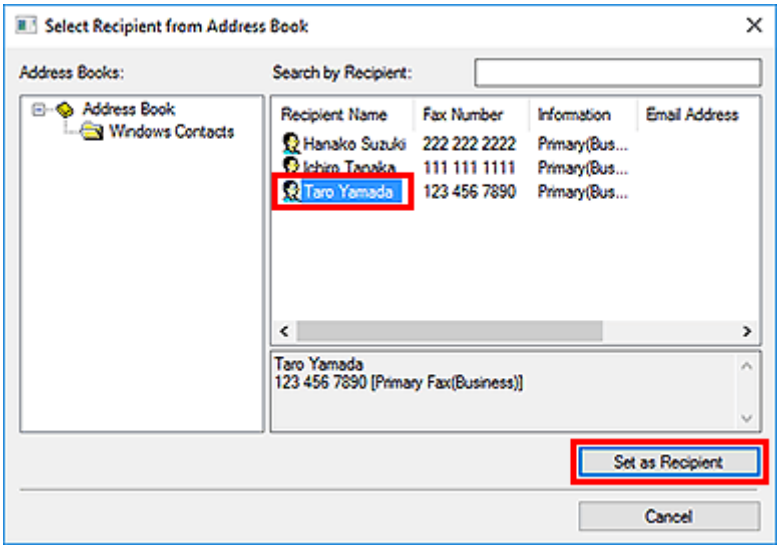

Important

- You cannot specify a recipient if there is no recipient registered in the address book. Register the recipient in the address book and reopen the address book.

  For details on how to register recipients in the address book, see "Creating an Address Book (Fax Driver)."

- If the recipient's fax/telephone number is entered incorrectly or the registered fax/telephone number is incorrect, the fax may be sent to an unexpected recipient. When sending an important fax, it is recommended that you send it after confirming the entered information and recipient's status.

Note

- You can also specify **Recipient** by entering the **Recipient Name** and **Fax Number** in **Direct Entry** in the **Send Fax** dialog box and then clicking **Set as Recipient**.

- For details on valid characters, see "General Notes (Fax Driver)."
- You can send faxes even if only the **Fax Number** is entered.
- You can register the recipient you entered to the address book by clicking **Add to Address Book...**. For details on how to register recipients in the address book, see "Creating an Address Book (Fax Driver)."

- Add the outside line access number before the fax number as needed.

  (Example: When the outside line access number is "0" and the fax number is "XXX-XXXX", enter "0XXX-XXXX".)

7. Click **Transmit**.

When a confirmation message is displayed, click **OK**.

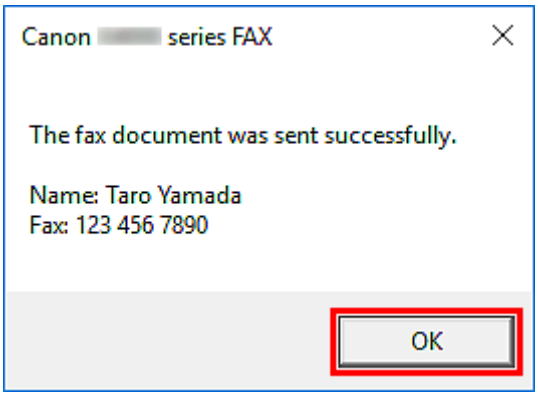

Important

- If you cannot send a fax due to line failure or other problem, see "Cannot Send Faxes from Computer."

Canceling Transmission

If you click **Transmit** in the **Send Fax** dialog box, the printer icon is displayed in the taskbar. Double-click this icon to display the list of fax jobs awaiting transmission or being sent.

Right-clicking a job and selecting **Cancel** stops transmission.

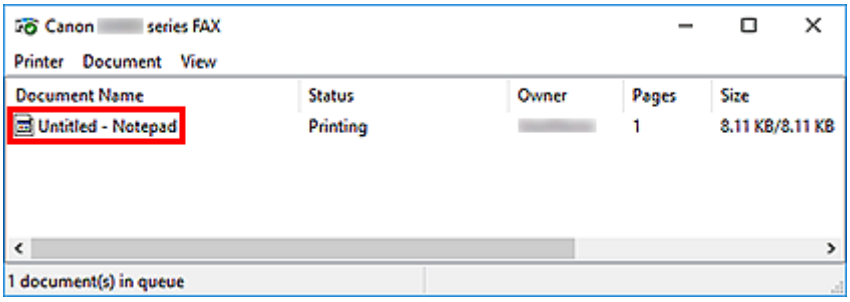

Creating an Address Book (Fax Driver)

By using the address book, you can send a fax by simply specifying a recipient from it.

You can register the recipient's name, fax number and other information in the address book.

Registering a recipient (WAB contact) in the address book

You can register an individual recipient (Contact) in the address book.

1. Open the print settings dialog box of the fax driver.

2. Click **Address Book...** in the displayed dialog box.

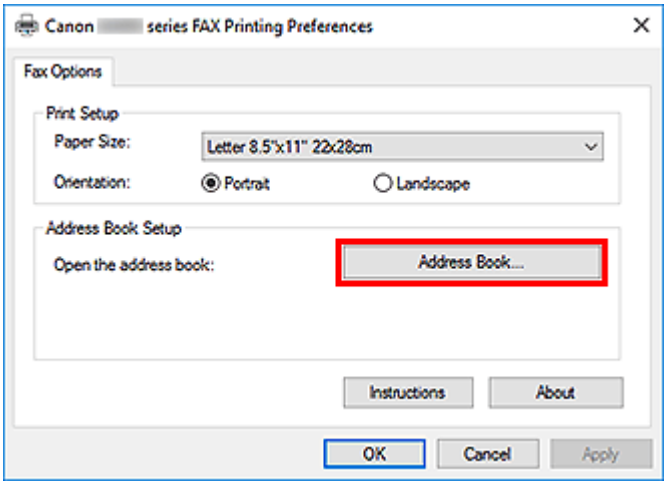

Note

- Once an individual recipient (Contact) is registered in the address book folder (Windows Contacts) as an address book file (.contact file), it can be used in multiple applications. However, you cannot change the address book you use, as only one address book can be created per user.

  Follow the steps below to open Windows Contacts.

  - **Windows 11/Windows 10:**

    Search for "Contacts" from **Search** box.

  - **Windows 8.1/Windows 8:**

    Select the **Search** charm, then search for "Contacts".

  - **Windows 7/Windows Vista:**

    Select **XXXX (user name)** from the **Start** menu, then double-click **Contacts**.

3. In the **Address Book** dialog box, click **New...**.

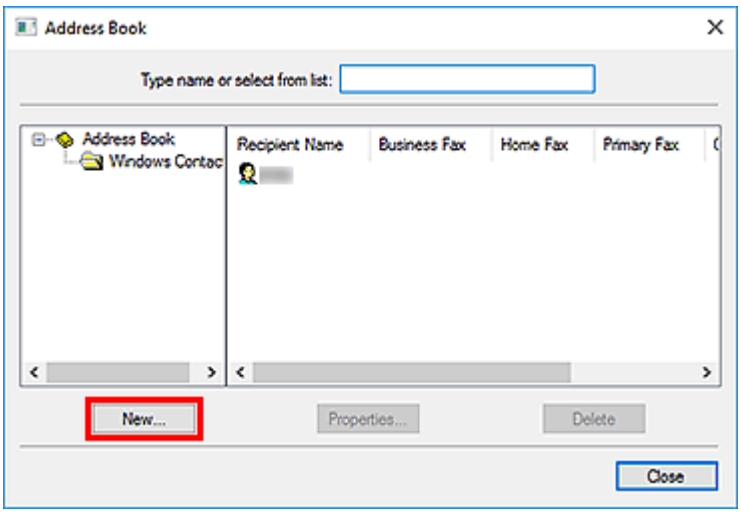

4. Select **Contact** in the **New Entry** dialog box, then click **OK**.

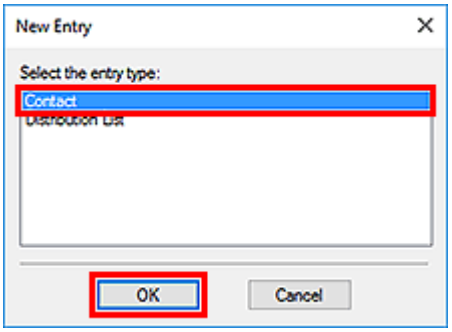

Note

- For faxing, you can only specify the **Contact** (one recipient). You cannot specify a **Distribution List**.

5. On **Name and E-mail** tab of Properties dialog box, enter **First** and **Last**.

The recipient's name will be printed at the top of the fax received by the recipient.

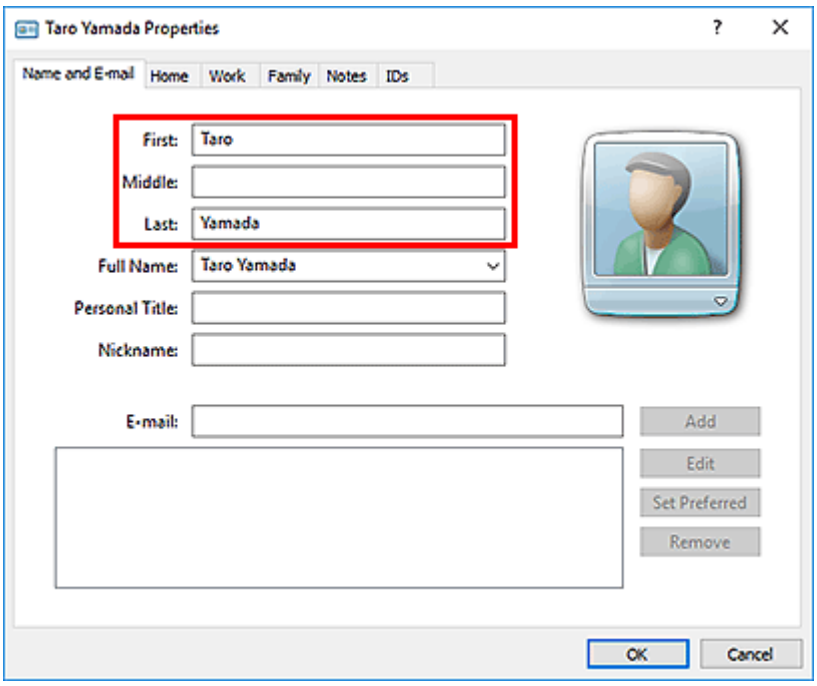

6. Enter the fax number on the **Home** or **Work** tab, then click **OK**.

An individual recipient (Contact) is registered in the address book.

Note

- You can also register a recipient by clicking the **Add to Address Book...** button on the **Send Fax** dialog box after entering the recipient.

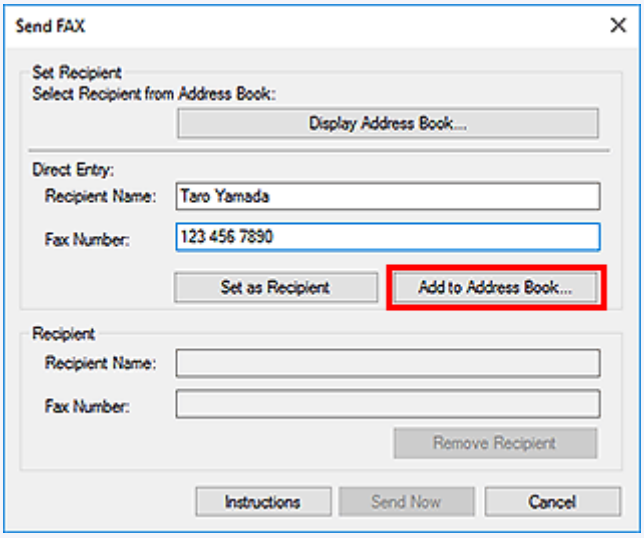

- Add the outside line access number before the fax number as needed.

  (Example: When the outside line access number is "0" and the fax number is "XXX-XXXX", enter "0XXX-XXXX".)

- If you upgrade from Windows XP to Windows Vista, the address book you created in Windows XP may not be reflected in Windows Vista. In this case, open the address book in the following procedure and reflect the information to a new address book.

  1. Select **Control Panel** > **Appearance and Personalization** > **Folder Options**.

2. Click the **View** tab of the **Folder Options** dialog box, select **Show hidden files and folders** in **Advanced settings**, then click **OK**.
3. From the **Start** menu, select **XXXX (user name)**, then double-click **AppData** > **Roaming** > **Canon** > **MP5** to open the folder.
4. Double-click the ".wab" file.

   The address book will be reflected in Windows Vista automatically.

Related Topic

- Edit or Remove a Recipient from an Address Book (Fax Driver)
- Search for a Recipient in an Address Book (Fax Driver)

Edit or Remove a Recipient from an Address Book (Fax Driver)

You can change the recipients' names, fax numbers and other information, or delete recipients registered in the address book.

Editing Recipients in an address book

1. Open the print settings dialog box of the fax driver.

2. Click **Address Book...** in the displayed dialog box.

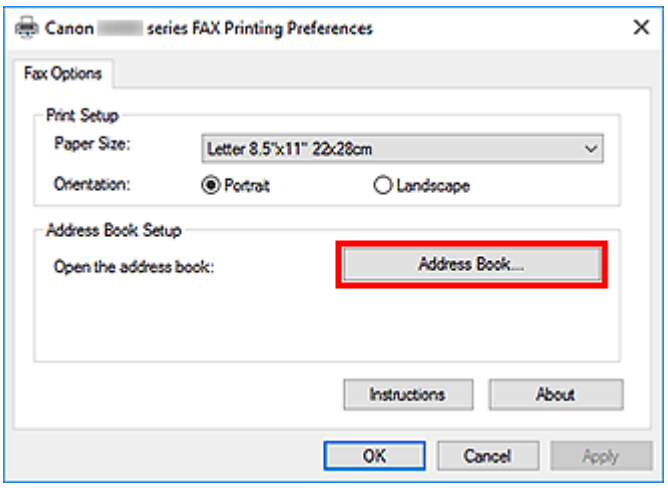

3. Select the recipient you want to edit from the **Address Book** dialog box, then click **Properties...**.

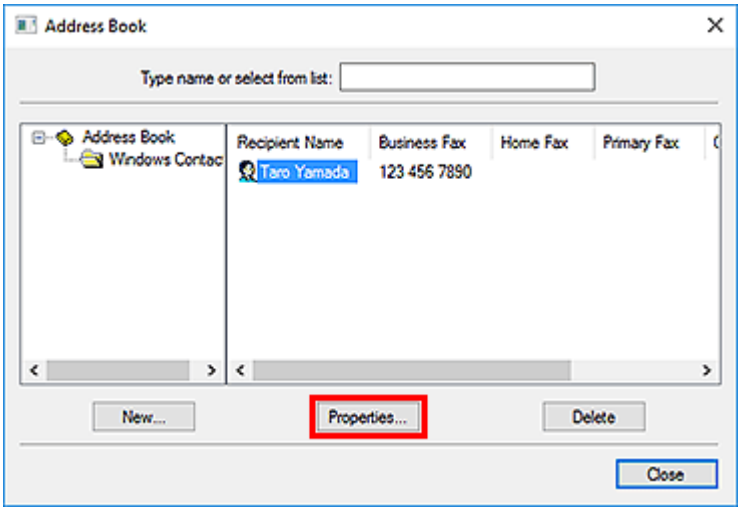

4. Change information as needed on the Properties dialog box, then click **OK**.

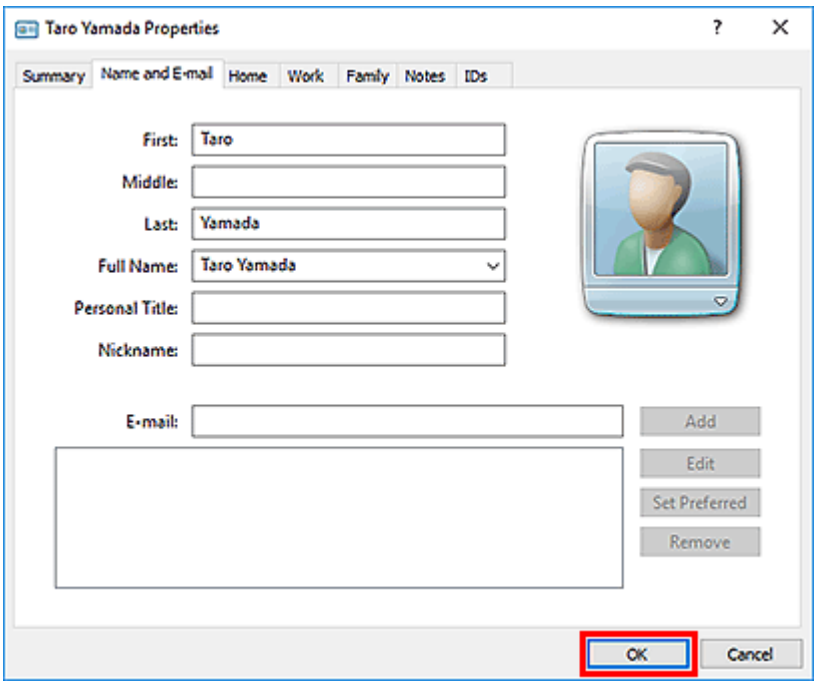

Removing Recipients from an address book

1. Open the print settings dialog box of the fax driver.

2. Click **Address Book...** in the displayed dialog box.

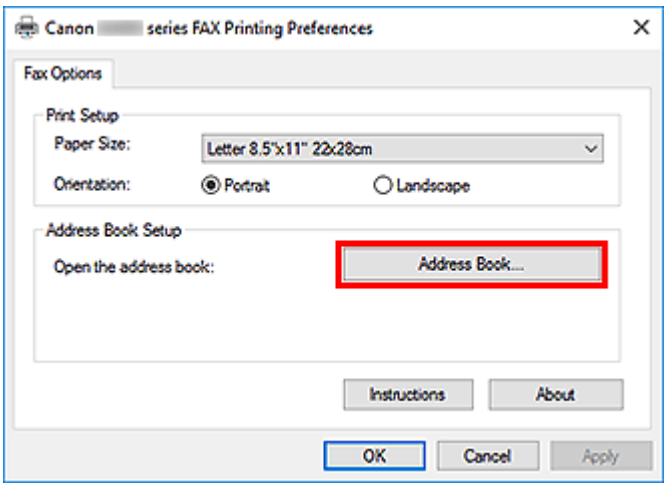

3. Select the recipient you want to delete from the **Address Book** dialog box, then click **Delete**.

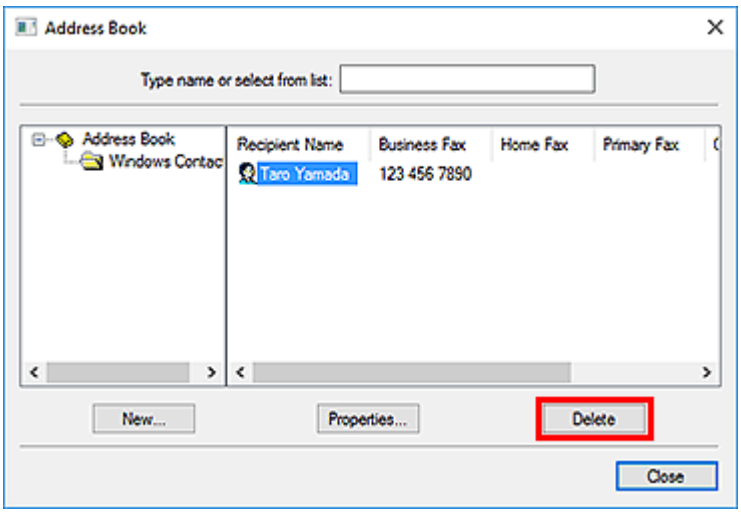

4. When a confirmation message is displayed, click **Yes**.

Search for a Recipient in an Address Book (Fax Driver)

You can search for recipients registered in the address book by name.

1. Open the document you want to fax with an application (such as Notepad), and then click the Print command. (The command is **Print...** on the **File** menu.)

2. In **Select Printer** or **Name** in the **Print** dialog box, select **Canon XXX series FAX** (where "XXX" is the model name).

3. Click **Print** or **OK**.

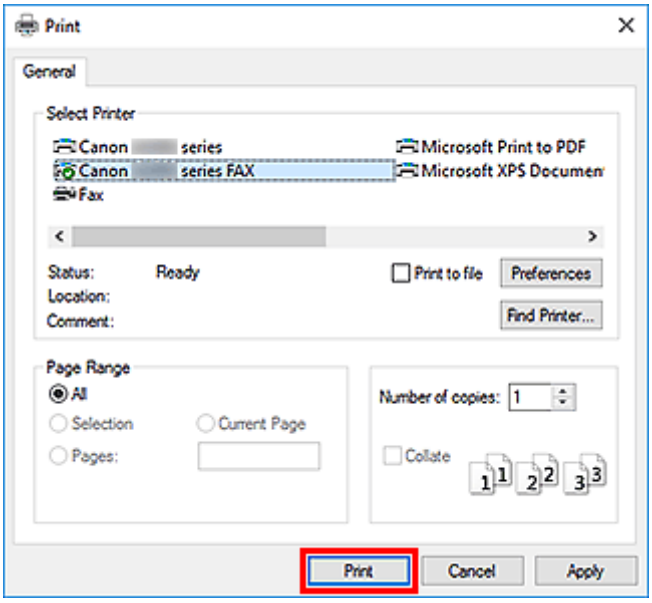

* **Print** dialog box in Notepad

4. Click **Open Address Book...** in **Set Recipient** in the **Send Fax** dialog box.

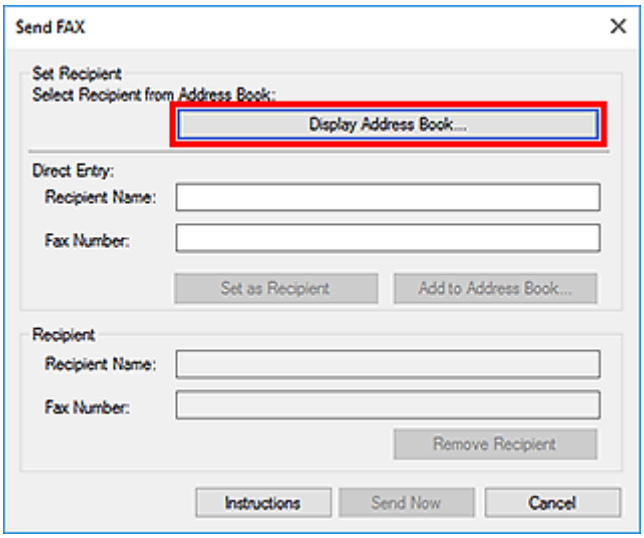

5. Enter the name of the recipient you want to search for in **Search by Recipient** in the **Select Recipient from Address Book** dialog box.

If the entered name is found, the recipient will be displayed in the contact list with its name selected.

While the name is selected, click **Set as Recipient** to enter it as the recipient.

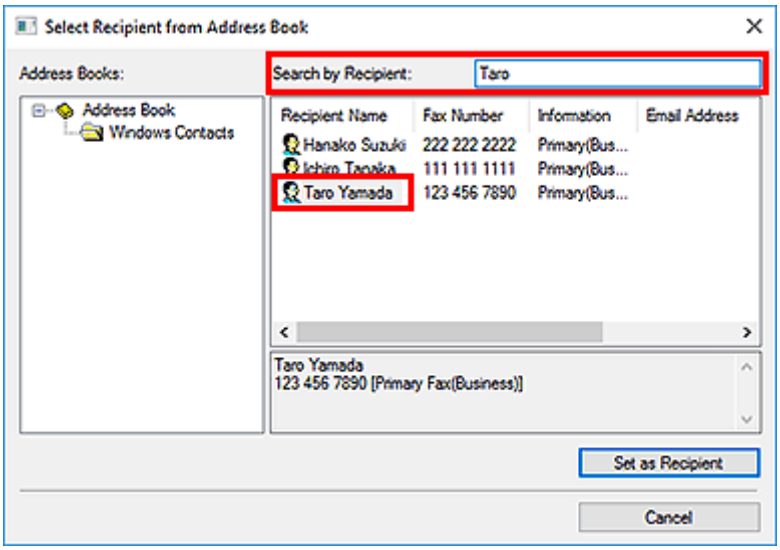

Important

- You cannot search by criteria other than name.

Q

Cannot Send Faxes from Computer

A

Check 1 Is the power turned on?

You cannot send faxes if the power is turned off. Press the **ON** button to turn the power on.

If you disconnected the power cord without turning off the power (one of the buttons on the operation panel is lit), reconnecting it turns on the power.

If you disconnected the power cord after pressing the **ON** button to turn off the power (no buttons on the operation panel are lit), reconnect it, then press the **ON** button to turn on the power.

If the power was turned off due to power failure, etc., the power is automatically turned on when the power failure is resolved.

Important

- Confirm that all lamps on the operation panel are off before unplugging the power cord, then unplug the power cord.

  If a power failure occurs or you unplug the power cord, all faxes stored in the machine's memory are deleted.

Note

- If the faxes stored in the machine's memory are deleted by a power failure or unplugging the power cord, the list of the faxes deleted from the machine's memory will be printed after turning the machine on.

Check 2 Is a document being sent from memory or a fax being received into memory?

When the message for the transmission/reception is displayed on the machine's LCD (Liquid Crystal Display) monitor, a fax is being sent from/received into machine's memory. Wait until the transmission/reception is complete.

Check 3 Is the telephone line type set correctly?

Check the telephone line type setting and change it as necessary.

Check 4 Is **Dial tone detect** set to **ON**?

Resend the fax after a while.

If you still cannot send the fax, select **OFF** for **Dial tone detect** in **Advanced FAX settings** under **FAX settings**.

Check 5 Is the recipient's fax number correct?

Check the recipient's fax number, then send the document again.

➡ Sending a FAX (Fax Driver)

Note

- For details on how to change the recipients registered in the address book, see "Edit or Remove a Recipient from an Address Book (Fax Driver)."

Check 6 Does an error occur during transmission?

Check if a message is displayed in the computer screen.

If displayed, check the message, then resolve the error.

Check 7 Does a printer error occur?

Check if a message is displayed on the LCD monitor.

If a support code is displayed, see "Support Code List" for your model from Home of the Online Manual.

If no support code is displayed, see "A Message Is Displayed" for your model from Home of the Online Manual.

If you are in a hurry, press the **Stop** button to close the message, then send the fax.

Check 8 Is the telephone line connected correctly?

Reconnect the telephone line cable to the telephone line jack.

If the telephone line is connected correctly, then there is a problem with your telephone line. Contact your telephone company and the manufacturer of your terminal adapter or telephone adapter.

How to Open the Setting Screen of the Fax Driver

The following explains how to display the print settings dialog box or the Properties dialog box of the fax driver from your application or from the fax/printer icon.

Opening the Print Settings Dialog Box of the Fax Driver from an Application

1. Click the Print command in the application.

   In general, you can open the **Print** dialog box by selecting Print from the File menu.

2. Select "your model name," then click **Preferences** (or **Properties**).

   The print settings dialog box of the fax driver appears.

Opening the Print Settings Dialog Box of the Fax Driver from the Fax/Printer Icon

- **Windows 11:**

  1. Select **Settings** > **Bluetooth and Devices** > **Printers and Scanners**.

  2. Right-click the **Canon XXX series** icon or **Canon XXX series FAX** icon and select **Printing Preferences**, then **Canon XXX series FAX**. (Where "XXX" is the model name.)

- **Windows 10／Windows 8.1／Windows 8／Windows 7 :**

  1. Select **Control Panel** > **Hardware and Sound** > **Devices and Printers**.

  2. Right-click the **Canon XXX series** icon or **Canon XXX series FAX** icon and select **Printing Preferences**, then **Canon XXX series FAX**. (Where "XXX" is the model name.)

- **Windows Vista:**

  1. Select **Control Panel** > **Hardware and Sound** > **Printers**.

  2. Right-click the **Canon XXX series FAX** icon (where "XXX" is the model name) and select **Printing Preferences...**.

Opening the Properties Dialog Box of the Fax Driver from the Fax/ Printer Icon

- **Windows 11:**

  1. Select **Settings** > **Bluetooth and Devices** > **Printers and Scanners**.

  2. Right-click the **Canon XXX series** icon or **Canon XXX series FAX** icon and select **Printing Preferences**, then **Canon XXX series FAX**. (Where "XXX" is the model name.)

- **Windows 10／Windows 8.1／Windows 8／Windows 7 :**

  1. Select **Control Panel** > **Hardware and Sound** > **Devices and Printers**.

  2. Right-click the **Canon XXX series** icon or **Canon XXX series FAX** icon and select **Printer Properties**, then **Canon XXX series FAX**. (Where "XXX" is the model name.)

- **Windows Vista:**

  1. Select **Control Panel** > **Hardware and Sound** > **Printers**.

  2. Right-click the **Canon XXX series FAX** icon (where "XXX" is the model name) and select **Properties**.

General Notes (Fax Driver)

This fax driver is subject to the following restrictions.

Keep the following points in mind when using the fax driver.

- The fax driver may not work correctly when sending a Microsoft Excel 2002 document as a fax with the **Allow A4/Letter Paper Resizing** option checked in Microsoft Excel 2002. Follow the instructions below to solve the problem:
  1. Click **Options...** from the **Tools** menu.
  2. Uncheck the **Allow A4/Letter Paper Resizing** option on the **International** tab.
- When using a network compatible printer, you cannot send faxes from multiple computers at the same time. If you try to send a fax from a computer while a fax is being sent from another computer, a message appears and your fax cannot be sent.

  Make sure that a fax is not being sent from another computer.
- If you assign the fax driver to the Bluetooth port, you cannot send a fax from the computer.
- You can use the following characters for **Fax Number**:

Character	Explanation
0 - 9 * #	For use in telephone and fax numbers.
, p	To place a pause between numbers.
P	To place a pause at the end of a sequence of numbers.
T	Numbers after the T will be sent as a tone signal.
+ - ( ), space	To make the number easier to read. You cannot insert a space at the front of a number.

  *You cannot use ".", "R", "M", or "E".
- You can enter the following number of characters in **Recipient Name** and **Fax Number**.

  Recipient Name: Up to 16 characters

  Fax Number: Up to 60 characters

  * The number of characters you can enter differs in some regions.
- The fax driver does not work correctly if you uncheck the **Enable printer pooling** option on the **Ports** tab of the **Canon XXX series FAX Properties** dialog box (where "XXX" is the model name). Check that the option is checked.

For details on how to open the **Canon XXX series FAX Properties** dialog box, see "Opening the Properties Dialog Box of the Fax Driver from the Fax/Printer Icon."

Sending Faxes from Computer (macOS)

- Sending Faxes Using AirPrint
- General Notes (Fax Transmission Using AirPrint)

Sending Faxes Using AirPrint

You can send faxes from a printer using AirPrint.

To send faxes, add your printer to your computer.

Checking Environment

First, check your environment.

- **AirPrint operation environment**

  A computer running macOS.

  Note

  - For supported operating system versions, click Home to return to the top page of the Online Manual for your model and search for "Specifications."

- **Requirement**

  The computer and your printer must be connected correctly.

Adding Printer to Computer

1. Open **System Settings**, and select **Printers & Scanners**

2. Click (**Add Printer, Scanner or Fax...**) to display printer list.

3. Select printer model name with **Bonjour Multifunction** displayed.

   Note

   - If the printer does not appear, check the following.
     - The printer is turned on.
     - The firewall function of the security software is off.
     - The printer is connected to the access point or directly connected to the computer.

4. Select**Canon XXX series** (where "XXX" is the model name) from **Use**.

5. Click **Add**.

Sending Fax

Note

- Only black and white transmission is supported.

1. Make sure printer is on.

2. In application, open document to fax.

3. Open Print dialog.

   To open the Print dialog, you typically select Print... from the File menu of your application software.

4. Select **Canon XXX series - Fax** (where "XXX" is the model name) from **Printer** list.

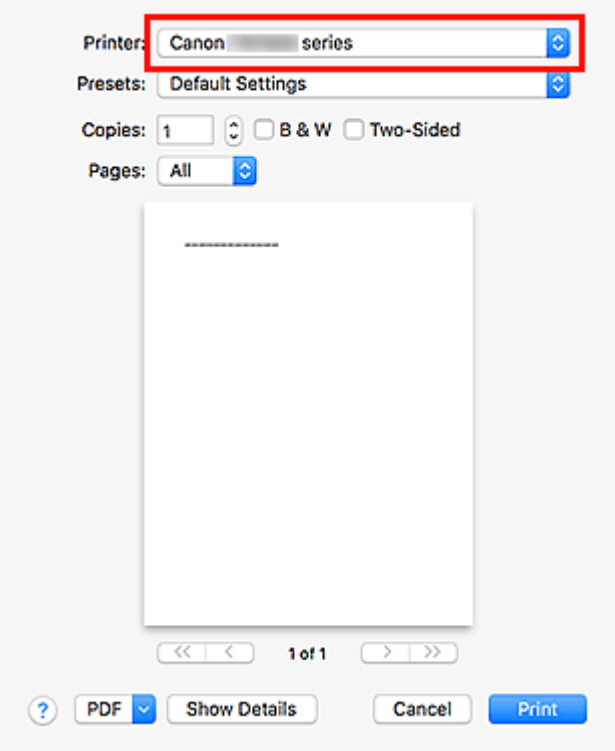

5. Specify fax paper settings as needed.

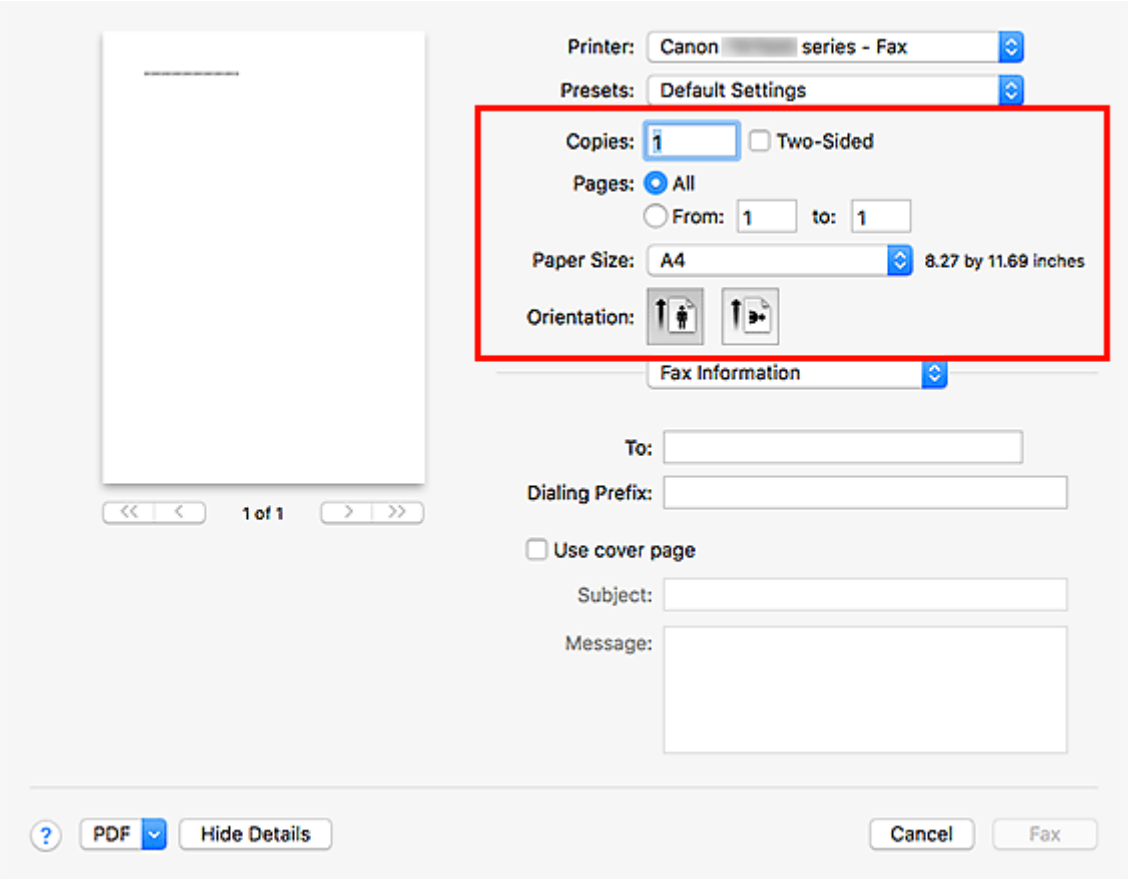

6. Enter fax/telephone numbers in **To**.

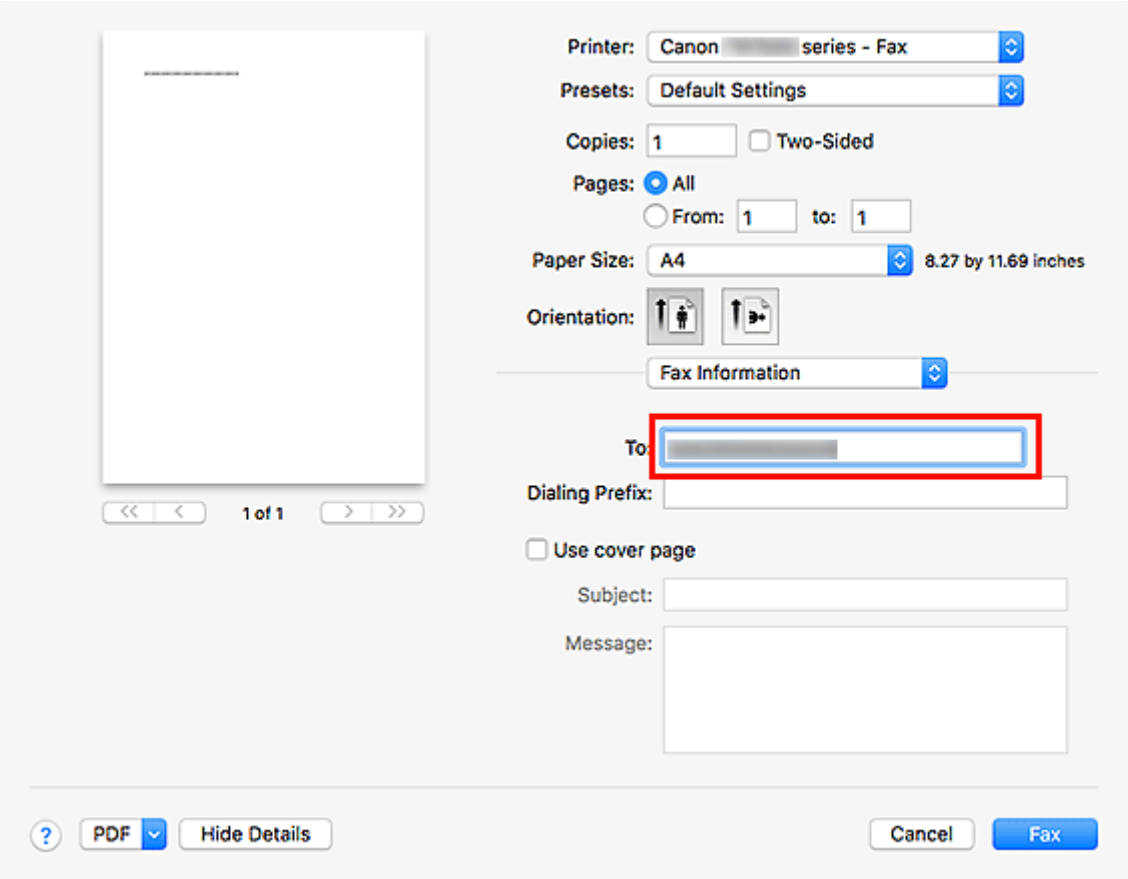

If you specify a dialing prefix, enter the code in **Dialing Prefix** and specify the cover page settings as needed.

7. Click **Fax**.

   The number is dialed automatically and the fax is sent.

   Note

   - To cancel sending the fax, press the printer's **Stop** button.

Automatic Redialing

If the fax could not be sent (for example, when the recipient was busy), the number is redialed automatically according to the automatic redialing setting of the printer.

You can enable or disable automatic redialing. If you enable automatic redialing, you can specify the maximum number of redial attempts and the length of time the printer waits between redial attempts.

Note

- To cancel automatic redialing, wait until redialing starts, and then press the printer's **Stop** button.
- For more details, click Home to return to the top page of the Online Manual for your model and search for "FAX settings."

General Notes (Fax Transmission Using AirPrint)

Sending faxes is subject to the following restrictions.

- Enter the characters in **To** and **Dialing Prefix** so that the total number of characters is within 40 characters.
- You can use the following characters for **To**:

Character	Explanation
0 - 9 * #	For use in telephone and fax numbers.
+ space	To make the number easier to read. You cannot insert a space at the front of a number.

- You can use the following characters for **Dialing Prefix**:

Character	Explanation
0 - 9 * #	For use in telephone and fax numbers.
p	To place a pause between numbers.
T	Numbers after the T will be sent as a tone signal.
+ space	To make the number easier to read. You cannot insert a space at the front of a number.

Receiving Faxes

- Receiving Faxes
- Changing Paper Settings
- Memory Reception

Receiving Faxes

This section describes the preparation necessary for receiving a fax and how to receive a fax.

Preparing for Receiving Fax

Prepare for receiving a fax according to the following procedure.

1. Check that printer is turned on.

2. Select **FAX** on the HOME screen.

   ➡ Using Touch Screen

   The Fax standby screen is displayed.

3. Check receive mode setting.

   Check the receive mode setting displayed on the Fax standby screen.

   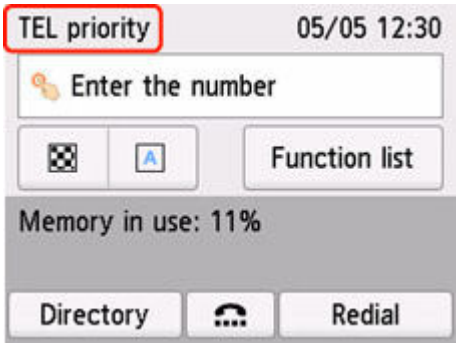

   Note

   - For details on how to change the receive mode:

     ➡ Setting Receive Mode

4. Load paper.

   Load the sheets of plain paper.

5. Specify paper settings as necessary.

   ➡ Changing Paper Settings

   This completes the preparation for receiving fax.

   When a fax is received, it is printed on the loaded paper automatically.

Receiving Fax

Depending on the selected receive mode, the receive operation varies.

Note

- For details on the receive mode:

  ➡ Setting Receive Mode

- You can specify the advanced settings of each receive mode.

  For details on the advanced settings of the receive mode:

  ➡ Advanced Settings of Receive Mode

- If the printer was not able to print a received fax, the printer stores the unprinted fax temporarily in its memory (memory receiving).

  ➡ Memory Reception

When TEL priority mode is selected:

- **When the call is a fax:**

  The telephone will ring when a call incomes.

  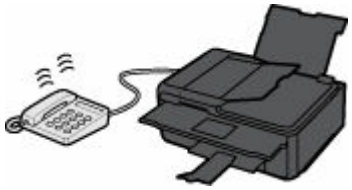

  Pick up the handset. If you hear the fax tone, wait for at least 5 seconds after it stops, and then hang up the handset.

  The printer will receive the fax.

  ### Note

  - If the printer will not switch to fax reception, select **FAX** again on the HOME screen, and then press the **Black** button or **Color** button to receive the fax.
  - To receive a fax without picking up the handset, select **Manual/auto switch: ON** in **Advanced**. **RX start time** allows you to specify the number of seconds until the printer switches to fax reception.
  - If you have subscribed to Duplex Ringing service in Hong Kong, the telephone will ring a specified number of times when there is an incoming call with a fax distinctive ring pattern. Then, the printer will switch to fax reception automatically without the handset being picked up.

    The number of times to ring the telephone until switching to fax reception can be changed.

- Set the printer to enable you to initiate fax reception from a connected telephone (remote reception).

  ➡ Remote Reception

- **When the answering device is connected to the printer:**
  - If the answering device is set to the answering mode, select **User-friendly RX: ON** in **Advanced**. If the call is a fax, the printer will receive the fax automatically.
  - If the answering mode is turned off on the answering device, pick up the handset. If you hear the fax tone, wait for at least 5 seconds after it stops, and then hang up the handset.
  - If **Manual/auto switch: ON** is selected in **Advanced**, set **RX start time** to longer than the time before the answering device starts playing the answering message. After making this setting, we recommend that you call the answering device using a mobile phone, etc. to confirm that messages are recorded successfully in the answering device.
  - Set your answering device to answering mode and adjust it as follows:

    - The entire message should be no longer than 15 seconds.

    - In the message, tell your callers how to send a fax.

- **When the call is a voice call:**

  The telephone will ring when a call incomes.

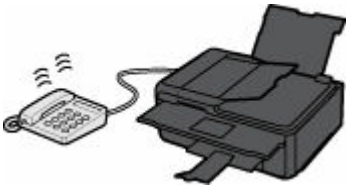

  Pick up the handset, and talk on the telephone.

Note

- If the printer unexpectedly switches to fax reception during telephone calls, select **User-friendly RX: OFF** in **Advanced**.
- If **Manual/auto switch: ON** is selected in **Advanced**, you must answer an incoming call by picking up the handset within the time specified in **RX start time**. Otherwise the printer will switch to fax reception.

When FAX only mode is selected:

- **When the call is a fax:**

  The printer will receive the fax automatically.

Note

- If a telephone is connected to the printer, the telephone will ring when a call incomes.
- You can change the number of times to ring the telephone with **Ring count** in **Advanced**.

When DRPD or Network switch is selected:

- **When the call is a fax:**

  The telephone will ring when a call incomes.

  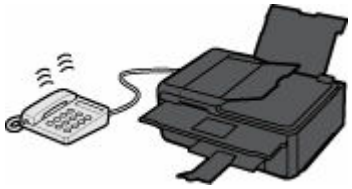

  The printer will receive the fax automatically when the fax ring pattern is detected.

  Note

  - You can change the number of times to ring the telephone.

    ➡ Advanced Settings of Receive Mode

- **When the call is a voice call:**

  The telephone will ring when a call incomes.

  When the printer does not detect the fax ring pattern, the telephone will continue ringing.

  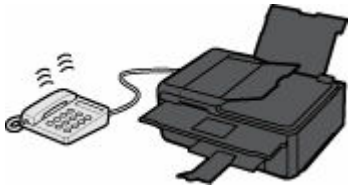

  Pick up the handset, and talk on the telephone.

Note

- To use this feature, you need to subscribe to a compatible service provided by your telephone company.
- **For DRPD**

  You need to select the appropriate ring pattern on the printer.

  ➡ Setting DRPD Ring Pattern (US and Canada only)
- **For Network switch**

  The name of this service varies depending on the country or region of purchase. This setting may not be also available depending on the country or region of purchase.

Changing Paper Settings

This printer prints received faxes to paper loaded in the printer beforehand. You can use the operation panel to change the paper settings for printing faxes. Make sure that the settings are appropriate for the loaded paper.

Important

- If the size of loaded paper is different from that specified in the paper size setting, the received faxes are stored in the printer's memory and **Check the page size and tap [OK].** is displayed on the touch screen. In this case, load the same size of paper as that specified in the paper size setting, and then select **OK**.

  You can also press the **Stop** button to close the message and print the stored documents in the printer's memory later.

  ➡ Printing Document in Printer's Memory

- If no paper is loaded, or paper has run out while printing is in progress, the received faxes are stored in the printer's memory and the error message for no paper is displayed on the touch screen. In this case, load paper and select **OK**.

  You can also press the **Stop** button to close the message and print the stored documents in the printer's memory later.

  ➡ Printing Document in Printer's Memory

Note

- If the sender sends a document that is larger than Letter-size or Legal-size, such as 11 x 17 inches, the sender's device may send the fax automatically reduced in size or divided, or send only a part of the original.

1. Check that printer is turned on.

2. Select **FAX** on the HOME screen.

   ➡ Using Touch Screen

   The Fax standby screen is displayed.

3. Select **Function list**.

   The **Function list** screen is displayed.

4. Select **Fax paper settings**.

   The **Fax paper settings** screen is displayed.

5. Specify settings.

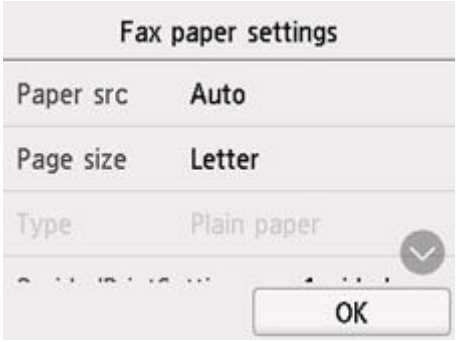

Page size

Select the page size from **A4**, **Letter**, or **Legal**.

Type (Media type)

The paper type is set to **Plain paper**.

Paper src

Select a paper source (**Rear tray**/**Cassette**/**Auto**) where paper is loaded.

Note

- When **Auto** is selected, paper is fed from the paper source where the paper that matches the paper settings (page size and media type) is loaded.

2-sidedPrintSetting

Select two-sided printing or single-sided printing.

Two sided printing is available for black & white faxes. Color faxes are printed on the single-side of paper regardless of this setting.

After **2-sided** is selected for **2-sidedPrintSetting**, select **Advanced** to specify the stapling side.

Note

- When **Page size** is set to **A4** or **Letter**, the received faxes are printed on the two-sides of paper.

6. Select **OK**.

Memory Reception

If the printer was not able to print the received fax, the received fax is stored in the printer's memory. The **FAX Memory** lamp is lit and **Fax received. Saved in memory.** is displayed at the Fax standby screen.

Important

- If you unplug the power cord, all faxes stored in the printer's memory are deleted. The next time you turn the printer on, select **OK** after a confirmation screen is displayed. The list of the faxes deleted from the printer's memory (MEMORY CLEAR REPORT) will be printed.

If the printer receives a fax under one of the following conditions, the received fax will be automatically stored in the printer's memory.

- **The printer is set to store received faxes in its memory:**

  When **Do not print** is selected for **Received documents** in **Auto print settings** under **FAX settings**, the received faxes are stored in the printer's memory.

  You can print the faxes stored in the printer's memory from the **Memory reference** screen in the Fax menu.

  ➡ Printing Document in Printer's Memory

  ### Note

  - To print the received faxes automatically, select **Print** for **Received documents** in **Auto print settings** under **FAX settings**.

    ➡ Auto print settings

- **An error has occurred on the printer:**

  If you select **Print** for **Received documents** in **Auto print settings** under **FAX settings**, a received fax will be printed automatically. However, if any of the following errors occurs, the received fax will not be printed. It will instead be stored in the printer's memory.

  When the error is resolved, the fax stored in the printer's memory is printed automatically.

  - The amount of remaining ink is insufficient to print a fax:

    Replace the ink tank.

    ➡ Replacing Ink Tanks

    ### Note

    - You can set the printer to forcibly print a received fax even if the ink has run out.

      Set **Print when out of ink** in **Auto print settings** under **FAX settings** to **Print**.

      However, part or all of the fax may not be printed since the ink has run out.

      Also, the contents of the fax will not be stored in the printer's memory.

      If the ink has already run out, we recommend that **Do not print** be selected for **Received documents** in **Auto print settings** under **FAX settings** to store the received fax in the printer's memory. After you replace the ink tank and select **Print** for **Received documents** in **Auto print settings**, the fax stored in the printer's memory will be printed automatically.

➡ Auto print settings

- Paper has run out:

  Load the paper and select **OK** on the touch screen.

- A different size of paper from that specified by **Page size** in **Fax paper settings** is loaded:

  Load the same size of paper as that specified by **Page size** in **Fax paper settings**, and then select **OK** on the touch screen.

- **You pressed the Stop button to cancel printing of a fax:**

  Press the **HOME** button and select **FAX** to resume printing of the fax.

Note

- The printer can store up to max. 250 pages* (max. 30 documents) of faxes in the printer's memory.

  * When using ITU-T No.1 chart (Standard mode)

- If the printer's memory becomes full during memory reception, only pages which already have been received are stored in the memory. Print the received faxes stored in the printer's memory and then delete them from the printer's memory and have the sender resend the faxes.

  ➡ Document Stored in Printer's Memory

Other Useful Fax Functions

- Document Stored in Printer's Memory

Document Stored in Printer's Memory

If the sending faxes is not complete or the printer was not able to print the received faxes, these faxes are stored in the printer's memory.

If an error occurred during a fax transmission, the document is not stored in the printer's memory.

In the following cases, the printer is not able to print the received fax and will automatically store the fax in its memory.

- The amount of remaining ink is insufficient to print a fax.
- Paper has run out.
- A different size of paper from that specified by **Page size** in **Fax paper settings** is loaded.
- **Do not print** is selected for **Received documents** in **Auto print settings** under **FAX settings**.
- You pressed the **Stop** button to cancel printing of a received fax.

Important

- If you unplug the power cord of the printer, all faxes stored in the printer's memory are deleted.

  For details on how to unplug the power cord, refer to Unplugging the Printer.

You can print or delete the faxes stored in the printer's memory.

- To print a document in the printer's memory:

  ➡ Printing Document in Printer's Memory

- To delete a document in the printer's memory:

  ➡ Deleting Document in Printer's Memory

Note

- When confirming, printing, or deleting a document stored in the printer's memory, you specify it by its transaction number. If you do not know the transaction number for your target document, print the list of documents (MEMORY LIST) first.

  For details on how to print MEMORY LIST, see Printing Document in Printer's Memory.

Printing Document in Printer's Memory

You can print a specified document in the printer's memory or print all the received documents in its memory at a time.

When printing a specified document, you specify it by its transaction number. If you do not know the transaction number for your target document, print the list of documents (MEMORY LIST) first.

1. Check that printer is turned on.

2. Load paper.

3. Select **FAX** on the HOME screen.

   ➡ Using Touch Screen

   The Fax standby screen is displayed.

4. Select **Function list**.

   The **Function list** screen is displayed.

5. Select **Memory reference**.

   The memory list is displayed.

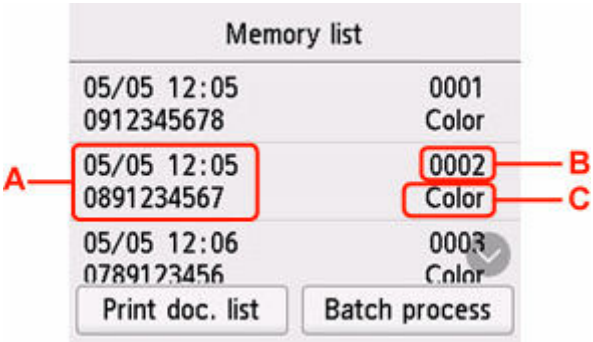

   A: Date and time of transaction and fax/telephone number

   B: Transaction number (TX/RX NO.)

   A transaction number from "0001" to "4999" indicates a document being sent.

   A transaction number from "5001" to "9999" indicates a document being received.

   C: **Color** is displayed for color transmission/reception. Nothing is displayed for black & white transmission/reception.

   Note

   - If no document is stored in the printer's memory, **There is no document in memory.** is displayed. Select **OK** to return to the previous screen.

6. Select a print menu.

- To print the memory list (MEMORY LIST):

  You can print a list of the documents in the printer's memory by selecting **Print doc. list**.

  When the print confirmation screen is displayed, select **Yes**. The printing starts.

  MEMORY LIST shows the transaction number of the unsent or unprinted fax (TX/RX NO.), transaction mode, recipient's number, and the date and time of the transaction.

  A transaction number from "0001" to "4999" on MEMORY LIST indicates a document being sent. A transaction number from "5001" to "9999" on MEMORY LIST indicates a document being received.

- To specify a document to print:

  Select a document to print on the **Memory list** screen, select **Print specified document**.

  Note

  - If the specified document is not stored in the printer's memory, **There is no document that can be printed.** is displayed. Select **OK** to return to the previous screen.

  The confirmation screen to select whether to print only the first page of the document is displayed.

  If you select **Yes**, only the first page of the document will be printed. The document is still stored in the printer's memory.

  If you select **No**, all pages of the document will be printed. The screen to confirm whether to delete the printed document in the printer's memory is displayed after printing.

- To print all the received documents stored in the printer's memory:

  Select **Batch process**, and then select **Print all RX documents**.

  When the print confirmation screen is displayed, select **Yes**. All the documents in the printer's memory are printed.

  Each time a document is printed, the screen to confirm whether to delete the printed document in the printer's memory is displayed.

  If you select **Yes**, the printed document in the printer's memory is deleted.

Deleting Document in Printer's Memory

You can delete a specified document in the printer's memory or delete all the documents in its memory at a time.

Note

- When deleting a specified document, you specify it by its transaction number. If you do not know the transaction number for your target document, print the list of documents (MEMORY LIST) first.

  ➡ Printing Document in Printer's Memory

1. Check that printer is turned on.

2. Select **FAX** on the HOME screen.

   ➡ Using Touch Screen

   The Fax standby screen is displayed.

3. Select **Function list**.

   The **Function list** screen is displayed.

4. Select **Memory reference**.

   The memory list is displayed.

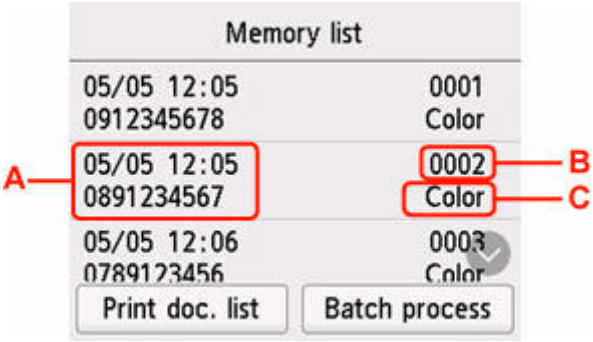

   A: Date and time of transaction and fax/telephone number

   B: Transaction number (TX/RX NO.)

   A transaction number from "0001" to "4999" indicates a document being sent.

   A transaction number from "5001" to "9999" indicates a document being received.

   C: **Color** is displayed for color transmission/reception. Nothing is displayed for black & white transmission/reception.

   Note

   - If no document is stored in the printer's memory, **There is no document in memory.** is displayed. Select **OK** to return to the previous screen.

5. Select a delete menu.

- To specify a document to delete:

  Select a document to delete on the **Memory list** screen, select **Delete specified doc.**.

  Note

  - If the specified document is not stored in the printer's memory, **There is no document that can be deleted.** is displayed. Select **OK** to return to the previous screen.

  The confirmation screen is displayed.

  If you select **Yes**, the specified document is deleted from printer's memory.

- To delete all documents stored in the printer's memory:

  Select **Batch process**, and then select **Delete all documents**.

  The confirmation screen is displayed.

  If you select **Yes**, all documents are deleted from printer's memory.

Frequently Asked Questions

Network

- Cannot Find Printer on Network
- Cannot Find Printer while Using Wi-Fi
- Network Key (Password) Unknown
- Cannot Print or Connect

For other questions about network, click here.

Print

- Printer Does Not Print
- Printouts Are Blank/Blurry or Fuzzy/Inaccurate or Bleeding Colors/Streaks or Lines
- Printout Results Are Unsatisfactory
- What to Do When Paper Is Jammed
- Cannot Print or Connect

Installation

- Failed to MP Drivers Installation (Windows)

Fax

- Cannot Send a Fax
- Cannot Print a Fax/"Fax received. Saved in memory." Appears
- Cannot Receive a Fax/Cannot Receive a Color Fax
- FAX Setup Guide

Error

- When Error Occurred
- Message (Support Code) Appears

Solve Problems

Printer Does Not Work

- Printer Does Not Turn On
- Printer Turns Off Unexpectedly or Repeatedly
- Wrong Language Appears in Touch Screen
- Display on Touch Screen Is Off
- USB Connection Problems
- Cannot Communicate with Printer via USB

- Printer Does Not Print
- Copying/Printing Stops
- Cannot Print Using AirPrint
- Printer Prints Slowly

- Ink Does Not Come Out
- What to Do When Paper Is Jammed
- Printer Does Not Pick up or Feed the Paper/"No Paper" Error
- Automatic Duplex Printing Problems
- Paper Does Not Feed from Paper Source Specified in Printer Driver (Windows)
- Printout Results Are Unsatisfactory
- Scanning Problems (Windows)
- Scanning Problems (macOS)
- Scan Results Are Unsatisfactory (Windows)
- Scan Results Are Unsatisfactory (macOS)
- Cannot Print/Scan from Smartphone/Tablet
- Cannot Send a Fax
- Cannot Print a Fax/"Fax received. Saved in memory." Appears
- Cannot Receive a Fax/Cannot Receive a Color Fax
- Cannot Dial
- Telephone Disconnects During a Call

Cannot Set Correctly (Network)

- Cannot Find Printer During Setup
- Cannot Find Printer while Using Wi-Fi
- Printer Suddenly Stopped Working for Some Reason
- Network Key (Password) Unknown
- Forgot Administrator Password of Printer
- Printer Cannot Be Used After Replacing Wireless Router or Changed Router Settings
- Message Appears on Computer During Setup
- Checking Network Information
- Restoring to Factory Defaults

Cannot Set Correctly (Installation)

- Failed to MP Drivers Installation (Windows)
- Updating MP Drivers in Network Environment (Windows)

Error or Message Appears

- When Error Occurred
- Message (Support Code) Appears
- A Message for Faxing Is Displayed on Fax Standby Screen
- List of Support Code for Error
- Error Message Appears on PictBridge (Wi-Fi) Compliant Device
- IJ Scan Utility Error Messages (Windows)
- IJ Scan Utility Lite Error Messages (macOS)
- ScanGear (Scanner Driver) Error Messages (Windows)

Operation Problems

- Network Communication Problems
- Printing Problems
- Problems while Printing/Scanning from Smartphone/Tablet
- Scanning Problems (Windows)

- Scanning Problems (macOS)
- Faxing Problems
- Mechanical Problems
- Installation and Download Problems
- Errors and Messages
- If You Cannot Solve a Problem

Network Settings and Common Problems

Here are frequently asked questions on network. Select a connection method you are using, or you want to use.

Wireless LAN

Wireless Direct

Wireless LAN

Cannot Find Printer

- Cannot Find Printer while Using Wi-Fi
- Cannot Find Printer During Setup
- Cannot Proceed beyond Printer Connection Screen (Cannot Find Printer Connected via USB)
- Searching Printer by IP Address or Host Name During Setup
- Error Occurs During Wi-Fi Setup
- Detect Same Printer Name
- Reconfiguration Method of Wi-Fi Connection

Cannot Print or Connect

- Printer Suddenly Stopped Working for Some Reason
- Printer Cannot Be Used After Replacing Wireless Router or Changed Router Settings
- Cannot Access to Internet on Wi-Fi from Communication Device
- Connecting Printer and Wireless Router Using Easy wireless connect
- Cannot Connect Smartphone/Tablet to Wireless Router
- Error Occurs During Wi-Fi Setup
- Connects to Another Computer via LAN/Changes from USB to LAN Connection
- Cannot Print or Connect

LAN Setting Tips/Changing LAN Settings

- Network Key (Password) Unknown
- Forgot Administrator Password of Printer
- Checking Network Information
- Restoring to Factory Defaults
- Checking Wireless Router SSID/Key
- Checking Wireless Router Network Name (SSID) for Smartphone/Tablet
- Privacy Separator/SSID Separator/Network Separation Function
- Default Network Settings
- Connects to Another Computer via LAN/Changes from USB to LAN Connection
- Printing Network Settings
- Reconfiguration Method of Wi-Fi Connection
- Checking Status Code

Printing/Scanning from Smartphone/Tablet

- Connecting Printer and Wireless Router Using Easy wireless connect
- Cannot Connect Smartphone/Tablet to Wireless Router
- Checking Wireless Router Network Name (SSID) for Smartphone/Tablet
- Setting Up Using Smartphone/Tablet
- Cannot Print/Scan from Smartphone/Tablet
- Downloading Canon PRINT Inkjet/SELPHY

Problems while Using Printer

- Message Appears on Computer During Setup
- Printer Prints Slowly
- No Ink Level Appears in Printer Status Monitor (Windows)

Wireless Direct

Cannot Print or Connect

- Printer Suddenly Stopped Working for Some Reason
- Cannot Access to Internet on Wi-Fi from Communication Device
- Cannot Print or Connect

LAN Setting Tips/Changing LAN Settings

- Network Key (Password) Unknown
- Forgot Administrator Password of Printer
- Checking Network Information
- Restoring to Factory Defaults
- Default Network Settings
- Printing Network Settings
- Reconfiguration Method of Wi-Fi Connection
- Checking Status Code

Printing/Scanning from Smartphone/Tablet

- Cannot Print/Scan from Smartphone/Tablet
- Downloading Canon PRINT Inkjet/SELPHY

Problems while Using Printer

- Message Appears on Computer During Setup
- Printer Prints Slowly
- No Ink Level Appears in Printer Status Monitor (Windows)

Network Communication Problems

- Cannot Find Printer on Network
- Network Connection Problems
- Other Network Problems

Cannot Find Printer on Network

- Cannot Find Printer During Setup

While using printer:

- Cannot Find Printer while Using Wi-Fi

Cannot Find Printer During Setup

If you cannot find the printer on network during setup, check the following.

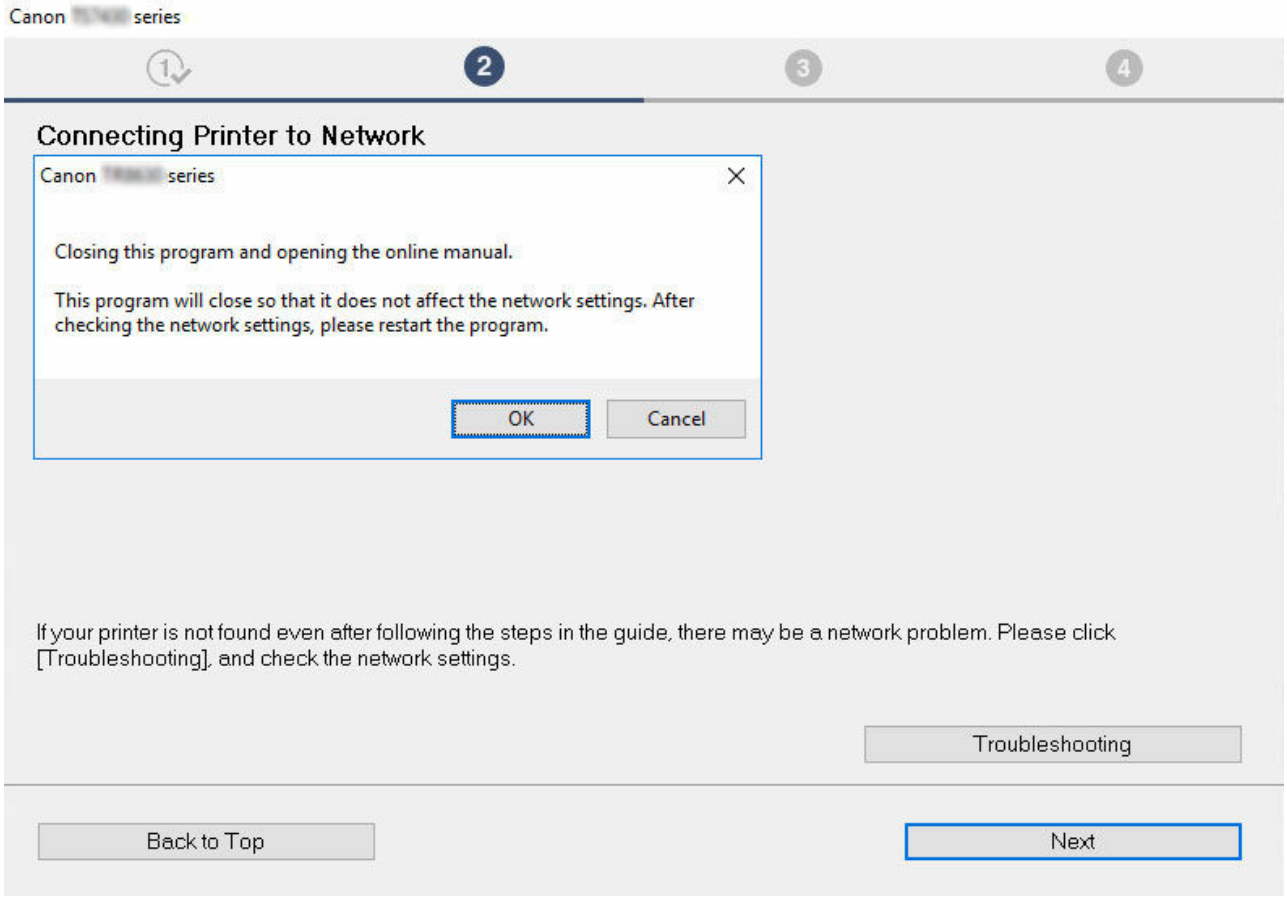

When you complete all the checking, try to set up from the beginning.

Items to check for Wi-Fi:

When connecting the printer to Wi-Fi, check/respond to all the items in [Step 1], and try to set up from the beginning. If you still cannot set up the **printer** properly, try the items in [Step 2] and try to set up from the beginning.

Step 1 Check the basic items for Wi-Fi

Step 2 Solve the problem, using IJ Network Device Setup Utility

Items to check for Wi-Fi

Step 1 Check the basic items for Wi-Fi

1. Check power status

   Are printer and network device (router, etc.) turned on?

   Stop setting up, and check if the router (modem) is turned on and then check if the printer is turned on.

   1. Check if network devices such as router are turned on.

      If network devices are not turned on, turn on the power. If the network devices are on, turn them off and on again.

      It may take a while for the network device to become ready for use once they are turned on.

Proceed once the network devices such as router are ready for use.

2. Check if the printer is turned on

   If printer is not turned on, turn on the power. If the printer is on, turn them off and on again.

Proceed once you complete checking the power status above.

2. Check PC network connection

Can you view any web pages on your computer? Make sure the computer and network device (wireless router, etc.) are configured and the computer is connected to the network.

If you cannot view web pages on your computer, check wireless router network connection settings, such as IP address filtering, MAC address filtering, and DHCP function.

For more on checking the settings of the wireless router, refer to the instruction manual supplied with the wireless router or contact the manufacturer.

Important

- Depending on the wireless router, note that different network name (SSID) is assigned for a bandwidth (2.4 GHz or 5 GHz) or its usage (for PC or game machine), using alphanumeric characters at the end of network name (SSID).

Once you complete checking the wireless router, configure the network settings for your computer. For the procedures, refer to the instruction manual supplied with the computer, or contact the manufacturer.

Once you complete setting up the wireless router and your computer, configure the settings on your computer in order to view web pages, using the information of the wireless router.

Proceed once you complete checking the network connection above.

3. Check printer's Wi-Fi settings

Make sure the or icon is displayed on the touch screen.

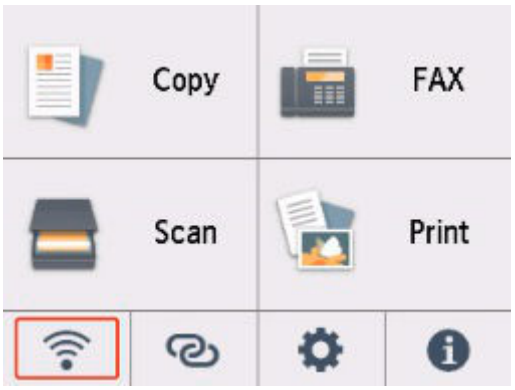

If icon is not displayed:

The printer is not set to use Wi-Fi. Turn on wireless communication on the printer.

If icon is displayed:

icon indicates that the wireless router and the printer are not connected. Reconsider the locations of the wireless router and the printer.

- Checking the location of wireless router:

  After checking the wireless router setting, make sure the printer is not placed too far away from the wireless router. The printer can be up 50 m (164 ft.) from the wireless router indoors if unobstructed. The printer is designed for indoor use. Make sure the printer is close enough to the wireless router to be used.

  Place the printer and wireless router where there are no obstacles between them. Wireless communication between different rooms or floors is generally poor. Wireless communication can be impeded by building materials containing metal or concrete. If the printer cannot communicate with the computer over a Wi-Fi due to a wall, place the printer and the computer in the same room.

  In addition, if a device like a microwave oven that emits radio waves of the same frequency bandwidth as a wireless router is nearby, it may cause interference. Place the wireless router as far away from interference sources as possible.

- Checking the location of printer:

Make sure that the printer is not placed behind an object. The printer may not be connected when placed behind a wall or on a shelf. Try to place the printer in a location where there is no obstacle.

For details, see the instruction manual supplied with the wireless router or contact the manufacturer.

When you complete checking [Step 1] above, try to set up from the beginning.

If the printer cannot be detected after trying to set up from the beginning, proceed to [Step 2].

Step 2 Solve the Problem, Using IJ Network Device Setup Utility

Diagnose and repair the network connections using IJ Network Device Setup Utility.

Download IJ Network Device Setup Utility from the below page, and install it on your computer.

➡ Checking Printer Connection Status Using IJ Network Device Setup Utility

Refer to below in regard to starting up IJ Network Device Setup Utility.

- **For Windows:**

  ➡ Starting Up IJ Network Device Setup Utility

- **For macOS:**

  ➡ Starting Up IJ Network Device Setup Utility

Once revised, try to set up from the beginning.

Q

Cannot Proceed beyond Printer Connection Screen (Cannot Find Printer Connected via USB)

A

If you cannot proceed beyond the **Printer Connection** screen, check the following.

Check1 Make sure USB cable is securely plugged in to printer and computer.

Connect the printer and the computer using a USB cable as the illustration below. The USB port is located at the back of the printer.

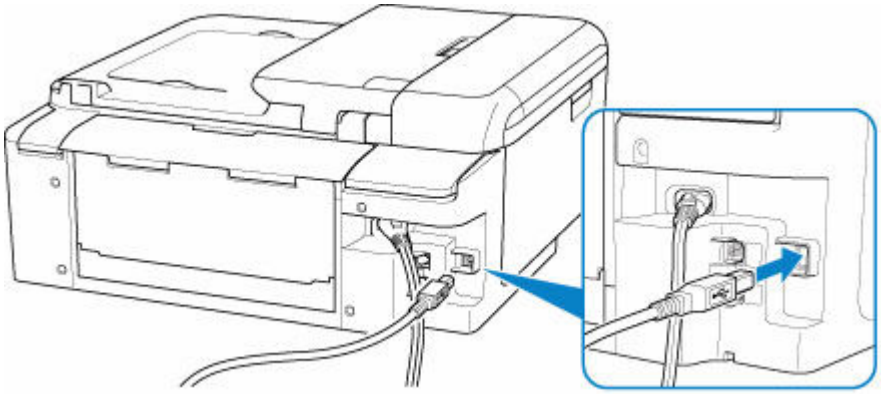

Important

- Check the orientation of the "Type-B" connector and connect to the printer. For details, refer to the instruction manual supplied with the USB cable.

Check2 Follow procedure below to connect printer and computer again.

Important

- For macOS, make sure the lock icon is on the lower left of the **Printers & Scanners** screen.

  If the icon (locked) is displayed, click the icon to unlock. (The administrator name and the password are necessary to unlock.)

1. Unplug USB cable from printer and computer and connect it again.
2. Make sure no printer operation is in progress and turn off.
3. Turn on printer.

Check3 Follow the steps below to install MP Drivers again.

1. Download the latest MP Drivers.

2. Turn off printer.

3. Shut down computer.

   After shutting down, restart your computer and install the latest MP Drivers downloaded in step 1.

Cannot Find Printer while Using Wi-Fi

First, make sure printer is turned on. Next, make sure that you can view any web page on the Internet with your computer. After confirming the two, use the IJ Network Device Setup Utility to diagnose and repair network status.

Select the link below to download IJ Network Device Setup Utility and install it.

➡ Checking Printer Connection Status Using IJ Network Device Setup Utility

See below for starting up IJ Network Device Setup Utility.

- **For Windows:**
  - ➡ Starting Up IJ Network Device Setup Utility
- **For macOS:**
  - ➡ Starting Up IJ Network Device Setup Utility

If the problem persists after diagnosis and repair with IJ Network Device Setup Utility, check the following items.

Check1 Check the (**Network status**) icon on the touch screen.

If the icon is displayed, or only the icon is displayed, wireless LAN is disabled.

Select **LAN settings** > **Wi-Fi** in this order, and select **Enable** for **Enable/disable Wi-Fi**.

If the icon is displayed, see the following check to make sure whether printer setup is complete or the settings of wireless router to connect are correct.

Check2 Make sure printer setup is complete on the computer.

If it is not, click here and perform setup.

Check3 Make sure printer and wireless router network settings match.

Make sure the network settings of the printer (e.g. network name (SSID) or network key (password), etc.) are identical with those of the wireless router.

To check the settings of the wireless router, refer to the instruction manual provided with it or contact its manufacturer.

Note

- Use 2.4 GHz frequency band to connect to a wireless router. Match the network name (SSID) set for the printer with that for 2.4 GHz frequency band of the wireless router.

To check the network name (SSID) set for the printer, display it using the operation panel of the printer or print out the network setting information of the printer.

- Display on the touch screen.

  ➡ LAN settings

- Print the network settings.

  ➡ Printing Network Settings

Check4 Make sure the printer is not placed too far away from the wireless router.

If the distance between the printer and wireless router is too far, wireless communication becomes poor. Place the printer and wireless router close to each other.

Check5 Make sure wireless signal is strong. Monitor signal strength and move printer and wireless router as necessary.

Place the printer and wireless router where there are no obstacles between them. Wireless communication between different rooms or floors is generally poor. Wireless communication can be impeded by building materials containing metal or concrete. If the printer cannot communicate with the computer over a Wi-Fi due to a wall, place the printer and the computer in the same room.

In addition, if a device like a microwave oven that emits radio waves of the same frequency bandwidth as a wireless router is nearby, it may cause interference. Place the wireless router as far away from interference sources as possible.

Check the signal strength on the touch screen.

➡ Using Touch Screen

Check6 Make sure **Enable bidirectional support** is selected in the **Ports** sheet of the **Printer properties** dialog box. (Windows)

If not, select it to enable bidirectional support.

Check7 Make sure security software's firewall is off.

If your security software's firewall is on, a message may appear warning you that Canon software is attempting to access the network. If this warning message appears, set security software to always allow access.

If you are using any programs that switch between network environments, check their settings. Some programs use a firewall by default.

Check8 If printer is connected to an AirPort Base Station via LAN, make sure you use alphanumeric characters for network name (SSID). (macOS)

If the problem is not resolved, click here and redo setup.

Network Connection Problems

- Printer Suddenly Stopped Working for Some Reason
- Network Key (Password) Unknown
- Printer Cannot Be Used After Replacing Wireless Router or Changed Router Settings

Printer Suddenly Stopped Working for Some Reason

First, make sure printer is turned on. Next, make sure that you can view any web page on the Internet with your computer. After confirming the two, use the IJ Network Device Setup Utility to diagnose and repair network status.

Select the link below to download IJ Network Device Setup Utility and install it.

➡ Checking Printer Connection Status Using IJ Network Device Setup Utility

See below for starting up IJ Network Device Setup Utility.

- **For Windows:**
  - ➡ Starting Up IJ Network Device Setup Utility
- **For macOS:**
  - ➡ Starting Up IJ Network Device Setup Utility

If the problem persists after diagnosis and repair with IJ Network Device Setup Utility, check the following items.

➡ Cannot Connect to a Printer after Network Configuration Changes
➡ Cannot Connect to a Printer via Wireless LAN (Wi-Fi)
➡ Cannot Connect to a Printer through Wireless Direct
➡ Cannot Print/Scan/Fax through Network

Q Cannot Connect to a Printer after Network Configuration Changes

A

It may take a while for the computer to obtain an IP address, or you may need to restart your computer.

Make sure the computer has obtained a valid IP address, and try again to find the printer.

Q Cannot Connect to a printer via Wireless LAN (Wi-Fi)

A

Check1 Check the power status of printer, network devices (e.g. wireless router), and smartphone/tablet.

- Turn on the printer or devices.
- If the power is already turned on, cycle the power switch.
- It may be necessary to resolve wireless router problems (e.g. update interval of a key, problems of DHCP update interval, energy saving mode, etc.) or to update the wireless router firmware.

For details, contact the manufacturer of your wireless router.

Check2 Is the printer connected to the wireless router?

Use the icon on the touch screen to check the connection status between the printer and wireless router. If the icon is not displayed, Wi-Fi is disabled. Turn on wireless communication on the printer.

Check3 Make sure the printer and wireless router network settings match.

Make sure the network settings of the printer (e.g. network name (SSID) or network key (password), etc.) are identical with those of the wireless router.

Communication with a wireless router must be tuned to either the 2.4 GHz or 5 GHz frequency band. The network name (SSID) of the 2.4 GHz frequency band and the network name (SSID) of the 5 GHz frequency band cannot be used in combination.

Check the network name (SSID) set for the printer, and match it with the network name (SSID) of the correct frequency band of the Wi-Fi router.

To check the settings of the wireless router, refer to the instruction manual provided with it or contact its manufacturer.

To check the current network settings of the printer, display it using the operation panel of the printer or print out the network setting information of the printer.

- Display on the touch screen.

  ➡ LAN settings

- Print the network settings.

  ➡ Printing Network Settings

Check4 Make sure the printer is not placed too far away from the wireless router.

If the distance between the printer and wireless router is too far, wireless communication becomes poor. Place the printer and wireless router close to each other.

Check5 Make sure wireless signal is strong. Monitor signal status and move printer and wireless router as necessary.

Place the printer and wireless router where there are no obstacles between them. Wireless communication between different rooms or floors is generally poor. Wireless communication can be impeded by building materials containing metal or concrete. If the printer cannot communicate with the computer over a Wi-Fi due to a wall, place the printer and the computer in the same room.

In addition, if a device like a microwave oven that emits radio waves of the same frequency bandwidth as a wireless router is nearby, it may cause interference. Place the wireless router as far away from interference sources as possible.

Check the signal strength on the touch screen.

➡ Using Touch Screen

Check6 Make sure of the Wi-Fi channel numbers used for your computer.

You need to have the same Wi-Fi channel number that you are using for the wireless router as your computer. It is normally set in the way that you can use all the Wi-Fi channels. However, when the channels that you are using are restricted, the Wi-Fi channels do not match.

See the instruction manual provided with your computer and check the Wi-Fi channel number available for your computer.

Check7 Make sure channel set on wireless router is a usable channel as confirmed in the previous check.

If it is not, change the channel set on the wireless router.

Check8 Make sure security software's firewall is off.

If your security software's firewall is on, a message may appear warning you that Canon software is attempting to access the network. If this warning message appears, set security software to always allow access.

If you are using any programs that switch between network environments, check their settings. Some programs use a firewall by default.

Check9 If printer is connected to an AirPort Base Station via LAN, make sure you use alphanumeric characters for network name (SSID). (macOS)

If the problem is not resolved, click here and redo setup.

- **Positioning:**

  Make sure there are no obstacles between the printer and the wireless router.

Q Cannot Connect to a Printer through Wireless Direct

A

Check1 Is the icon displayed on the touch screen?

If not, Wireless Direct is disabled. Turn on Wireless Direct.

Check2 Check the settings of your device (smartphone/tablet).

Make sure Wi-Fi is enabled on your device.

For details, refer to your device's instruction manual.

Check3 Make sure printer is selected as connection for device (e.g. smartphone or tablet).

Select the network name (SSID) for Wireless Direct specified for the printer as the connection destination for devices.

Check the destination on your device.

For details, refer to your device's instruction manual or visit the manufacturer's website.

To check the network name (SSID) for Wireless Direct specified for the printer, display it using the operation panel of the printer or print out the network setting information of the printer.

- Display on the touch screen.

  ➡ LAN settings

- Print the network settings.

  ➡ Printing Network Settings

Check4 Have you entered the proper password specified for the Wireless Direct?

To check the password specified for the printer, display it using the operation panel of the printer or print out the network setting information of the printer.

- Display on the touch screen.

  ➡ LAN settings

- Print the network settings.

  ➡ Printing Network Settings

Check5 Make sure the printer is not placed too far away from the device.

If the distance between the printer and device is too far, wireless communication becomes poor. Place the printer and device close to each other.

Check6 Make sure 5 devices are already connected.

Wireless Direct does not allow more than 5 devices to be connected.

Q Cannot Print/Scan/Fax through Network

A

Check1 Make sure the computer is connected to the wireless router.

For more on how to check the computer settings or connection status, see your computer instruction manual or contact its manufacturer.

Check2 If MP Drivers are not installed, install them. (Windows)

Click here and install the MP Drivers.

Check3 Make sure wireless router does not restrict which computers and printers can access it.

For more on connecting to and setting up your wireless router, see the wireless router instruction manual or contact its manufacturer.

Note

- To check the MAC address or IP address of your computer, see Checking Computer IP Address or MAC Address.

Network Key (Password) Unknown

Use the IJ Network Device Setup Utility to diagnose and repair network status.

Select the link below to download IJ Network Device Setup Utility and install it.

➡ Checking Printer Connection Status Using IJ Network Device Setup Utility

See below for starting up IJ Network Device Setup Utility.

- **For Windows:**
  - ➡ Starting Up IJ Network Device Setup Utility
- **For macOS:**
  - ➡ Starting Up IJ Network Device Setup Utility

If the problem persists after diagnosis and repair with IJ Network Device Setup Utility, check the following items.

➡ WPA/WPA2 or WEP Key Set for Wireless Router Unknown, Cannot Connect
➡ Setting an Encryption Key

Q WPA/WPA2 or WEP Key Set for Wireless Router Unknown, Cannot Connect

A

For more on setting up a wireless router, see the instruction manual provided with the wireless router or contact its manufacturer. Make sure your computer can communicate with the wireless router.

Q Setting an Encryption Key

A

For more on setting up a wireless router, see the instruction manual provided with the wireless router or contact its manufacturer. Make sure your computer can communicate with the wireless router.

Selecting WPA, WPA2, or WPA/WPA2 is recommended for security reason. If your wireless router is compatible with WPA/WPA2, you can also use WPA2 or WPA.

- **Using WPA/WPA2 (Windows)**

  The authentication method, Wi-Fi password, and dynamic encryption type must be identical among the wireless router, the printer, and your computer.

  Enter the Wi-Fi password configured on the wireless router.

Either TKIP (basic encryption) or AES (secure encryption) is selected automatically as the dynamic encryption method.

For details, see If WPA/WPA2 Details Screen Appears.

Note

- This printer supports WPA/WPA2-PSK (WPA/WPA2-Personal) and WPA2-PSK (WPA2-Personal).

- **Using WEP**

The length or format of the Wi-Fi password and authentication method must be identical among the wireless router, the printer, and your computer.

To communicate with a wireless router that generates a password automatically, you must set the printer to use the password generated by the wireless router.

  - **For Windows:**

    When the **WEP Details** screen appears after you click **Search...** on the **Network Settings (Wi-Fi)** screen in IJ Network Device Setup Utility, follow the on-screen instructions to set the password length, format, and the password to use.

    For details, see If WEP Details Screen Appears.

Note

- If the printer is connected to an AirPort Base Station via LAN:

  If the printer is connected to an AirPort Base Station via a LAN, check the settings in **Wireless Security** of **AirPort Utility**.

  - Select **64 bit** if **WEP 40 bit** is selected for password length in AirPort Base Station.
  - Select **1** for the password to use. Otherwise, computer will not be able to communicate with printer via the wireless router.

Printer Cannot Be Used After Replacing Wireless Router or Changed Router Settings

When you replace a wireless router, redo the network setup for the printer according to the replaced one.

Click here and perform setup.

Note

- IJ Network Device Setup Utility allows you to diagnose and repair the network status.

  Select the link below to download IJ Network Device Setup Utility and install it.

  ➡ Checking Printer Connection Status Using IJ Network Device Setup Utility

  See below for starting up IJ Network Device Setup Utility.

  – **For Windows:**

    ➡ Starting Up IJ Network Device Setup Utility

  – **For macOS:**

    ➡ Starting Up IJ Network Device Setup Utility

If this does not solve the problem, see below.

➡ Cannot Communicate with Printer After Enabling MAC/IP Address Filtering or Encryption Key on Wireless Router
➡ With Encryption On, Cannot Communicate with Printer After Changing Encryption Type at Wireless Router

Cannot Communicate with Printer After Enabling MAC/IP Address Filtering or Encryption Key on Wireless Router

Check1 Check wireless router setting.

To check the wireless router setting, see the instruction manual provided with the wireless router or contact its manufacturer. Make sure the computer and the wireless router can communicate with each other under this setting.

Check2 If filtering MAC addresses or IP addresses at wireless router, check that MAC addresses or IP addresses for computer, network device, and printer are registered.

Check3 If using WPA/WPA2 key or a password, make sure encryption key for computer, network device, and printer matches key set for wireless router.

The length or format of the Wi-Fi password and authentication method must be identical among the wireless router, the printer, and your computer.

For details, see Setting an Encryption Key.

Q With Encryption On, Cannot Communicate with Printer After Changing Encryption Type at Wireless Router

A

If you change the encryption type for the printer and it subsequently cannot communicate with the computer, make sure the encryption type for the computer and the wireless router matches the type set for the printer.

➡ Cannot Communicate with Printer After Enabling MAC/IP Address Filtering or Encryption Key on Wireless Router

Other Network Problems

- Checking Network Information
- Restoring to Factory Defaults

Checking Network Information

- Checking Printer IP Address or MAC Address
- Checking Computer IP Address or MAC Address
- Checking Communication Between the Computer, the Printer, and the Wireless Router
- Checking Network Setting Information

Q Checking Printer IP Address or MAC Address

A

To check the printer's IP Address or MAC address, print out the network settings information or use the operation panel to display it.

- Display on the touch screen.
  - LAN settings
- Print the network settings.
  - Printing Network Settings

For Windows, you can check the network setting information on the computer screen.

- Canon IJ Network Device Setup Utility Screen

Q Checking Computer IP Address or MAC Address

A

To check the IP Address or MAC address of your computer, follow the instructions below.

- **For Windows:**

  1. Select **Command Prompt** from **Start**.
  2. Enter "ipconfig/all" and press **Enter**.

     The IP address and MAC address of your computer appear. If your computer is not connected to a network, the IP address does not appear.

- **For macOS:**

  1. Select **System Preferences** from Apple menu, and then click **Network**.
  2. Make sure network interface used by computer is selected, and then click **Advanced**.

     Make sure **Wi-Fi** is selected as network interface.
  3. Click **TCP/IP** to check the IP address, or click **Hardware** to check the MAC address.

Q Checking Communication Between the Computer, the Printer, and the Wireless Router

A

Perform a ping test to check if communication is taking place.

- **For Windows:**

  1. Select **Command Prompt** from **Start**.

  2. Type the ping command and press **Enter**.

     The ping command is as follows: ping XXX.XXX.XXX.XXX

     "XXX.XXX.XXX.XXX" is the IP address of the target device.

     If communication is taking place, a message like the one shown below appears.

     Reply from XXX.XXX.XXX.XXX: bytes=32 time=10ms TTL=255

     If **Request timed out** appears, communication is not taking place.

- **For macOS:**

  1. Start **Network Utility** as shown below.

     Select **Computer** from **Go** menu of Finder, double-click **Macintosh HD** > **System** > **Library** > **CoreServices** > **Applications** > **Network Utility**.

  2. Click **Ping**.

  3. Make sure **Send only XX pings** (XX are numbers) is selected.

  4. Enter IP address of target printer or target wireless router in **Enter the network address to ping**.

  5. Click **Ping**.

     "XXX.XXX.XXX.XXX" is the IP address of the target device.

     A message such as the following appears.

     64 bytes from XXX.XXX.XXX.XXX: icmp_seq=0 ttl=64 time=3.394 ms

     64 bytes from XXX.XXX.XXX.XXX: icmp_seq=1 ttl=64 time=1.786 ms

     64 bytes from XXX.XXX.XXX.XXX: icmp_seq=2 ttl=64 time=1.739 ms

     --- XXX.XXX.XXX.XXX ping statistics ---

     3 packets transmitted, 3 packets received, 0% packet loss

     If "100% packet loss" appears, communication is not taking place. Otherwise, computer is communicating with target device.

Checking Network Setting Information

To check the printer's network settings information, print out the network settings information or use the operation panel to display it.

- Display on the touch screen.

  ➡ LAN settings

- Print the network settings.

  ➡ Printing Network Settings

Restoring to Factory Defaults

Important

- Initialization erases all network settings on the printer, making printing or scanning operation from a computer over a network impossible. To use the printer over a network again after restoring it to the factory defaults, click here and redo setup.

Initialize the network setting using the printer's operation panel.

➡ Reset setting

Problems while Printing/Scanning from Smartphone/Tablet

- Cannot Print/Scan from Smartphone/Tablet

Cannot Print/Scan from Smartphone/Tablet

If you cannot print/scan from your smartphone/tablet, it is possible that your smartphone/tablet cannot communicate with the printer.

Check the cause of your problem according to the connection method.

- Cannot Communicate with Printer over Wireless LAN
- Cannot Communicate with Printer while It Is in Wireless Direct

Note

- For problems on printing with other connection methods or more on performing settings of each connection method:

  - Using PIXMA/MAXIFY Cloud Link
  - Printing from iOS Device (AirPrint)

Q Cannot Communicate with Printer over Wireless LAN

A

If your smartphone/tablet cannot communicate with the printer, check the following.

Check1 Check the power status of printer, network devices (e.g. wireless router), and smartphone/tablet.

- Turn on the printer or devices.
- If the power is already turned on, cycle the power switch.
- It may be necessary to resolve wireless router problems (e.g. update interval of a key, problems of DHCP update interval, energy saving mode, etc.) or to update the wireless router firmware.

For details, contact the manufacturer of your wireless router.

Check2 Check the settings of your device (smartphone/tablet).

Make sure Wi-Fi is enabled on your device.

For details, refer to your device's instruction manual.

Check3 Is the printer connected to the wireless router?

- Use the lower left icon on the touch screen to check the connection status between the printer and wireless router. If the icon is not displayed, Wi-Fi is disabled. Turn on wireless communication on the printer.
- Make sure the network settings of the printer (e.g. network name (SSID) or network key (password), etc.) are identical with those of the wireless router.

  To check the settings of the wireless router, refer to the instruction manual provided with it or contact its manufacturer.

To check the current network settings of the printer, display it using the operation panel of the printer or print out the network setting information of the printer.

- Display on the touch screen.

  ➡ LAN settings

- Print the network settings.

  ➡ Printing Network Settings

Note

- If you have a computer, IJ Network Device Setup Utility allows you to diagnose and repair the network status.

  Select the link below to download IJ Network Device Setup Utility and install it.

  ➡ Checking Printer Connection Status Using IJ Network Device Setup Utility

  See below for starting up IJ Network Device Setup Utility.

  — **For Windows:**

  ➡ Starting Up IJ Network Device Setup Utility

  — **For macOS:**

  ➡ Starting Up IJ Network Device Setup Utility

Check4 Are network settings of your smartphone/tablet identical with those of wireless router?

Make sure the network settings of the printer (e.g. network name (SSID) or network key (password), etc.) are identical with those of the wireless router.

To check the settings of your smartphone/tablet, refer to the instruction manual provided with it.

If the network settings of your smartphone/tablet are not identical with those of the wireless router, change the network settings of it to match with those of the wireless router.

Check5 Make sure the printer is not placed too far away from the wireless router.

If the distance between the printer and wireless router is too far, wireless communication becomes poor. Place the printer and wireless router close to each other.

Check6 Make sure wireless signal is strong. Monitor signal status and move printer and wireless router as necessary.

Place the printer and wireless router where there are no obstacles between them. Wireless communication between different rooms or floors is generally poor. Wireless communication can be impeded by building materials containing metal or concrete. If the printer cannot communicate with the computer over a Wi-Fi due to a wall, place the printer and the computer in the same room.

In addition, if a device like a microwave oven that emits radio waves of the same frequency bandwidth as a wireless router is nearby, it may cause interference. Place the wireless router as far away from interference sources as possible.

Check the signal strength on the touch screen.

➡ Using Touch Screen

Q Cannot Communicate with Printer while It Is in Wireless Direct

A

If your smartphone/tablet cannot communicate with the printer in the Wireless Direct, check the following.

Check1 Check the power status of printer and other devices (smartphone or tablet).

Turn on the printer or devices.

If the power is already turned on, cycle the power switch.

Check2 Is the icon displayed on the touch screen?

If not, Wireless Direct is disabled. Turn on Wireless Direct.

Check3 Check the settings of your device (smartphone/tablet).

Make sure Wi-Fi is enabled on your device.

For details, refer to your device's instruction manual.

Check4 Make sure printer is selected as connection for device (e.g. smartphone or tablet).

Select the network name (SSID) for Wireless Direct specified for the printer as the connection destination for devices.

Check the destination on your device.

For details, refer to your device's instruction manual or visit the manufacturer's website.

To check the network name (SSID) for Wireless Direct specified for the printer, display it using the operation panel of the printer or print out the network setting information of the printer.

- Display on the touch screen.

  ➡ LAN settings

- Print the network settings.

  ➡ Printing Network Settings

Check5 Have you entered the proper password specified for the Wireless Direct?

To check the password specified for the printer, display it using the operation panel of the printer or print out the network setting information of the printer.

- Display on the touch screen.

  ➡ LAN settings

- Print the network settings.

  ➡ Printing Network Settings

Check6 Make sure the printer is not placed too far away from the device.

If the distance between the printer and device is too far, wireless communication becomes poor. Place the printer and device close to each other.

Check7 Make sure 5 devices are already connected.

Wireless Direct does not allow more than 5 devices to be connected.

Printing Problems

- Printer Does Not Print
- Ink Does Not Come Out
- Printer Does Not Pick up or Feed the Paper/"No Paper" Error
- Printout Results Are Unsatisfactory

Q

Printer Does Not Print

A

Check1 Make sure printer is turned on.

If not, make sure the printer is securely plugged in and press **ON** button to turn on.

The **ON** lamp flashes while the printer is initializing. Wait until the **ON** lamp stops flashing and remains lit.

Note

- If you are printing large data such as photos or other graphics, printing may take longer to start. The **ON** lamp flashes while the computer is processing data and sending it to the printer. Wait until printing starts.

Check2 Make sure that the cassette is correctly inserted.

If there is an object under the printer, the cassette cannot be correctly inserted and paper may not be correctly fed.

Make sure there are no objects under the printer and push the cassette flatly into the printer until it stops.

➡ Loading Plain Paper in Cassette

Check3 Make sure printer is properly connected to computer.

If you are using a USB cable, make sure it is securely connected to both the printer and the computer. When the USB cable is securely plugged in, check the following:

- If you are using a relay device such as a USB hub, disconnect it, connect the printer directly to the computer, and retry the printing. If printing starts normally, there is a problem with the relay device. Contact the vendor of the relay device.
- There could also be a problem with the USB cable. Replace the USB cable and retry the printing.

If you use the printer with a network connection, make sure the printer is correctly set up for network use.

➡ Cannot Find Printer while Using Wi-Fi

Note

- IJ Network Device Setup Utility allows you to diagnose and repair the network status.

  Select the link below to download IJ Network Device Setup Utility and install it.

  ➡ Checking Printer Connection Status Using IJ Network Device Setup Utility

  See below for starting up IJ Network Device Setup Utility.

  – **For Windows:**

    ➡ Starting Up IJ Network Device Setup Utility

- **For macOS:**
  - Starting Up IJ Network Device Setup Utility

Check4 Make sure paper settings match information set for rear tray or cassette.

If the paper settings do not match the information set for the rear tray or the cassette, an error message appears on the touch screen. Follow the instructions on the touch screen to solve the problem.

Note

- You can select whether the message which prevents misprinting is displayed.
  - To change the message view setting when printing or copying using the printer's operation panel:
    - Feed settings
  - To change the message view setting when printing using the printer driver:
    - Changing the Printer Operation Mode (Windows)
    - Changing the Printer Operation Mode (macOS)

Check5 If printing from a computer, delete unnecessary print jobs.

- **For Windows:**
  - Deleting the Undesired Print Job
- **For macOS:**
  - Deleting the Undesired Print Job

Check6 Is your printer's printer driver selected when printing?

The printer will not print properly if you are using a printer driver for a different printer.

- **For Windows:**

  Make sure "Canon XXX series" (where "XXX" is your printer's name) is selected in the Print dialog box.

  Note

  - If multiple printers are registered to your computer, set your printer as default printer to make the one selected by default.

- **For macOS:**

  Make sure your printer's name is selected in **Printer** in the Print dialog.

  Note

  - If multiple printers are registered to your computer, select **Set as Default Printer** from **System Preferences** > **Printers & Scanners** for a printer to make the one selected by default.

Check7 Are you trying to print a large data file? (Windows)

If you are trying to print a large data file, it takes a long time to start printing.

If the printer does not start printing after a certain period of time, select **On** for **Prevention of Print Data Loss** on the **Print Options** dialog box.

For details, refer to Page Setup Tab Description.

Important

- Selecting **On** for **Prevention of Print Data Loss** may reduce print quality.
- After printing is completed, select **Off** for **Prevention of Print Data Loss**.

Check8 If printing from your computer, restart the computer.

Restart the computer and try printing again.

Ink Does Not Come Out

Check1 Check status of ink tanks. Replace ink tank if ink has run out.

- Checking Ink Status on the Touch Screen
- Replacing Ink Tanks

Check2 Are the orange tape and plastic wrap still on the ink tank?

Make sure all the protective plastic wrap is peeled off to expose the Y-vent area, as shown below (A).

If the orange tape remains on the ink tank (B), peel it off.

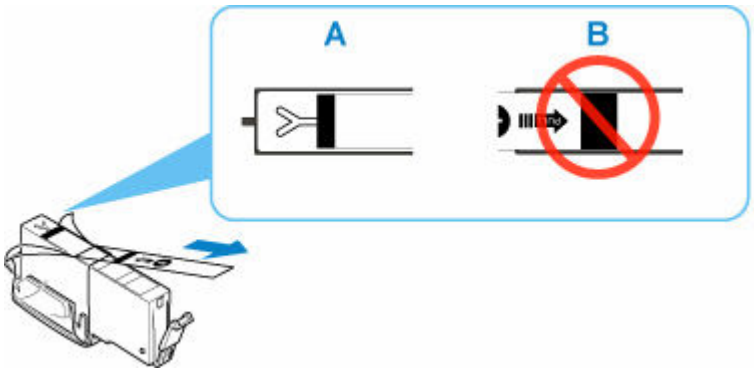

Check3 Are the print head nozzles clogged?

Print the nozzle check pattern to determine whether the ink ejects properly from the print head nozzles.

Step1 Print the nozzle check pattern.

After printing the nozzle check pattern, examine the pattern.

- **For Windows:**
  - Printing a Nozzle Check Pattern
- **For macOS:**
  - Printing a Nozzle Check Pattern

If the pattern is not printed correctly, check if the ink tank for the problem color is empty.

If the ink tank is not empty, go to the next step.

Step2 Clean the print head.

After cleaning the print head, print the nozzle check pattern and check the result.

- **For Windows:**
  - Clean the print head
- **For macOS:**
  - Clean the print head

If it does not improve, go to the next step.

Step3 Clean the print head again.

After cleaning the print head again, print the nozzle check pattern and check the result.

If it still does not improve, go to the next step.

Step4 Clean the print head deeply.

After cleaning the print head deeply, print the nozzle check pattern and check the result.

- **For Windows:**

  ➡ Clean the print head deeply

- **For macOS:**

  ➡ Clean the print head deeply

If it does not improve, turn off the printer for more than 24 hours without disconnecting the power plug, and go to the next step.

Step5 Clean the print head deeply again.

After cleaning the print head deeply again, print the nozzle check pattern and check the result.

If it still does not improve, go to the next step.

Step6 Request a repair.

If problem is not resolved after performing print head deep cleaning twice, the print head may be damaged. Contact your nearest Canon service center to request a repair.

For details on printing the nozzle check pattern, print head cleaning, and print head deep cleaning, see If Printing Is Faint or Uneven.

Q

Printer Does Not Pick up or Feed the Paper/"No Paper" Error

A

Check1 Make sure paper is loaded.

➡ Loading Paper

Check2 When loading paper, consider the following.

- When loading two or more sheets of paper, align the edges of the sheets before loading the paper.
- When loading two or more sheets of paper, make sure the paper stack does not exceed the paper load limit.

  However, paper may not feed correctly at the maximum capacity, depending on the type of paper or environmental conditions (very high or low temperature and humidity). In such cases, reduce the amount of paper you load at a time to less than half of the paper load limit.
- Always load the paper in portrait orientation, regardless of the printing orientation.
- When you load the paper on the rear tray, place the print side facing UP and align the right and left paper guides with the paper stack.

  ➡ Loading Paper
- In the cassette, be sure to load only plain paper.
- When you load the paper on the cassette, place the print side facing DOWN and align the right/left/front paper guides with the paper stack.

  ➡ Loading Paper

Check3 Is paper too thick or curled?

➡ Unsupported Media Types

Check4 When loading envelopes, consider the following.

When printing on envelopes, see Loading Envelopes in Rear Tray, and prepare the envelopes before printing.

Once you have prepared the envelopes, load them in portrait orientation. If the envelopes are placed in landscape orientation, they will not feed properly.

Check5 Make sure media type and paper size settings match with loaded paper.

Check6 Make sure that there are not any foreign objects in the rear tray.

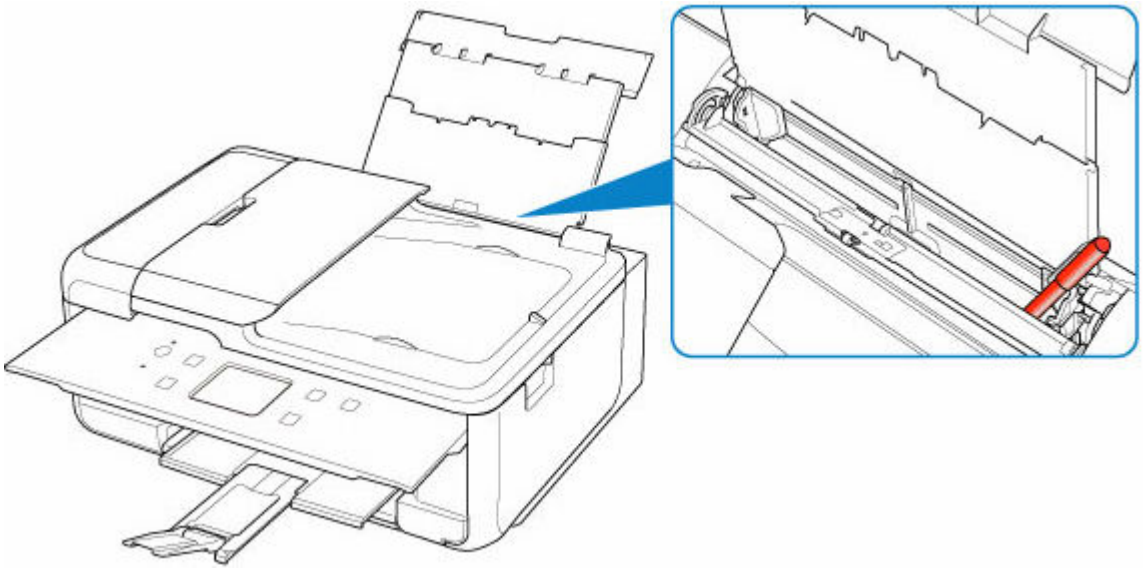

If the paper tears in the rear tray, see What to Do When Paper Is Jammed to remove it.

If there are any foreign objects in the rear tray, be sure to turn off the printer, unplug it from the power supply, then remove the foreign object.

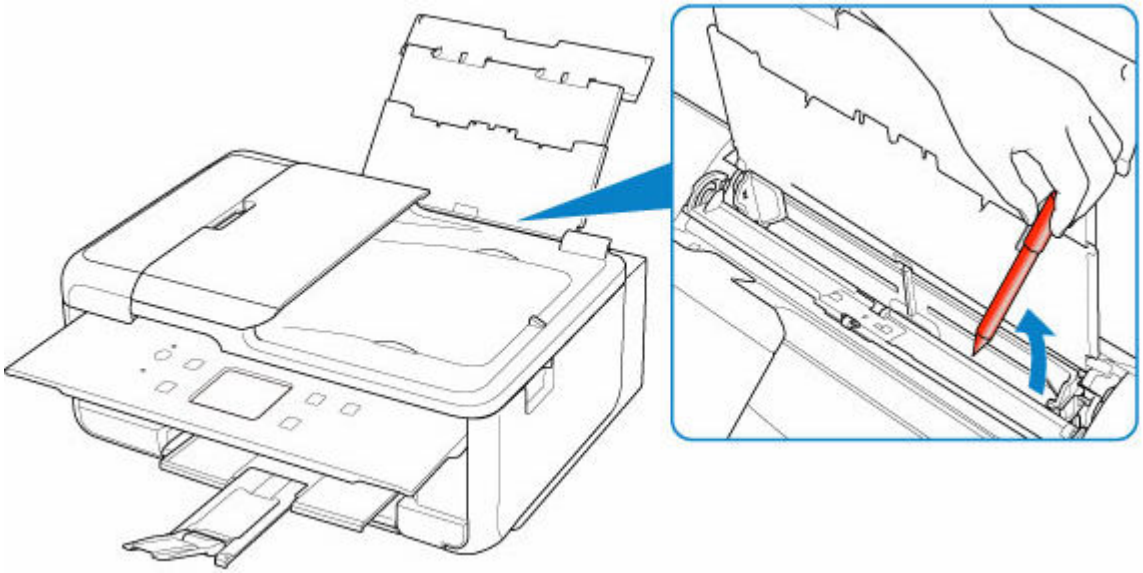

Note

- If the feed slot cover is opened, close it slowly.
- If the problem occurs immediately after removing the jammed paper from the rear side of the printer, see below.

  ➡ Removing Jammed Paper from Rear Side

Check7 Clean paper feed roller.

➡ Cleaning Paper Feed Rollers

Note

- Cleaning the paper feed roller abrades it, so do this only when necessary.

Check8 If two or more sheets of paper feed from cassette at once, clean inside of cassette.

➡ Cleaning Cassette Pads

Check9 Are transport unit cover and rear cover attached properly?

See Rear View for the positions of the transport unit cover and the rear cover.

If the measures above do not solve the problem, contact your nearest Canon service center to request a repair.

Printout Results Are Unsatisfactory

If the print results are unsatisfactory due to white streaks, misaligned/distorted lines, or uneven colors, check the paper and print quality settings first.

Check1 Do page size and media type settings match size and type of loaded paper?

If these settings do not match, it is not possible to obtain the proper result.

If you are printing a photograph or an illustration, an incorrect paper type setting may reduce the quality of the printout color.

Also, if you print with an incorrect paper type setting, the printed surface may be scratched.

In borderless printing, uneven coloring may occur depending on the combination of the paper type setting and the loaded paper.

The method for checking the paper and print quality settings differs depending on what you are using your printer for.

- **Copying/Printing**

  Check the settings using the operation panel.

  ➡ Setting Items for Copying

- **Printing from your computer**

  Check the settings using the printer driver.

  ➡ Basic Printing Setup

- **Printing from a PictBridge (Wi-Fi) compliant device**

  Check the settings on your PictBridge (Wi-Fi) compliant device or the operation panel.

  ➡ PictBridge (Wi-Fi) Print Settings
  ➡ PictBridge settings

- **Printing from your smartphone/tablet using Canon PRINT Inkjet/SELPHY**

  Check the settings on Canon PRINT Inkjet/SELPHY.

  ➡ Print Photos from Your Smartphone

Check2 Make sure appropriate print quality is selected (see list above).

Select a print quality suited to the paper and to what you are printing. If you notice blurs or uneven colors, increase the print quality setting and retry the printing.

Note

- When printing from a PictBridge (Wi-Fi) compliant device, set the print quality setting using the operation panel.

  This setting cannot be made on the PictBridge (Wi-Fi) compliant device.

Check3 If problem is not resolved, check also the sections below.

See also the sections below:

- Printouts Are Blank/Blurry or Fuzzy/Inaccurate or Bleeding Colors/Streaks or Lines
- Lines Are Misaligned/Distorted
- Paper Is Smudged / Printed Surface Is Scratched
- Vertical Line Next to Image
- Cannot Complete Printing
- Part of Page Is Not Printed (Windows)
- Lines Incomplete or Missing (Windows)
- Images Incomplete or Missing (Windows)
- Ink Blots / Paper Curl
- Back of Paper Is Smudged
- Uneven or Streaked Colors

Q

Printouts Are Blank/Blurry or Fuzzy/Inaccurate or Bleeding Colors/ Streaks or Lines

Printing Is Blurry

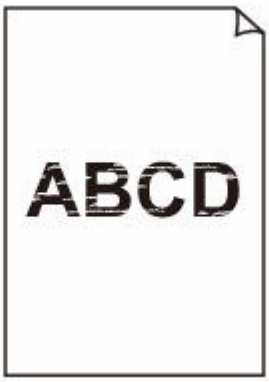

Colors Are Wrong

White Streaks Appear

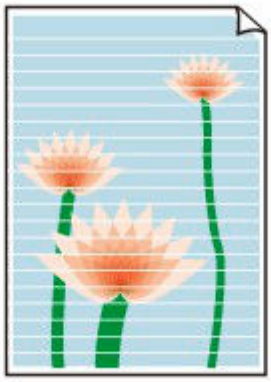

Check1 Check paper and print quality settings.

➡ Printout Results Are Unsatisfactory

Check2 Check status of ink tanks. Replace ink tank if ink has run out.

➡ Checking Ink Status on the Touch Screen
➡ Replacing Ink Tanks

Check3 Are the orange tape and plastic wrap still on the ink tank?

Make sure all the protective plastic wrap is peeled off to expose the Y-vent area, as shown below (A).

If the orange tape remains on the ink tank (B), peel it off.

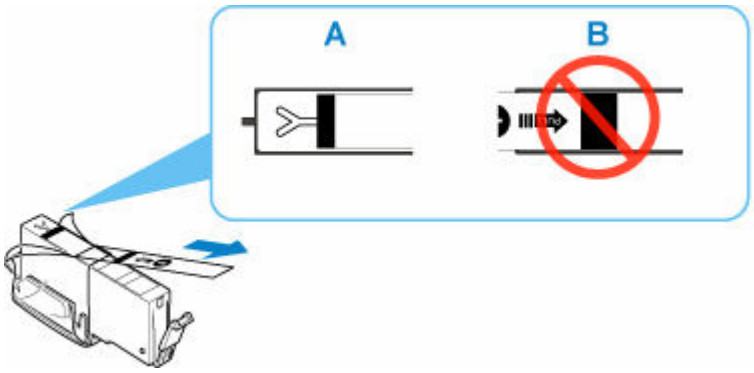

Check4 Are the print head nozzles clogged?

Print the nozzle check pattern to determine whether the ink ejects properly from the print head nozzles.

Step1 Print the nozzle check pattern.

After printing the nozzle check pattern, examine the pattern.

- **For Windows:**
  ➡ Printing a Nozzle Check Pattern
- **For macOS:**
  ➡ Printing a Nozzle Check Pattern

If the pattern is not printed correctly, check if the ink tank for the problem color is empty.

If the ink tank is not empty, go to the next step.

Step2 Clean the print head.

After cleaning the print head, print the nozzle check pattern and check the result.

- **For Windows:**
  - Clean the print head
- **For macOS:**
  - Clean the print head

If it does not improve, go to the next step.

Step3 Clean the print head again.

After cleaning the print head again, print the nozzle check pattern and check the result.

If it still does not improve, go to the next step.

Step4 Clean the print head deeply.

After cleaning the print head deeply, print the nozzle check pattern and check the result.

- **For Windows:**
  - Clean the print head deeply
- **For macOS:**
  - Clean the print head deeply

If it does not improve, turn off the printer for more than 24 hours without disconnecting the power plug, and go to the next step.

Step5 Clean the print head deeply again.

After cleaning the print head deeply again, print the nozzle check pattern and check the result.

If it still does not improve, go to the next step.

Step6 Request a repair.

If problem is not resolved after performing print head deep cleaning twice, the print head may be damaged. Contact your nearest Canon service center to request a repair.

For details on printing the nozzle check pattern, print head cleaning, and print head deep cleaning, see If Printing Is Faint or Uneven.

Check5 When using paper with one printable surface, check the correct printable side of the paper.

Printing on the wrong side of such paper may cause unclear prints or prints with reduced quality.

When you load paper on the rear tray, load paper with the printable side facing up. When you load paper in the cassette, load paper with the printable side facing down.

Refer to the instruction manual supplied with the paper for detailed information on the printable side.

- **When copying, see also the sections below:**

Check6 Is platen glass or glass of ADF dirty?

Clean the platen glass or the glass of ADF.

- Cleaning Platen and Document Cover
- Cleaning the ADF (Auto Document Feeder)

Note

- If the glass of ADF is dirty, black streaks appear on the paper as shown below.

Check7 Make sure original is properly loaded on platen or ADF.

When you load the original on the platen, load it with the side to be copied facing down.

When you load the original on the ADF, load it with the side to be copied facing up.

➡ Loading Originals

Check8 Is copy source a printed paper by printer?

If you use a printout done by this printer as the original, print quality may be reduced depending on the condition of the original.

Print from the printer directly, or reprint from the computer if you can reprint from it.

Q

Lines Are Misaligned/Distorted

A

Check1 Check paper and print quality settings.

➡ Printout Results Are Unsatisfactory

Check2 Perform print head alignment.

If printed lines are misaligned/distorted or print results are otherwise unsatisfactory, adjust the print head position.

➡ Aligning the Print Head

Note

- If the problem is not resolved after performing the print head alignment, perform print head alignment manually from your computer.
  - **For Windows:**
    - ➡ Adjusting Print Head Position Manually

Check3 Increase print quality and try printing again.

Increasing the print quality using the operation panel or the printer driver may improve the print result.

Q

Paper Is Smudged / Printed Surface Is Scratched

Paper Is Smudged

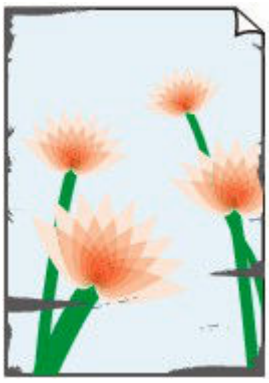

Smudged Edges

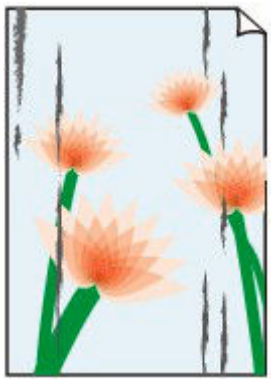

Smudged Surface

Printed Surface Is Scratched

A

Check1 Check paper and print quality settings.

➡ Printout Results Are Unsatisfactory

Check2 Check paper type.

Make sure you are using the right paper for what you are printing.

➡ Supported Media Types

Check3 Correct curl before loading paper.

When using Photo Paper Plus Semi-gloss, even if the sheet is curled, load one sheet at a time as it is. Rolling this paper in the opposite direction to flatten it may crack the paper surface and reduce the print quality.

We recommend putting unused paper back into the package and storing it flat.

- **Plain Paper**

  Turn the paper over and reload it to print on the other side.

- **Other Paper such as envelope**

  If the paper corners curl more than 0.1 in. / 3 mm (A) in height, the paper may smudge or may not feed properly. Follow the instructions below to correct the paper curl.

1. Roll up paper in opposite direction to paper curl as shown below.

2. Check that paper is now flat.

   We recommend printing curl-corrected paper one sheet at a time.

Note

- Depending on paper type, the paper may smudge or may not feed properly even if it is not curled inward. Follow the instructions below to curl the paper outward up to 0.1 in. / 3 mm (C) in height before printing. This may improve the print result.

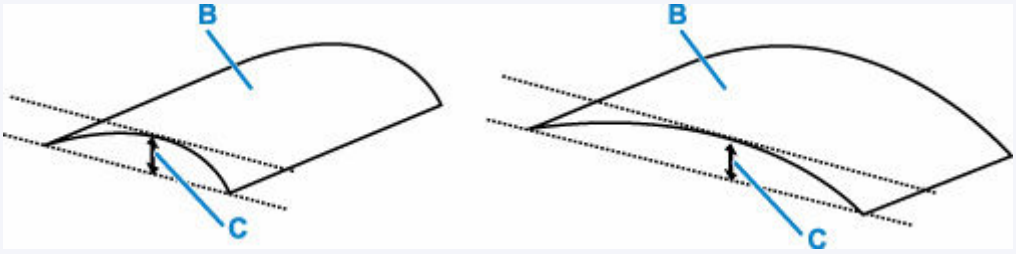

(B) Print side

We recommend feeding paper that has been curled outward one sheet at a time.

Check4 Set printer to prevent paper abrasion.

Adjusting the setting to prevent paper abrasion will widen the clearance between the print head and the paper. If you notice abrasion even with the media type set correctly to match the paper, set the printer to prevent paper abrasion using the operation panel or the computer.

This may reduce the print speed.

* Once you have finished printing, undo this setting. Otherwise, it will apply to subsequent print jobs.

- **From operation panel**

  Press the **HOME** button, select (**Setup**) icon, **Device settings**, and **Print settings**, and then set **Prevent paper abrasion** to **ON**.

  ➡ Changing Settings from Operation Panel

- **From computer (Windows):**

  1. Check that printer is turned on.
  2. Open Canon IJ Printer Assistant Tool.

     ➡ Opening the Maintenance Tool (Canon IJ Printer Assistant Tool)
  3. Select **Custom Settings**.
  4. Select **Prevents paper abrasion** check box and select **OK**.
  5. Check message and select **OK**.

- **From computer (macOS):**

  Adjust the setting to prevent paper abrasion from Remote UI.

  ➡ Opening Remote UI for Maintenance

Check5 If intensity is set high, reduce intensity setting and try printing again.

If you are printing with a high intensity setting on plain paper, the paper may absorb too much ink and become wavy, causing paper abrasion.

- Printing from your computer (Windows)

  Check the intensity setting in the printer driver.

  ➡ Adjusting intensity
- Copying

  ➡ Setting Items for Copying

Check6 Is platen glass dirty?

Clean the platen glass.

➡ Cleaning Platen and Document Cover

Check7 Is paper feed roller dirty?

Clean paper feed roller.

➡ Cleaning Paper Feed Rollers

Note

- Cleaning the paper feed roller abrades it, so do this only when necessary.

Check8 Is inside of printer dirty?

During duplex printing, ink may stain the inside of the printer, smudging the printout.

Perform bottom plate cleaning to clean inside of printer.

➡ Cleaning Inside the Printer (Bottom Plate Cleaning)

Note

- To prevent staining inside the printer, be sure to set the correct paper size.

Check9 Set longer ink drying time.

This allows the printed surface to dry, preventing smudges and scratches.

- **For Windows:**

  1. Check that printer is turned on.
  2. Open Canon IJ Printer Assistant Tool.

     ➡ Opening the Maintenance Tool (Canon IJ Printer Assistant Tool)
  3. Select **Custom Settings**.
  4. Drag **Ink Drying Wait Time** slide bar to set the wait time and select **OK**.
  5. Check message and select **OK**.

- **For macOS:**

  Set the waiting time using Remote UI.

  ➡ Opening Remote UI for Maintenance

Q

Vertical Line Next to Image

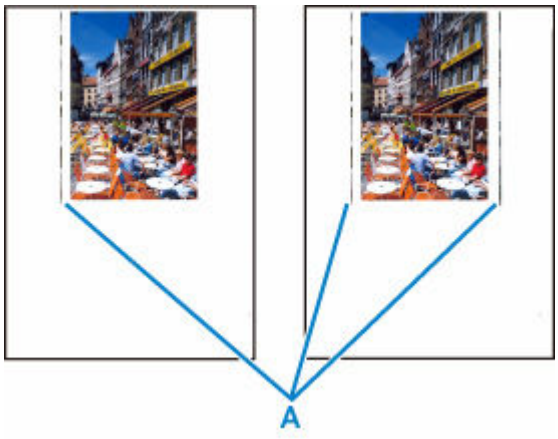

A

Check Is loaded paper size correct?

If the loaded paper is larger than the size you specified, vertical lines (A) may appear in the left margin or the both margin.

Set the paper size to match the loaded paper.

➡Printout Results Are Unsatisfactory

Note

- The direction or pattern of the vertical lines (A) may vary depending on the image data or the print setting.
- This printer performs automatic cleaning when necessary to keep printouts clean. A small amount of ink is ejected for cleaning.

  Although the ink is normally ejected onto the ink absorber at the outer edge of the paper, it may get onto the paper if the loaded paper is larger than the set size.

Scanning Problems (Windows)

➤ Scanning Problems

Scanning Problems

- Scanner Does Not Work
- ScanGear (Scanner Driver) Does Not Start

Scanner Does Not Work

Check 1 Make sure that your scanner or printer is turned on.

Check 2 Connect the USB cable to a different USB port on the computer.

Check 3 If the USB cable is connected to a USB hub, remove it from the USB hub and connect it to a USB port on the computer.

Check 4 With network connection, check the connection status and reconnect as needed.

Check 5 Restart the computer.

ScanGear (Scanner Driver) Does Not Start

Check 1 Make sure MP Drivers is installed.

If not installed, install MP Drivers from the Setup CD-ROM or our website.

Check 2 Select your scanner or printer on the application's menu.

Important

- If your scanner or printer name is displayed multiple times, select the one that does not include WIA.

Note

- The operation may differ depending on the application.
- Use the WIA driver when scanning from a WIA-compliant application.

  ➡ Scanning with WIA Driver

Check 3 Make sure that the application supports TWAIN.

You cannot start ScanGear (scanner driver) from applications not supporting TWAIN.

Check 4 Scan and save images with IJ Scan Utility and open the files in your application.

Scanning Problems (macOS)

➤ Scanning Problems

Scanning Problems

- Scanner Does Not Work
- Scanner Driver Does Not Start

Scanner Does Not Work

Check 1 Check that your scanner or printer is turned on.

Check 2 With network connection, check the connection status and reconnect as needed.

Check 3 With USB connection, connect the USB cable to a different USB port on the computer.

Check 4 If the USB cable is connected to a USB hub, remove it from the USB hub and connect it to a USB port on the computer.

Check 5 Restart the computer.

Check 6 To scan from the printer's operation panel with USB connection, click **Scan-from-Operation-Panel Settings** in the **Settings (General Settings)** dialog, and then check that the following checkboxes are selected.

- Your scanner or printer
- **Enables scanning from the operation panel**

Scanner Driver Does Not Start

Check 1 Make sure the application software supports AirPrint.

Check 2 Select your scanner or printer on the application's menu.

Note

- The operation may differ depending on the application.

Check 3 Scan and save images with IJ Scan Utility Lite and open the files in your application.

Check 4 Your scanner may be locked. (Personal scanners only)

If IJ Scan Utility Lite or the application is running, exit it. Slide the scanner lock switch to the release position ( ), then reconnect the USB cable.

Faxing Problems

- Problems Sending Faxes
- Problems Receiving Faxes
- Telephone Problems
- Poor Quality Fax Received

Problems Sending Faxes

- Cannot Send a Fax
- Errors Often Occur When Send a Fax

Cannot Send a Fax

If you cannot send a fax, check the following items.

Check1 Check that the telephone line is connected correctly according to the following items.

- Reconnect the telephone line cable to the telephone line jack (LINE), and plug the other end into the telephone wall jack or telephone jack.
  ➡ Connecting Telephone Line
- If "**Telephone line is busy.**" is displayed on the screen, the line is being used by the child phone. Please check back later.
- If you do not hear the normal telephone line sound (dial tone) from the printer when you touch the hook key, the telephone line connection may be incorrect or there may be a problem with the telephone line. Check that the connection method of the telephone line is correct, and contact your telephone company and the manufacturer of your terminal adapter.
- If "**Hook key is disabled.**" is displayed when you touch the hook key, select **FAX settings** > **Security control** > **Hook key setting** and then select **Enable**.
  ➡ Fax settings

Check2 Is telephone line type set correctly?

Check the telephone line type setting and change it as necessary.

➡ Setting Telephone Line Type

Check3 Is **Dial tone detect** set to **ON**?

Select **FAX settings** > **Advanced FAX settings** > **Dial tone detect** and then select **OFF**.

➡ Fax settings

Check4 Is fax/telephone number registered correctly in printer's directory?

Check the recipient's fax/telephone number, correct the fax/telephone number registered in the printer's directory, and then send the document again.

➡ Changing Registered Information

Check5 Is printer's memory full?

Delete contents in memory, and then send a fax again.

➡ Document Stored in Printer's Memory

Check6 Is document loaded properly?

Remove the document, and then reload it on the platen or in the ADF.

➡ Loading Originals

Check7 Does a printer error occur?

Ensure that an error message is displayed on the touch screen. When an error message is displayed on the touch screen, check the cause.

For messages, refer to Message (Support Code) Appears.

Press the **Stop** button and if the message is closed, you can send the fax.

Errors Often Occur When Send a Fax

Check Check telephone line condition or connection.

If errors occur frequently when using an Internet telephone, it is possible that they can be reduced by selecting **Reduce** for **Error reduction setting (VoIP)** on **Advanced FAX settings** under **FAX settings**.

For details, see **Error reduction setting (VoIP)**.

➡ FAX settings

Note

- If selecting **Reduce** does not reduce errors, select **Do not reduce**.

In addition, when using an Internet telephone, it is possible that errors occur more often if **4800 bps** or **9600 bps** is selected for **TX start speed**. Select **14400 bps** or **33600 bps**.

If the telephone line or connection is poor when using a general telephone, reducing the transmission start speed may correct the error.

Reduce the transmission start speed on **TX start speed** in **Adv. communication settings** in **Advanced FAX settings** under **FAX settings**.

➡ Fax settings

Problems Receiving Faxes

- **Cannot Print a Fax/"Fax received. Saved in memory." Appears**

Cannot Print a Fax/"Fax received. Saved in memory." Appears

Check1 Make sure there is enough ink left to print.

- If there is not enough ink left to print, received faxes will be stored in the printer's memory without being printed (Memory Reception). Printing starts automatically after replacing the ink tank.

  ➡ Document Stored in Printer's Memory

- You can also set to print received faxes even when the ink level is low.

  Select **FAX settings** > **Auto print settings** > **Print when out of ink** and then select **Print**.

  However, if you run out of ink while printing a fax with this setting, the fax content will be output as a blank page from the middle, and the fax content will be erased from the printer's memory as printed.

Check2 Check the operation panel is open.

If the operation panel is closed, received faxes will be stored in the printer's memory without being printed (Memory Reception). Open the operation panel, and then select **OK**.

Check3 Is a different size of paper from that specified by **Page size** in **Fax paper settings** loaded?

If a different size of paper from that specified by **Page size** is loaded for printing faxes, the received faxes will not be printed and will be stored in the printer's memory (Memory Reception). Load the same size of paper as that specified by **Page size**, then select **OK**.

Check4 Is paper loaded?

If paper is not loaded, received faxes will be stored in the printer's memory without being printed (Memory Reception). Select **FAX**, Load paper, and then select **OK**.

Telephone Problems

- Cannot Dial
- Telephone Disconnects During a Call

Cannot Dial

Check1 Is telephone line cable connected correctly?

Check that the telephone line cable is connected correctly.

➡ Connecting Telephone Line

Check2 Is telephone line type of printer or external device set correctly?

Check the telephone line type setting and change it as necessary.

➡ Setting Telephone Line Type

Telephone Disconnects During a Call

Check Is telephone line cable or telephone (or a peripheral device such as an external telephone, an answering device, or a computer modem) connected correctly?

Check that the telephone line cable and the telephone (or a peripheral device such as an external telephone, an answering device, or a computer modem) are connected correctly.

➡ Connecting Telephone Line

Poor Quality Fax Received

Check1 Check scan settings of sender's fax device.

Ask the sender to adjust the scan settings of the fax device.

Check2 Is **ECM RX** set to **OFF**?

Select **ON** for **ECM RX** in **Adv. communication settings** in **Advanced FAX settings** under **FAX settings**.

If **ECM RX** is enabled, the sender's fax device resends the fax after correcting errors automatically.

➡ Fax settings

Check3 Is sender's original document or scanning area of sender's fax device dirty?

The image quality of the fax is mainly determined by the sender's fax device. Contact the sender and ask the sender to check whether the scanning area of the fax device is dirty.

Check4 Is ECM transmission/reception enabled although the line/connection is poor, or is the sender's fax device compatible with ECM?

- Select **ON** for **ECM RX** in **Adv. communication settings** in **Advanced FAX settings** under **FAX settings**.

  ➡ Fax settings

- Contact the sender and ask the sender to check whether the fax device is set to enable ECM transmission.

  If the sender's or recipient's fax device is not compatible with ECM, the fax will be sent/received without automatic error correction.

- Reduce the reception start speed on **RX start speed** in **Adv. communication settings** in **Advanced FAX settings** under **FAX settings**.

  ➡ Fax settings

Check5 Did you confirm paper and print quality settings?

➡ Printout Results Are Unsatisfactory

Mechanical Problems

- Printer Does Not Turn On
- Printer Turns Off Unexpectedly or Repeatedly
- USB Connection Problems
- Cannot Communicate with Printer via USB
- Wrong Language Appears in Touch Screen

Printer Does Not Turn On

Check1 Press **ON** button.

➡ Power Supply

Check2 Make sure power plug is securely connected to printer, and then turn on again.

Check3 Unplug printer, leave it for at least 2 minutes, and then plug it back in and turn on again.

If this does not solve the problem, contact your nearest Canon service center to request a repair.

Printer Turns Off Unexpectedly or Repeatedly

Check If printer is set to turn off automatically after a certain time, disable this setting.

If you have set the printer to turn off automatically after a specified time, the power will shut off by itself once that time has elapsed.

- **To disable the setting from the operation panel:**

  1. Check that printer is turned on.
  2. Select (**Setup**) on Home screen.
  3. Select **ECO**.
  4. Select **Energy saving settings**.
  5. Check displayed message and select **Next**.
  6. Select **Auto power off**.
  7. Select **Never**.
  8. Select **OK**.

     The setting is disabled.

- **To disable the setting from the computer:**

  For Windows, use Canon IJ Printer Assistant Tool or ScanGear (scanner driver) to disable the setting.

  Follow the procedure below to disable the setting using Canon IJ Printer Assistant Tool.

  1. Open Canon IJ Printer Assistant Tool.

     ➡ Opening the Maintenance Tool (Canon IJ Printer Assistant Tool)
  2. Select **Auto Power Settings**.
  3. Select **Disable** for **Auto Power Off**.

4. Select **OK**.

5. Select **OK** on the displayed screen.

   The setting to shut off the power automatically is disabled.

Note

- Refer to below to disable the setting from ScanGear (scanner driver).

  ➡ Scanner Tab

USB Connection Problems

Make sure of the checking item below when you find one of the followings.

- Printing or scanning is slow.
- Hi-Speed USB connection does not work.
- A message such as "**This device can perform faster**" appears. (Windows)

Note

- If your system environment does not support Hi-Speed USB, the printer operates at the slower speed of Full-Speed or Low-Speed. In this case, the printer works properly but printing or scanning speed may slow down due to the communication speed.

Check Check following to make sure your system environment supports Hi-Speed USB connection.

- Does the USB port on your computer support Hi-Speed USB connection?
- Does the USB cable or the USB hub support Hi-Speed USB connection?

  Be sure to use a certified Hi-Speed USB cable. We recommend that the USB cable be no longer than 10 feet / 3 meters or so.
- Is the Hi-Speed USB driver working properly on your computer?

  Make sure the latest Hi-Speed USB driver is working properly and obtain and install the latest version of the Hi-Speed USB driver for your computer, if necessary.

Important

- For more information, contact the manufacturer of your computer, USB cable, or USB hub.

Cannot Communicate with Printer via USB

Check1 Make sure printer is turned on.

Check2 Connect USB cable properly.

As the illustration below, the USB port is at the back of the printer.

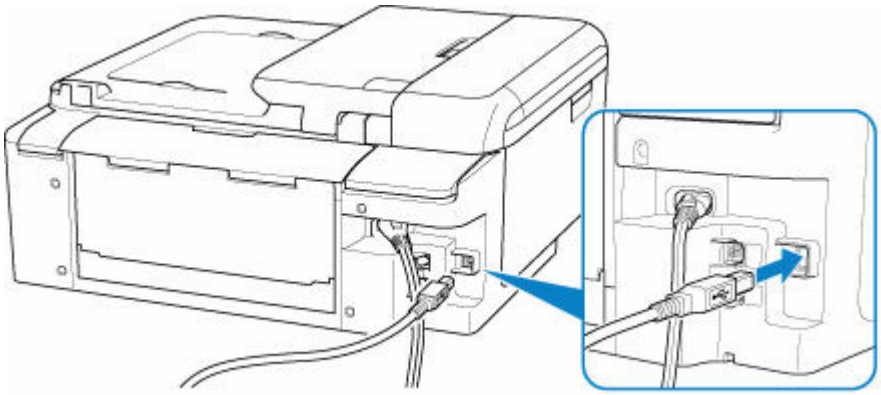

Important

- Check the orientation of the "Type-B" connector and connect to the printer. For details, refer to the instruction manual supplied with the USB cable.

Check3 Make sure **Enable bidirectional support** is selected in the **Ports** sheet of the **Printer properties** dialog box. (Windows)

If not, select it to enable bidirectional support.

➡ Opening Printer Driver's Setup Screen

Wrong Language Appears in Touch Screen

Follow the instructions below to select your language.

1. Press the **HOME** button and wait a little.
2. Select (**Setup**).

   ➡ Using Touch Screen
3. Select .
4. Select eighth setting item from top.
5. Select a language for touch screen.
6. Select button on lower left.

Installation and Download Problems

- Failed to MP Drivers Installation (Windows)
- Updating MP Drivers in Network Environment (Windows)

Failed to MP Drivers Installation (Windows)

If the MP Drivers were not installed correctly, make sure that all **Windows Updates** have been applied. If all **Windows Updates** have not been applied, apply all **Windows Updates**.

After confirming **Windows Update**, perform the following operations to install the MP Drivers.

1. Open screen to uninstall MP Drivers.

   For Windows 10:

   Select **Settings** > **Apps**.

   For Windows 8.1 / Windows 7:

   Select **Control Panel** > **Programs and Features**.

2. Check if there is "**Canon XXX series MP Drivers**" you want to install in list.

   "XXX" is the model name.

3. If you find MP Drivers for printer you want to install, uninstall it.

   If not found, proceed to the next step.

4. Restart computer.

   After restarting, install the latest MP Drivers.

Updating MP Drivers in Network Environment (Windows)

Download the latest MP Drivers in advance.

Download the latest MP Drivers for your model on the download page of the Canon website.

After the download is completed, overwrite and install the new version of the MP Drivers according to the specified installation procedure.

Note

- The network settings on the printer are not affected, so the printer can be used on the network without redoing settings.

Errors and Messages

- When Error Occurred
- Message (Support Code) Appears

When Error Occurred

If an error occurs in printing, for example, if the paper runs out or jams, a troubleshooting message appears automatically. For some errors, a support code (error number) is also displayed.

Take the appropriate action described in the message.

When a Support Code and a Message are displayed on the Computer Screen (Windows):

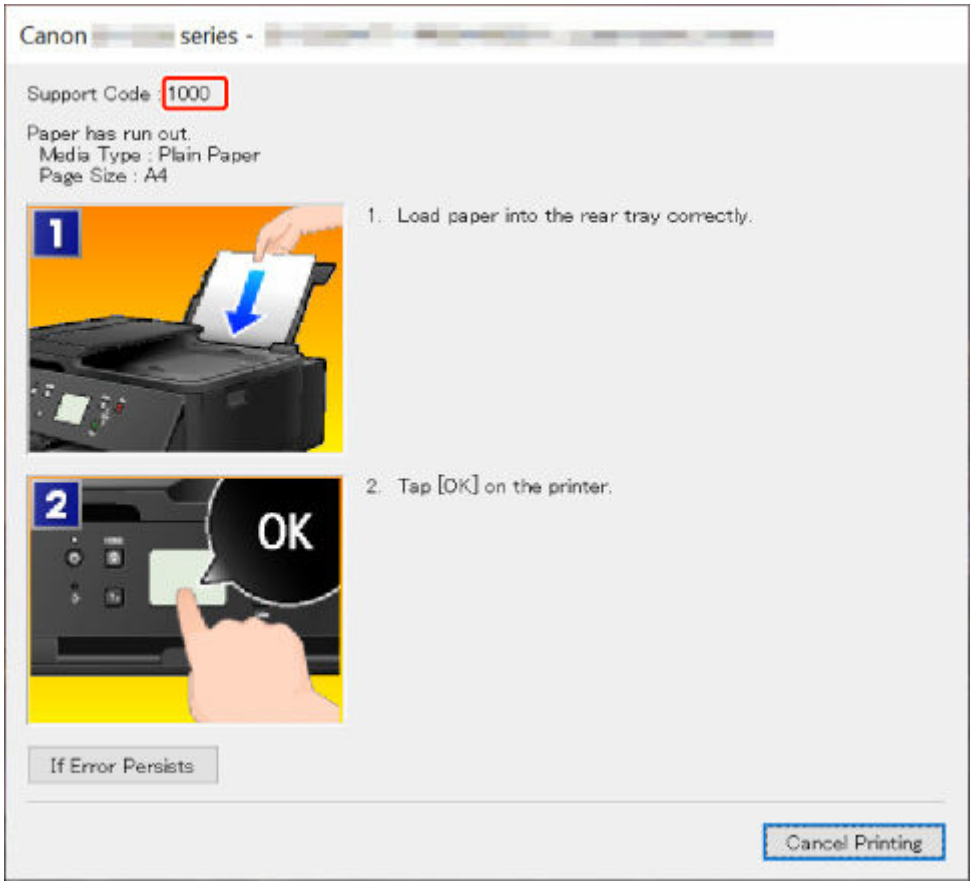

When a Support Code and a Message are displayed on the Printer's Touch Screen:

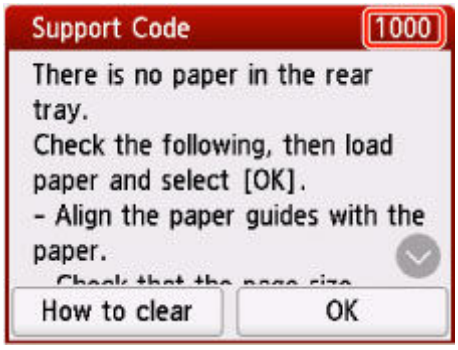

For details on how to resolve errors with Support Codes, see List of Support Code for Error.

For details on how to resolve errors without Support Codes, see Message (Support Code) Appears.

Message (Support Code) Appears

This section describes some of the messages that may appear.

Note

- A support code (error number) is displayed for some errors. For details on errors that have support code, see List of Support Code for Error.

If a message appears on the printer's touch screen, see below.

➡ Message Appears on the Printer's Touch Screen

If a message appears on the computer, see below.

➡ Error Regarding Automatic Duplex Printing Is Displayed
➡ Error Regarding Power Cord Being Unplugged Is Displayed (Windows)
➡ Writing Error/Output Error/Communication Error (Windows)
➡ Other Error Messages (Windows)

Message Appears on the Printer's Touch Screen

Check the message and take the appropriate action.

- **Power was not turned off correctly the last time. Press the button when turning power off.**

  The printer may have been unplugged while the power was still on.

  Select **OK** on the printer's touch screen to cancel the error.

  See Unplugging the Printer to unplug the printer correctly.

- **Cannot connect to the server. Please wait a while and try again.**

  The printer cannot connect to the server due to a communication error.

  Select **OK** on the printer's touch screen to cancel the error and try again after a while.

- **Check the page size and tap [OK].**

  The size of the loaded paper is different from the paper size set in **Page size** in **Fax paper settings**.

  Select **OK** on the printer's touch screen to cancel the error.

  Select **Function list** in **FAX**, check **Page size**, **Type** and **Paper src** in **Fax paper settings**, and then reload the paper accordingly.

- **Unsent/received document data has been lost because the power cord was unplugged.**

  A power failure has occurred or the power cord has been unplugged when the faxes are stored in the printer's memory.

  Select **OK** on the printer's touch screen to cancel the error.

  The list of the faxes deleted from the printer's memory (MEMORY CLEAR REPORT) will be printed. For details, refer to Summary of Reports and Lists.

  See Unplugging the Printer to unplug the printer correctly.

Important

- If a power failure occurs or you unplug the power cord, all the faxes stored in the printer's memory are deleted.

- **Replace the receiver.**

  The handset is not placed in the handset cradle correctly.

  Replace the handset correctly.

Note

- See A Message for Faxing Is Displayed on Fax Standby Screen for the message displayed on the fax standby screen.

Error Regarding Automatic Duplex Printing Is Displayed

Check See Automatic Duplex Printing Problems and take the appropriate action.

Error Regarding Power Cord Being Unplugged Is Displayed (Windows)

The printer may have been unplugged while it was on.

Check the error message that appears on the computer and click **OK**.

The printer starts printing.

See Unplugging the Printer to unplug the printer correctly.

Important

- If you unplug the power cord, all the faxes stored in the printer's memory are deleted.

Writing Error/Output Error/Communication Error (Windows)

Check1 If the **ON** lamp is off, make sure printer is plugged in and turn on.

The **ON** lamp flashes while the printer is initializing. Wait until the **ON** lamp stops flashing and remains lit.

Check2 Make sure printer is properly connected to computer.

If you are using a USB cable, make sure it is securely connected to both the printer and the computer. When the USB cable is securely plugged in, check the following:

- If you are using a relay device such as a USB hub, disconnect it, connect the printer directly to the computer, and retry the printing. If printing starts normally, there is a problem with the relay device. Contact the vendor of the relay device.
- There could also be a problem with the USB cable. Replace the USB cable and retry the printing.

If you use the printer over a LAN, make sure the printer is correctly set up for network use.

Check3 Make sure MP Drivers are installed correctly.

Uninstall the MP Drivers following the procedure described in Deleting the Unnecessary MP Drivers and click here to reinstall them.

Check4 When printer is connected to your computer with a USB cable, check device status from your computer.

Follow the procedure below to check the device status.

1. Select **Control Panel** > **Hardware and Sound** > **Device Manager**.

   Note

   - If the **User Account Control** screen appears, select **Continue**.

2. Open **USB Printing Support Properties**.

   Double-click **Universal Serial Bus controllers** and **USB Printing Support**.

   Note

   - If the **USB Printing Support Properties** screen does not appear, make sure the printer is correctly connected to the computer.

     ➡ Check2 Make sure printer is properly connected to computer.

3. Click **General** tab and check for a device problem.

   If a device error is shown, see Windows Help to resolve it.

Other Error Messages (Windows)

Check If an error message appears outside printer status monitor, check the following:

- **"Could not spool successfully due to insufficient disk space"**

  Delete any unnecessary files to increase the amount of free space on the disk.

- **"Could not spool successfully due to insufficient memory"**

  Close other applications to increase the available memory.

  If you still cannot print, restart your computer and retry the printing.

- **"Printer driver could not be found"**

  Uninstall the MP Drivers following the procedure described in Deleting the Unnecessary MP Drivers and click here to reinstall them.

- **"Could not print Application name** - File name"

  Try printing again once the current job is complete.

List of Support Code for Error

Support code appears on the printer's touch screen and your computer screen when errors occur.

A "support code" is an error number, and appears along with an error message.

When an error occurs, check the support code and take the appropriate action in response.

Support Code Appears on Printer's Touch Screen and Computer Screen

- **1000 to 1ZZZ**

  1000 1003 1200 1240 1300 1303

  1304 1309 1310 1313 1401 1403

  1405 140B 1410 1411 1412 1413

  1414 15A1 15A2 1600 1660 1684

  1688 1689 168C 1700 1701 1730

  1731 1871 1890

- **2000 to 2ZZZ**

  2110 2113 2114 2120 2123 2504

  2700 2801 2802 2803 2900 2901

- **3000 to 3ZZZ**

  3402 3403 3404 3405 3406 3407

  3408 340A 340B 340C 340D 340E

  3410 3411 3412 3413 3438 3439

  3440 3441 3442 3443 3444 3445

  3446 3447

- **4000 to 4ZZZ**

  4100 4103 4104 495A

- **5000 to 5ZZZ**

  5011 5012 5040 5050 5100 5200

  520E 5400 5700 5B00 5B01 5C02

- **6000 to 6ZZZ**

  6000 6001 6004 6500 6502 6800

  6801 6830 6831 6832 6833 6900

  6901 6902 6910 6930 6931 6932

  6933 6936 6937 6938 6939 693A

  6940 6941 6942 6943 6944 6945

  6946 6951 6A80 6A81 6D01

- **7000 to 7ZZZ**

  7500 7600 7700 7800

- **8000 to 8ZZZ**

  8300

- **9000 to 9ZZZ**

  9500

- **A000 to ZZZZ**

  C000

Note

- For information on how to deal with paper jams, see What to Do When Paper Is Jammed.

What to Do When Paper Is Jammed

If paper jams, remove it following the appropriate procedure as shown below.

- If you can see the jammed paper at the paper output slot or the rear tray:
  - ➡ 1300
- If you cannot see the jammed paper at the paper output slot or the rear tray:
  - If the paper fed from the cassette is jammed:
    - ➡ 1303
  - If the paper is jammed when performing automatic duplex printing:
    - ➡ 1304
  - If the paper is jammed as the printer pulled in the printed paper:
    - ➡ 1313
  - If the paper tears and you cannot remove it from the paper output slot or if the paper is jammed inside the printer:
    - ➡ Paper Is Jammed inside Printer
- If the document is jammed in the ADF (Auto Document Feeder):
  - ➡ 2801
- Cases other than above:
  - ➡ Other Cases

1300

Cause

Paper is jammed when feeding paper from rear tray.

What to Do

Remove the jammed paper following the instructions below.

Important

- The printer cannot be turned off while it is sending or receiving a fax, or when the received fax or the unsent fax is stored in the printer's memory.

  Turn off the printer after making sure it has completed sending or receiving all the faxes. Do not unplug when turning off the printer.

  If you unplug the power cord, all the faxes stored in the printer's memory are deleted.

1. Slowly pull out paper, either from paper output slot or from rear tray, whichever is easier.

   Hold the paper with both hands, and pull it out slowly so as not to tear it.

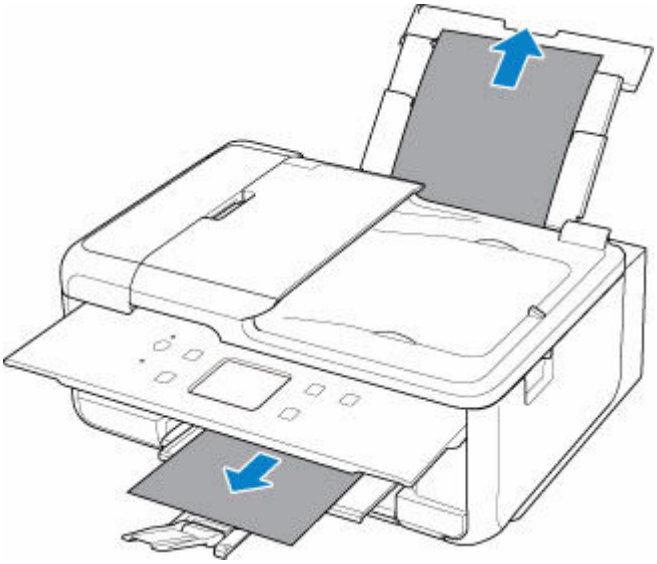

Note

- If you cannot pull out the paper, turn the printer back on without pulling forcibly. The paper may be ejected automatically.
- If paper becomes jammed during printing and you need to turn off the printer to remove it, press the printer's **Stop** button to stop the printing before you turn off the printer.
- If the paper tears and you cannot remove the jammed paper from the paper output slot or the rear tray, remove the paper from inside the printer.

  ➡ Paper Is Jammed inside Printer

  If you cannot remove the paper from inside the printer, try to pull the paper out from the rear side of the printer.

➡ Removing Jammed Paper from Rear Side

2. Reload paper and select **OK** on printer's touch screen.

   The printer resumes printing. Reprint the page you were printing if it was not printed properly due to the paper jam.

   If you turned off the printer in step 1, all jobs in the print queue are canceled. Redo the printing.

   Note

   - When reloading the paper, make sure you are using suitable paper and loading it correctly.
   - We recommend using paper sizes other than A5 to print documents with photos or graphics. A5 paper may curl and jam as it leaves the printer.

If the measures above do not solve the problem, contact your nearest Canon service center to request a repair.

1303

Cause

Paper is jammed when feeding paper from cassette.

What to Do

1. Remove jammed paper.
   - If the paper is jammed at the paper output slot:
     ➡ 1300
   - If the paper is jammed inside the printer:
     ➡ Paper Is Jammed inside Printer
   - If the paper is jammed at the feed slot of the cassette:

     Pull out the cassette, and then remove the jammed paper slowly with both hands.

     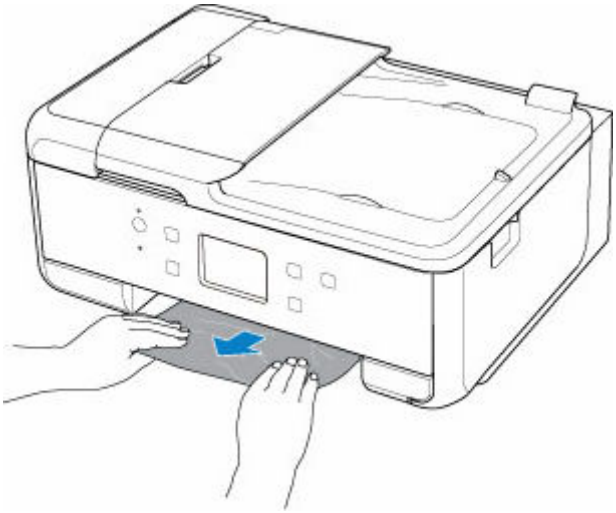
   - If the measures above do not solve the problem:
     ➡ Removing Jammed Paper from Rear Side
2. Load paper in cassette properly.

   When you load A4 sized paper in the cassette, make sure you have extended it.

   1. Remove cassette cover (A).

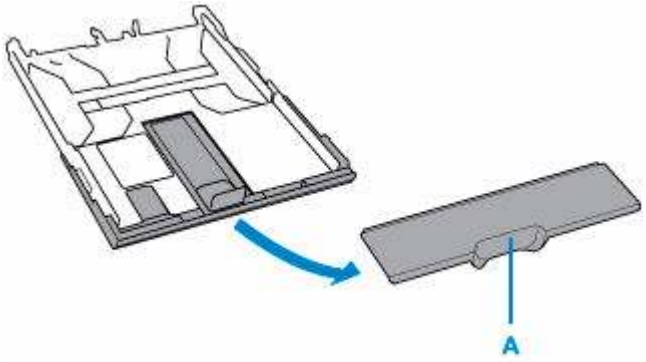

2. Press down lock (B) on cassette.

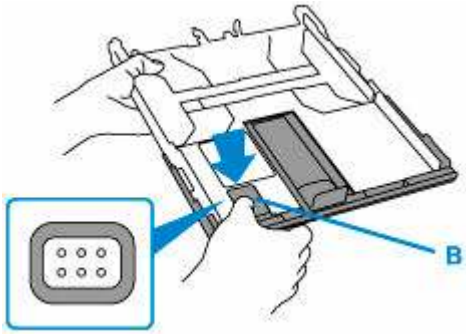

3. Pull cassette back and forth while holding down lock (B).

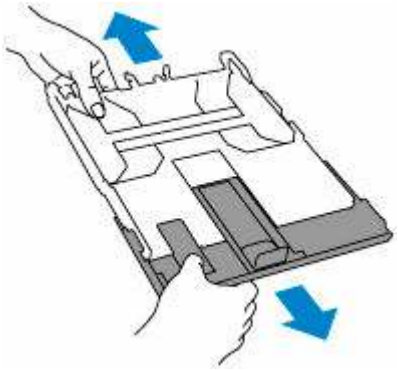

➡ Loading Plain Paper in Cassette

3. Select **OK** on printer's touch screen.

   The printer resumes printing. Reprint the page you were printing if it was not printed properly due to the paper jam.

If the measures above do not solve the problem, contact your nearest Canon service center to request a repair.

Important

- If you unplug the power cord, all the faxes stored in the printer's memory are deleted.

1304

Cause

Paper is jammed when performing automatic duplex printing.

What to Do

1. Remove jammed paper.

   - If the paper is jammed at the paper output slot:

     ➡ 1300

   - If the paper is jammed inside the printer:

     ➡ Paper Is Jammed inside Printer

   - If the paper is jammed at the feed slot of the cassette:

     Pull out the cassette, and then remove the jammed paper slowly with both hands.

     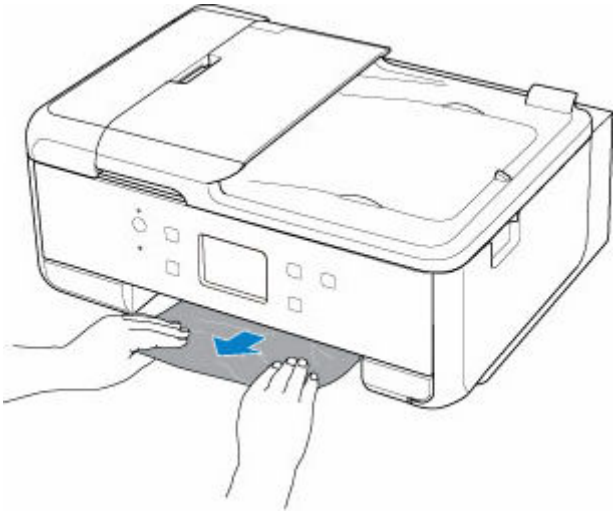

   - If the measures above do not solve the problem:

     ➡ Removing Jammed Paper from Rear Side

2. Load paper properly.

   ➡ Loading Plain Paper / Photo Paper in Rear Tray
   ➡ Loading Plain Paper in Cassette

   When you load A4 sized paper in the cassette, make sure you have extended it.

   1. Remove cassette cover (A).

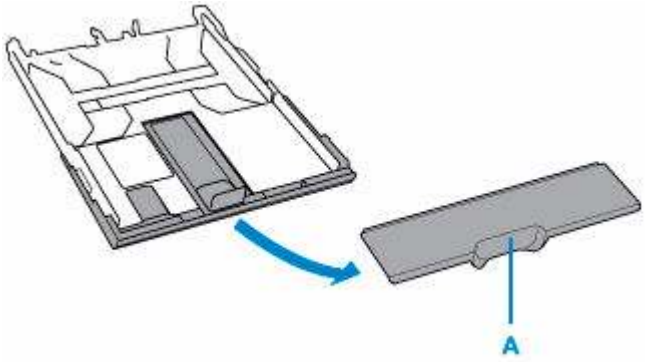

2. Press down lock (B) on cassette.

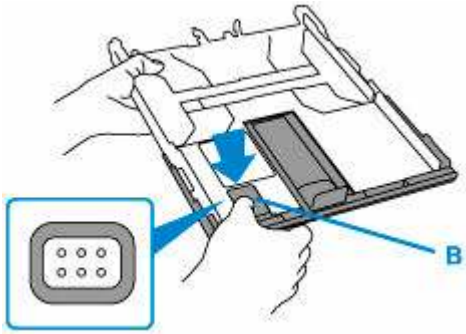

3. Pull cassette back and forth while holding down lock (B).

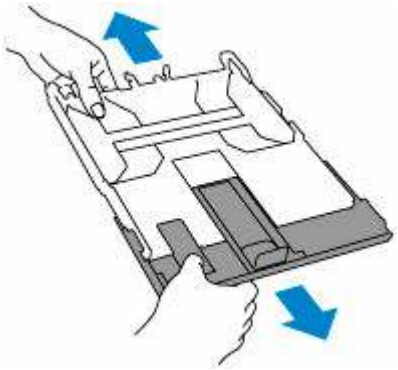

3. Select **OK** on printer's touch screen.

   The printer resumes printing. Reprint the page you were printing if it was not printed properly due to the paper jam.

If the measures above do not solve the problem, contact your nearest Canon service center to request a repair.

Important

- If you unplug the power cord, all the faxes stored in the printer's memory are deleted.

1313

Cause

Paper is jammed as printer pulled in printed paper.

What to Do

Depending on where the paper is jammed, decide on the countermeasure.

- If the paper is jammed at the paper output slot:

  ➡ 1300

- If the paper is jammed inside the printer:

  ➡ Paper Is Jammed inside Printer

- If the measures above do not solve the problem:

  ➡ Removing Jammed Paper from Rear Side

Important

- If you unplug the power cord, all the faxes stored in the printer's memory are deleted.

Paper Is Jammed inside Printer

If the jammed paper tears and you cannot remove the paper either from the paper output slot or the feed slot, or if the jammed paper remains inside the printer, remove the paper following the instructions below.

Important

- The printer cannot be turned off while it is sending or receiving a fax, or when the received fax or the unsent fax is stored in the printer's memory.

  Turn off the printer after making sure it has completed sending or receiving all the faxes. Do not unplug when turning off the printer.

  If you unplug the power cord, all the faxes stored in the printer's memory are deleted.

Note

- If paper becomes jammed during printing and you need to turn off the printer to remove it, press the printer's **Stop** button to stop the printing before you turn off the printer.

1. Turn off printer and unplug it.

2. Open scanning unit / cover.

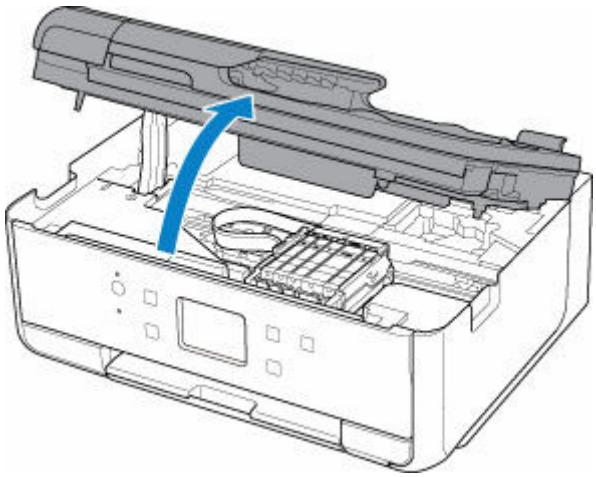

Important

- Do not touch white belt (A).

If you soil or scratch this part by touching it with paper or your hand, it could damage the printer.

3. Check if jammed paper is under print head holder.

If the jammed paper is under the print head holder, move the print head holder to the far right or left, whichever makes it easier to remove the paper.

When moving the print head holder, hold the top of the print head holder and slide it slowly to the far right or left.

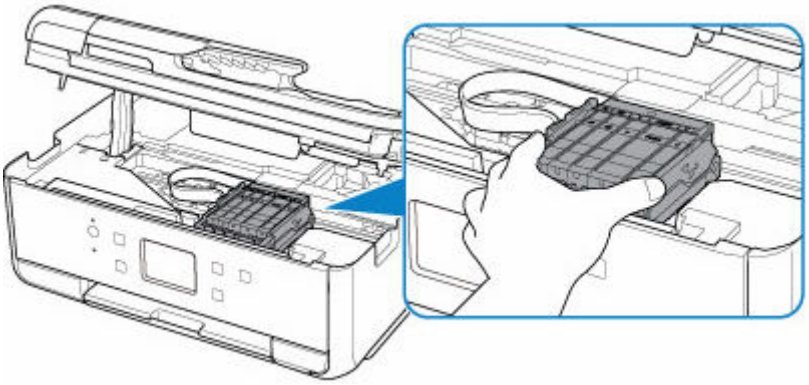

4. Hold jammed paper firmly in both hands.

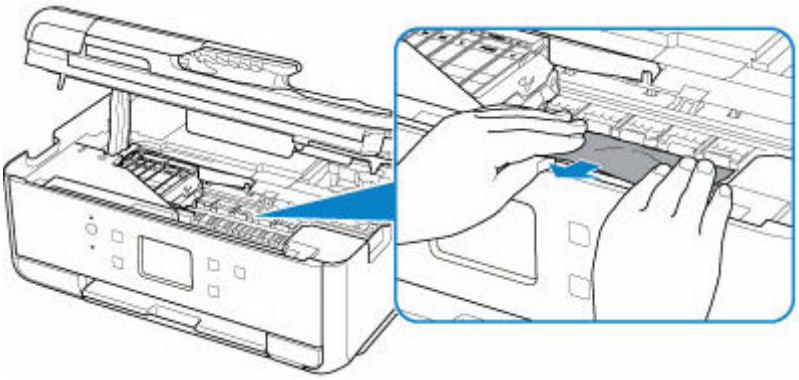

If the paper is rolled up, pull out it.

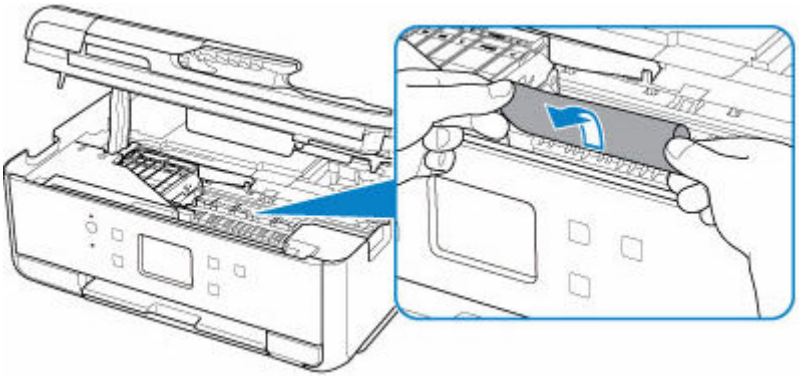

5. Slowly pull out paper, so as not to tear it.

Pull out the paper at an angle of about 45 degrees.

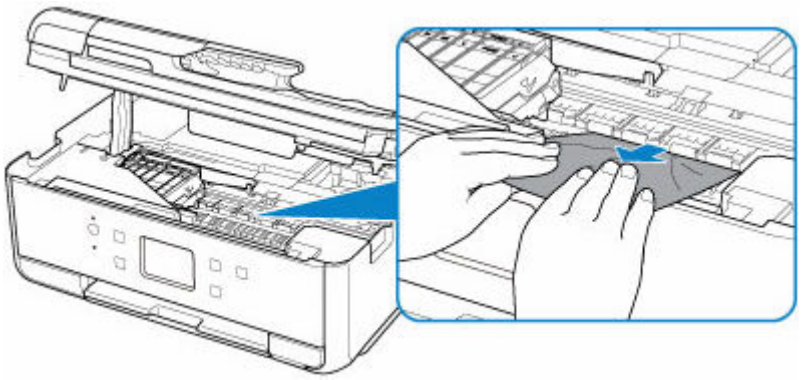

6. Make sure all jammed paper is removed.

   If the paper tears when you pull out it, a bit of paper may remain in the printer. Check the following and remove any remaining paper.

   - Any paper left under the print head holder?
   - Any small bits of paper left in the printer?
   - Any paper left in the left and right empty spaces (B) in the printer?

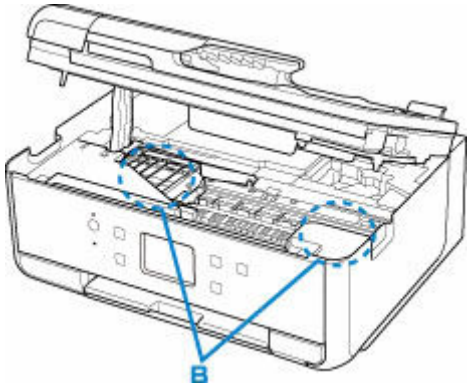

7. Close scanning unit / cover gently.

8. Plug in the printer again and turn it back on.

   All jobs in the print queue are canceled. Redo the printing.

   Note

   - When reloading the paper, make sure you are using suitable paper and loading it correctly.

     If a paper jam message appears on the printer's touch screen or on your computer screen when you resume printing after removing all the jammed paper, there may be some paper still inside the printer. Check the printer again for any remaining bits of paper.

If the measures above do not solve the problem, contact your nearest Canon service center to request a repair.

Removing Jammed Paper from Rear Side

Important

- The printer cannot be turned off while it is sending or receiving a fax, or when the received fax or the unsent fax is stored in the printer's memory.

  Turn off the printer after making sure it has completed sending or receiving all the faxes. Do not unplug when turning off the printer.

  If you unplug the power cord, all the faxes stored in the printer's memory are deleted.

Note

- If paper becomes jammed during printing and you need to turn off the printer to remove it, press the printer's **Stop** button to stop the printing before you turn off the printer.

1. Make sure you have unplugged the power cord.

2. Rotate printer so that rear side of printer faces toward you.

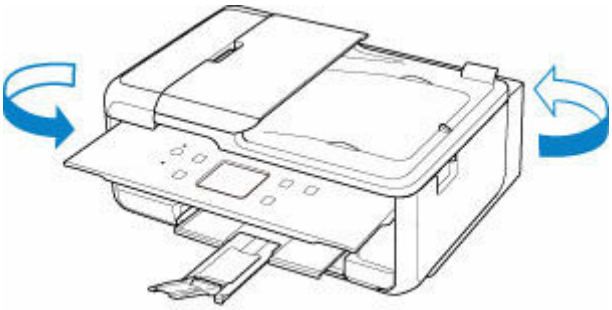

3. Open rear tray cover and then pull up paper support.

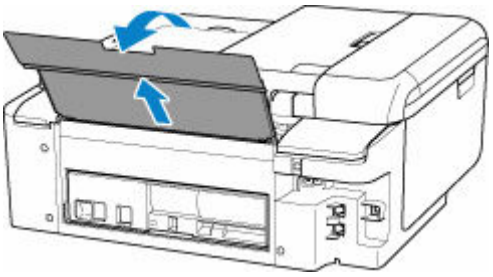

4. Detach rear cover.

   Pull out the rear cover.

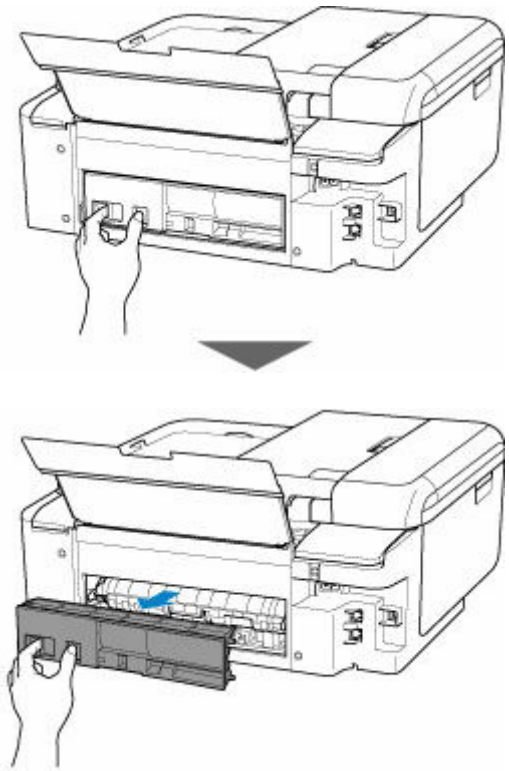

5. Slowly pull out paper.

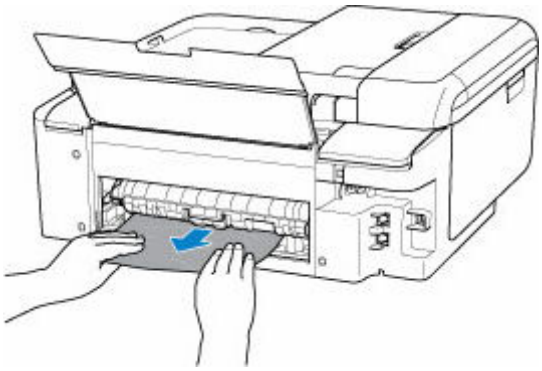

Note

- Do not touch the inner parts of the printer.

If you were not able to remove the paper in this step, detach the transport unit cover and remove the paper by following these steps.

1. Detach transport unit cover.

   Lift up the transport unit cover and pull out it.

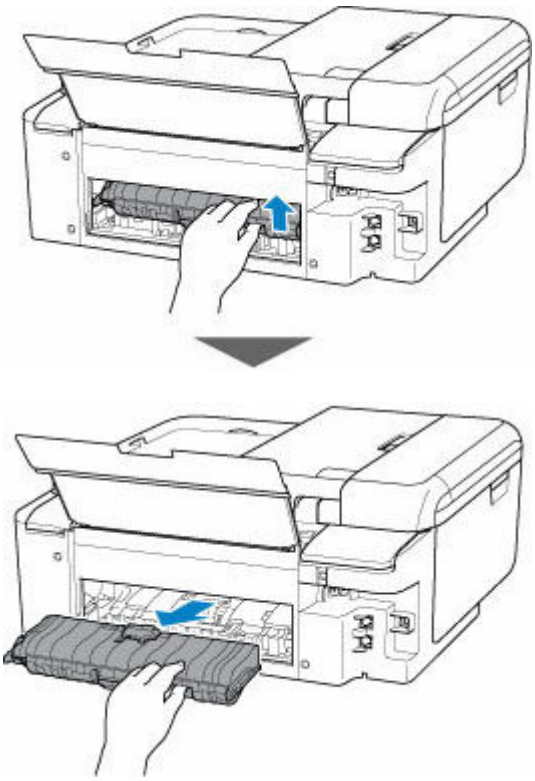

2. Slowly pull out paper.

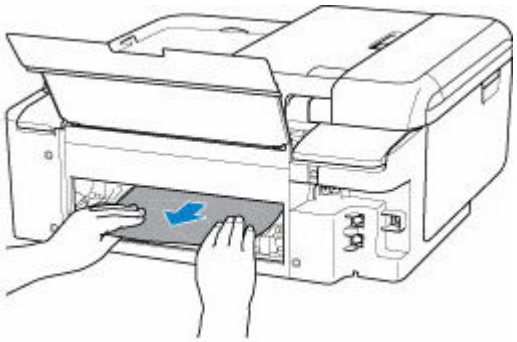

Note

- Do not touch the inner parts of the printer.

3. Make sure all jammed paper is removed.

4. If parts (A) are raised, lower them toward you.

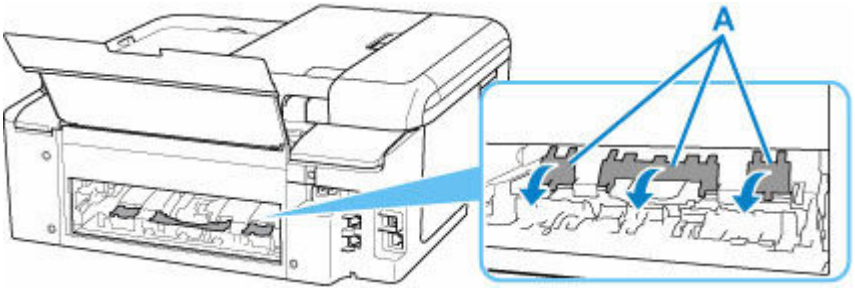

5. Attach transport unit cover.

Insert the transport unit cover slowly all the way into printer and take down the transport unit cover.

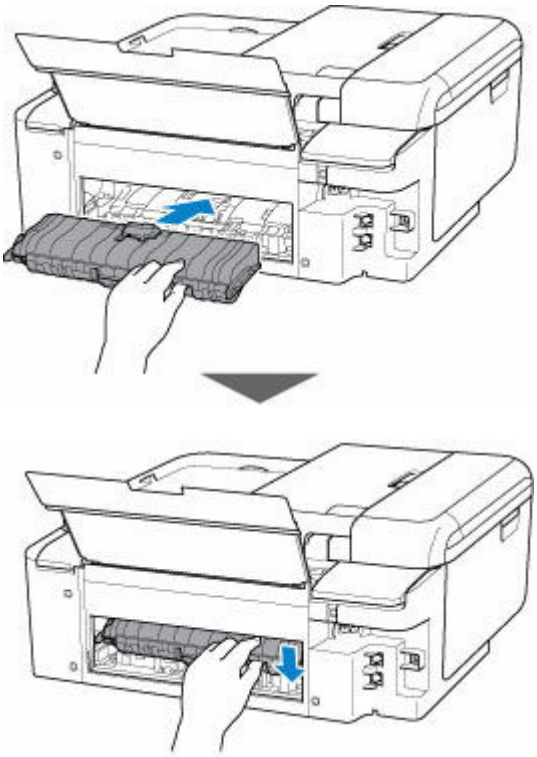

6. Attach rear cover.

Insert the projections of the right side of the rear cover into the printer, and then push the left side of the rear cover until it is closed completely.

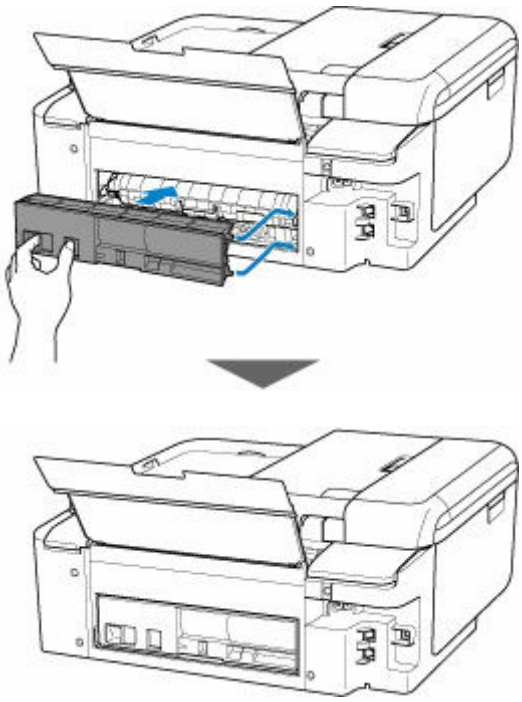

7. Plug in the printer again and turn it back on.

All jobs in the print queue are canceled. Redo the printing.

Note

- When reloading the paper, make sure you are using suitable paper and loading it correctly.
- Before printing, open the operation panel, pull out the paper output tray and the paper output support, then open the output tray extension.

If the measures above do not solve the problem, contact your nearest Canon service center to request a repair.

1000

Cause

Possible causes include the following.

- There is no paper in the rear tray.
- Paper is not loaded in the rear tray properly.

What to Do

Take the corresponding actions below.

- Load paper in the rear tray.

  ➡ Loading Plain Paper / Photo Paper in Rear Tray

- Align the paper guides of the rear tray with both edges of the paper.

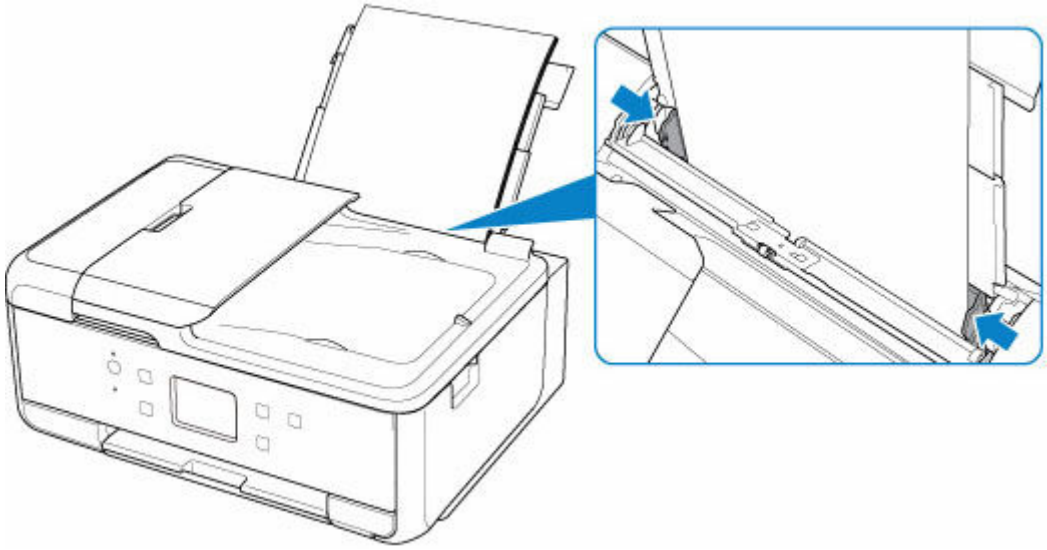

- Close the feed slot cover.

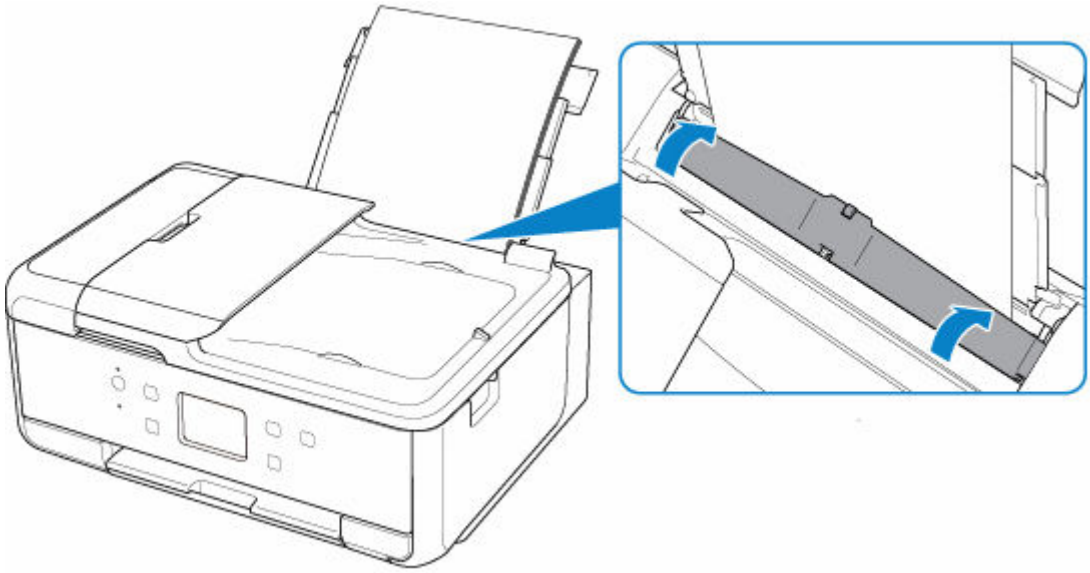

After carrying out the above measures, select **OK** on the printer's touch screen to cancel the error.

Note

- To cancel printing, press the printer's **Stop** button.

1003

Cause

Possible causes include the following.

- There is no paper in the cassette.
- Paper is not loaded in the cassette properly.

What to Do

Take the corresponding actions below.

- Load paper in the cassette.

  ➡ Loading Plain Paper in Cassette

  Note

  - The loadable paper differs depending on the paper source. The loadable paper in the cassette is A4, Letter, A5, or B5 size plain paper.

- Align the paper guides of the cassette with the edges of the paper.

After carrying out the above measures, select **OK** on the printer's touch screen to cancel the error.

Note

- To cancel printing, press the printer's **Stop** button.
- When the jammed paper is removed from the rear side of the printer, the transport unit cover may not be installed correctly. Refer to the following page.

  ➡ Removing Jammed Paper from Rear Side

No Paper in Cassette during Printer Setup

Load one or more sheets of A4 or Letter size plain paper in the cassette.

Note

- To load A4 size paper in the cassette, press down the lock (A) on the cassette, then extend the cassette.

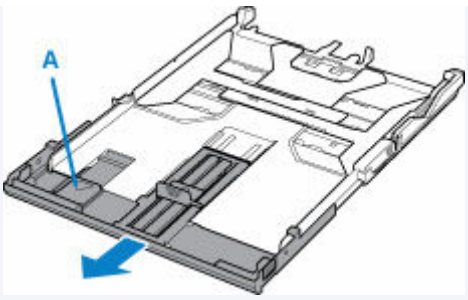

- After loading the paper, align the paper guides of the cassette with the edges of the paper.

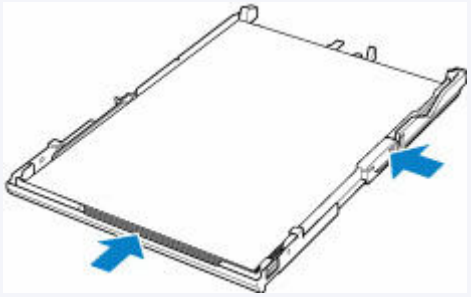

Select **OK** on the printer's touch screen to cancel the error.

Note

- If you are printing a print head alignment sheet during printer setup, do not cancel printing.

1200

Cause

Scanning unit / cover is open.

What to Do

Close the scanning unit / cover and wait for a while.

Do not forget to close it, such as after replacing ink tanks.

1401

Cause

Print head may be damaged.

What to Do

Turn off the printer and turn it back on.

If this does not solve the problem, contact your nearest Canon service center to request a repair.

Important

- If you unplug the power cord, all the faxes stored in the printer's memory are deleted.

1600

Cause

Ink may have run out.

What to Do

Replacing the ink tank is recommended.

If printing is in progress and you want to continue printing, tap **OK** on the printer with the ink tank installed. Then printing can continue. Replacing the ink tank is recommended after the printing.

Since the information contained in the fax may be lost if it is printed in this condition, the received fax will not be printed and will be stored in the printer's memory until the ink is replaced. You must manually print out faxes that were stored in the memory.

You can change the setting so that the received fax is forcibly printed out instead of being stored in the memory, but all or part of the fax information may not be printed because of the ink out condition.

1660

Cause

The ink tank cannot be recognized.

What to Do

Printing cannot be performed because the ink tank is not installed or is not compatible with this printer.

Check the ink tank.

If you want to cancel printing, press the printer's **Stop** button.

1688

Cause

The ink has run out.

What to Do

Replace the ink tank and close the scanning unit / cover.

If you want to continue printing in this condition, you need to disable the function for detecting the remaining ink level. Press and hold the printer's **Stop** button for at least 5 seconds, and then release it.

With this operation, disabling the function for detecting the remaining ink level is memorized.

Please be advised that Canon shall not be liable for any malfunction or trouble caused by using a non-genuine Canon ink tank or by using non-genuine Canon ink.

Note

- If the function for detecting the remaining ink level is disabled, the ink tank is displayed in white on the touch screen when the current ink level is checked.

1689

Cause

Printer detected ink out condition.

What to Do

Replace the ink tank and close the scanning unit / cover.

An ink tank that was once empty is installed.

If you want to continue printing, you need to disable the function for detecting the remaining ink level. To disable this function, press and hold the printer's **Stop** button for at least 5 seconds, and then release it.

With this operation, disabling the function for detecting the remaining ink level is memorized.

Please be advised that Canon shall not be liable for any malfunction or trouble caused by using a non-genuine Canon ink tank or by using non-genuine Canon ink.

Note

- If the function for detecting the remaining ink level is disabled, the ink tank is displayed in white on the touch screen when the current ink level is checked.

1700

Cause

Ink absorber is almost full.

What to Do

Select **OK** on the printer's touch screen to continue printing. Contact your nearest Canon service center to request a repair.

Important

- If you unplug the power cord, all the faxes stored in the printer's memory are deleted.

Note

- In the case of warnings or errors caused by remaining ink levels, the printer cannot print or scan.

Shipping Tape etc. Are Still Attached (1890)

Cause

Tape for securing print head holder during transportation may still be attached.

What to Do

Open the scanning unit / cover and make sure the tape for securing the print head holder during transportation has been removed.

If the tape is still there, remove it and close the scanning unit / cover.

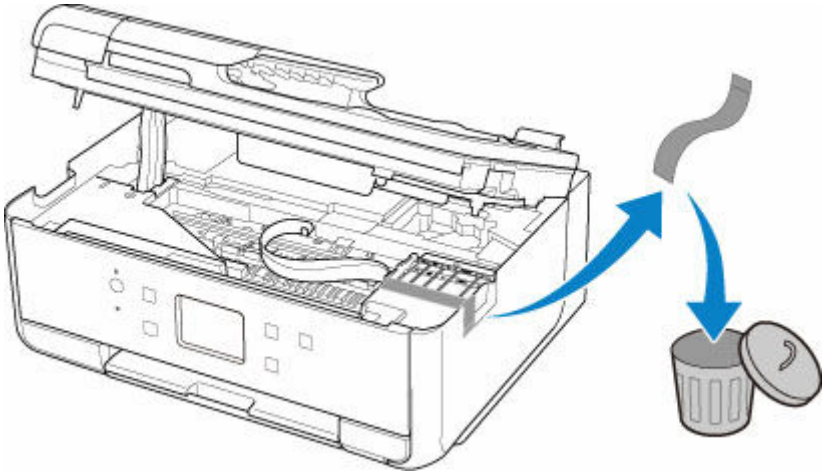

In the case of the first printer setup, click here, select your printer name on the page, and follow the instructions.

2110

Cause

Paper settings specified when printing/copying do not match the paper information for the cassette registered on the printer.

Note

- For the appropriate combination of the paper settings specified on the printer driver and the paper information registered on the printer, refer to the following.
  - ➡ Paper Settings on the Printer Driver and the Printer (Media Type) (Windows)
  - ➡ Paper Settings on the Printer Driver and the Printer (Paper Size) (Windows)
- For copying, make the paper settings for copying match the paper information for the cassette registered on the printer.
- For how to register paper information on the printer, refer to the following.
  - ➡ Paper Settings

If the paper settings specified when printing differ from the paper information for the cassette registered on the printer, the following message appears on the printer's touch screen.

- Paper settings specified on the printer driver when printing:

  Paper size: **A5**

  Media type: **Plain paper**
- Paper information for the cassette registered on the printer:

  Paper size: **A4**

  Media type: **Plain paper**

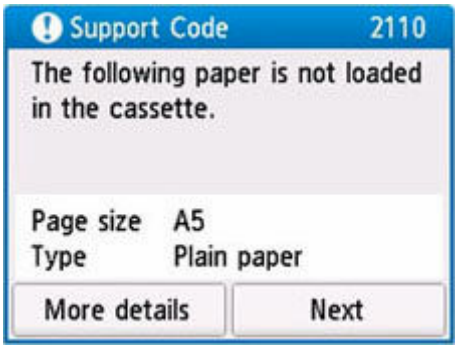

What to Do

Select **Next** on the printer's touch screen to display the screen below.

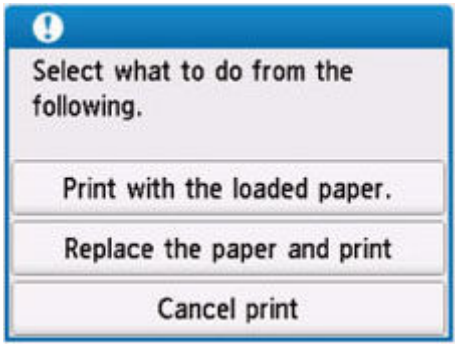

Select the appropriate action.

Note

- Depending on the settings, some of the options below may not be displayed.

Print with the loaded paper.

Select this option to print/copy on the loaded paper with the paper settings specified when printing/copying.

For example, when the paper size specified when printing is A5 and the paper information for the cassette is registered as A4, select this option to print on an A4 paper loaded in the cassette with the A5 setting.

Replace the paper and print

Select this option to print/copy after changing the paper in the cassette.

For example, when the paper size specified when printing is A5 and the paper information for the cassette is registered as A4, select this option to print after changing the paper in the cassette with an A5 paper.

After changing the paper and inserting the cassette, the paper information registration screen for the cassette appears. Register the paper information on the printer according to the loaded paper.

Note

- If you do not know the paper size and media type to be loaded in the cassette, press the printer's **Back** button. The paper size and media type are displayed.
- For the appropriate combination of the paper settings specified on the printer driver and the paper information registered on the printer, refer to the following.

➡ Paper Settings on the Printer Driver and the Printer (Media Type) (Windows)
➡ Paper Settings on the Printer Driver and the Printer (Paper Size) (Windows)

Cancel print

Cancels printing/copying.

Select this option when you want to change the paper settings specified when printing/copying. Change the paper settings and try printing/copying again.

Note

- You can configure the setting to hide the misprint prevention message. When set to hide the message, printing/copying begins regardless of whether the paper settings specified when printing/copying and the paper information of the cassette registered on the printer match.

- To change whether to display the misprint prevention message when printing/copying without using the printer driver:

  ➡ Feed settings

- To change whether to display the misprint prevention message when printing using the printer driver:

  ➡ Changing the Printer Operation Mode (Windows)
  ➡ Changing the Printer Operation Mode (macOS)

2113

Cause

Paper settings specified when printing/copying do not match either the rear tray or the cassette paper information registered on the printer.

Note

- For the appropriate combination of the paper settings specified on the printer driver and the paper information registered on the printer, refer to the following.
  - ➡ Paper Settings on the Printer Driver and the Printer (Media Type) (Windows)
  - ➡ Paper Settings on the Printer Driver and the Printer (Paper Size) (Windows)
- For copying, make the paper settings for copying match either the rear tray or the cassette paper information registered on the printer.
- For how to register paper information on the printer, refer to the following.
  - ➡ Paper Settings

If the paper source is set to be selected automatically and the paper settings specified when printing differ from either the rear tray or the cassette paper information registered on the printer, the following message appears on the printer's touch screen.

- Paper settings specified on the printer driver when printing:

  Paper size: **A5**

  Media type: **Plain paper**
- Paper information for the rear tray and the cassette registered on the printer:

  Paper size: **A4**

  Media type: **Plain paper**

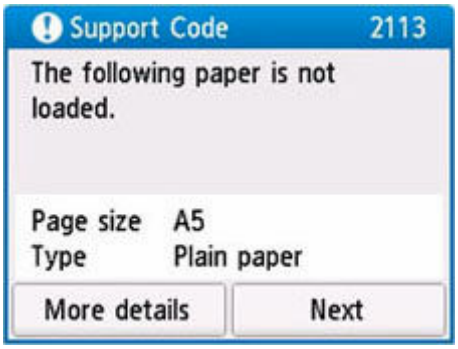

What to Do

Select **Next** on the printer's touch screen to display the screen below.

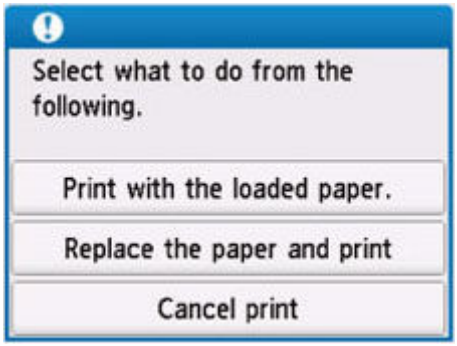

Select the appropriate action.

Note

- Depending on the settings, some of the options below may not be displayed.

Print with the loaded paper.

Select this option to print/copy on the loaded paper with the paper settings specified when printing/copying.

For example, when the paper size specified when printing is A5 and both the paper information for the rear tray and the paper information for the cassette are registered as A4, select this option to print on an A4 paper with the A5 setting.

Replace the paper and print

Select this option to print/copy after changing the paper in the rear tray or the cassette.

For example, when the paper size specified when printing is A5 and both the paper information for the rear tray and the paper information for the cassette are registered as A4, select this option to print after changing the paper in the rear tray or the cassette with an A5 paper.

After changing the paper, the paper information registration screen appears. Register the paper information on the printer according to the loaded paper.

Note

- If you do not know the paper size and media type to be loaded in the rear tray or cassette, press the printer's **Back** button. The paper size and media type are displayed.
- For the appropriate combination of the paper settings specified on the printer driver and the paper information registered on the printer, refer to the following.

➡ Paper Settings on the Printer Driver and the Printer (Media Type) (Windows)
➡ Paper Settings on the Printer Driver and the Printer (Paper Size) (Windows)

Cancel print

Cancels printing/copying.

Select this option when you want to change the paper settings specified when printing/copying. Change the paper settings and try printing/copying again.

Note

- You can configure the setting to hide the misprint prevention message. When set to hide the message, printing/copying begins regardless of whether the paper settings specified when printing/copying and the paper information of the rear tray registered on the printer or the cassette match.

- To change whether to display the misprint prevention message when printing/copying without using the printer driver:

  ➡ Feed settings

- To change whether to display the misprint prevention message when printing using the printer driver:

  ➡ Changing the Printer Operation Mode (Windows)
  ➡ Changing the Printer Operation Mode (macOS)

2114

Cause

Paper settings specified when printing/copying do not match the paper information for the rear tray registered on the printer.

Note

- For the appropriate combination of the paper settings specified on the printer driver and the paper information registered on the printer, refer to the following.
  - ➡ Paper Settings on the Printer Driver and the Printer (Media Type) (Windows)
  - ➡ Paper Settings on the Printer Driver and the Printer (Paper Size) (Windows)
- For copying, make the paper settings for copying match the paper information for the rear tray registered on the printer.
- For how to register paper information on the printer, refer to the following.
  - ➡ Paper Settings

If the paper settings specified when printing differ from the paper information for the rear tray registered on the printer, the following message appears on the printer's touch screen.

- Paper settings specified on the printer driver when printing:

  Paper size: **A5**

  Media type: **Plain paper**
- Paper information for the rear tray registered on the printer:

  Paper size: **A4**

  Media type: **Plain paper**

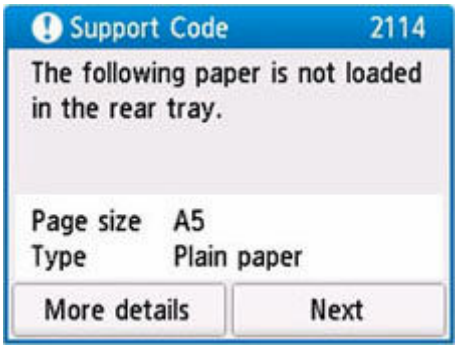

What to Do

Select **Next** on the printer's touch screen to display the screen below.

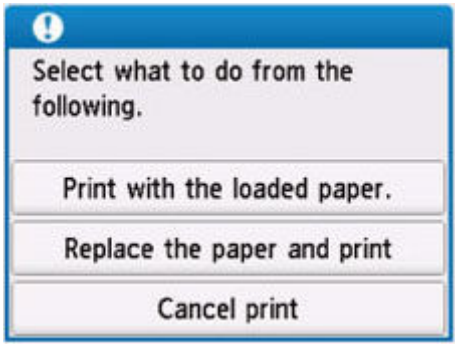

Select the appropriate action.

Note

- Depending on the settings, some of the options below may not be displayed.

Print with the loaded paper.

Select this option to print/copy on the loaded paper with the paper settings specified when printing/copying.

For example, when the paper size specified when printing is A5 and the paper information for the rear tray is registered as A4, select this option to print on an A4 paper loaded in the rear tray with the A5 setting.

Replace the paper and print

Select this option to print/copy after changing the paper in the rear tray.

For example, when the paper size specified when printing is A5 and the paper information for the rear tray is registered as A4, select this option to print after changing the paper in the rear tray with an A5 paper.

After changing the paper and closing the feed slot cover, the paper information registration screen for the rear tray appears. Register the paper information on the printer according to the loaded paper.

Note

- If you do not know the paper size and media type to be loaded in the rear tray, press the printer's **Back** button. The paper size and media type are displayed.
- For the appropriate combination of the paper settings specified on the printer driver and the paper information registered on the printer, refer to the following.

➡ Paper Settings on the Printer Driver and the Printer (Media Type) (Windows)
➡ Paper Settings on the Printer Driver and the Printer (Paper Size) (Windows)

Cancel print

Cancels printing/copying.

Select this option when you want to change the paper settings specified when printing/copying. Change the paper settings and try printing/copying again.

Note

- You can configure the setting to hide the misprint prevention message. When set to hide the message, printing/copying begins regardless of whether the paper settings specified when printing/copying and the paper information of the rear tray registered on the printer match.

- To change whether to display the misprint prevention message when printing/copying without using the printer driver:

  ➡ Feed settings

- To change whether to display the misprint prevention message when printing using the printer driver:

  ➡ Changing the Printer Operation Mode (Windows)
  ➡ Changing the Printer Operation Mode (macOS)

2900

Cause

Scanning print head alignment sheet failed.

What to Do

Select **OK** on the printer's touch screen to cancel the error and take the corresponding actions below.

- Make sure the print head alignment sheet is set in the correct position and orientation on the platen.
- Make sure the platen and the print head alignment sheet are not dirty.
- Load A4 or Letter size plain paper in the cassette.
- Check the print head condition by printing the nozzle check pattern.

After carrying out the above actions, perform automatic print head alignment again.

If the error is still not resolved, select **OK** on the printer's touch screen to cancel the error and perform manual print head alignment.

2901

Cause

Print head alignment pattern has been printed and printer is waiting to scan sheet.

What to Do

Scan the printed alignment pattern.

1. Load print head alignment sheet on platen.

   Place the printed side down and align the mark ◤ in the upper left corner of the sheet with the alignment mark ⇲.

   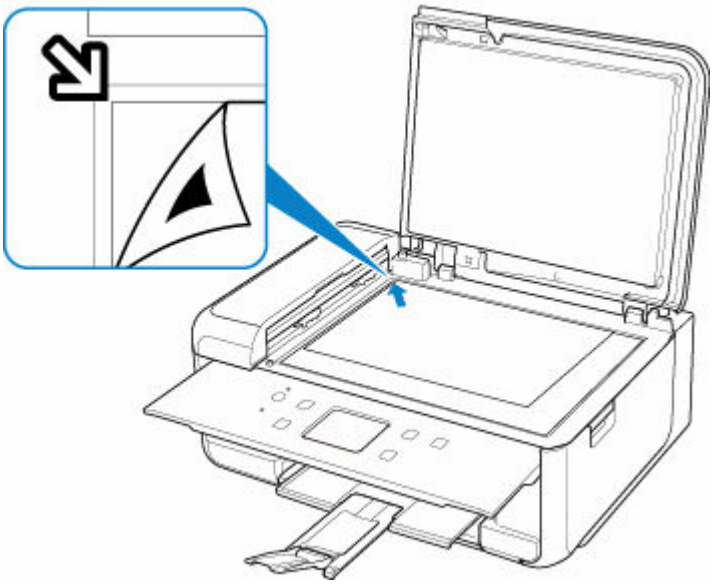

2. Slowly close the document cover and select **OK** on printer's touch screen.

   The printer starts scanning the print head alignment sheet and automatically adjusts the print head position.

4103

Cause

Cannot perform printing with current print settings.

What to Do

Press the printer's **Stop** button to cancel printing.

Change the print settings specified when printing and retry printing.

5011

Cause

Printer error has occurred.

What to Do

Turn off the printer and unplug it.

Plug in the printer again and turn it back on.

If this does not solve the problem, contact your nearest Canon service center to request a repair.

Important

- If you unplug the power cord, all the faxes stored in the printer's memory are deleted.

5012

Cause

Printer error has occurred.

What to Do

Turn off the printer and unplug it.

Plug in the printer again and turn it back on.

If this does not solve the problem, contact your nearest Canon service center to request a repair.

Important

- If you unplug the power cord, all the faxes stored in the printer's memory are deleted.

5100

Cause

Printer error has occurred.

What to Do

If printing is in progress, press the printer's **Stop** button to cancel printing and turn off the printer.

Check the following:

- Make sure print head holder motion is not impeded by tapes for securing the print head holder during transportation, jammed paper, etc.

  Remove any impediment.

  Important

  - When clearing an impediment to print head holder motion, be careful not to touch white belt (A).

    If you soil or scratch this part by touching it with paper or your hand, it could damage the printer.

- Make sure the ink tanks are properly installed.

  Press ink tanks until they click into place.

Turn the printer back on.

If this does not solve the problem, contact your nearest Canon service center to request a repair.

Important

- If you unplug the power cord, all the faxes stored in the printer's memory are deleted.

5200

Cause

Printer error has occurred.

What to Do

Turn off the printer and unplug it.

After a while, plug in the printer again and turn it back on.

If this does not solve the problem, contact your nearest Canon service center to request a repair.

Important

- If you unplug the power cord, all the faxes stored in the printer's memory are deleted.

5B00

Cause

Printer error has occurred.

What to Do

Contact your nearest Canon service center to request a repair.

Important

- If you unplug the power cord, all the faxes stored in the printer's memory are deleted.

Note

- In the case of warnings or errors caused by remaining ink levels, the printer cannot print or scan.

6000

Cause

Printer error has occurred.

What to Do

If the paper is jammed, remove it depending on the jammed location and cause.

➡ What to Do When Paper Is Jammed

Turn off the printer and unplug it.

Plug in the printer again and turn it back on.

If this does not solve the problem, contact your nearest Canon service center to request a repair.

Important

- If you unplug the power cord, all the faxes stored in the printer's memory are deleted.

C000

Cause

Printer error has occurred.

What to Do

If printing is in progress, press the printer's **Stop** button to cancel printing and turn off the printer.

Check the following:

- Make sure print head holder motion is not impeded by tapes for securing the print head holder during transportation, jammed paper, etc.

  Remove any impediment.

  Important

  - When clearing an impediment to print head holder motion, be careful not to touch white belt (A).

    If you soil or scratch this part by touching it with paper or your hand, it could damage the printer.

- Make sure the ink tanks are properly installed.

  Press ink tanks until they click into place.

Turn the printer back on.

If this does not solve the problem, contact your nearest Canon service center to request a repair.

Important

- If you unplug the power cord, all the faxes stored in the printer's memory are deleted.