# MANUALE D'USO
MACCHINA DA CAFFÈ AUTOMATICA

IT

# USER MANUAL
BEAN TO CUP COFFEE MACHINE

EN

# MANUEL DE L'UTILISATEUR
MACHINE À CAFÉ AUTOMATIQUE

FR

# GEBRAUCHSANLEITUNG
AUTOMATISCHE KAFFEEMASCHINE

DE

# GEBRUIKSAANWIJZING
AUTOMATISCH KOFFIEZETAPPARAAT

NL

# MANUAL DE USO
MÁQUINA DE CAFÉ AUTOMÁTICA

ES

# MANUAL DE USO
MÁQUINA DE CAFÉ AUTOMÁTICA

PT

# BRUKSANVISNING
AUTOMATISK KAFFEMASKIN

SV

# РУКОВОДСТВО ПО ЭКСПЛУАТАЦИИ
АВТОМАТИЧЕСКАЯ КОФЕМАШИНА

RU

# BRUGSANVISNING
AUTOMATISK KAFFEMASKINE

DA

# INSTRUKCJA OBSŁUGI
AUTOMATYCZNY EKSPRES DO KAWY

PL

# KÄYTTÖOHJE
AUTOMAATTINEN KAHVINKEITIN

FI

# BRUKSANVISNING
AUTOMATISK KAFFEMASKIN

NO

# كتيب الاستخدام
ماكينة تحضير القهوة

AR

smeg

Consigliamo di leggere attentamente questo manuale, che riporta tutte le indicazioni per mantenere inalterate le qualità estetiche e funzionali dell'apparecchio acquistato.
Per ulteriori informazioni sul prodotto: www.smeg.com

We advise you to read this manual carefully, as it contains all the instructions for managing the appliance's aesthetic and functional qualities.
For further information on the product: www.smeg.com

Nous conseillons de lire attentivement ce manuel, qui comprend toutes les indications pour maintenir inaltérées les qualités esthétiques et fonctionnelles de l'appareil acheté.
Pour obtenir des informations supplémentaires sur le produit : www.smeg.com

Wir empfehlen, diese Bedienungsanleitung, die sämtliche Anweisungen enthält, um das Aussehen und die Funktionsfähigkeit des Geräts zu erhalten, sorgfältig zu lesen.
Für weitere Informationen über das Produkt wird auf www.smeg.com verwiesen

We adviseren om deze handleiding aandachtig door te lezen. Ze bevat aanwijzingen die nodig zijn om de esthetische en functionele eigenschappen van het gekochte apparaat intact te houden.
Bezoek voor meer informatie over het product: www.smeg.com

Aconsejamos leer atentamente este manual que contienen todas las indicaciones para mantener inalterada la calidad estética y funcional del aparato adquirido.
Más información sobre el producto en: www.smeg.com

Aconselhamos que leia atentamente este manual, que refere todas as indicações para manter inalteradas as qualidades estéticas e funcionais do aparelho comprado.
Para mais informações sobre o produto: www.smeg.com

Vi rekommenderar att ni noga läser denna handbok som anger alla de nödvändiga anvisningarna för att bibehålla den inköpta apparatens utseende och funktioner.
För mer information om produkten: www.smeg.com

Мы рекомендуем вам внимательно прочитать данное руководство, в котором приводятся все указания, необходимые для поддержания неизменными эстетических и функциональных свойств приобретенного прибора.
Дополнительную информацию об изделии можно получить на сайте: www.smeg.com

Vi anbefaler, at du nøje læser denne vejledning, som indeholder alle anvisninger til at holde det købte apparat i perfekt funktionsmæssig og æstetisk stand.
For yderligere informationer om produktet: www.smeg.com

Zalecamy uważne przeczytanie niniejszej instrukcji, która zawiera wszystkie wskazania dla utrzymania jakości estetyki i funkcjonalności zakupionego urządzenia.
Dalsze informacje dotyczące produktu znajdują się na stronie: www.smeg.com

Lue tämä käyttöopas huolellisesti. Ohjeita noudattamalla taataan laitteen oikeaoppinen ylläpito ja sen ominaisuuksien säilyvyys.
Tuotteeseen liittyvät lisätiedot löytyvät osoitteesta www.smeg.com

Vi anbefaler at du leser denne brukerveiledningen grundig, da den inneholder alle indikasjoner for å bevare de estetiske og funksjonenelle kvalitetene til produktet du har kjent.
For ytterligere informasjon om produktet: www.smeg.com

ننصح بقراءة هذا الكتيب بعناية حيث يضم جميع التعليمات التي تضمن الحفاظ على الخصائص الجمالية والوظيفية للمنتج الذي قمت بشرائه.
للمزيد من المعلومات عن المُنتَج برجاء زيارة www.smeg.com

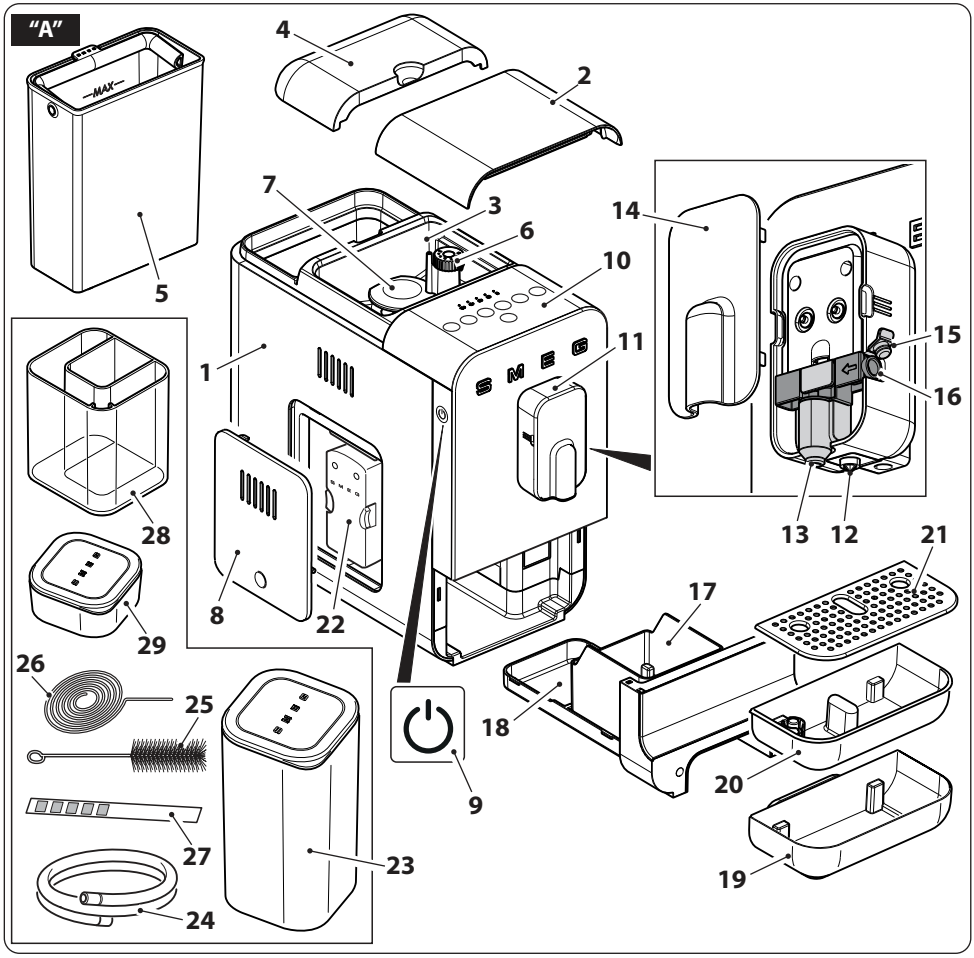
"A"
MAX
1
2
3
4
5
6
7
8
9
10
11
12
13
14
15
16
17
18
19
20
21
22
23
24
25
26
27
28
29

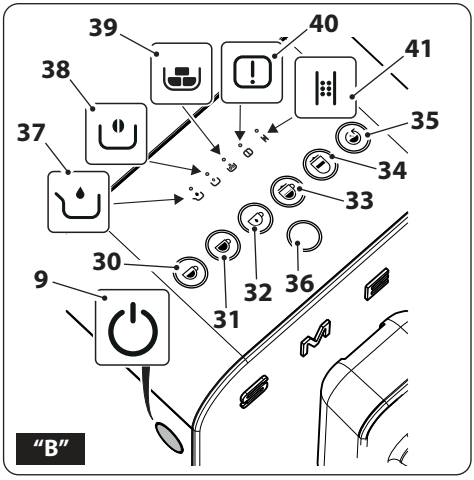
"B"
9
30
31
32
33
34
35
36
37
38
39
40
41

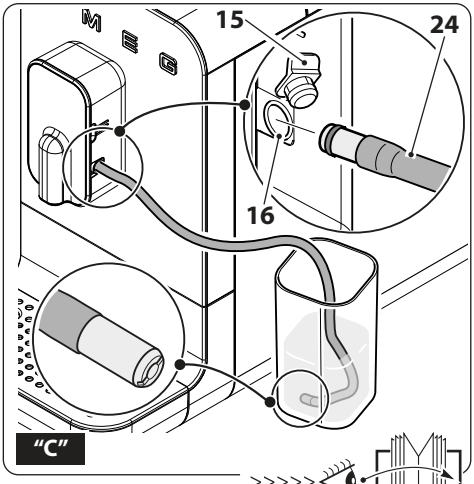
"C"
15
16
24

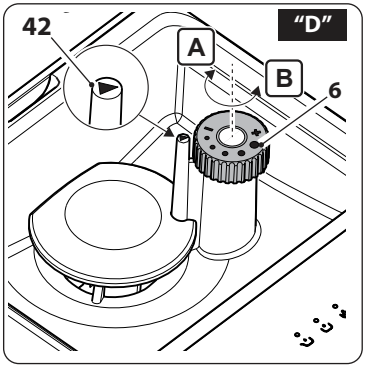
"D"
42
A
B
6

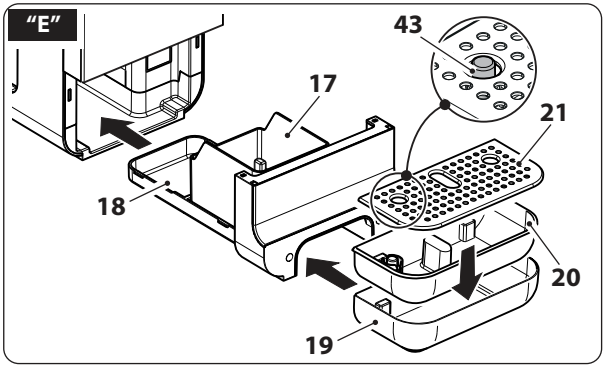
"E"
43
17
21
18
20
19

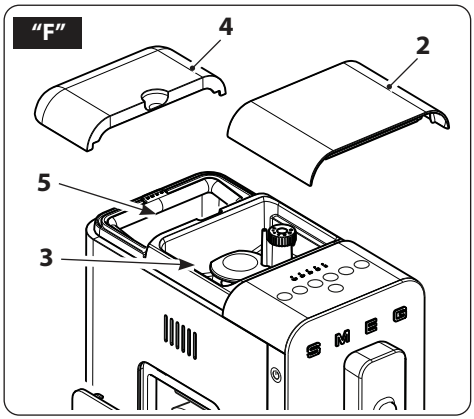
"F"
4
2
5
3

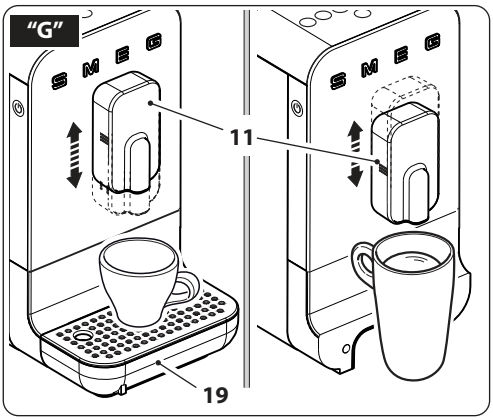
"G"
11
19

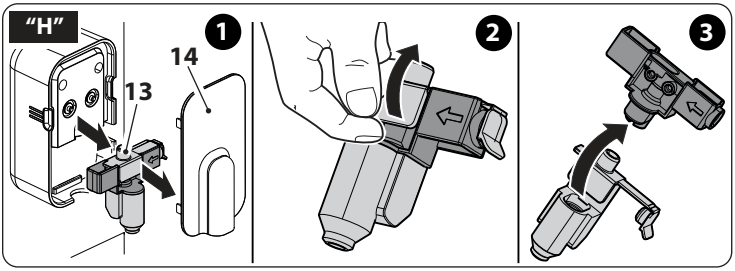
"H"
1
14
13
2
3

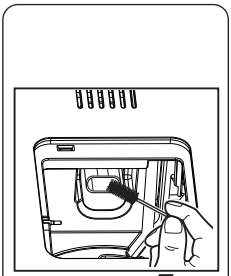

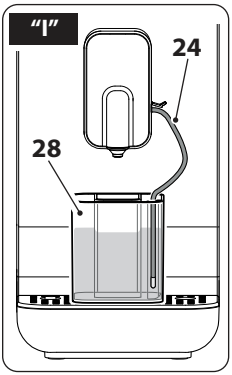
"I"
24
28

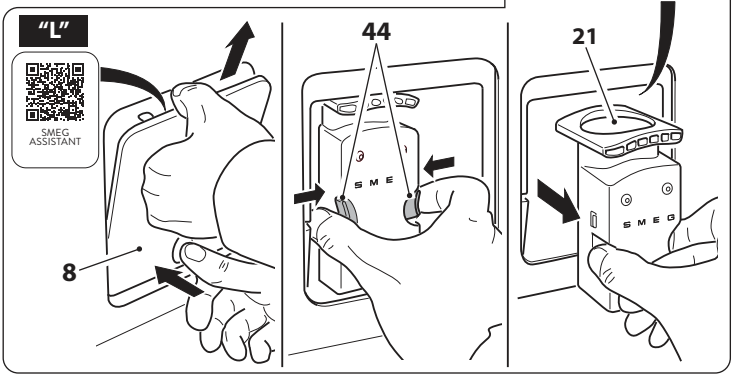
"L"
SMEG ASSISTANT
8
44
21

**Informazioni importanti per l'utente / Important information for the user**
**Informations importantes pour l'utilisateur / Wichtige Informationen für den Benutzer**
**Belangrijke informatie voor de gebruiker / Información importante para el usuario**
**Informações importantes para o utilizador / Viktig information för användaren**
**Важная информация для пользователя / Vigtig information til brugeren**
**Ważne informacje dla użytkownika / Tärkeitä tietoja käyttäjälle**
**Viktig informasjon for brukere / معلومات هامة للمستخدم**

**Avvertenze / Instructions / Avertissements / Hinweise / Waarschuwingen / Advertencias / Advertências / Varningar / Меры предосторожности / Advarsler / Ostrzeżenia / Varoitukset / Advarsler / تحذيرات**

Informazioni generali su questo manuale d'uso, di sicurezza e per lo smaltimento finale / General information on this user manual, on safety and final disposal / Informations générales sur ce manuel d'utilisation, sur la sécurité et sur l'élimination définitive de l'appareil / Allgemeine Informationen zu dieser Gebrauchsanleitung, zur Sicherheit und die endgültige Entsorgung / Algemene informatie over deze handleiding, veiligheidsinstructies en uiteindelijke verwerking / Información general del manual relativa al uso, la seguridad y la eliminación final / Informações gerais sobre este manual do utilizador, segurança e para a eliminação final / Allmän information om denna bruksanvising, om säkerhet och för slutligt bortskaffande / Общая информация о данном руководстве по эксплуатации, безопасности и окончательной утилизации / Generelle oplysninger om denne betjenings- og sikkerhedsvejledning samt endelig bortskaffelse / Ogólne informacje dotyczące użytkowania, bezpieczeństwa i utylizacji / Käyttöohjetta, turvallisuutta ja käytöstä poistoa koskevat yleistiedot / Generell informasjon om denne brukerveiledningen, sikkerhet og endelig kassering av produktet / معلومات عامة عن دليل استخدام هذا الجهاز وسلامة استخدامه وكيفية التخلص عن الجهاز بشكل نهائي

**Descrizione / Description / Description / Beschreibung / Beschrijving / Descripción / Descrição / Beskrivning / Описание / Beskrivelse / Opis / Kuvaus / Beksrivelse / الوصف**

Descrizione dell'apparecchio / Appliance description / Description de l'appareil / Beschreibung des Geräts / Omschrijving van het apparaat / Descripción del aparato / Descrição do aparelho / Beskrivning av apparaten / Описание прибора / Beskrivelse af apparatet / Opis urządzenia / Laitteen kuvaus / Beskrivelse av apparatet / وصف الجهاز

**Uso / Use / Utilisation / Gebrauch / Gebruik / Uso / Utilização / Användning / Использование / Anvendelse / Użytkowanie / Käyttö / Bruk / الإستعمال**

Informazioni sull'uso dell'apparecchio / Information on using your appliance / Informations sur l'utilisation de l'appareil / Informationen zum Gebrauch des Geräts / Informatie over het gebruik van het apparaat / Información sobre el uso del aparato / Informações sobre a utilização do aparelho / Information om användning av apparaten / Информация об использовании прибора / Oplysninger om brug af apparatet / Informacje dotyczące użytkowania urządzenia / Laitteistoa koskevat käyttöohjeet / Informasjon om bruken av apparatet / معلومات عن استخدام الجهاز

**Pulizia e manutenzione / Cleaning and care / Nettoyage et entretien / Reinigung und Wartung / Reiniging en onderhoud / Limpieza y mantenimiento / Limpeza e manutenção / Rengöring och underhåll / Чистка и техническое обслуживание / Rengøring og vedligeholdelse / Czyszczenie i konserwacja / Puhdistus ja hoito / Rengjøring og vedlikehold / التنظيف و الصيانة**

Informazioni per la corretta pulizia e manutenzione dell'apparecchio / Information for proper cleaning and maintenance of the appliance/ Informations pour un nettoyage et un entretien corrects de l'appareil / Informationen zur ordnungsgemäßen Reinigung und Wartung des Geräts / Informatie voor de juiste wijze van reiniging en onderhoud van het apparaat / Información sobre la limpieza y el mantenimiento correctos del aparato / Informações para a limpeza e manutenção corretas do aparelho / Information för korrekt rengöring och underhåll av apparaten / Информация по корректной очистке и техобслуживанию прибора / Oplysninger om korrekt rengøring og vedligeholdelse af apparatet / Informacje dotyczące prawidłowego czyszczenia i konserwacji urządzenia / Laitteiston oikeaa puhdistusta ja huoltoa koskevat tiedot / Informasjon for korrekt rengjøring og vedlikehold av apparatet / معلومات لتنظيف وصيانة الجهاز بشكل صحيح

**Avvertenza di sicurezza / Safety instructions / Consignes de sécurité / Sicherheitshinweise / Veiligheidswaarschuwingen / Advertencia de seguridad / Advertências de segurança / Säkerhetsvarning / Предупреждение о безопасности / Sikkerhedsanvisninger / Ostrzeżenie dotyczące bezpieczeństwa / Turvallisuuteen liittyvät varoitukset / Sikkerhetsadvarsler / تحذير للسلامة**

**Informazione / Information / Information / Information / Informatie / Información / Informação / Information / Информация / Information / Informacja / Tietoa / Informasjon / معلومات**

**Suggerimento / Advice / Conseil / Empfehlungen / Aanbeveling / Sugerencia / Sugestões / Råd / Рекомендация / Forslag / Porada / Neuvo / Forslag / اقتراحات**

SMEG
ASSISTANT

**Scansiona il QR code per un accesso rapido alla Guida SMEG "How to", per assisterti durante l'uso e installazione del prodotto.**

**Scan the QR code for an easy access to "How to" SMEG guide to assist you during product use and installation.**

**Scannez le code QR pour accéder rapidement au guide SMEG « Comment faire » qui vous aidera à utiliser et à installer le produit.**

**Den QR-Code für einen schnellen Zugriff auf den Leitfaden von SMEG „How to" scannen, um während des Gebrauchs und der Installation behilflich zu sein.**

**Scan de QR-code voor snelle toegang tot de SMEG Gids "How to", die je zal bijstaan tijdens het gebruik en de installatie van het product.**

**Escanear el código QR para acceder rápidamente a la Guía SMEG "How to", que le ayudará durante el uso y la instalación del producto.**

**Digitalize o código QR para obter acesso rápido ao Guia SMEG "How to" da SMEG, para ajudá-lo durante o uso e a instalação do produto.**

**Skanna Qr-koden för en snabb åtkomst till SMEG-guiden "Hur man...", för att hjälpa dig vid användning och installation av produkten.**

Сканируйте QR-код для быстрого доступа к руководству SMEG How to, которое предоставит вам помощь при использовании и установке прибора.

**Scan QR-koden for at få hurtig adgang til SMEG "How to"-guiden, der hjælper dig med brug og installation af produktet.**

Zeskanuj kod QR, aby uzyskać szybki dostęp do Przewodnika SMEG „How to", pomocnego podczas użytkowania i instalacji produktu.

**Skannaa QR-koodi, niin pääset nopeasti käsiksi SMEGIN "How to" -oppaaseen, joka auttaa sinua tuotteen käytön ja asennuksen aikana.**

**Skann QR-koden for rask adgang til SMEG-veiledningen "How to", for hjelp under bruk og installasjon av produktet.**

قم بمسح رمز الاستجابة السريعة للوصول إلى دليل "How to SMEG" للحصول على المعلومات اللازمة لاستخدام المنتج وتثبيته

## NOTES

Il costruttore si riserva di apportare senza preavviso tutte le modifiche che riterrà utili al miglioramento dei propri prodotti. Le illustrazioni e le descrizioni contenute in questo manuale non sono quindi impegnative ed hanno solo valore indicativo.

The manufacturer reserves the right to make any changes deemed useful for the improvement of its products without priornotice. The illustrations and descriptions contained in this manual are therefore not binding and are merely indicative.

Le fabricant se réserve la faculté d'apporter, sans préavis, toutes les modifications qu'il jugera utiles pour l'amélioration de ses produits. Les illustrations et les descriptions figurant dans ce manuel ne sont pas contraignantes et n'ont qu'une valeur indicative.

Der Hersteller behält sich vor, ohne vorherige Benachrichtigung alle Änderungen vorzunehmen, die er zur Verbesserung seiner Produkte für nützlich erachtet. Die in diesem Handbuch enthaltenen Illustrationen und Beschreibungen sind daher unverbindlich und dienen nur zur Veranschaulichung.

De fabrikant behoudt zich het recht voor zonder waarschuwing alle wijzigingen aan te brengen die hij nodig acht om zijn producten te verbeteren. De afbeeldingen en de beschrijvingen die aanwezig zijn in deze handleiding zijn niet bindend, en hebben enkel een aanduidende waarde.

El fabricante se reserva el derecho a aportar sin aviso previo todas las modificaciones que considere útiles para la mejora de sus propios productos. Las ilustraciones y las descripciones contenidas en este manual no comprometen, por tanto, al fabricante y tienen un valor meramente indicativo.

O fabricante reserva-se o direito de efetuar, sem aviso prévio, qualquer modificação que vise o melhoramento dos respetivos produtos. As ilustrações e descrições contidas neste manual, não são, por isso, vinculativas e possuem apenas valor indicativo.

Tillverkaren förbehåller sig rätten att genomföra alla de ändringar som anses nödvändiga för att förbättra de egna produkterna utan att meddela detta i förväg. De illustrationer och beskrivningar som finns i denna bruksanvisning är vägledande och därmed inte bindande.

Производитель оставляет за собой право вносить без предупреждения все изменения, которые посчитает полезными для улучшения собственной продукции. Рисунки и описания, содержащиеся в данном Руководстве по эксплуатации, не имеют обязательств и имеют ознакомительный характер.

Producenten forbeholder sig retten til at foretage eventuelle ændringer, der anses for at være en forbedring af det oprindelige produkt, uden forudgående varsel. Illustrationer og beskrivelser i denne betjeningsvejledning er derfor ikke bindende og kun vejledende.

Producent zastrzega sobie prawo do nanoszenia, bez uprzedniego powiadomienia, wszelkich zmian, które uzna za przydatne w celu ulepszania swoich produktów. Rysunki i opisy zawarte w niniejszej instrukcji nie są zobowiązujące i mają charakter poglądowy.

Valmistaja pidättää itsellään oikeuden tehdä ohjeisiin mielestään tarpeellisia muutoksia ilman ennakkoilmoitusta. Tässä oppaassa olevat kuvat ja piirrokset eivät näin ollen ole sitovia, vaan ne annetaan vain viitteellisessä mielessä.

Produsenten forbeholder seg rett til endringer på sine produkter grunnet tekniske fremskritt, uten forutgående varsel. Illustrasjonene og beskrivelsene i denne bruksanvisningen er derfor ikke bindende og skal kun betraktes som retningsgivende.

"تحتفظ جهة التصنيع لنفسها بالحق في القيام بجميع التعديلات التي تراها مناسبة لتحسين منتجاتها دون إنذار مسبق. ولذلك، لا تعتبر الرسوم التوضيحية والأوصاف الواردة في هذا الدليل مُلزمة وإنما ذات قيمة إرشادية فقط"

Dear Customer,
Thank you very much for purchasing the Smeg Line coffee machine.
By choosing our product, You have opted for a solution in which aesthetics and innovative technical design offer unique objects, which become part of the furnishings.
In fact, a Smeg household appliance always co-ordinates perfectly with other products in the range and, at the same time, can become a design object for the kitchen.
We hope You fully appreciate the functionalities of Your appliance.
Best regards.

*SMEG S.p.A.*

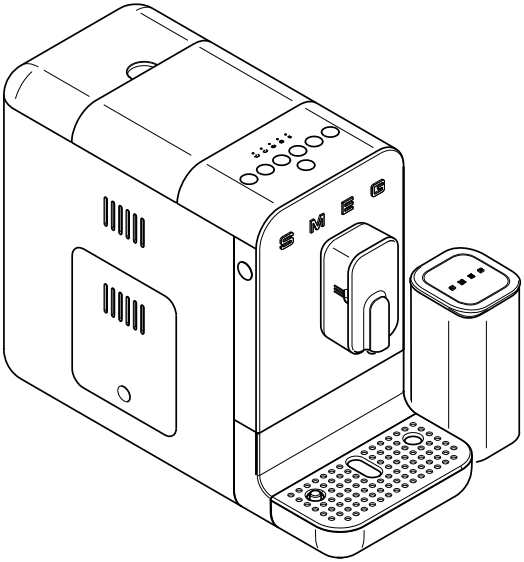


# Model BCC13
# Bean to cup Coffee machine

# Important Safeguards

## SAFETY
### Essential safety recommendations.

Keep these instructions carefully. Whenever the appliance is transferred to other persons, they must also be given these user instructions.

Danger of Electrocution, since the appliance operates on electric current, it is necessary to comply with the following safety warnings:

- Do not touch the plug with wet hands.
- Make sure that the power outlet used is always freely accessible, because only in this way can it be unplugged when necessary.
- If you want to remove the plug from the socket, grasp the plug directly. Do not remove the plug from the socket by pulling on the cable or with wet hands.
- If the appliance should break down, do not attempt to repair it. Switch the appliance off, remove the plug from the power outlet and contact the Smeg Technical After-sales centre.
- If the plug or power supply cable are damaged, have them replaced exclusively by the Technical After-sales centre, so as to prevent all risks.
- Do not immerse the appliance, the power cord, the plug in water or any other liquid.
- Warning: Danger of injury! Improper use of the appliance can cause injury.
  Before cleaning, disconnect the plug.
- Do not allow the power supply cable to dangle over the edge of the table or other surface or to come into contact with hot surfaces.

Choking hazard due to plastic packaging, keep the packaging material (plastic bags, expanded polystyrene) out of the reach of children.

- Do not position the appliance on or in proximity of electric or gas cookers, or in a heated oven.
- Do not wash the appliance in the dishwasher.

### Connecting the appliance

**Warning!** Make sure that the mains voltage and the frequency correspond with those indicated on the data plate on the bottom of the appliance.

Only connect the appliance to a current outlet installed perfectly with minimum capacity of 10A and with an efficient earth.

If the plug and power outlet are incompatible, have the power outlet replaced with a suitable type by qualified staff.

In order to avoid a hazard due to inadvertent resetting of the thermal cut-out, this appliance must not be supplied through an external switching device, such as a timer, or connected to a circuit that is regularly switched on and off by the utility.

- Do not use an adapter.
- Do not use an extension cord.
- Do not spill liquid on the power plug and on the power base.

Failure to observe these warnings can result in death, fire or electric shock.

# Important Safeguards



- Keep the appliance out of the reach of children under the age of 8.
- Children must not play with the appliance.
- The use of this appliance is allowed to people (including children of at least 8 years) with reduced physical, sensory or mental abilities only if they are under the control of adults or have been instructed on the safe use of the appliance and have understood the dangers associated with its use.
- Cleaning or maintenance work can be carried out by children who are at least 8 years old, only under the supervision of an adult.
- Disconnect the appliance from the power outlet before all assembly, disassembly and cleaning operations.

## Danger of burns

- Allow the appliance to cool down before cleaning.
- The coffee machine generates heat and produces hot water and steam during operation. Avoid contact with boiling steam or water.

## Use compliant with destination

- Only use the appliance indoors and at a maximum altitude of 2000 meters.
- Use the device only to prepare coffee-based drinks from grinding coffee beans or to dispense hot water. Other uses are improper.
- Only insert water into the appropriate tank. Use fresh, clean water.
- Use only original spare parts from the manufacturer. The use of spare parts not recommended by the manufacturer could cause fire, electric shock or personal injury.
- The appliance is intended for household and similar use, such as:
  - in the kitchen area for the staff of shops, offices and other work environments;
  - in bed and breakfast and agritourism accommodation;
  - by guests at hotels and motels, and in residential environments.
- Other uses, in restaurants, bars and cafes for example, are improper.

Moreover:

- Do not fill the water container beyond the maximum limit indicated.
- Do not use without water in the tank or without a tank.
- Use only coffee beans to obtain the powder, do not put already ground coffee in the coffee bean hopper.
- Do not insert the appliance in a closed cabinet (built-in type).

Attention: For cleaning surfaces that come into contact with food, observe the special cleaning indications in the instructions.

## Manufacturer's liability

The manufacturer declines all liability for damage undergone by persons and objects due to:

- use of the appliance different from that envisioned;
- user manual has not been read;
- tampering of individual parts of the appliance;
- use of non-original spare parts;
- failure to comply with safety recommendations.

## DISPOSAL

Electrical appliances must not be disposed of with household waste. The appliances that have this symbol are subject to the European Directive 2012/19/EU. All discarded electric and electronic appliances must be disposed of separately from household waste, by taking them to relevant centres envisioned by the Country. By disposing of the discarded appliance correctly, damage to the environment and risks to health will be avoided. For further information regarding disposal of the discarded appliance, contact the Municipal Administration, the Disposal dept. or the shop where the appliance was purchased.

## DESCRIPTION OF THE APPLIANCE (Fig. A)

**1** Machine body.
**2** Coffee bean container lid.
**3** Coffee bean container.
**4** Water tank cover.
**5** Water tank (1,4 l).
**6** Grinding selection knob.
**7** Grinders protection.
**8** Brewing group access door.
**9** ON/OFF button.
**10** Control panel.
**11** Dispenser adjustable in height.
**12** Coffee supply nozzle.
**13** Milk system with milk supply nozzle.
**14** Dispenser cover.
**15** Proteciton cap.
**16** Milk tube connection.
**17** Coffee grounds container.
**18** Drip tray.
**19** External drip tray.
**20** Internal drip tray with level indicator.
**21** Mug holder.
**22** Infuser group.
**23** Milk container with cover.
**24** Milk tube.
**25** Cleaning brush.
**26** Milk tube nozzles cleaning needle.
**27** Water hardness test strip.
**28** Container for cleaning the milk circuit.
**29** Milk tube housing.

## DESCRIPTION OF CONTROLS AND ALARMS (Fig. A-B-C-D)

### ON/OFF button (9)

Pressing the button switches the machine on or off.

### Change dispensing program button (36)

The product has 10 functions, accessible through two menus, *White Menu* and *Orange Menu.*

By pressing this button it is possible to change the dispensing menu from *"White"* and *"Orange"* and vice versa.

| White | Keys LED white |
|---|---|
| 30 | Espresso |
| 31 | Coffee |
| 32 | Hot water |
| 33 | Cappuccino |
| 34 | Latte macchiato |

| Orange | Keys LED orange |
|---|---|
| 30 | Espresso light |
| 31 | Long espresso coffee |
| 32 | American |
| 33 | Espresso macchiato |
| 34 | Milk foam |

### Easy Cleaning key (35)

The LED of the Easy Cleaning key lights up flashing when a complete cleaning of the circuit and of the milk system is advised.
Prolonged press (3 seconds):
the key activates complete cleaning of the milk circuit.
Press and hold only after having correctly connected the milk tube (24) to the relevant connection (16) and after having inserted it into the Container for cleaning the milk circuit (28). See the "Cleaning and Maintenance" section for more details on the topic.

The alarm does not stop the machine thus allowing the user to continue drinks dispensing.

### Empty water tank alarm (37)

The related LED flashes when the tank (5) is absent, or when the water inside it is missing or at an insufficient level. Insert the tank or fill it with water.

### No coffee alarm (38)

The relative LED lights up steadily indicating that the coffee beans in the container (3) have reached the minimum level or are absent. Fill the container with coffee beans.

### Coffee grounds container alarm (39)

Steady lit LED:
Coffee grounds container full (17); empty the container.
Flashing LED:
Missing or incorrectly mounted coffee grounds container (17) or drip tray (18); the machine is blocked until correct mounting of the components.

### Brewing group alarm (40)

Flashing LED:
Door open or brewing group missing or incorrectly assembled; the machine is blocked until the brewing group is correct assembled or door closed.
Stead lit LED:
Indicates that it is advised to clean the area of the infuser group to remove coffee residues which may damage machine operation. Remove the infuser from its seat while the machine is on and reinsert it after cleaning.

### Descaling alarm (41)

Steady lit LED:
Indicates that it is highly recommended to carry out a descaling cycle;
Flashing LED:
The machine is blocked in all its functions, a descaling cycle is mandatory to restore machine operation.

### Grinding adjustment knob (6) (Fig. D)

The appliance is equipped with a knob (6) that allows you to adjust the grinding grain of the coffee according to its uses:
Turning the knob (6) clockwise "A" increases the grinding grain; turning the knob (6) anticlockwise "B" decreases the grinding grain and the ground coffee will be finer (Fig.D).

Turn the knob (6) and match the indicator (42) with the desired grinding level.

The grinding grain adjustment must be carried out when the grinder is in operation or on first use when the bean container is completely empty; turning the knob (6) with the grinder stopped and the beans inside could damage the grinding unit.

## BEFORE FIRST USE (Fig. A-H)

- Unpack the appliance carefully and remove all packaging materials.
- Rinse the dismountable components such as: water tank (5), lids (2,4), door (8), grounds container (17), drip tray (18), drip trays (19,20), mug holder (21), infuser group (22), the milk system (13), the milk bottle with lid (23) and the milk tube (24).

Before use, check that all components are intact and do not show any cracks or breakage.

To clean the milk system (13), remove the system from the dispenser and take of the various components as shown in fig. H, rinse under running water, dry thoroughly and re-mount the machine.

## ASSEMBLY OF COMPONENTS (Fig. E)

- Place the machine on a flat surface and fix the drip tray (19).
- Connect the power supply cable to the socket on the rear of the machine and the other end to a power socket.

## USE (Fig. E-F-G)

- Lift the tank cover (4) and pour fresh water in the tank (5) being sure not to exceed the indicated 'Max' level. Replace the water tank cover when full (9).
- Lift the coffee bean container lid (2) and introduce the coffee beans into the container (3).
- Check that the drip tray (19) is correctly positioned. Make sure that the tray which can be washed in the dishwasher (20) is correctly inserted inside it and mount the mug holder (21).
- Press the button (9), the machine starts the heating phase and the keys light up flashing in sequence.
  At the end of the heating, a self-cleaning cycle of the internal circuits is carried out and, once the cycle is finished, the machine is ready to be used.
- It is possible to adjust the position of the dispenser (11) according to the cup used. For very high cups it is possible to remove the drip tray (19).

At the first use it is recommended to make at least one coffee to make a complete break-in of all the circuits. It is also recommended to run a thorough milk circuit cleaning cycle or to manually clean the milk system (13) components. Please consult the "Cleaning and maintenance" section to this end.

We recommend setting the water hardness upon first use. Please see the "Water hardness settings" paragraph for this reason.

Remember to reassemble the tray (19) at the end of any dispensing.

After 30 minutes of non-use, the machine switches off. If it has produced at least one drink, it carries out a self-cleaning cycle. Press the button (9) to switch on the machine.

## Change of dispensing program

The machine has two dispensing menus in its memory: *White* and *Orange*. To switch from one program to another, press the key (36).
In the *White* menu all the keys are illuminated in white, in the *Orange* menu, all the keys are illuminated in orange.
For the specific functions of each menu, refer to the paragraph "Description of controls and alarms"

Turning off the machine the setting of the *White* or *Orange* dispensing menu remains in the memory at the next restart.

## Coffee drink supply (Espresso, Coffee, Americano, Espresso light, Long espresso coffee) and hot water

- Place a cup or large cup under the dispenser.
- Press the key for the desired function. For each selected function, preparation stops automatically. For specific functions, refer to the paragraph "Description of controls and alarms".
- At the end of dispensing, all the keys light up fixed.

Remember to reassemble the tray (19) at the end of any dispensing.

It is completely normal that after a prolonged inactivity of the machine (breaks longer than 20 min) the first coffees are not at the right temperature. The tips to obtain a hot coffee immediately are given in the section "What to do if..."

The supply of the coffee drinks and hot water may be interrupted at any moment by pressing the dispensing key.

## Dispensing of drinks with milk (Cappuccino, Latte macchiato, Espresso macchiato, Milk foam)

Milk foam consistency may vary depending on the type of used milk. To obtain a good result, it is advised to use whole or semi-skimmed milk at fridge temperature (approximately 5°C).

It is necessary to proceed as follows to prepare these drinks:

### Connection of the milk tube (Fig. C)

- Open the safety cap (15).
- Connect the milk tube (24) to the dispenser, taking care to insert the correct coupling to the connection (16) envisaged on the dispenser, as shown in figure C and to completely immerse the other end.

Make sure the level of milk in the container used does not exceed the tube connection height.

## Cappuccino, Latte macchiato, Espresso macchiato

It is enough to press the key of the desired drink to start dispensing. It is not necessary to move the glass or mug.

- Place a small or large cup underneath the dispenser.
- Press the key of the desired drink. The machine dispenses milk first, then coffee, and stops automatically at the end of the drink.
- At the end of any dispensing of drinks with milk, the key (35) lights up indicating that a complete cleaning of the milk circuit is advised. It is possible to proceed with the immediate cleaning (see the section "Milk system automatic cleaning"). To proceed with dispensing of further drinks without carrying out cleaning, press any key.

## Milk foam

- Place a mug under the dispenser.
- Enter the orange menu using the button and press the key (34). The machine dispenses milk and stops automatically after a few seconds.

Dispensing of the milk foam drink can be interrupted at any moment by pressing the respective dispensing key again.

After any dispensing of the drinks with milk, it is **essential** to proceed with a complete cleaning of the whole circuit and respective components. If it is necessary to prepare various drinks, proceed with cleaning after the last dispensing, before switching off of the machine. See the "Cleaning and Maintenance" paragraph for additional details regarding manual or automatic cleaning of the components.

## Customization of the quantity

It is possible to customize, for each type of selected drink, the desired quantity of coffee or milk.

- Place a small or large cup underneath the dispenser.
- For the drinks Espresso, Espresso Light, Coffee, Long espresso coffee, Hot water, Americano or Milk foam, press one of the keys of the drink to be supplied for at least 3 seconds. The selected key lights up flashing; the machine emits a double sound to report the change of the preset program. Upon reaching the desired quantity of coffee or milk, stop dispensing by pressing the key again; an acoustic signal indicates that the quantity has been memorized.
- In case of Cappuccino, Latte macchiato or Espresso macchiato,press the key of the drink to be supplied for at least 3 seconds. Upon reaching the desired quantity of milk, stop the supply by pressing the key again; an acoustic signal indicates that the quantity of milk has been memorized. Dispensing of coffee follows automatically, press the key again once the desired quanitty has been reached. A new signal indicates memorization of the combined drink.

Any customization of the drinks remains saved for future dispensing.

To restore the manufacturer's settings, press the keys (9) and (36) simultaneously for at least 3 seconds.
The machine emits a single sound to signal the restoration of the factory settings.

## MACHINE SETTINGS (Fig. B)

Through a programming menu it is possible to set the water hardness and the acoustic signals.

### Activation / deactivation of acoustic signals

The acoustic signals can be disabled / enabled by keeping the keys (31) and (36) pressed for three seconds; the key (31) flashes three times indicating the memorization of the setting.

### Setting the water hardness

The machine is factory set to "Hard Water Level". The machine can also be set according to the actual water hardness in the various regions for less frequent descaling.
If you don't know the water hardness, use the supplied test strip (27) and follow the instructions below.

- Remove the supplied reactive strip from its packaging.
- Fully submerge the strip in a glass of water for about one second.
- Remove the strip from the water and slightly shake it. Read the results after about one minute.

If 5 blue stripes appear on the strip, select "soft water" settings.
If 1 or 2 pink stripes appear on the strip, select "average water" settings.
If 3, 4 or 5 pink stripes appear on the strip, select "hard water" settings.

- To open the water hardness settings, simultaneously press and hold down keys (30) and (36) for at least 3 seconds, LEDs (37), (38), (39) will flash simultaneously.
- Choose the water hardness, referring to the following table, pressing the key (30), the LED relating to the selected hardness lights up steadily, the others go off.

| Led | Hardness |
|---|---|
| 37 | Soft |
| 38 | Medium |
| 39 | Hard |

- To memorize the selected hardness, press keys (30) and (36) simultaneously for at least 3 seconds or do not press any key for 15 seconds.

To prolong the machine operation and preserve the aroma and taste of the coffee, it is recommended to use the Smeg Softener Filter (optional, not supplied). For installation and operation, follow the instructions that accompany the accessory. Once installed, set the water hardness level to 'Soft' following the instructions in the previous paragraph.

## CLEANING AND MAINTENANCE (Fig. A-B-C-E-F-G-H-I-L)

Incorrect use Risk of damage to surfaces.
- Do not use steam jets to clean the coffee machine.
- Do not use cleaning products containing chlorine, ammonia or bleach on parts with metal surface finishes (e.g. anodised, nickel- or chrome-plated).
- Do not use abrasive or corrosive detergents (e.g. powder products, stain removers and metallic scourers).
- Do not use rough or abrasive materials or sharp metal scrapers.

### Automatic rinse

After dispensing of a coffee or milk drink, the machine will perform an automatic rinsing of the supply nozzles (12, 13) before switching off.

To ease cleaning operations, it is possible to scan the QR code located inside the service door, which opens a specific web section dedicated to Cleaning and Installation (fig. L).

### Cleaning of the machine body

For a good preservation of the external surfaces it is necessary to clean them regularly at the end of each use, after letting them cool. Clean with a soft cloth dampened with water.

Never immerse the machine body (1) in water or other liquids.

Allow the machine to cool down before cleaning.

Use the supplied brush to clean the empty coffee bean container (3), removing any beans or residue.

Always clean when the machine is off.

### General cleaning

To ensure good operation of the machine, beyond the optimal quality of the drinks, some daily operations of simple cleaning are advised, such as tray (18), drip trays (19, 20) and grounds container (17) cleaning.
We also recommend you routinely clean some specific machine components such as the brewing group (22) or water tank (5). Please see the specific paragraphs for cleaning instructions.

### Cleaning the drip tray (19, 20)

The drip tray (19) envisages an internal tray (20) inside it which is equipped with a red float (43) which protrudes from the mug holder (21) as soon as the maximum level of liquid is exceeded.
- The internal tray (20) can be washed in the dishwasher.
- Clean the tray (19) and the grid (21) in running water with neutral dish detergent.
- Dry the components and reassemble them in the machine.

Do not wash the components in the dishwasher, except for the internal tray (20).

We recommend you clean the external drip tray daily.

## Coffee grounds container cleaning (17) and drip tray (18)

Always empty the coffee grounds container with the appliance switched on. This is the only way of resetting the coffee grounds counter. The counter resets at least 15 seconds after opening the various components and LED (38) flashes.

- Remove the tray (19).
- Remove the grounds container (17) with its tray (18) by pulling it outwards.
- Empty the coffee grounds from the container (17).
- Clean the container (17) and the tray (18) in running water with neutral dish detergent.
- Thoroughly dry components and reassemble on the machine.

When the grounds container is emptied, take care to also empty the drip tray (18) from possible residues.

It is advised to daily clean the coffee grounds container (17) adn the drip tray (18).
It is totally normal to find water residues in the tray. Clean and dry.

## Cleaning the water tank (5)

- Remove the lid (4) and remove the tank (5) from the machine using the appropriate handle.
- Clean the tank (5) in running water with neutral dish detergent and reassemble it in the machine.

The presence of lime scale inside the tank could cause the appliance to malfunction. Make sure the tank is always clean and without lime scale stains.

## Milk container cleaning (23)

Clean the supplied milk container in all of its parts if it has been used for preparation of a milk drink.
Wash all the components with running water and neutral detergent or in the dishwasher, making sure that milk residues do not remain.

## Milk system and circuits cleaning

After dispensing of each drink with milk, the key (35) blinks indicating that it is necessary to proceed with a complete cleaning of the milk circuit.

In the interest of hygiene and to ensure good operation and good dispensing in the cup, it is necessary to daily clean the milk system and circuit if they have been used to prepare milk-based drinks.
It is possible to proceed with complete automatic cleaning via the 'Easy Cleaning' key or Manual cleaning of the components.

- **Manual cleaning of the milk system components**

Manual cleaning of the milk system (13) and the tube (24) is what guarantees more thorough cleaning of the various components.

Wait for the milk system and its dispenser (13) to cool down before proceeding with cleaning.

- Remove the milk tube (24).
- Remove the dispenser lid (14), remove the milk system (13), then dismount the various parts as shown in Fig. "H".

- Use hot running water to clean all of the components of the milk system (13) and the tube (24) and dry them thoroughly.
- Assemble the various parts and reassemble the milk system (13). Ensure that the milk system (13) is correctly mounted in all of its parts. Check the numbering in Fig. "H".
- Fix the milk system (13) in the dispenser (11), by pressing it firmly.
- Lastly, reassemble the dispenser lid (14).

Do not wash the milk system in the dishwasher not to damage it permanently.

- **Automatic cleaning via the 'Easy Cleaning' key**

Proceed as follows to start the Easy Cleaning procedure.

- Fix the cleaning container (28) onto the cup grid (21)
- Fill the cleaning container (28) with cool water up to the mark indicated
- Connect the milk tube (24) to the coffee machine as described in the "Connecting the milk tube" section and immerse it inside the tray through the relevant compartment, as shown in figure I
- Hold the Easy Cleaning key (35) down for 3 seconds to start complete cleaning of the milk circuit.
- The machine runs a thorough cleaning cycle of the milk tube (24), milk system, milk dispensing nozzle (13).
- The cycle stops on completion.

The milk system (13) and all the components (14, 15, 16, 24) can be washed using detergent suitable for cleaning domestic coffee machines.
If proceeding in this manner, make sure that all components have been rinsed well before re-assembling them (in the case of manual washing) or repeat an 'Easy cleaning' cycle to remove any residual detergent.

**Fast cleaning of the circuits**

- It is possible to start a quick rinse cycle at any moment.
- The key lights up steady at the end of the washing cycle.

**Cleaning the brewing group (22)**

We recommend cleaning the brewing group at least once a week.

- The coffee machine indicates when brewing group cleaning is recommended (steady lit LED 40).
- With the machine on, press the lower part of the door (8) until it is released and slide it out from the top.
- Press the two release clips (44) located on the sides of the infuser (22) and remove it from the machine (Fig.L).
- Wash the brewing group (22) with running water and dry it.
- Thoroughly clean its housing and the duct as well, using the cleaning brush (25) supplied, as in Figure "L".
- Dry thoroughly before re-mounting the various components.
- Refit the service door (8) making sure it is correctly positioned.

Open the door and clean the brewing unit while the machine is on. This is the only way of resetting the counter.
The counter resets at least 10 seconds after opening the various components and LED 40 turns off.

We recommend running a manual circuit cleaning cycle whenever this operation is performed.
Please see paragraph "Manual rinse" for this reason.

Do not wash the brewing group in the dishwasher in order not to damage it permanently.

Coffee powder residue can be found in the brewing group compartment. We recommend thorough cleaning whenever cleaning the brewing group. Use the supplied brush to remove any residue from the brewing group compartment.

Dry all components and internal parts using a dry cloth before closing the side door.

## Descaling

Before performing the descaling cycle, remove possible softener filters inside the tank.

The coffee machine signals when it is necessary to carry out a descaling cycle based on the set water hardness (For the setting of the water hardness, see the "Setting the water hardness" paragraph).
If the LED (41) lights up steadily, it means that a descaling cycle is necessary, so as not to alter the taste of the coffee and damage the machine. However, coffee and further drinks may continue to be dispensed for a limited number of cycles.
If the LED (41) flashes, it means that a descaling cycle is mandatory to proceed with further dispensing of drinks.
To carry out a descaling cycle, proceed as follows:

- Position a container with a capacity of at least 1,4 l under the dispenser (11).
- Make sure that the ***White*** program with white illuminated keys is selected.
- Fill the tank (5), up to the "MAX" level, with a solution of water and descaler in the doses recommended by the manufacturer.
- With the machine ready for use, press the keys (36) and (32) simultaneously for at least 3 seconds. The key (32) flashes with an orange light and the LED (41) has a fixed light for the entire duration of the descaling cycle.
- Stay near the machine for the entire duration of the descaling cycle since you may be required, for example, to fill the tank (5). The entire cycle lasts approximately 30 minutes.
- During the descaling cycle, the machine will take a few breaks to allow the descaler to act effectively. Wait for the end of the cycle.
- The descaling cycle ends when the solution contained in the tank (5) runs out, the key (32) turns white and the led (41) lights up steady.
- Pour clean water into the tank (5) up to the "MAX" level to carry out the rinse cycle, then press the button (32) to start the rinse cycle, the button (32) flashes and the LED (41) lights up steadily for the entire duration of the washing cycle.
- The rinse cycle ends when the keys light up white.

If at the end of descaling the key (32) blinks in white and the led (41) lights up steady, that means that it is necessary to carry out a new descaling cycle since the quantity of descaling solution that has been used was insufficient for a complete cleaning.

Personal injury hazard.

- The descaler contains acids that can irritate the skin and eyes.
- Follow the manufacturer's instructions and safety warnings on the packet scrupulously in the event of contact with skin or eyes.
- Use descaler products recommended by Smeg to prevent damage to the coffee machine.

Any other servicing should be performed by an authorized service representative.

**"Empty system" procedure**

The 'Empty system' procedure is recommended before long periods of non-use and before consulting a maintenance manager.

- Activate the procedure by holding down the key (30) and the key (33) simultaneously for three seconds, the key (31) and the key (33) flash simultaneously.
- The entire quantity of water in the tank is drained through the coffee circuit.
- The pump continues to operate, even intermittently, to also empty the internal water circuits.
- At the end of the procedure the machine switches off.

The empty system procedure takes several minutes and on-off cycles. Do not turn off the machine until the complete procedure is complete.

## What To Do If.....

| Problem | Possible causes | Solution |
|---|---|---|
| The machine doesn't turn on. | Plug not connected. | Connect the plug. |
| | Plug not fully connected. | Fully connect the plug to the machine. |
| | ON-OFF (9) button not pressed. | Press the button to start the machine. |
| | ON-OFF (9) button not working. | Contact an authorised service centre. |
| The machine is on but does not work. | Empty tank alarm or missing (LED 37 on). | Make sure the tank is correctly assembled or fill with water, or rinse to remove any scale residues. |
| | No coffee alarm (LED 38 on). | Pour coffee beans in the relevant container. |
| | Grounds container alarm (LED 39 on). | Empty the grounds container. Note: empty by removing the drawer for at least 15 seconds with the machine on. Alarm 39 flashes to indicate the counter was correctly reset. |
| | Grounds container alarm (LED 39 flashing). | Grounds container not correctly assembled or internal drip tray missing. Reassemble the components. |
| | Generic alarm (LED 40 flashing). | Make sure the brewing group is correctly assembled and the door closed. |
| | Generic alarm (LED 40 on). | Open the access door, remove the brewing unit, check and clean the movement area. If the problem persists, contact an authorised service centre. |
| | Mandatory descaling alarm on (LED 41 flashing). | Run a descaling cycle. |

| Problem | Possible causes | Solution |
|---|---|---|
| The machine stops when dispensing. | Tank removed during dispensing or water under the minimum threshold. | Make sure the tank is correctly assembled or fill with water. |
| | The side door was opened during dispensing. | Close the side door again. |
| Alarm 37 not on but water missing. | Incorrect water reading in the tank due to lime scale inside the tank. | Thoroughly clean and reassemble the tank. Run a descaling cycle if needed. |
| | Water erroneously poured in the tank gap. | Remove the tank and thoroughly dry its compartment. |
| Coffee is not hot. | Cups were not pre-heated. | Heat cups by rinsing them with hot water (Note: the hot water function can be used). |
| Coffee is weak or with little cream. | Coffee too roughly ground. | Turn the knob counter-clockwise to tighten the coffee grinders. Warning: to avoid machine damages, we strongly recommend you turn the knob when the machine is in the grinding phase. |
| | Dispensing when there are no more beans. | Fill the bean container and dispense coffee again. |

| Problem | Possible causes | Solution |
|---|---|---|
| Coffee dispensed slowly or in drips. | Coffee too finely ground. | Turn the knob clockwise to loosen the coffee grinders. Note: some blends require rougher grinding than others. To avoid machine damages, adjust grinding being sure to rotate the knob when the grinders are running. |
| | Dispenser clogged. | Manually clean as indicated in paragraph "Cleaning and Maintenance". |
| A descaling cycle was completed by the machine does not work. | The cycle was not completed. | Make sure the cycle and subsequent rinse are completed. After the first cycle, the machine requires a rinse cycle. Follow the instructions in paragraph "Cleaning and Maintenance". |
| | The tank was not filled to the maximum level during the descaling cycle or during the following rinse cycle. | Fill the tank being sure to empty the container under the dispenser. Press key 32 again to continue. |
| The machine does not turn off. | LED 37 is on indicating no water in the tank. | Fill the tank to let the machine run the final rinse cycle. |
| The machine emitted two beeps and the two button LEDS turned off. | General machine problem. | Contact an authorised service centre. |
| Drawer blocked. | Incorrect machine use. | Turn the machine off and on to return internal parts to their correct positions. |

| Problem | Possible causes | Solution |
|---|---|---|
| All buttons flash simultaneously. | Hydraulic circuit error. | Make sure there is water in the tank and wait for the circuit to reset. The machine automatically returns to its initial position. If the problem persists, contact an authorised service centre. |
| Milk drink not dispensing. | Milk missing | Insert milk in the container and connect the tube. Make sure the tube (24) and its respective connector are well immersed inside the milk kettle. |
| | Tube (24) not correctly hooked to the coffee dispenser (16) | Check correct assembly of the components, consult paragraph "Assembly of the milk tube". |
| | Missing water in the tank. | Fill the tank. |
| | Milk system not positioned correctly. | Check correct assembly of the components, consult the paragraph "Assembly of the milk tube". |
| | Circuit clogged due to the presence of limescale. | Perform the descaling cycle, as indicated in the "Descaling" paragraph. |
| | Clogged components. | Perform an automatic or manual cleaning of the circuit components and milk system. Paragraph "Cleaning and maintenance". |

| Problem | Possible causes | Solution |
|---|---|---|
| The milk comes out splashing from the milk dispensing tube or is poorly foamed. | Components partially clogged or dirty. | Perform an automatic or manual cleaning of the circuit components and milk system. Paragraph "Cleaning and maintenance". |
| | Milk is not at the advised temperature. | Use whole or semi-skimmed milk at fridge temperature (approximately 5°C). If the result is not the desired one yet, try to change the brand of milk. |
| | The tube is not immersed correctly. | Immerse the tube in the milk. Ensure that the tube (24) and its connector are immersed well inside the milk kettle |
| | Components not mounted correctly | Check correct assembly of the components, check paragraph "Components assembly". Contact the assistance service if the problem persists. |
| The machine does not perform the automatic cleaning of the milk circuit | Cleaning cycle not started correctly. | Keep the key 35 pressed for 3 seconds to start the cycle. |
| | Absence of water in the tank. | Fill the tank. |
| The machine dispenses steam instead of milk. | Tube or milk system not mounted correctly | Check correct assembly of the components, check paragraph "Components assembly". |
| | Clogged components | Check the cleaning paragraph. |

Contact local technical support if the problem is not solved or in case of other types of faults.

EN