ASUS NUC 14 Pro/Pro+ Kit/Board/Mini-PC

Technical Product Specification

Regulatory Models: NUC14RVK, NUC14RVH, NUC14RVS, NUC14RVB

February 24'
Revision 1.0

ASUS NUC Boards NUC14RV may contain design defects or errors known as errata that may cause the product to deviate from published specifications. Current characterized errata, if any, are documented in ASUS NUC Board NUC14RV Specification Update.

Revision History

Revision	Revision History	Date
1.0	First release of the ASUS NUC 14 Pro/Pro+ Board/Kit Technical Product Specification	February 2024

Disclaimer

THIS PRODUCT SPECIFICATION APPLIES TO ONLY THE STANDARD ASUS NUC BOARD NUC14RV WITH BIOS IDENTIFIERS RVMTL357.00XX, RVMTLV57.00XX, OR RVRPLR30.00XX.

No part of this manual, including the products and software described in it, may be reproduced, transmitted, transcribed, stored in a retrieval system, or translated into any language in any form or by any means, except documentation kept by the purchaser for backup purposes, without the express written permission of ASUSTeK COMPUTER INC. (“ASUS”).

ASUS PROVIDES THIS MANUAL “AS IS” WITHOUT WARRANTY OF ANY KIND, EITHER EXPRESS OR IMPLIED, INCLUDING BUT NOT LIMITED TO THE IMPLIED WARRANTIES OR CONDITIONS OF MERCHANTABILITY OR FITNESS FOR A PARTICULAR PURPOSE. IN NO EVENT SHALL ASUS, ITS DIRECTORS, OFFICERS, EMPLOYEES OR AGENTS BE LIABLE FOR ANY INDIRECT, SPECIAL, INCIDENTAL, OR CONSEQUENTIAL DAMAGES (INCLUDING DAMAGES FOR LOSS OF PROFITS, LOSS OF BUSINESS, LOSS OF USE OR DATA, INTERRUPTION OF BUSINESS AND THE LIKE), EVEN IF ASUS HAS BEEN ADVISED OF THE POSSIBILITY OF SUCH DAMAGES ARISING FROM ANY DEFECT OR ERROR IN THIS MANUAL OR PRODUCT.

Products and corporate names appearing in this manual may or may not be registered trademarks or copyrights of their respective companies, and are used only for identification or explanation and to the owners’ benefit, without intent to infringe.

SPECIFICATIONS AND INFORMATION CONTAINED IN THIS MANUAL ARE FURNISHED FOR INFORMATIONAL USE ONLY, AND ARE SUBJECT TO CHANGE AT ANY TIME WITHOUT NOTICE, AND SHOULD NOT BE CONSTRUED AS A COMMITMENT BY ASUS. ASUS ASSUMES NO RESPONSIBILITY OR LIABILITY FOR ANY ERRORS OR INACCURACIES THAT MAY APPEAR IN THIS MANUAL, INCLUDING THE PRODUCTS AND SOFTWARE DESCRIBED IN IT.

Copyright © 2024 ASUSTeK COMPUTER INC. All Rights Reserved.

LIMITATION OF LIABILITY

Circumstances may arise where because of a default on ASUS' part or other liability, you are entitled to recover damages from ASUS. In each such instance, regardless of the basis on which you are entitled to claim damages from ASUS, ASUS is liable for no more than damages for bodily injury (including death) and damage to real property and tangible personal property; or any other actual and direct damages resulted from omission or failure of performing legal duties under this Warranty Statement, up to the listed contract price of each product.

ASUS will only be responsible for or indemnify you for loss, damages or claims based in contract, tort or infringement under this Warranty Statement.

This limit also applies to ASUS' suppliers and its reseller. It is the maximum for which ASUS, its suppliers, and your reseller are collectively responsible.

UNDER NO CIRCUMSTANCES IS ASUS LIABLE FOR ANY OF THE FOLLOWING: (1) THIRD-PARTY CLAIMS AGAINST YOU FOR DAMAGES; (2) LOSS OF, OR DAMAGE TO, YOUR RECORDS OR DATA; OR (3) SPECIAL, INCIDENTAL, OR INDIRECT DAMAGES OR FOR ANY ECONOMIC CONSEQUENTIAL DAMAGES (INCLUDING LOST PROFITS OR SAVINGS), EVEN IF ASUS, ITS SUPPLIERS OR YOUR RESELLER IS INFORMED OF THEIR POSSIBILITY.

SERVICE AND SUPPORT

Visit our multi-language website at https://www.asus.com/support/.

Preface

This Technical Product Specification (TPS) specifies the board layout, components, connectors, power and environmental requirements, and the BIOS for ASUS NUC Board/Kits NUC14RV. Some features are only available on certain SKUs.

Intended Audience

The TPS is intended to provide detailed, technical information about ASUS NUC Board, Kit, and Mini PCs NUC14RV and its components to the vendors, system integrators, and other engineers and technicians who need this level of information. It is specifically *not* intended for general audiences.

What This Document Contains

Chapter	Description
1	An overview of the features and specifications of the ASUS NUCNUC14RV
2	The figures, layouts, and physical description of the ASUS NUCNUC14RV Board
3	Detailed descriptions of the features and specifications
4	Technical references and considerations
5	An overview of BIOS features and specifications

Typographical Conventions

This section contains information about the conventions used in this specification. Not all these symbols and abbreviations appear in all specifications of this type.

Notes, Cautions, and Warnings

NOTE

Notes call attention to important information.

CAUTION

Cautions are included to help you avoid damaging hardware or losing data.

Other Common Notation

#	Used after a signal name to identify an active-low signal (such as USBP0#)
GB	Gigabyte (1,073,741,824 bytes)
GB/s	Gigabytes per second
Gb/s	Gigabits per second
KB	Kilobyte (1024 bytes)
Kb	Kilobit (1024 bits)
kb/s	1000 bits per second
MB	Megabyte (1,048,576 bytes)
MB/s	Megabytes per second
Mb	Megabit (1,048,576 bits)
Mb/s	Megabits per second
TDP	Thermal Design Power
xxh	An address or data value ending with a lowercase h indicates a hexadecimal value.
x.x V	Volts. Voltages are DC unless otherwise specified.
x.x A	Amperes.
*	This symbol is used to indicate third-party brands and names that are the property of their respective owners.

Production Identification Information

ASUS NUC Products NUC14RV Identification Information

Product Name	ASUS NUC Board	BIOS Revision
NUC14RVKC3	NUC14RVBC3	RVRPLR30.00xx
NUC14RVHC3		
NUC14RVKU5	NUC14RVBU5	RVMTL357.00xx
NUC14RVHU5		
NUC14RVSU5		
NUC14RVKv5	NUC14RVBv5	RVMTLV57.00xx
NUC14RVHv5		
NUC14RVKU7	NUC14RVBU7	RVMTL357.00xx
NUC14RVHU7		
NUC14RVSU7		
NUC14RVKv7	NUC14RVBv7	RVMTLV57.00xx
NUC14RVHv7		
NUC14RVSU9	NUC14RVBU9	RVMTL357.00xx

Specification Changes or Clarifications

The table below indicates the Specification Changes or Specification Clarifications that apply to the ASUS NUC Board/Kit/Mini PC NUC14RV.

Specification Changes or Clarifications

Date	Type of Change	Description of Changes or Clarifications

Errata

Current characterized errata, if any, are documented in a separate Specification Update. See for the latest documentation.

Online Support

To Find Information About...	Visit this World Wide Web site:
ASUS NUC Board/Kit/Mini PC NUC14RV	https://www.asus.com/displays-desktops/nucs/nuc-mini-pcs/asus-nuc-14-pro/ https://www.asus.com/displays-desktops/nucs/nuc-mini-pcs/asus-nuc-14-pro-plus/
ASUS NUC Board/Kit/Mini PC Support	https://www.asus.com/support/
High level details for ASUS NUC Board/Kit/Mini PC NUC14RV	https://www.asus.com/displays-desktops/nucs/all-series/filter?Category=NUC-Pro
BIOS and driver updates	https://www.asus.com/support/Download-Center/
Tested memory	https://www.asus.com/support/
Integration information	https://www.asus.com/support/
Processor datasheet	https://ark.intel.com
Regulatory documentation	https://www.asus.com/support/

Table of Contents

1 Product Description 15

1.1 Overview 15

1.1.1 Summary of Mini PC SKUs 15

1.1.2 Summary of Standard Kit and Board SKUs 15

1.1.3 Feature Summary Kits 16

2 Product Layout 19

2.1 Board Layout 19

2.1.1 Board Layout (Bottom) 19

2.1.2 Board Layout (Top) 21

2.1.3 Front Panel 22

2.1.4 Back Panel 22

2.1.5 Chassis Expandability Options 23

2.1.6 Block Diagram 24

3 Feature Descriptions 25

3.1 Graphics Subsystem 25

3.1.1 Intel® Arc™ Graphics 25

3.1.2 Intel® Graphics for 14th Gen Intel Processors 26

3.1.3 Display Emulation 26

3.2 SATA Interface 27

3.3 Real-Time Clock Subsystem 27

3.4 LAN Subsystem 28

3.4.1 RJ-45 LAN Connector with Integrated LEDs 28

3.5 Hardware Management Subsystem 29

3.5.1 Fan Monitoring 29

3.5.2 System States and Power States 29

4 Technical Reference 31

4.1 Connectors and Headers 31

4.1.1 Signal Tables for the Connectors and Headers 31

4.2 Mechanical Considerations 40

4.2.1 NUC 14 Pro Chassis Images 40

4.2.2 NUC 14 Pro+ Chassis Images 42

4.2.3 Form Factor 43

4.3 Thermal Considerations 44

4.4 Reliability 45

4.5 Environmental 46

5 Overview of BIOS Features 48

5.1 Introduction 48

5.2 BIOS Updates 48
5.2.1 BIOS Recovery 48
5.3 Boot Options 49
5.3.1 Boot Device Selection During Post 49
5.3.2 Power Button Menu 49
5.4 Hard Disk Drive Password Security Feature 50
5.5 BIOS Security Features 52
5.6 BIOS Error Messages 53

List of Figures

Figure 1. Major Board Components (Bottom) with Pin 1 Indicators 19
Figure 2. Major Board Components (Top) 21
Figure 3. Front Panel Connectors 22
Figure 4. Back Panel Connectors 23
Figure 5. Back Panel Faceplate 23
Figure 6. Block Diagram 24
Figure 7. LAN Connector LED Locations 28
Figure 8. Connection Diagram for Front Panel Header (2.0 mm Pitch) 34
Figure 9. Location of the BIOS Security Jumper 36
Figure 10. Connection Diagram for the Internal Power Supply Connector 39
Figure 11. Tall Chassis Image Front 40
Figure 12. Slim Chassis Image Front 40
Figure 13. Tall Chassis Image Back Panel 41
Figure 14. Slim Chassis Image Back Panel 41
Figure 13. Pro + Chassis Image Front Panel 42
Figure 14. Pro + Chassis Image Back Panel 42
Figure 15. Board Dimensions 43
Figure 16. Board Height Dimensions 44

List of Tables

Table 1. Feature Summary 16
Table 2. Additional Features 18
Table 3. Components Shown in Figure 1 20
Table 4. Components Shown in Figure 2 21
Table 5. LAN Connector LED States 28
Table 6. Systems States 29
Table 7. Wake-up Devices and Events 29
Table 8. SATA Combined Data/Power Header 31
Table 9. Internal USB 2.0 Header (1.25 mm pitch) 31
Table 10. M.2 2280 Module (Mechanical Key M) Connector 32
Table 11. M.2 2242 Module (Mechanical Key M) Connector 33

Table 13. Front Panel Header (2.0 mm Pitch) 34
Table 14. States for a One-Color Power LED 35
Table 15. States for a Dual-Color Power LED 35
Table 16. BIOS Security Jumper Settings 36
Table 17. Fan Header Current Capability 38
Table 18. Internal Power Supply Connector Pins 39
Table 19. Environmental Specifications 46
Table 20. Acceptable Drives/Media Type for BIOS Recovery 48
Table 21. Power Button Menu Options 49
Table 22. Master Key and User Hard Disk Drive Password Functions 50
Table 23. Supervisor and User Password Functions 52
Table 24. BIOS Error Messages 53

1 Product Description

1.1 Overview

1.1.1 Summary of Mini PC SKUs

Product Codes and Ordering information https://www.asus.com/displays-desktops/nucs/all-series/filter?Category=NUC-Pro.

Processor	Chassis	AC Cord (C5)	RAM	Storage	OS
Intel® Core™ Ultra 9 Processor 185H	Pro+	US, EU, JP, or No Cord	2 x 16 GB	1 TB Gen4 NVMe SSD	Win11 Home
Intel® Core™ Ultra 7 Processor 155H	Pro+	US, EU, JP, or No Cord	2 x 16 GB	1 TB Gen4 NVMe SSD	Win11 Home
Intel® Core™ Ultra 7 Processor 155H	Tall	US, EU, UK, or No Cord	2 x 16 GB	1 TB Gen4 NVMe SSD	Win11 Home
Intel® Core™ Ultra 5 Processor 135H	Slim	US, EU, UK, or No Cord	2 x 8 GB	512 GB Gen4 NVMe SSD	Win11 Pro
Intel® Core™ Ultra 5 Processor 125H	Pro+	US, EU, JP, or No Cord	2 x 8 GB	512 GB Gen4 NVMe SSD	Win11 Home
Intel® Core™ Ultra 5 Processor 125H	Tall	US, EU, UK, or No Cord	2 x 8 GB	512 GB Gen4 NVMe SSD	Win11 Home

1.1.2 Summary of Standard Kit and Board SKUs

Product Codes and Ordering information https://www.asus.com/displays-desktops/nucs/all-series/filter?Category=NUC-Pro.

Processor	Chassis	AC Cord (C5)
Intel® Core™ Ultra 9 Processor 185H	Pro+	US, EU, CN, TW, JP, or No Cord
Intel® Core™ Ultra 7 Processor 165H with Intel® vPro® Technology	Tall	US, EU, UK, AU, TW, or No Cord
	Board	N/A
Intel® Core™ Ultra 7 Processor 155H	Pro+	US, EU, CN, TW, JP, or No Cord
	Slim	US, EU, UK, or No Cord
	Tall	US, EU, UK, AU, CN, TW, JP, or No Cord
	Board	N/A
Intel® Core™ Ultra 5 Processor 135H with Intel® vPro® Technology	Tall	US, EU, UK, AU, TW, JP, or No Cord
	Board	N/A
Intel® Core™ Ultra 5 Processor 125H	Pro+	US, EU, CN, TW, JP, or No Cord
	Slim	US, EU, UK, or No Cord
	Tall	US, EU, UK, AU, CN, TW, or No Cord
	Board	N/A
Intel® Core™ 3 Processor 100U	Slim	US, EU, UK, or No Cord
	Tall	US, EU, UK, AU, CN, TW, JP, or No Cord
	Board	

1.1.3 Feature Summary Kits

Table 1 summarizes the major features of ASUS NUC Board, Kit, and Mini PC NUC14RV

Table 1. Feature Summary

Board Dimensions	4.0in by 4.0in (104.1mm by 101.6mm)
Max Chassis Dimensions	Pro Slim Chassis: 117mm by 112mm x 37mm (including feet) Pro Tall Chassis: 117mm x 112mm x 54 mm (including feet) Pro+ Chassis: 144mm x 112mm x 41mm (including feet)
Processor	ASUS NUC Boards, Kits, and Mini PCs NUC14RV Standard products have a soldered-down 14th generation processor from the list below. • Intel® Core™ Ultra 9 185H Processor • Intel® Core™ Ultra 7 165H Processor with Intel® vPro® Technology • Intel® Core™ Ultra 7 155H Processor • Intel® Core™ Ultra 5 135H Processor with Intel® vPro® Technology • Intel® Core™ Ultra 5 125H Processor • Intel® Core™ 3 100U Processor More information about Intel® processors can be found at https://ark.intel.com
Memory	Two 262-pin 1.1 V DDR5 SDRAM Small Outline Dual Inline Memory Module (SO-DIMM) sockets • Support for DDR5 4800/5600 MHz SO-DIMMs • Support for 16 Gb and 24 Gb technology • Support for up to 96 GB of system memory with two SO-DIMMs using 48 GB memory modules • Support for non-ECC memory • Support for 1.1 V JEDEC memory only Note: 2 Gb, 4 Gb, and 8 Gb memory technology (SDRAM Density) is not supported More information about tested memory can be found at https://www.asus.com/support/
Graphics	Integrated graphics support for processors with Intel® Graphics Technology: • Supports up to quad 4K60Hz displays (2 x DP/Type C + 2 x HDMI 2.1 TMDS) • Supports a single 8K60Hz panel, supported by joining two pipes of Displayport (TBT4) over a single port • HDR (High Dynamic Range) support • Four display pipes – supporting blending, color adjustments, scaling, and dithering • Support for HDCP 1.4 and 2.3 • Codecs supported are detailed in Section 3.1 • Supporting Persistent Display Emulation on HDMI ports only
Audio	The processor supports four High-Definition audio streams on four digital ports simultaneously. The processor supports the following audio formats over HDMI* and DisplayPort*: AC-3 Dolby* Digital, Dolby* Digital Plus, DTS-HD*, LPCM, 192 Khz/24 bit, 6 Channel, and Dolby* TrueHD, DTS-HD Master Audio*. More information about software and drivers can be found at https://www.asus.com/support/Download-Center/
Storage	One M.2 PCIe Gen4 connector supporting M.2 22x80 (key type M) for NVMe only One M.2 PCIe Gen4 connector supporting M.2 22x42 (key type M) for NVME only One SATA 6.0 Gb/s combined data and power connector for 2.5 inch HDD (on Tall SKUs)

Communication	Intel® Wi-Fi 6E[1] AX211 (Gig+) M.2 1216 Soldered down module • 802.11ax R2 2x2, both with 160Mhz channel support + Bluetooth v5.3 • Maximum transfer speed up to 2.4 Gbps • Intel® AMT/vPro support on Core i5 vPro and Core i7 vPro SKUs only More information about Intel® wireless products can be found at https://ark.intel.com To obtain drivers visit https://www.asus.com/support/Download-Center/ Gigabit (10/100/1000/2500 Mbps) LAN subsystem using the Intel® i226-LM Gigabit Ethernet Controller (vPro SKUs) and Intel® i226-V Gigabit Ethernet Controller (non-vPro SKUs) • PCIe 3.1 5GT/s support for x1 width (Lane) • Single-port integrated multi-gigabit (up to 2.5G) – standard IEEE 802.3 Ethernet interface for 2500BASE-T, 1000BASE-T, 100BASE-TX, 10BASE-TE connections (IEEE 802.3, 802.3u, 802.3bz, and 802.3ab) • Full wake up support (S4 WOL not supported) • Supports for packets up to 9.5 KB (Jumbo Frames) More information about Intel® Ethernet controllers can be found at https://ark.intel.com
[1] **Thunderbolt™**	2 x Thunderbolt™ ports (back panel) • USB4 compliant • 15W (5V/3A) port bus power • Thunderbolt networking • Protocol support: PD Modes Supported: TBT3, USB4, USB3, DP-alt/MF TBT3 Tx/Rx rates: 40G (2x 20.625), 20G (2x 10.3125) PCI Express Tunneling: 32 Gbps (PCI Express* 3.0 x4 compliant) USB4 Tx/Rx rates: 40G (2x 20), 20G (2x 10) USB3 Native: USB 3.2 Gen 2 x1 (10G) USB3 Tunneling: USB 3.2 Gen 2 x1 (10G) USB2: 480 Mpbs DP1.4a, HBR3 DisplayPort Tunneling: Port 1: 2 streams (~35 Gbps, Thunderbolt 4 certified) Port 2: 2 stream (~35 Gbps, Thunderbolt 4 certified) More information about the location of the Thunderbolt™ ports can be found in Section 2.1.4 later in this document
USB Ports and Headers	[1] 2 x USB 4 ports via Type C/Thunderbolt™ (on back panel, shared with Thunderbolt™ as described above) 3 x USB 3.2 Gen 2 ports (2 front panel and 1 back panel) 1 x USB 2.0 port (1 back panel) 2 x USB 2.0 Headers (internal) More information about the location of the USB ports and headers can be found in Section 2 later in this document More information about the pinout of the USB ports and headers can be found in Section 4.1 later in this document
TPM	Intel® Platform Trust Technology (Intel® PTT) supported on all SKUs - TPM 2.0 Compliant More information about TPM and Intel® PTT is available on https://www.asus.com/support/
Power	AC Adapter • Core 3 ships with a 90W 19V adapter • Core Ultra 5, Core Ultra 7 ships with a 120W 19V adapter • Core Ultra 9 ships with a 150W 19.5V adapter Internal Power Header • 4-pos/dual row (2x2) right-angled header Power Input

	• 12V_{DC} to 20V_{DC} +/- 5% with DC voltage protection
Operating Temperatures	ASUS BIOS provides options to select an External Ambient Temperature Tolerance. Users can select 0-35C, 0-40C, or User Defined. Each option impacts system power, performance, and cooling settings.
BIOS	ASUS BIOS resident in the Serial Peripheral Interface (SPI) Flash device Support for Advanced Configuration and Power Interface (ACPI), Plug and Play, and System Management BIOS (SMBIOS)
Operating System (Mini PCs only)	ASUS NUC Mini PCs NUC14RV ship with Windows 11 Pro 64-bit, Windows 11 Home Plus 64-bit, or Windows 11 Home preinstalled More information about available ASUS NUC Mini PCs NUC14RV can be found in Section 1.1.1 Summary of Mini PC SKUs.
Hardware Monitor Subsystem	Hardware monitoring subsystem including: Voltage sense to detect out of range power supply voltages Thermal sense to detect out of range thermal values One processor fan header Fan sense input used to monitor fan activity Fan speed control

[1] May not be available in all countries

Table 2. Additional Features

Chassis Expandability and Replaceable Lids	ASUS NUC Mini PCs and Kits NUC14RV ship with a replaceable lid that allows you to replace the cover of the NUC with a full range of cosmetic and functional lids The Tall chassis provides a back-panel expansion bay. More information about chassis expandability options can be found in Section 2.1.5 later in this document
HDMI CEC API	Built-in support for HDMI CEC is available on both HDMI ports, which may be enabled in the BIOS for display power control, as well as via an API supporting other HDMI CEC functions.
Sustained Operation	Qualified for 24x7 sustained operation
Auto RTC Reset	A Real-Time Clock (RTC) reset will be triggered after three consecutive unsuccessful boot attempts.
Delayed AC Start	Short delay after AC power is applied before unit is ready to power on to protect the system against voltage fluctuations in environments where multiple devices are being powered on simultaneously
Reflectivity	All surfaces meet 20GE (20 Gloss Level/Gloss Units) of shininess by measurement of Glanz
Kensington Security Slot	Available on the left side of the chassis when viewed from the front on the Pro and on the rear of the chassis on the Pro+
Cable Locking Arm	ASUS NUC Pro Mini PCs and Kits NUC14RV ship with a cable locking arm on the back panel of the chassis. The cable locking arm reduces stress on the power adapter cable in certain positions and prevents unintended losses of power
VESA Mount	ASUS NUC Mini PCs and Kits NUC14RV ship with a VESA mount and screws for attaching the system to compatible screens and monitors

2 Product Layout

2.1 Board Layout

2.1.1 Board Layout (Bottom)

Figure 1 shows the location of the major components on the bottom of ASUS NUC Board NUC14RV.

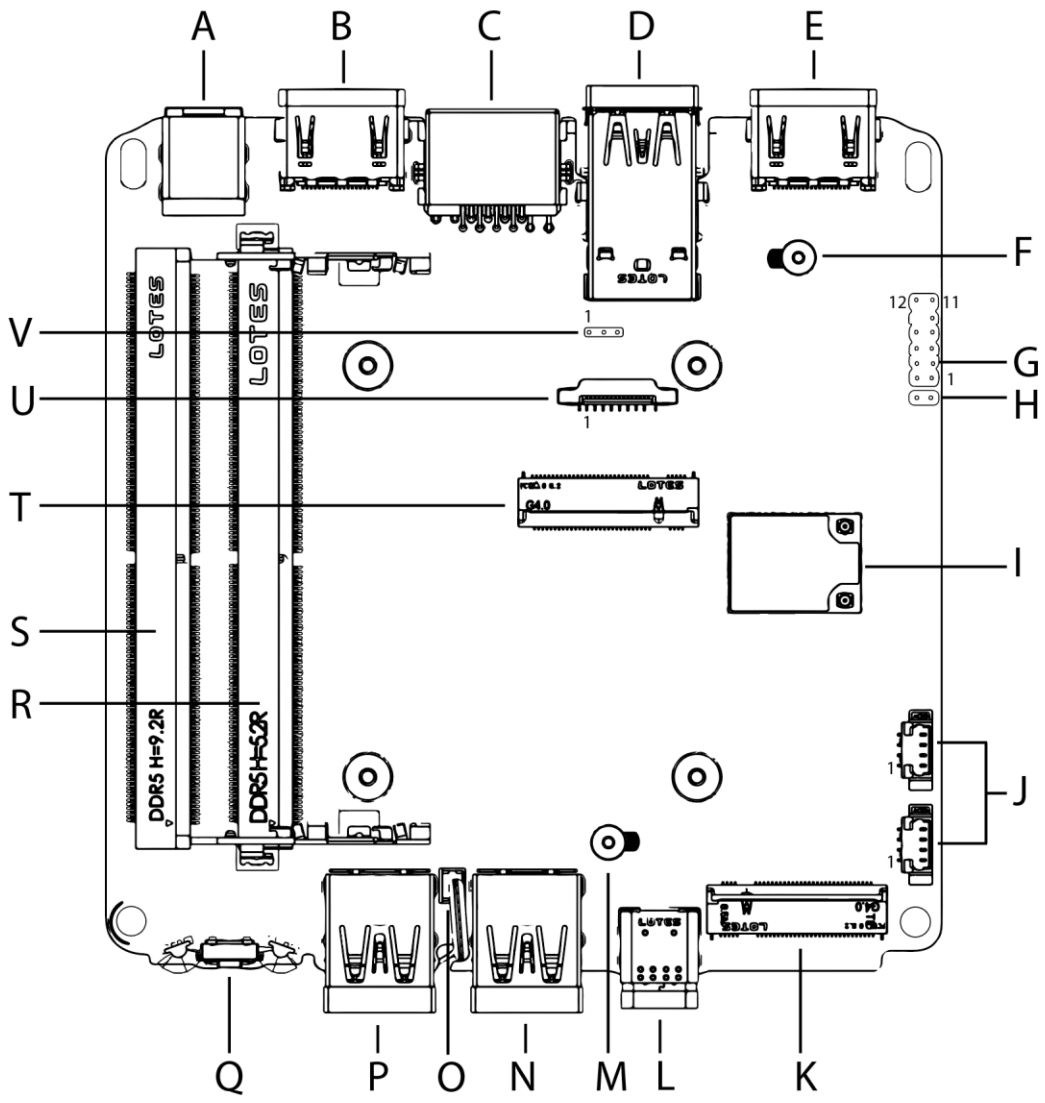

Figure 1. Major Board Components (Bottom) with Pin 1 Indicators

Table 3. Components Shown in Figure 1

Item from Figure 1	Description
A	12-20 V DC Input Jack
B	HDMI 2.1 TMDS Port 1 with Built-In CEC Support
C	LAN Connector
D	Back Panel USB 3.2 Gen 2 / USB 2.0
E	HDMI 2.1 TMDS Port 2 with Built-In CEC Support
F	M.2 Retention BIOS Security Header
G	Front Panel Header
H	Intel® Management Engine BIOS Extension (Intel® MEBX) Reset Header
I	M.2 1216 WiFi
J	USB 2.0 Headers
K	M.2 2280 Module Connector (Key Type M) (NVMe Only)
L	USB 3.2 Gen2x2 Type-C (20Gbps)
M	M.2 Retention BIOS Security Header
N	Front Panel USB 3.2 Gen 2
O	CMOS Battery Connector
P	Front Panel USB 3.2 Gen 2
Q	Front Panel Power Button
R	DDR4 SO-DIMM 0 Socket
S	DDR4 SO-DIMM 1 Socket
T	M.2 2242 Module Connector (Key Type M) (NVMe Only)
U	Combined Data/Power SATA Connector – Select SKUs only
V	BIOS Security Header

2.1.2 Board Layout (Top)

Figure 2 shows the location of the major components on the bottom-side of ASUS NUC Board NUC14RV.

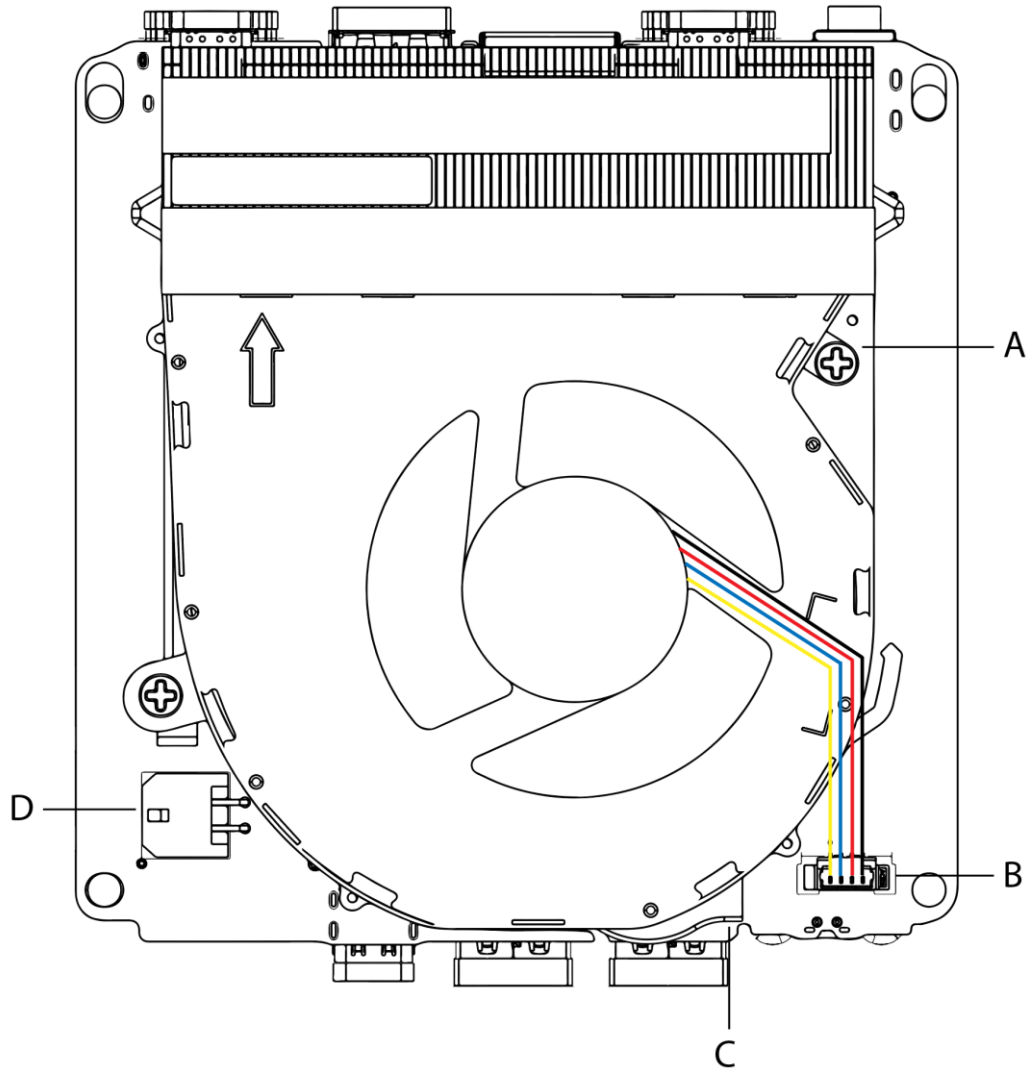

Figure 2. Major Board Components (Top)

Table 4. Components Shown in Figure 2

Item from Figure 2	Description
A	Fan and Thermal Solution
B	Fan Header
C	CMOS Battery
D	12-20 V DC 2x2 Power Connector

2.1.3 Front Panel

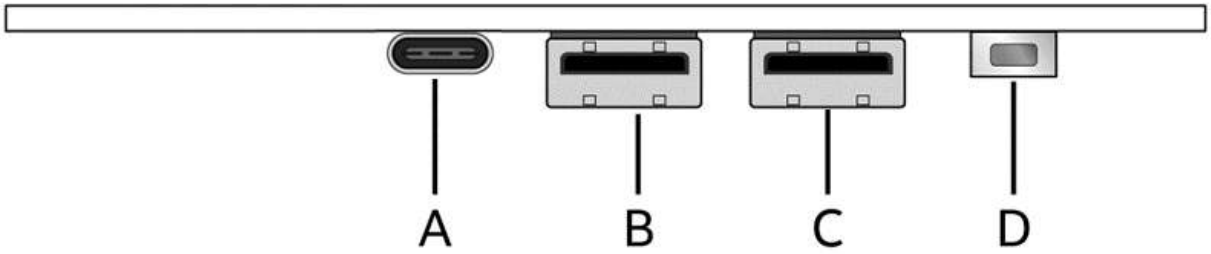

Item	Description
A	USB 3.2 Gen 2x2 Type-C Port (20Gbps)
B	USB 3.2 Gen 2 Port (black)
C	USB 3.2 Gen 2 Port (black)
D	Front Panel Power Button

Figure 3. Front Panel Connectors

2.1.4 Back Panel

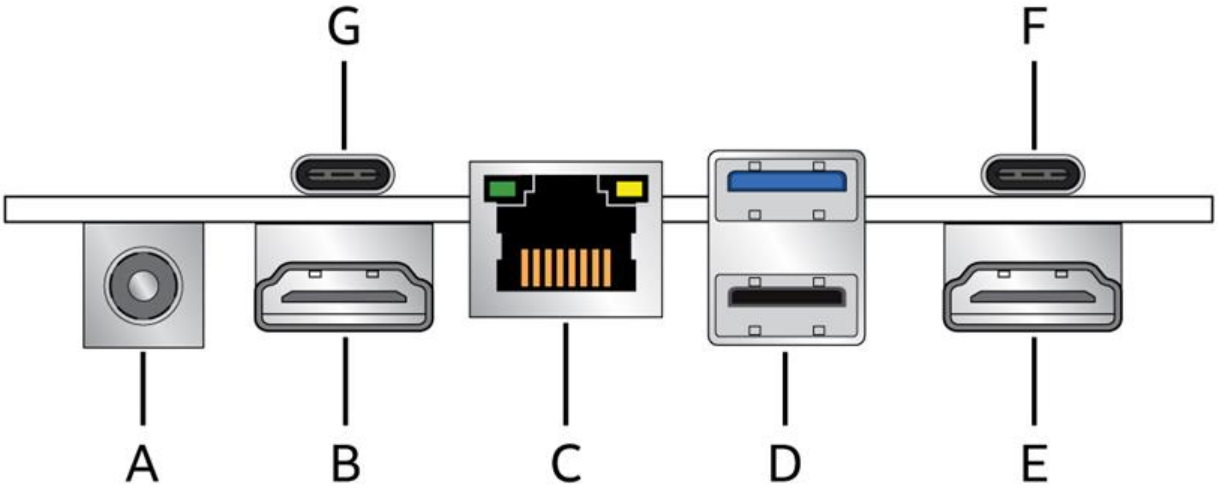

Item	Description
A	12-20 V DC Input Jack
B	HDMI 2.1 TMDS Port 1
C	LAN Connector
D	USB 3.2 Gen 2 Port (blue) / USB 2.0 Port (black)
E	HDMI 2.1 TMDS Port 2
†F	†Thunderbolt™ Port 2
†G	†Thunderbolt™ Port 1

Figure 4. Back Panel Connectors

2.1.5 Chassis Expandability Options

The tall chassis provides a back-panel expansion bay that includes a removeable faceplate for when no ports are installed and an internal removeable bracket that is pre-punched for attaching one DB9 port. Some 3rd party expandability dongles are available from https://gorite.com and a specification is available for the design of 3rd party add in cards.

Figure 5. Back Panel Faceplate

2.1.6 Block Diagram

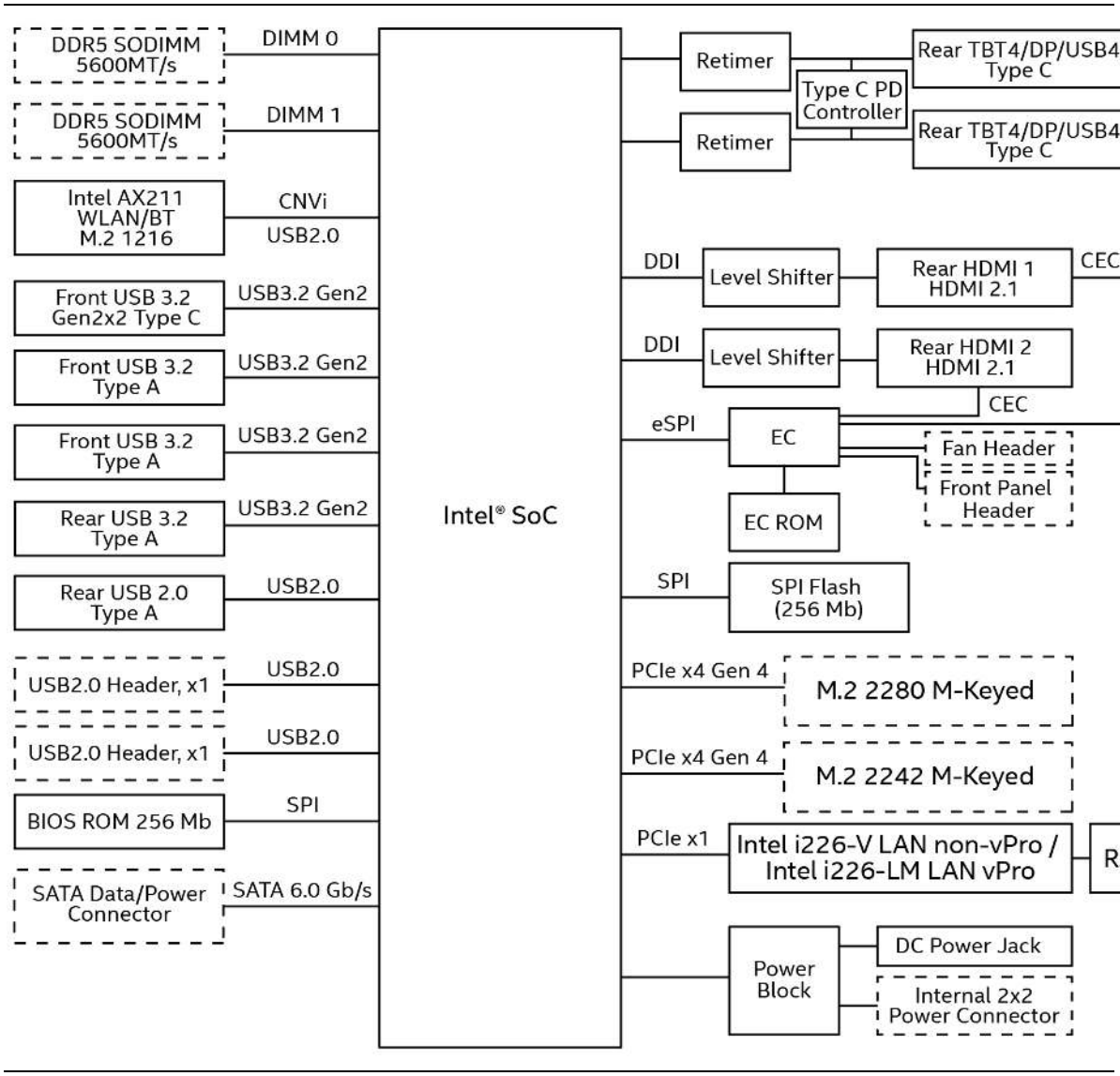

Figure 6. Block Diagram

3 Feature Descriptions

3.1 Graphics Subsystem

ASUS NUC Boards NUC14RV with Core™ Ultra Processors (Core™ Ultra 9/7/5) support Intel® Arc™ Graphics while the NUC14RV with Core™ 3 Processor support Intel® Graphics.

3.1.1 Intel® Arc™ Graphics

Intel® Arc™ Graphics implements a high-performance and low-power HW acceleration for video decoding operations for multiple video codecs.

The HW decode is exposed by the graphics driver using the following APIs:

- Direct3D* 9 Video API (DXVA2), Direct3D11 Video API, Direct3D12 Video API, Intel Media SDK, MFT (Media Foundation Transform) filters, and Intel VA API.
- Intel® Arc™ Graphics supports full HW accelerated video decoding for AVC/HEVC/VP9/JPEG and AVI.

Intel® 14th Gen Processors implements a low-power low-latency fixed function encoder and high-quality customizable encoder with hardware assisted motion estimation engine which supports AVC, MPEG-2, HEVC, and VP9. The HW encode is exposed by the graphics driver using the following APIs:

- Intel® Media SDK and MFT (Media Foundation Transform) filters.
- Intel® Arc™ Graphics supports full HW accelerated video encoding for AVC/HEVC/VP9/AV1 and JPEG.

There is hardware support for image processing functions such as De-interlacing, Film cadence detection, Advanced Video Scaler (AVS), detail enhancement, gamut compression, HD adaptive contrast enhancement, skin tone enhancement, total color control, Chroma de-noise, SFC (Scalar and Format Conversion), memory compression, Localized Adaptive Contrast Enhancement (LACE), spatial de-noise, Out-Of-Loop De-blocking (from AVC decoder), and 16 bpc support for de-noise/de-mosaic. The HW video processing is exposed by the graphics driver using the following APIs:

- Direct3D* 9 Video API (DXVA2), Direct3D* 11 Video API, OneVPL, MFT (Media Foundation Transform) filters, Intel® Graphics Control Library, and Intel VA API.

Intel® 13th Gen Processors support the following transcoding features:

- High performance high quality flexible encoder for video editing and video archiving, lower-power low latency encoder for video conferencing, wireless display, and gam streaming, lossless memory compression for media engine to reduce media power, high-quality Advanced Video Scaler (AVS) and low power Scaler and Format Converter.

Notes:

1. Resolution support is subject to memory bandwidth availability
2. Single 8K at 60 Hz display, supported by monitors that accept dual DP input for tiled screen

3.1.2 Intel® Graphics for 14th Gen Intel Processors

Intel® Graphics for 14th Gen Intel Processors features the following:

- DirectX* 12.1 support
- OpenGL* 4.6 support
- Max HDMI resolution 4096x2304 at 60Hz
- Max DP resolution 7680x4320 at 60Hz†
- OpenCL* 3.0 support

3.1.3 Display Emulation

Display emulation is supported using the HDMI ports so that the system may be remotely accessed in a headless configuration or be capable of tolerating display connectivity interruptions without the operating system redetecting and rearranging the overall display layout. The display emulation feature may be enabled in BIOS Setup with the following checkboxes:

- "Virtual display emulation": provides a 1280x1024 virtual display when no displays are connected to the system and provides an additional 1280x1024 virtual display if one display is attached to the system. If two displays are attached to the HDMI ports these displays will be enabled and no virtual displays will be provided.
- "Persistent display emulation": emulates that both displays are always connected to the system no matter their actual connection status. The EDID information from each display will remain programmed through S3, S4, S5 and G3 power states until the feature is disabled.
    - When "Persistent display emulation" is enabled another drop-down menu ("Inconsistent Display Device") will become visible that allows the user to select the behavior of the system when the display device EDID is inconsistent with the EDID stored by the system.
        - "Block boot" (default selection): the BIOS will display a warning message with options and will wait indefinitely for a user selection.
        - "Countdown": the BIOS will display a warning message with options and will wait 10 seconds before booting.

NOTE

When using "Persistent display emulation" it would be expected behavior for the system not to properly drive displays different than those connected when the feature was enabled, as the EDID parameters of the initially connected displays are still being driven by the system. In order to retrain the system for different displays, the persistent display emulation feature must be disabled in the BIOS, the system rebooted, and then the persistent display emulation feature must be reenabled.

3.2 SATA Interface

The board provides the following SATA interfaces:

- One SATA 6.0 Gb/s combined Data and Power connector
  - Accepts up to 7mm in height 2.5" drives

The PCH provides independent SATA ports with a theoretical maximum transfer rate of 6 Gb/s. A point-to-point interface is used for host to device connections.

3.3 Real-Time Clock Subsystem

A coin-cell battery (CR2032) powers the real-time clock and CMOS memory. When the computer is not plugged into a wall socket, the battery has an estimated life of three years. When the computer is plugged in, the standby current from the power supply extends the life of the battery. The clock is accurate to ± 13 minutes/year at 25 °C with 3.3 VSB applied via the power supply 5 V STBY rail.

NOTE

If the battery and AC power fail, date and time values will be reset and the user will be notified during the POST.

When the voltage drops below a certain level, the BIOS Setup program settings stored in CMOS RAM (for example, the date and time) might not be accurate. Replace the battery with an equivalent one. Figure 2 on page 21 shows the location of the battery.

System can power on from G3/AC power loss state without the Real-Time Clock battery.

3.4 LAN Subsystem

3.4.1 RJ-45 LAN Connector with Integrated LEDs

Two LEDs are built into the RJ-45 LAN connector (shown in Figure 7).

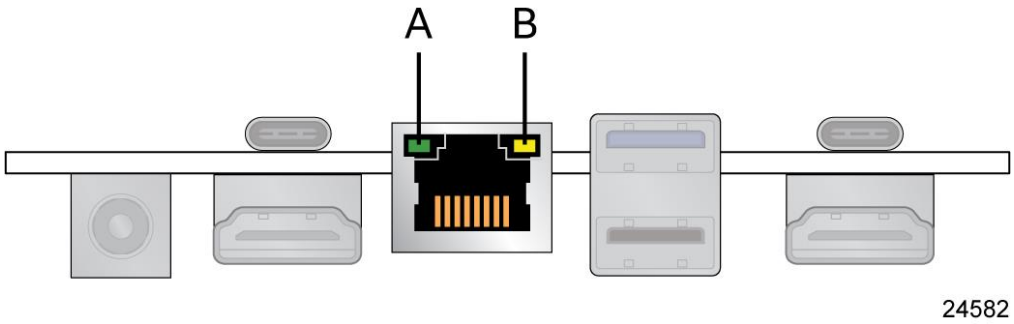

Item	Description
A	Link LED (Green)
B	Data Rate LED (Green/Yellow)

Figure 7. LAN Connector LED Locations

Table 5 describes the LED states when the board is powered up and the LAN subsystem is operating.

Table 5. LAN Connector LED States

LED	LED Color	LED State	Condition
Link	Green	Off	LAN link is not established
		Solid	LAN link is established
		Blinking	LAN activity is occurring
Data Rate	Green/Yellow	Off	10/100 Mb/s data rate is selected
		Yellow	1000 Mb/s data rate is selected
		Green	2500 Mb/s data rate is selected

3.5 Hardware Management Subsystem

3.5.1 Fan Monitoring

Fan monitoring can be implemented using third-party software.

3.5.2 System States and Power States

Table 6 describes the ACPI states supported by the processor.

Table 6. Systems States

State	Description
G0/S0/C0	**Full On:** CPU operating. Individual devices may be shut to save power. The different CPU operating levels are defined by Cx states.
GO/S0/Cx	**Cx State:** CPU manages C-states by itself and can be in lower power states.
G1	**Suspend-To-RAM (STR):** The system context is maintained in system DRAM, but power is shut to non-critical circuits. Memory is retained and refreshes continue. All external clocks are shut off; RTC clock and international oscillator clocks are still toggling.
G1/S4	**Suspend-To-Disk (STD):** The context of the system is maintained on the disk. All power is then shut to the system except to the logic required to resume. Externally appears the same as S5 but may have different wake events.
G2/S5	**Soft Off:** System context not maintained. All power is shut except for the logic required to restart. A full boot is required when waking.
G3	**Mechanical Off:** System context not maintained. All power shut except for the RTC. No "Wake" events are possible because the system does not have any power. This state occurs if the user removes the batteries, turns off a mechanical switch, or if the system power supply is at a level that is insufficient to power the "waking" logic.

3.5.2.1 Wake-up Devices and Events

Table 7 lists the devices or specific events that can wake the computer from specific states.

Table 7. Wake-up Devices and Events

Devices/events that wake up the system...	...from this sleep state	Comments
Power switch	S0iX, S4, S5[1]	
RTC alarm	S0iX, S4, S5[1]	Option for monitor to remain in sleep state
LAN	S0iX, S5[1, 3, 4]	"S5 WOL after G3" is supported; monitor to remain in sleep state
WIFI	S0iX	
Bluetooth	S0iX	
USB	S0iX, S4, S5[1, 2, 3]	Wake S4, S5 controlled by BIOS option (not after G3)
PCIe	S0iX, S4[1]	Via WAKE; monitor to remain in sleep state
HDMI CEC	S0iX, S4, S5[1]	Wake S4, S5 controlled by BIOS option

Notes:

1. S4 implies operating system support only.
2. Will not wake from Deep S4/S5. USB S4/S5 Power is controlled by BIOS. USB S5 wake is controlled by BIOS. USB S4 wake is controlled by OS driver, not just BIOS option.
3. Windows Fast startup will block wake from LAN and USB from S5.
4. WoL from S4 via Magic Packet is not supported.

NOTE

The use of these wake-up events from an ACPI state requires an operating system that provides full ACPI support. In addition, software, drivers, and peripherals must fully support ACPI wake events.

4 Technical Reference

4.1 Connectors and Headers

CAUTION

Only the following connectors and headers have overcurrent protection: back panel USB Type A and Type C, front panel USB, internal USB headers, internal power header, and DC Vin jack.

All other connectors and headers are not overcurrent protected and should connect only to devices inside the computer's chassis, such as fans and internal peripherals. Do not use these connectors or headers to power devices external to the computer's chassis. A fault in the load presented by the external devices could cause damage to the computer, the power cable, and the external devices themselves.

Furthermore, improper connection of USB header single wire connectors may eventually overload the overcurrent protection and cause damage to the board.

4.1.1 Signal Tables for the Connectors and Headers

Table 8. SATA Combined Data/Power Header

Pin	Signal Name	Pin	Signal Name
1	+5V (2A total for pins 1, 2, 3, 4 (0.5A per pin))	2	+5V (2A total for pins 1, 2, 3, 4 (0.5A per pin))
3	+5V (2A total for pins 1, 2, 3, 4 (0.5A per pin))	4	+5V (2A total for pins 1, 2, 3, 4 (0.5A per pin))
5	NC	6	NC
7	NC	8	DEVSLP
9	GND	10	GND
11	SATA_RX_P	12	SATA_RX_N
13	GND	14	SATA_TX_N
15	SATA_TX_P	16	GND

Connector is vertical 0.5mm contact pitch ZIF FPC/FFC with lock

Table 9. Internal USB 2.0 Header (1.25 mm pitch)

Pin	Signal Name
1	5 V[1]
2	D -
3	D +
4	GND

[1] The two USB 2.0 headers on the board can deliver 1A per port.

Connector is Molex part number 53398-0471, 1.25mm Pitch PicoBlade* Header, Surface Mount, Vertical, Lead-Free, 4 Circuits.

Table 10. M.2 2280 Module (Mechanical Key M) Connector

Pin	Signal Name	Pin	Signal Name
74	3.3V (4A total for pins 74, 72, 70, 18, 16, 14, 12, 4, 2 (0.5A per pin))	75	GND
72	3.3V (4A total for pins 74, 72, 70, 18, 16, 14, 12, 4, 2 (0.5A per pin))	73	GND
70	3.3V (4A total for pins 74, 72, 70, 18, 16, 14, 12, 4, 2 (0.5A per pin))	71	GND
68	SUSCLK(32kHz) (O)(0/3.3V)	69	PEDET (NC-PCIe)
66	Connector Key	67	N/C
64	Connector Key	65	Connector Key
62	Connector Key	63	Connector Key
60	Connector Key	61	Connector Key
58	N/C	59	Connector Key
56	N/C	57	GND
54	PEWAKE# (I/O)(0/3.3V) or N/C	55	REFCLKP
52	CLKREQ# (I/O)(0/3.3V) or N/C	53	REFCLKN
50	PERST# (O)(0/3.3V) or N/C	51	GND
48	N/C	49	PETp0
46	N/C	47	PETn0
44	N/C	45	GND
42	N/C	43	PERp0
40	N/C	41	PERn0
38	DEVSLP (O)	39	GND
36	N/C	37	PETp1
34	N/C	35	PETn1
32	N/C	33	GND
30	N/C	31	PERp1
28	N/C	29	PERn1
26	N/C	27	GND
24	N/C	25	PETp2
22	N/C	23	PETn2
20	N/C	21	GND
18	3.3V (4A total for pins 74, 72, 70, 18, 16, 14, 12, 4, 2 (0.5A per pin))	19	PERp2
16	3.3V (4A total for pins 74, 72, 70, 18, 16, 14, 12, 4, 2 (0.5A per pin))	17	PERn2
14	3.3V (4A total for pins 74, 72, 70, 18, 16, 14, 12, 4, 2 (0.5A per pin))	15	GND
12	3.3V (4A total for pins 74, 72, 70, 18, 16, 14, 12, 4, 2 (0.5A per pin))	13	PETp3
10	DAS/DSS# (I/O)/LED1# (I)(0/3.3V)	11	PETn3
8	N/C	9	GND
6	N/C	7	PERp3
4	3.3V (4A total for pins 74, 72, 70, 18, 16, 14, 12, 4, 2 (0.5A per pin))	5	PERn3
2	3.3V (4A total for pins 74, 72, 70, 18, 16, 14, 12, 4, 2 (0.5A per pin))	3	GND
		1	GND

Table 11. M.2 2242 Module (Mechanical Key M) Connector

Pin	Signal Name	Pin	Signal Name
74	3.3V (4A total for pins 74, 72, 70, 18, 16, 14, 12, 4, 2 (0.5A per pin))	75	GND
72	3.3V (4A total for pins 74, 72, 70, 18, 16, 14, 12, 4, 2 (0.5A per pin))	73	GND
70	3.3V (4A total for pins 74, 72, 70, 18, 16, 14, 12, 4, 2 (0.5A per pin))	71	GND
68	SUSCLK(32kHz) (O)(0/3.3V)	69	PEDET (NC-PCIe)
66	Connector Key	67	N/C
64	Connector Key	65	Connector Key
62	Connector Key	63	Connector Key
60	Connector Key	61	Connector Key
58	N/C	59	Connector Key
56	N/C	57	GND
54	PEWAKE# (I/O)(0/3.3V) or N/C	55	REFCLKP
52	CLKREQ# (I/O)(0/3.3V) or N/C	53	REFCLKN
50	PERST# (O)(0/3.3V) or N/C	51	GND
48	N/C	49	PETp0
46	N/C	47	PETn0
44	N/C	45	GND
42	N/C	43	PERp0
40	N/C	41	PERn0
38	DEVSLP (O)	39	GND
36	N/C	37	PETp1
34	N/C	35	PETn1
32	N/C	33	GND
30	N/C	31	PERp1
28	N/C	29	PERn1
26	N/C	27	GND
24	N/C	25	PETp2
22	N/C	23	PETn2
20	N/C	21	GND
18	3.3V (4A total for pins 74, 72, 70, 18, 16, 14, 12, 4, 2 (0.5A per pin))	19	PERp2
16	3.3V (4A total for pins 74, 72, 70, 18, 16, 14, 12, 4, 2 (0.5A per pin))	17	PERn2
14	3.3V (4A total for pins 74, 72, 70, 18, 16, 14, 12, 4, 2 (0.5A per pin))	15	GND
12	3.3V (4A total for pins 74, 72, 70, 18, 16, 14, 12, 4, 2 (0.5A per pin))	13	PETp3
10	DAS/DSS# (I/O)/LED1# (I)(0/3.3V)	11	PETn3
8	N/C	9	GND
6	N/C	7	PERp3
4	3.3V (4A total for pins 74, 72, 70, 18, 16, 14, 12, 4, 2 (0.5A per pin))	5	PERn3
2	3.3V (4A total for pins 74, 72, 70, 18, 16, 14, 12, 4, 2 (0.5A per pin))	3	GND
		1	GND

4.1.1.1 Front Panel Header (2.0 mm Pitch)

This section describes the functions of the front panel header. Table 12 lists the signal names of the front panel header. Figure 8 is a connection diagram for the front panel header.

Table 12. Front Panel Header (2.0 mm Pitch)

Pin	Signal Name	Description	Pin	Signal Name	Description
1	HDD_POWER_LED	Pull-up 750Ω to +5V	2	POWER_LED_MAIN	[Out] Front panel LED (main color) Pull-up 300Ω to +5V
3	HDD_LED#	[Out] HDD activity LED	4	POWER_LED_ALT	[Out] Front panel LED (alt color)
5	GROUND	Ground	6	POWER_SWITCH#	[In] Power switch
7	RESET_SWITCH#	[In] Reset switch	8	GROUND	Ground
9	+5V_DC (1A) (Vcc)	VCC5 (1A current rating)	10	Key	No pin
11	5Vsby (2A)	5VSB (2A current rating)	12	3.3Vsby (1A)	3VSB (1A current rating)

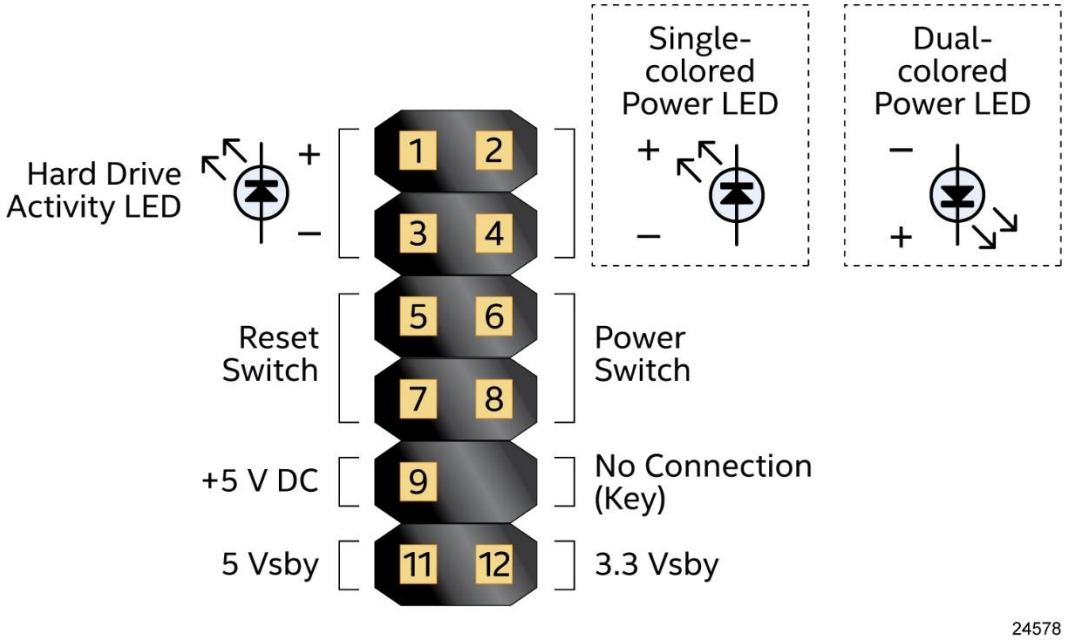

Figure 8. Connection Diagram for Front Panel Header (2.0 mm Pitch)

4.1.1.1.1 Hard Drive Activity LED Header

Pins 1 and 3 can be connected to an LED to provide a visual indicator that data is being read from or written to a hard drive. Proper LED function requires a SATA hard drive or optical drive connected to an onboard SATA connector.

4.1.1.1.2 Reset Switch Header

Pins 5 and 7 can be connected to a momentary single pole, single throw (SPST) type switch that is normally open. When the switch is closed, the board resets and runs the POST.

4.1.1.1.3 Power/Sleep LED Header

Pins 2 and 4 can be connected to a one- or two-color LED. Table 13 and Table 14 show the possible LED states.

Table 13. States for a One-Color Power LED

LED State	Description
Off	Power off
Blinking	Standby
Steady	Normal operation

Table 14. States for a Dual-Color Power LED

LED State	Description
Off	Power off
Blinking (white)	Standby
Steady (white)	Normal operation

NOTE

The LED behavior shown in Table 13 is default – other patterns may be set via BIOS setup.

4.1.1.1.4 Power Switch Header

Pins 6 and 8 can be connected to a front panel momentary-contact power switch. The switch must pull the SW_ON# pin to ground for at least 50 ms to signal the power supply to switch on or off (the time requirement is due to internal debounce circuitry on the board). At least two seconds must pass before the power supply will recognize another on/off signal.

4.1.1.2 BIOS Security Jumper

CAUTION

Do not move a jumper with the power on. Always turn off the power and unplug the power cord from the computer before changing a jumper setting. Otherwise, the board could be damaged.

Figure 9 shows the location of the BIOS Security Jumper. The 3-pin jumper determines the BIOS Security program's mode.

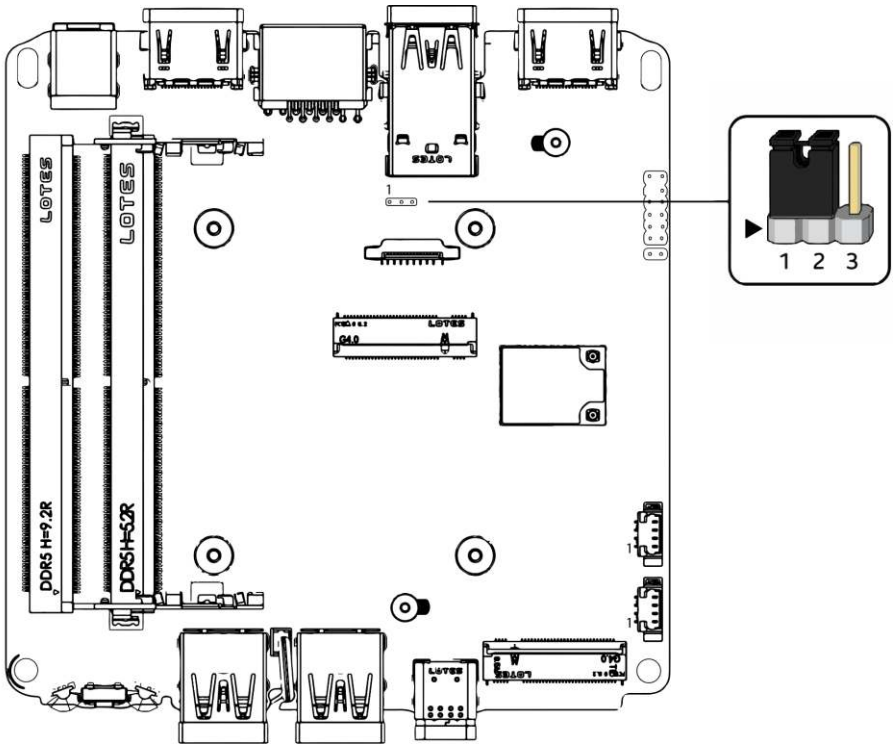

Figure 9. Location of the BIOS Security Jumper

Table 15 describes the jumper settings for the three modes: normal, lockdown, and configuration.

Table 15. BIOS Security Jumper Settings

Function/Mode	Jumper Setting	Configuration
Normal	1-2	The BIOS uses current configuration information and passwords for booting.
Lockdown	2-3	The BIOS uses current configuration information and passwords for booting, except: • All POST Hotkeys are suppressed (prompts are not displayed and keys are not accepted. For example, F2 for Setup, F10 for the Boot Menu). • Power Button Menu is not available (see Section 5.3.2 Power Button Menu). BIOS updates are not available except for automatic Recovery due to flash corruption.
Configuration	None	BIOS Recovery Update process if a matching *.bio file is found. Recovery Update can be cancelled by pressing the Esc key. If the Recovery Update was cancelled or a matching *.bio file was not found, a Config Menu will be displayed. The Config Menu consists of the following (followed by the Power Button Menu selections): [1] Suppress this menu until the BIOS Security Jumper is replaced. [2] Clear BIOS User and Supervisor Passwords. [3] Reset Intel® AMT to default factory settings. [4] Clear Trusted Platform Module. **WARNING!** Data encrypted with the TPM will no longer be accessible if the TPM is cleared. [F2] Intel® Visual BIOS. [F4] BIOS Recovery. See Section 5.3.2 Power Button Menu

4.1.1.3 Intel® Management Engine BIOS Extension (Intel® MEBX) Reset Header

The Intel® MEBX reset header (see Figure 1) allows you to reset the CMOS values to the factory defaults in situations when the system may have become unresponsive, such as after a failed BIOS update. It achieves this by placing a low on the reset pin of the Real Time Clock (RTC).

Momentarily shorting pins 1 and 2 with a jumper will accomplish reset CMOS values to default.

CAUTION *Always turn off the power and unplug the power cord from the computer before installing an MEBX reset jumper. The jumper must be removed before reapplying power. The system must be allowed to reach end of POST before reset is complete. Otherwise, the board could be damaged.*

NOTE *After using the MEBX Reset, a "CMOS battery failure" warning will occur during the next POST. This is expected and does not indicate a component failure.*

CAUTION *Care must be taken to avoid inadvertent shorting of the bottom cover screw to the header during bottom cover reassembly. Assemble the bottom cover before reapplying power to the system.*

4.1.1.4 Fan Header Current Capability

Table 16 lists the current capability of the fan headers.

Table 16. Fan Header Current Capability

Fan Header	Maximum Available Current
Processor fan	1 A

4.1.1.5 Power Supply Connectors

NOTE *External power voltage, 12-20 (±5%) V DC, is dependent on the type of power supply used. System power requirements will depend on actual system configurations chosen by the integrator, as well as end user expansion preferences. It is the system integrator's responsibility to ensure an appropriate power budget for the system configuration is properly assessed based on the system-level components chosen.*

CAUTION

There is no isolation circuitry between the external DC jack and the internal 2 x 2 power connector. It is the system integrator's responsibility to ensure no more than one power supply unit is or can be attached to the board at any time and to ensure the external DC jack is covered if the internal 2 x 2 power connector is to be used. Simultaneous connection of both external and internal power supply units could result in potential damage to the board, power supplies, or other hardware.

The board has the following power supply connectors:

- **External Power Supply** – the board can be powered through a 12-20 V DC connector on the back panel. The back-panel DC connector is compatible with a 5.5 mm/OD (outer diameter) and 2.5 mm/ID (inner diameter) plug, where the inner contact is +12-20 V DC and the shell is GND. The maximum current rating is 10 A.
- **Internal Power Supply** – the board can alternatively be powered via the internal 12-20 V DC 2 x 2 power connector, where pins 1 and 2 are +12-20 V DC and pins 3 and 4 are GND. The maximum current rating is 10 A (5A per pins 1 and 2).

  The connector used is Molex Micro-Fit (3mm pitch), right-angled, 4-pos/dual row (2x2).

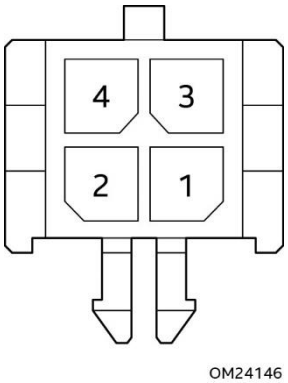

Table 17. Internal Power Supply Connector Pins

Pins	Signal Name
1,2	+12-20V
3,4	GND

Figure 10. Connection Diagram for the Internal Power Supply Connector

4.2 Mechanical Considerations

4.2.1 NUC 14 Pro Chassis Images

Figure 11. Tall Chassis Image Front

Figure 12. Slim Chassis Image Front

Figure 13. Tall Chassis Image Back Panel

Figure 14. Slim Chassis Image Back Panel

4.2.2 NUC 14 Pro+ Chassis Images

Figure 15. Pro + Chassis Image Front Panel

Figure 16. Pro + Chassis Image Back Panel

4.2.3 Form Factor

The board is designed to fit into a custom chassis. Figure 17 illustrates the mechanical form factor for the board. Dimensions are given in millimeters. The outer dimensions are 107.50 millimeters (front to back from furthest excursion of rear HDMI to front Type C) by 101.60 millimeters (side to side). The mounting post centers are identified by the 95.00, 94.75, and 90.50 millimeters measurements.

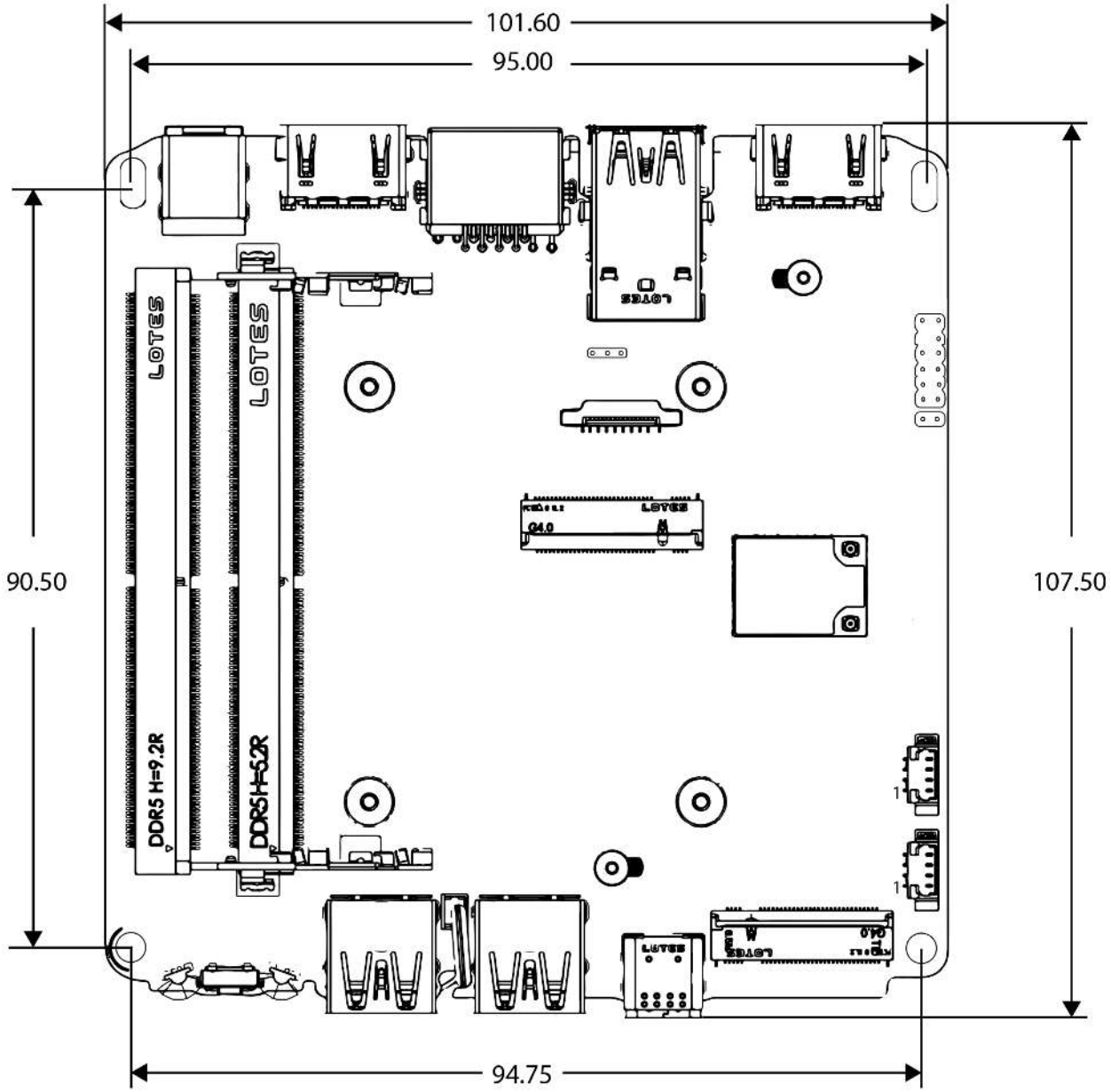

Figure 17. Board Dimensions

Figure 18 shows the height dimensions of the board. Dimensions are in mm. The tallest feature on the user accessible side of the board when in use is the M.2 retention pegs, and on the CPU side is the thermal module.

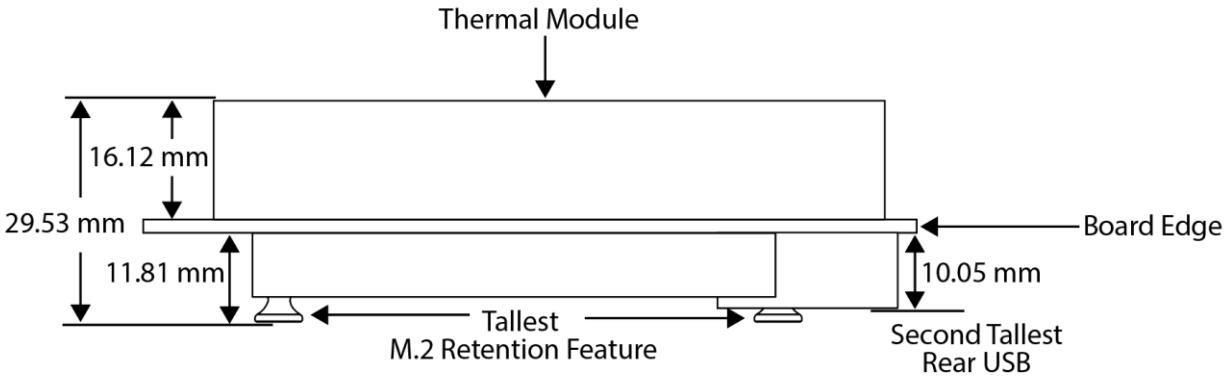

Figure 18. Board Height Dimensions

4.3 Thermal Considerations

CAUTION

Failure to ensure appropriate airflow may result in reduced performance of both the processor and/or voltage regulator or, in some instances, damage to the board.

All responsibility for determining the adequacy of any thermal or system design remains solely with the system integrator. Intel makes no warranties or representations that merely following the instructions presented in this document will result in a system with adequate thermal performance.

CAUTION

Ensure that the ambient temperature does not exceed the board's maximum operating temperature. Failure to do so could cause components to exceed their maximum case temperature and malfunction. For information about the maximum operating temperature, see the environmental specifications in Section 0.

CAUTION

Ensure that proper airflow is maintained in the processor voltage regulator circuit. Failure to do so may result in shorter than expected product lifetime.

4.4 Reliability

The demonstrated Mean Time Between Failures (MTBF) is done through 24/7 testing. Full ASUS NUC systems in chassis with memory, SSD or HDD, and a fan are ran at 100% on time for 90 days continuously while running system wide stress inducing software in a 40 °C ambient air temperature chamber. The demonstrated MTBF for ASUS NUC Board NUC14RV is >50,000 hours.

4.5 Environmental

Table 18 lists the environmental specifications for the board.

CAUTION

If the external ambient temperature exceeds 40 °C, further thermal testing is required to ensure components do not exceed their maximum operating temperature.

Table 18. Environmental Specifications

Parameter	Specification		
Temperature			
Sustained Storage Limits (i.e. warehouse)	-20 °C to +40 °C		
Short Duration Limits (i.e. shipping)	-40 °C to +60 °C		
Ambient Operating – NUC Kit*	Up to 0 °C to +40 °C		
Ambient Operating – NUC Board*	0 °C to +50 °C (Local ambient temperature inside the chassis)		
	* Processor performance may automatically decrease when the system operates in the top 5 °C of the ambient operating temperature ranges above.		
Shock (Board)			
Unpackaged	50 g trapezoidal waveform		
	Velocity change of 170 inches/s²		
Packaged	Free fall package drop machine set to the height determined by the weight of the package.		
	Product Weight (pounds)	Non-palletized Product drop height (inches)	Palletized drop heights (single product) (inches)
	<20	36	N/A
	21-40	30	N/A
	41-80	24	N/A
	81-100	18	12
	100-120	12	9
Shock (System)			
Unpackaged	25g trapezoidal waveform		
	Velocity = 250 inches/sec, 2 shock table drops in each of 6 directions		
Vibration (Board)			
Unpackaged	Random profile 5 Hz @ 0.01 g^2/Hz to 20 Hz @ 0.02 g^2/Hz(slope up) 20 Hz to 500 Hz @ 0.02 g^2/Hz (flat)		
	Input acceleration is 3.13g RMS		
Vibration (System)			

Unpackaged	Random profile 5 Hz @ 0.001 g^2/Hz to 20 Hz @ 0.01 g^2/Hz(slope up) 20 Hz to 500 Hz @ 0.01 g^2/Hz (flat)
	Input acceleration is 2.20g RMS
Packaged	Random Profile: 0.001 g^2/Hz to 20 Hz @ 0.01 g^2/Hz (slope up) 20 Hz to 500 Hz @ 0.01 g@/Hz (flat)
	Input acceleration is 2.20g RMS

Note: The operating temperature of the board may be determined by measuring the air temperature from the junction of the heatsink fins and fan, next to the attachment screw, in a closed chassis, while the system is in operation.

Note: Before attempting to operate this board, the overall temperature of the board must be above the minimum operating temperature specified. It is recommended that the board temperature be at least room temperature before attempting to power on the board. The operating and non-operating environment must avoid condensing humidity.

5 Overview of BIOS Features

5.1 Introduction

The board uses an ASUS AMI BIOS core that is stored in the Serial Peripheral Interface Flash Memory (SPI Flash) and can be updated through multiple methods (see Section 5.2). The SPI Flash contains the BIOS Setup program, POST, the PCI auto-configuration utility, LAN EEPROM information, and Plug and Play support. The SPI Flash includes a flash memory device of either 32MB or 64MB depending on SKU.

The BIOS Setup program can be used to view and change the identification information and the BIOS settings for the system. The BIOS Setup program is accessed by pressing <F2> after the POST memory test beings and before the operating system boots.

5.2 BIOS Updates

The BIOS can be updated using one of the following methods:

1. Express BIOS (Windows-based) Update
2. F7 Update
3. Power Button Menu Update
4. UEFI Shell Update

5.2.1 BIOS Recovery

It is unlikely that anything will interrupt a BIOS update; however, if an interruption occurs the BIOS could be unstable. Table 19 lists the drives and media types that can be used for BIOS recovery. The BIOS recovery media does not need to be made bootable.

Table 19. Acceptable Drives/Media Type for BIOS Recovery

Media Type (Note)	Can be used for BIOS recovery?
Hard disk drive (connected to SATA or USB)	Yes
USB flash drive	Yes
NVME SSD (M.2 interface)	Yes

NOTE *Supported file systems for BIOS recovery: NTFS (sparse, compressed, or encrypted files are not supported), FAT32, EXT*

5.3 Boot Options

In the BIOS Setup program, the user can choose to boot from a hard drive, removeable driver, or the network. The default setting is for the hard drive to be the first boot device, the removeable drive second, and the network third.

NOTE *The network can be selected as a boot device. This selection allows booting from the onboard LAN or a network add-in card with a remote boot ROM installed. Pressing the <F12> key during POST automatically forces booting from the LAN. To use this key during POST, the User Access Level in the BIOS Setup program's Security menu must be set to Full.*

5.3.1 Boot Device Selection During Post

Pressing the <F10> key during POST causes a boot device menu to be displayed. The menu displays the list of available boot devices.

5.3.2 Power Button Menu

As an alternative to Configuration Mode or normal POST hotkeys, the user can use the power button to access a menu with BIOS and boot options. The Power Button Menu is accessible via the following sequence:

1. System is in S4/S5 (not G3).
2. User pushes the power button and holds it down for 3 seconds.
3. The Power Button LED will be white color for the first 3 seconds. After 3 seconds, switch Power Button LED to yellow color to signal the user to release the power button.
4. User releases the power button before the 4-second shutdown override.
   If this boot path is taken, the BIOS will use default settings, ignoring settings in VPD where possible. At the point where Setup Entry/Boot would be in the normal boot path, the BIOS will display the following prompt and wait for a keystroke:

   If an unrecognized key is hit, then the BIOS will do nothing and wait for another keystroke. If one of the listed hotkeys is hit, the BIOS will follow the indicated boot path. Password requirements must still be honored.

Table 20. Power Button Menu Options

Keystroke	Option	Description
[ESC]	Normal Boot	
[F2]	BIOS Setup Menu	
[F3]	Disable Fast Boot	Note: Will only be displayed if at least one Fast Boot optimization is enabled. If Disable Fast Boot is selected, the BIOS will disable all Fast Boot optimizations and reset the system.
[F4]	BIOS Recovery	The BIOS will search for a matching .CAP file from the \EFI\Intel folder in the supported media with the supported file system. If a matching recovery capsule is found, the BIOS will display the following: **BIOS will Recover to <BIOSID> in 20 seconds.** **[ESC] Cancel Recovery** Recovery will proceed if not cancelled via the ESC key within 20 seconds. The BIOS shall display the recovery progress. If a BIOS .CAP file was not

		detected (or the BIOS Recovery was cancelled) then the BIOS will reset the system and continue normally to POST.
[F5]	Restore BIOS Settings	The BIOS will restore the current setup settings and the current defaults to the build time defaults in the case of a boot issue caused by setup variable changes.
[F7]	Update BIOS	BIOS Update during the BDS phrase. The BIOS will update independent of any OS loading and provides a menu UI accessible during boot up. This is not a recovery tool and will not overwrite a corrupt BIOS or ME firmware.
[F9]	Remote Assistance	Note: Will only be displayed if Remote Assistance is supported.
[F10]	Enter Boot Menu	
[F12]	Network Boot	

5.4 Hard Disk Drive Password Security Feature

The Hard Disk Drive Password Security feature blocks ready and write access to the hard disk drive until the correct password is given. Hard disk drive passwords are set in BIOS Setup and are prompted for BIOS POST. For convenient support for resuming from S3, the system BIOS will automatically unlock drives on resume from S3. Valid password characters are A-Z, a-z, and 0-9. Passwords may be up to 32 characters in length.

The User hard disk drive password, when set, will be required on each power cycle until the Master Key or User hard disk drive password is submitted.

The Master Key hard disk drive password, when set, will not lock the drive. The Master Key hard disk drive password exists as an unlock override if the User hard disk drive password is forgotten. Only the User hard disk drive password, when set, will cause a hard disk to be locked on a system power cycle. Table 21 show the effects of setting the hard disk drive passwords.

Table 21. Master Key and User Hard Disk Drive Password Functions

Password Set	Password During Boot
Neither	None
Master only	None
User only	User only
Master and User Set	User

During every POST, if a User hard disk drive password is set, POST execution will pause with the following prompt to force the User to enter the Master Key or the User hard disk drive password:

"Enter Hard Disk Drive Password:"

Upon successful entry of the Master Key or User hard disk drive password, the system will continue with normal POST.

If the hard disk drive password is not correctly entered, the system will go back to the above prompt. The User will have three attempts to correctly enter the hard disk drive password. After the third unsuccessful attempt, the system will halt with the following message:

"Hard Disk Drive Password Entry Error"

A manual power cycle will be required to resume system operation.

NOTE *As implemented on the ASUS NUC14RV board, the hard disk drive password security feature is only supported on the SATA Port 0 (M.2) or the SATA port 1 (onboard SATA connector).*

5.5 BIOS Security Features

The BIOS includes security features that restrict access to the BIOS Setup program and who can boot the computer. A Supervisor and User password can be set for the BIOS Setup program and for botting the computer, with the following restrictions:

- The Supervisor password gives unrestricted access to view and change all the Setup options in the BIOS Setup program. This is Supervisor Mode.
- The User password gives restricted access to view and change Setup options in the BIOS Setup program. This is User Mode.
- If only the Supervisor password is set, pressing the <Enter> key at the password prompt of the BIOS Setup program allows the user restricted access to Setup.
- If both the Supervisor and User passwords are set, users can enter either the Supervisor or User password to access Setup. Users have access to Setup regardless to which password is used.
- Setting the User password restricts who can boot the computer. The password prompt will be displayed before the computer boots. If only the Supervisor password is set, the computer boots without asking for a password. If both passwords are set, the user can enter either password to boot the computer.
- For enhanced security, use different passwords for the Supervisor and User passwords.
- Valid password characters are A-Z, a-z, 0-9, and special characters. Passwords may be up to 20 characters in length.
- To clear a set password, enter a blank password after entering the existing password.

Table 22 shows the effects of setting the Supervisor password and User password. This table is for reference only and is not displayed on the screen.

Table 22. Supervisor and User Password Functions

Password Set	Supervisor Mode	User Mode	Setup Options	Password to Enter Setup	Password During Boot
Neither	Any user can change all options	Any user can change all options	None	None	None
Supervisor only	Can change all options	Can change a limited number of options	Supervisor Password	Supervisor	None
User only	N/A	Can change all options	Enter Password Clear User Password	User	User
Supervisor and User set	Can change all options	Can change a limited number of options	Supervisor Password Enter Password	Supervisor or User	Supervisor or User

5.6 BIOS Error Messages

Table 23 lists the error messages and provides a brief description of each.

Table 23. BIOS Error Messages

Error Message	Explanation
CMOS Battery Failure	The battery may be losing power. Replace the battery soon.
CMOS Checksum Error	The CMOS checksum is incorrect. CMOS memory may have been corrupted. Run Setup to reset values.
Memory Size Decreased	Memory size has decreased since the last boot. If no memory was removed, then the memory may be bad.
CMOS Timer Not Set	The battery may be losing power. Replace the battery soon.
Processor Thermal Trip	Processor overheated.
Auto RTC Reset	The system triggers RTC clear to recover the system back to the normal condition from consecutive boot failure.