ASUS NUC 14 Pro Mini PC / Kit

NUC14RVH/NUC14RVK

User Guide

July 24

Disclaimer

No part of this manual, including the products and software described in it, may be reproduced, transmitted, transcribed, stored in a retrieval system, or translated into any language in any form or by any means, except documentation kept by the purchaser for backup purposes, without the express written permission of ASUSTeK COMPUTER INC. ("ASUS").
ASUS PROVIDES THIS MANUAL "AS IS" WITHOUT WARRANTY OF ANY KIND, EITHER EXPRESS OR IMPLIED, INCLUDING BUT NOT LIMITED TO THE IMPLIED WARRANTIES OR CONDITIONS OF MERCHANTABILITY OR FITNESS FOR A PARTICULAR PURPOSE. IN NO EVENT SHALL ASUS, ITS DIRECTORS, OFFICERS, EMPLOYEES OR AGENTS BE LIABLE FOR ANY INDIRECT, SPECIAL, INCIDENTAL, OR CONSEQUENTIAL DAMAGES (INCLUDING DAMAGES FOR LOSS OF PROFITS, LOSS OF BUSINESS, LOSS OF USE OR DATA, INTERRUPTION OF BUSINESS AND THE LIKE), EVEN IF ASUS HAS BEEN ADVISED OF THE POSSIBILITY OF SUCH DAMAGES ARISING FROM ANY DEFECT OR ERROR IN THIS MANUAL OR PRODUCT.
Products and corporate names appearing in this manual may or may not be registered trademarks or copyrights of their respective companies, and are used only for identification or explanation and to the owners' benefit, without intent to infringe.
SPECIFICATIONS AND INFORMATION CONTAINED IN THIS MANUAL ARE FURNISHED FOR INFORMATIONAL USE ONLY, AND ARE SUBJECT TO CHANGE AT ANY TIME WITHOUT NOTICE, AND SHOULD NOT BE CONSTRUED AS A COMMITMENT BY ASUS. ASUS ASSUMES NO RESPONSIBILITY OR LIABILITY FOR ANY ERRORS OR INACCURACIES THAT MAY APPEAR IN THIS MANUAL, INCLUDING THE PRODUCTS AND SOFTWARE DESCRIBED IN IT. Copyright © 2024 ASUSTeK COMPUTER INC. All Rights Reserved.
LIMITATION OF LIABILITY
Circumstances may arise where because of a default on ASUS' part or other liability, you are entitled to recover damages from ASUS. In each such instance, regardless of the basis on which you are entitled to claim damages from ASUS, ASUS is liable for no more than damages for bodily injury (including death) and damage to real property and tangible personal property; or any other actual and direct damages resulted from omission or failure of performing legal duties under this Warranty Statement, up to the listed contract price of each product. ASUS will only be responsible for or indemnify you for loss, damages or claims based in contract, tort or infringement under this Warranty Statement. This limit also applies to ASUS' suppliers and its reseller. It is the maximum for which ASUS, its suppliers, and your reseller are collectively responsible. UNDER NO CIRCUMSTANCES IS ASUS LIABLE FOR ANY OF THE FOLLOWING: (1) THIRD-PARTY CLAIMS AGAINST YOU FOR DAMAGES; (2) LOSS OF, OR DAMAGE TO, YOUR RECORDS OR DATA; OR (3) SPECIAL, INCIDENTAL, OR INDIRECT DAMAGES OR FOR ANY ECONOMIC CONSEQUENTIAL DAMAGES (INCLUDING LOST PROFITS OR SAVINGS), EVEN IF ASUS, ITS SUPPLIERS OR YOUR RESELLER IS INFORMED OF THEIR POSSIBILITY. SERVICE AND SUPPORT Visit our multi-language website at https://www.asus.com/support/.

Contents

1.0 Introduction 5
1.1 Before You Begin 5
1.2 Installation Precautions 6
1.3 Observe Safety and Regulatory Requirements 6
1.4 Tools Needed 6
2.0 Open the Chassis 7
3.0 Upgrade System Memory 8
3.1 Upgrade to Different Memory 8
3.2 Install Additional Memory 9
4.0 Changing the M.2 SSD 10
4.1 Install Additional M.2 11
5.0 Close the Chassis 12
4.1 Locking the chassis 14
6.0 Use the VESA Bracket (Optional) 15
7.0 Connect Power 18
8.0 Set Up Microsoft® Windows 11 19
9.0 Install the Latest Device Drivers and Software 20
10.0 Operating System Recovery 21

Revision History

Date	Revision	Description
June 2024	1.0	Initial release.
July 2024	1.1	Update for typo fix.

1.0 Introduction

This User Guide provides basic step-by-step installation instructions for these products:

- ASUS NUC 14 Pro Mini PC / ASUS NUC 14 Pro Kit

1.1 Before You Begin

CAUTIONS

The steps in this guide assume you're familiar with computer terminology and with the safety practices and regulatory compliance required for using and modifying computer equipment.

Disconnect the computer from its power source and from any network before performing any of the steps described in this guide.

Failure to disconnect power, telecommunications links, or networks before you open the computer or perform any procedures can result in personal injury or equipment damage. Some circuitry on the board can continue to operate even though the front panel power button is off.

Follow these guidelines before you begin:

- Always follow the steps in each procedure in the correct order.
- Create a log to record information about your computer, such as model, serial numbers, installed options, and configuration information.
- Electrostatic discharge (ESD) can damage components. Perform the procedures described in this chapter only at an ESD workstation using an antistatic wrist strap and a conductive foam pad. If such a station isn't available, you can provide some ESD protection by wearing an antistatic wrist strap and attaching it to a metal part of the computer chassis.

1.2 Installation Precautions

When you install and test the ASUS NUC, observe all warnings and cautions in the installation instructions.

To avoid injury, be careful of:

- Sharp pins on connectors
- Sharp pins on circuit boards
- Rough edges and sharp corners on the chassis
- Hot components (such as SSDs, processors, voltage regulators, and heat sinks)
- Damage to wires that could cause a short circuit

Observe all warnings and cautions that instruct you to refer computer servicing to qualified technical personnel.

1.3 Observe Safety and Regulatory Requirements

If you don't follow these instructions, you increase your safety risk and the possibility of noncompliance with regional laws and regulations.

1.4 Tools Needed

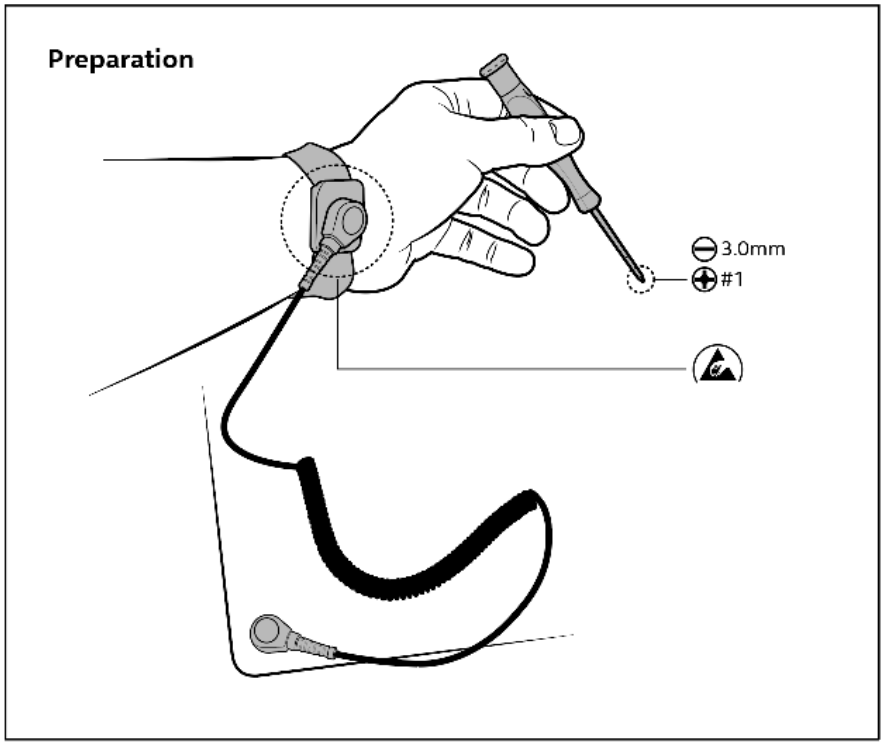

2.0 Open the Chassis

Using a flat head screwdriver twist the chassis lock a quarter turn to unlock the chassis. Then slide the latch toward the nearest rubber foot, and lift lid up.

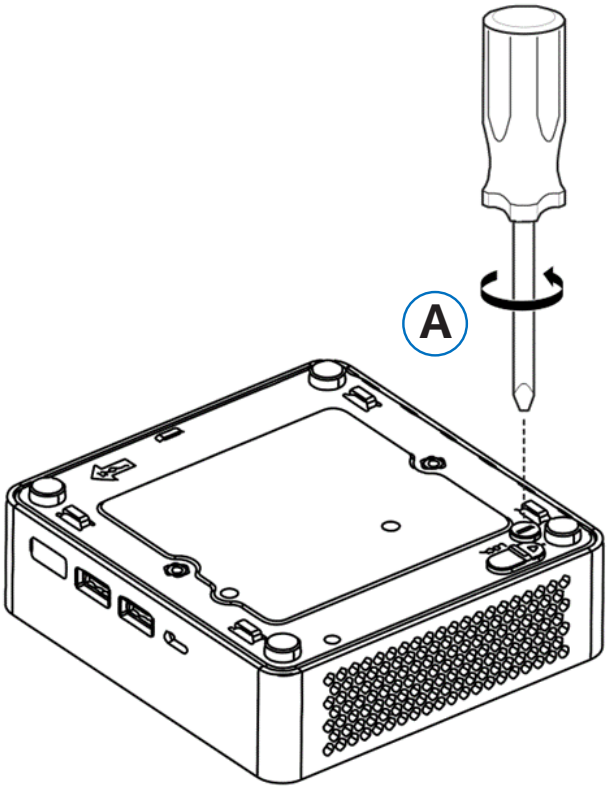

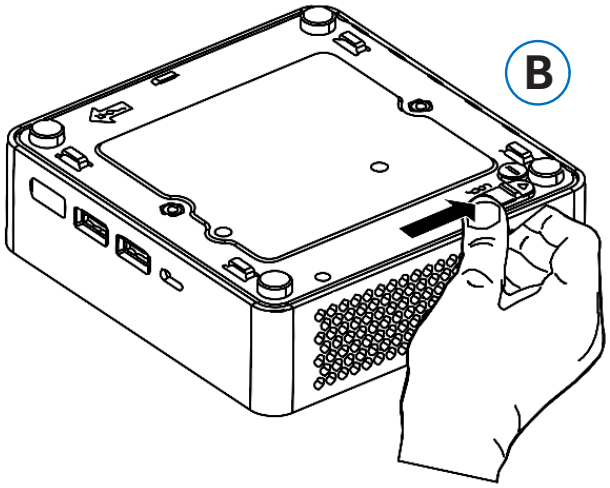

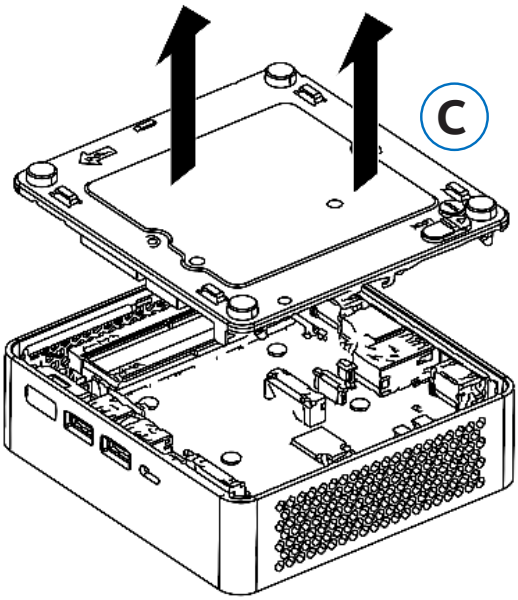

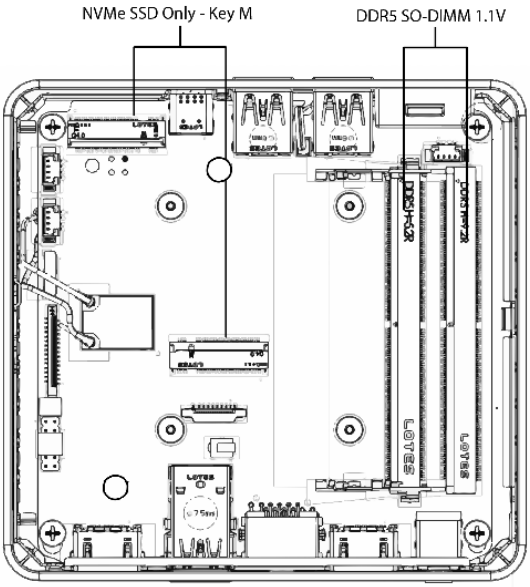

3.0 Upgrade System Memory

The ASUS NUC 14 Pro Mini PC NUC14RVH and NUC14RVK has two 262-pin DDR5 SO-DIMM sockets.

To upgrade memory, be sure to select memory modules that meet these requirements:

- 1.1V low voltage memory
- 4800/5200/5600 MHz SO-DIMMs
- Non-ECC
- Up to 96GB of system memory supported with 2 SO-DIMMs using 48GB memory modules

Find compatible and validated memory modules in the ASUS Qualified Vendor List:

- ASUS NUC 14 Pro Qualified Vendor List

NOTE	If you plan to install only one memory module, install it in the lower memory socket. Be aware that system performance may be degraded when running a single memory module.

3.1 Upgrade to Different Memory

1. Observe the precautions in "Before You Begin" in Section 1.1.
2. Turn off all peripheral devices connected to the computer.
3. Turn off the computer and disconnect the power cord.
4. Remove the computer's bottom chassis cover.
5. Remove the pre-installed memory module
   a. Gently spread the retaining clips at each end of the memory socket, which causes the module to pop out of the socket (C).
   b. Holding the module by the edges, lift it away from the socket, and store it in an anti-static package.
6. Install the new memory module
   a. Align the small space at the bottom edge of the memory module with the key in the socket.
   b. Insert the bottom edge of the module at a 45-degree angle into the socket (A).
   c. When the module is inserted, push down on the outer edges of the module until the retaining clips snap into place (B). Make sure the clips are firmly in place (C).

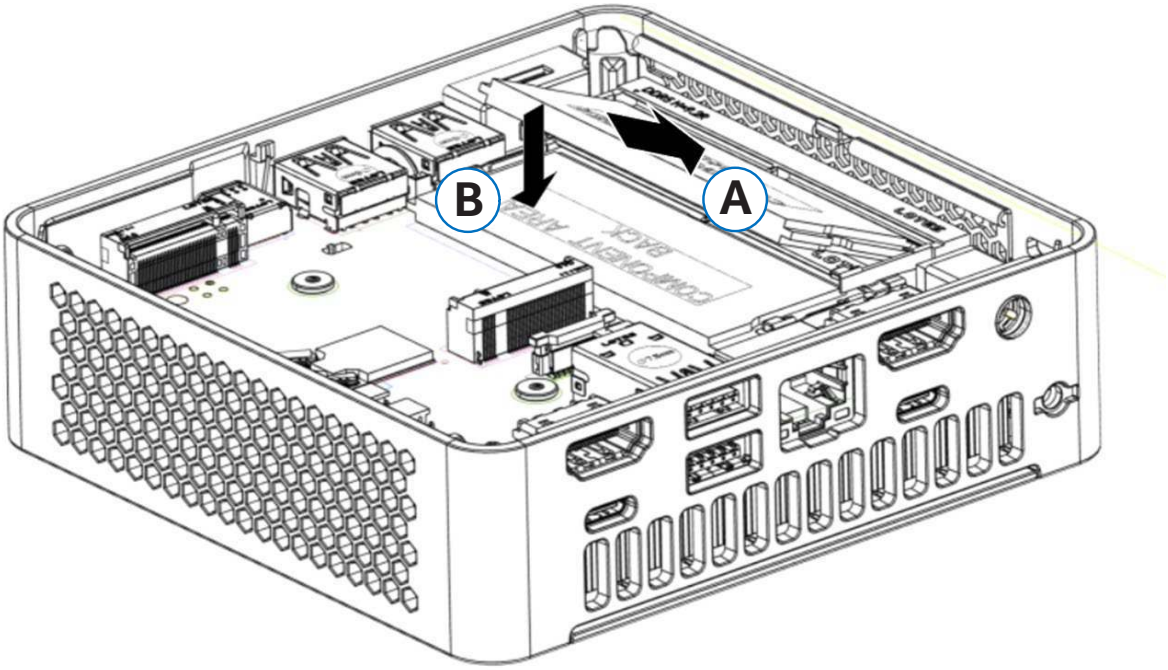

3.2 Install Additional Memory

1. Observe the precautions in "Before You Begin" in Section 1.1.
2. Turn off all peripheral devices connected to the computer.
3. Turn off the computer and disconnect the power cord.
4. Remove the computer's bottom chassis cover.
5. Install the additional module:
    a. Align the small space at the bottom edge of the memory module with the key on the socket.
    b. Insert the bottom edge of the module at a 45-degree angle into the socket (A).
    c. When the module is inserted, push down on the outer edges of the module until the retaining clips snap into place (B). Make sure both retention clips are firmly secure.
6. Reinstall and reconnect any parts you removed or disconnected to reach the memory sockets.
7. Replace the computer's cover and reconnect the power cord.

4.0 Changing the system storage

The ASUS NUC 14 Pro Mini PC NUC14RVK contains

- one 80mm connector supporting NVMe SSD
- one 42mm connector supporting NVMe SSD

The ASUS NUC 14 Pro Mini PC NUC14RVH contains

- one 80mm connector supporting NVMe SSD
- one 42mm connector supporting NVMe SSD
- one internal SATA bay supporting 2.5in SATA SSD/HDD

Find known compatible and validated storage devices in the ASUS Product Qualified Vendor List:

- ASUS NUC 14 Pro Qualified Vendor List

4.1 Install M.2 (RVK and RVH)

To install an M.2 SSD:

1. Remove the toolless plunger from the socket.
2. Remove the pre-installed SSD from the connector.
3. Align the space at the bottom of the new M.2 SSD to the key on the connector.
4. Insert the bottom edge of the M.2 SSD into the connector (A).
5. Secure the card to the toolless standoff with the plastic plunger (B).

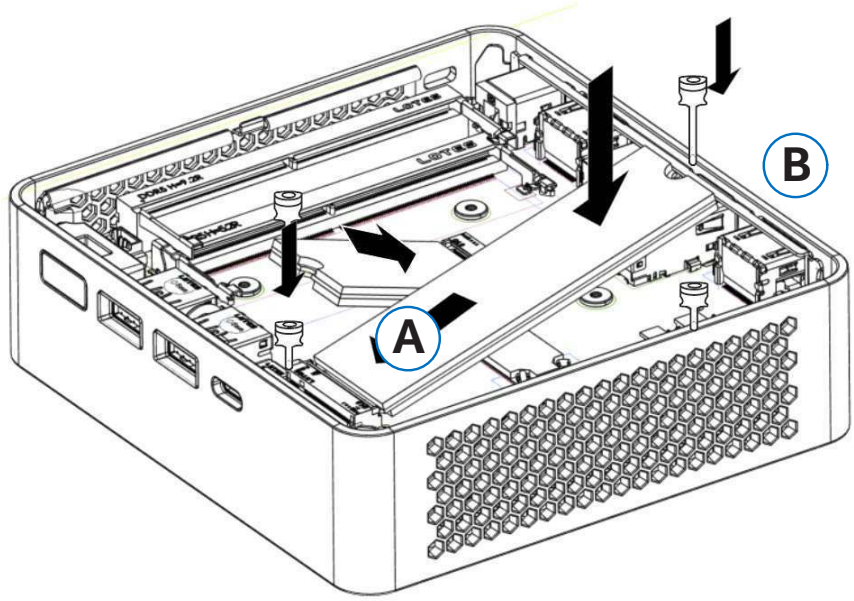

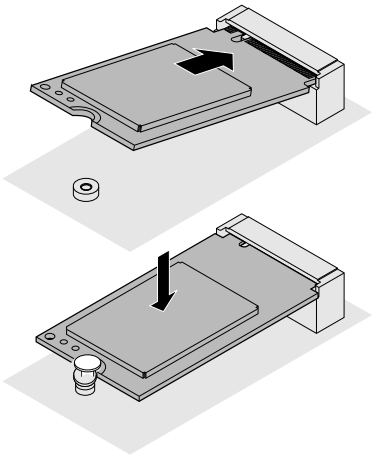

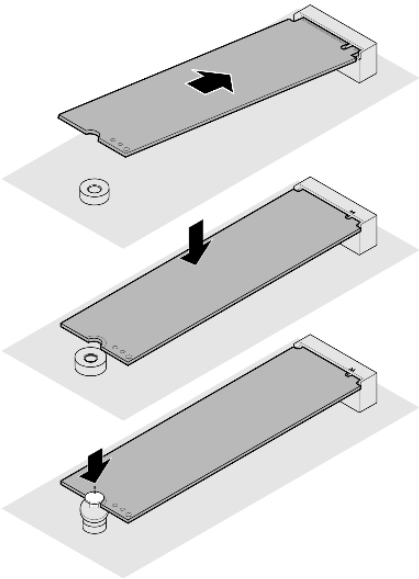

4.2 Install 2.5in drive (RVH only)

To install an 2.5in drive:

1. Insert the 2.5in drive into the bottom bracket.
2. Secure the 2.5in drive with the include M3 threaded Screws.

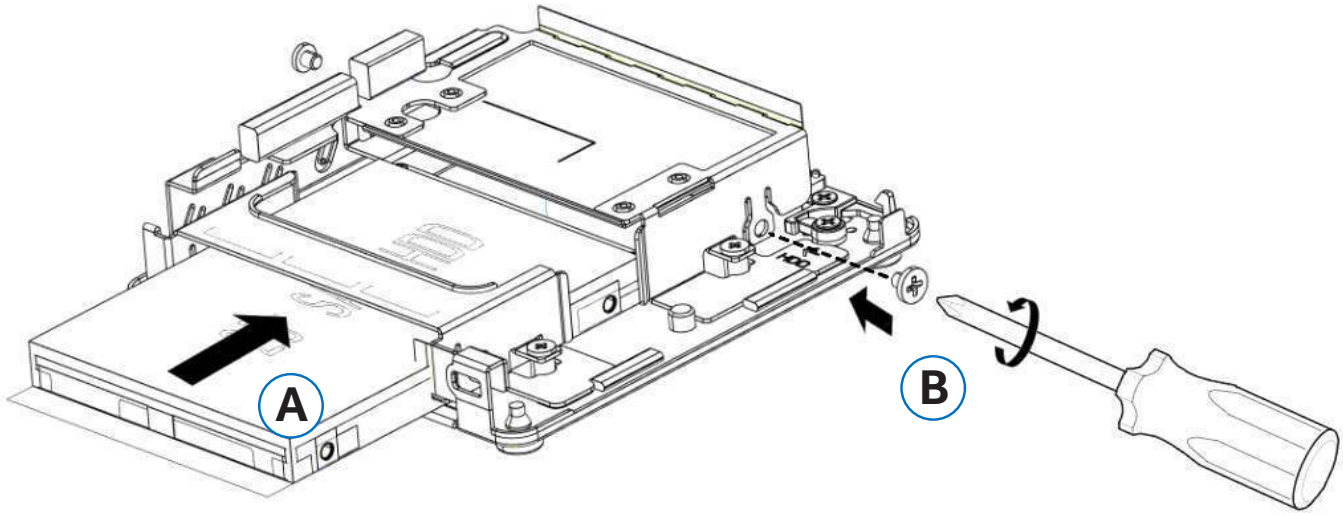

5.0 Close the Chassis

After all components have been installed, close the ASUS NUC chassis. ASUS recommends this be done by hand by aligning the chassis bottom cover at roughly a 30 degree angle and then slowly closing until the slide latch clicks closed.

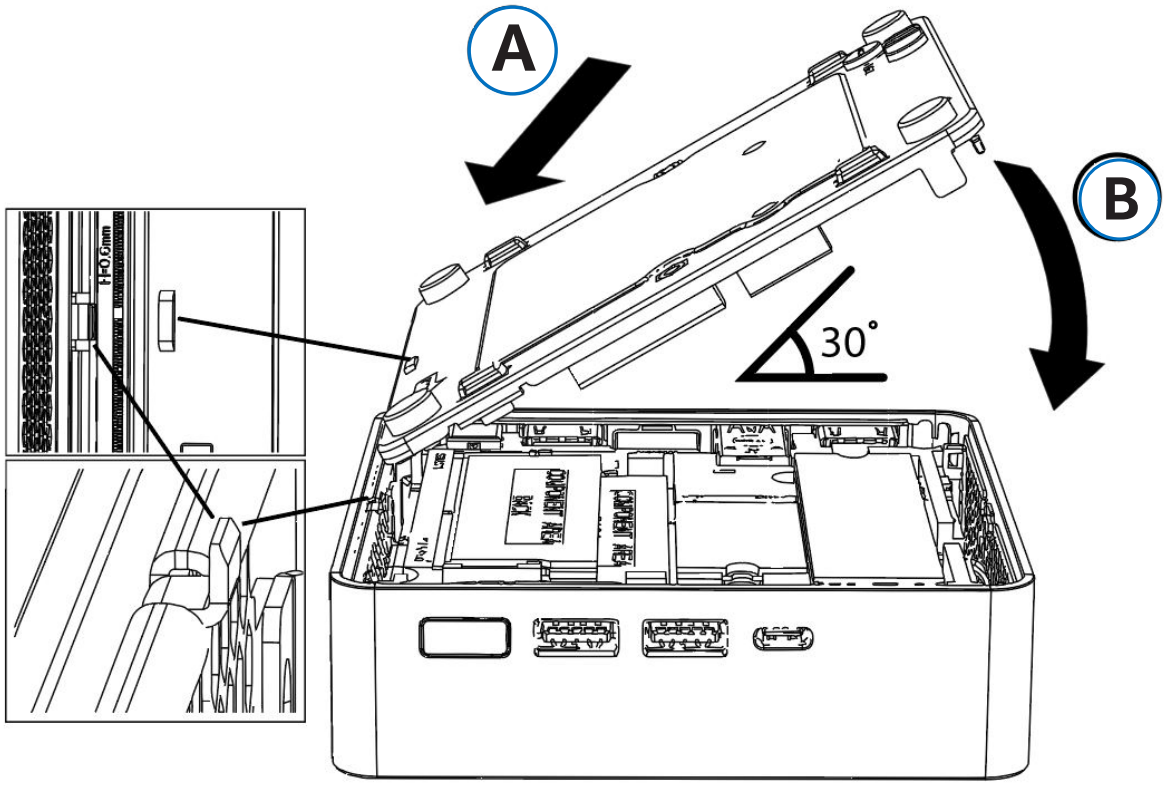

5.1 Locking the chassis

To lock the chassis for security, use the flat head screw driver again to turn the chassis lock a quarter turn into the locked position.

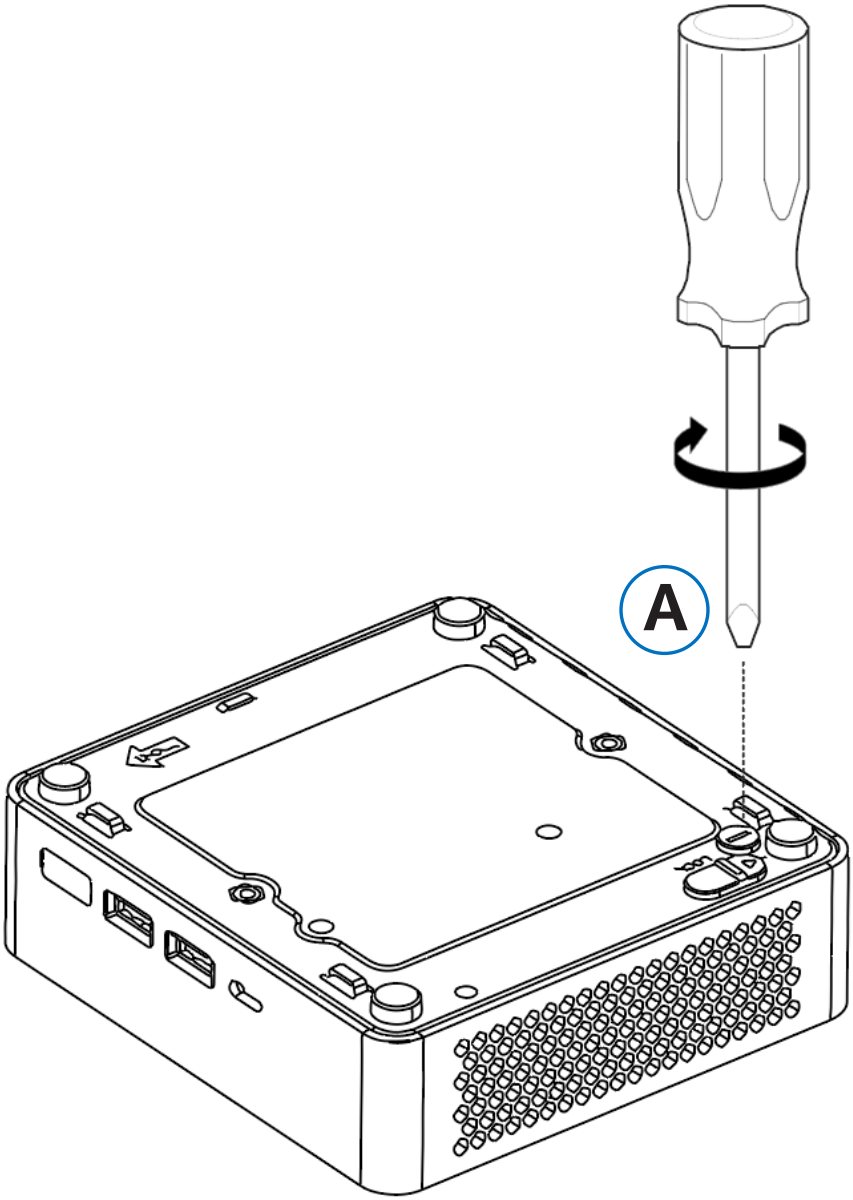

6.0 Use the VESA Bracket (Optional)

Follow these instructions to attach and use the VESA mount bracket:

1. Using the four small black screws that were included in the box, attach the VESA bracket to the back of the monitor or TV.

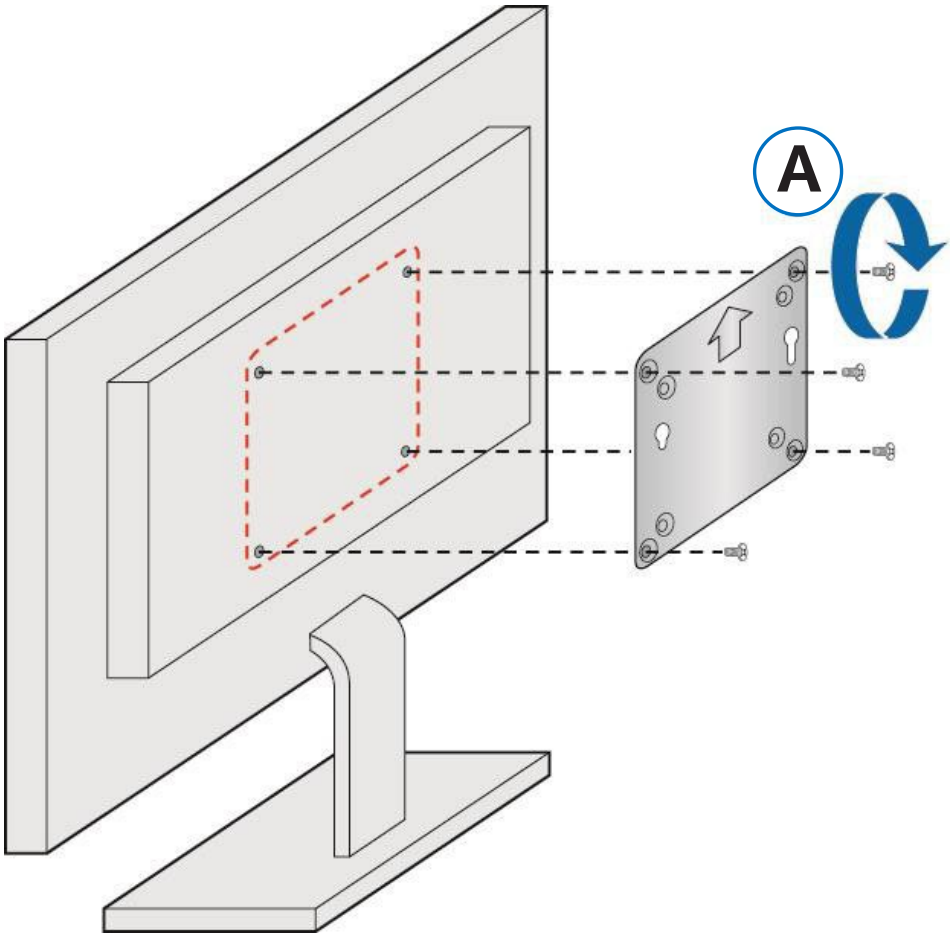

2. Attach the two slightly larger black screws to the bottom chassis cover of the ASUS NUC.

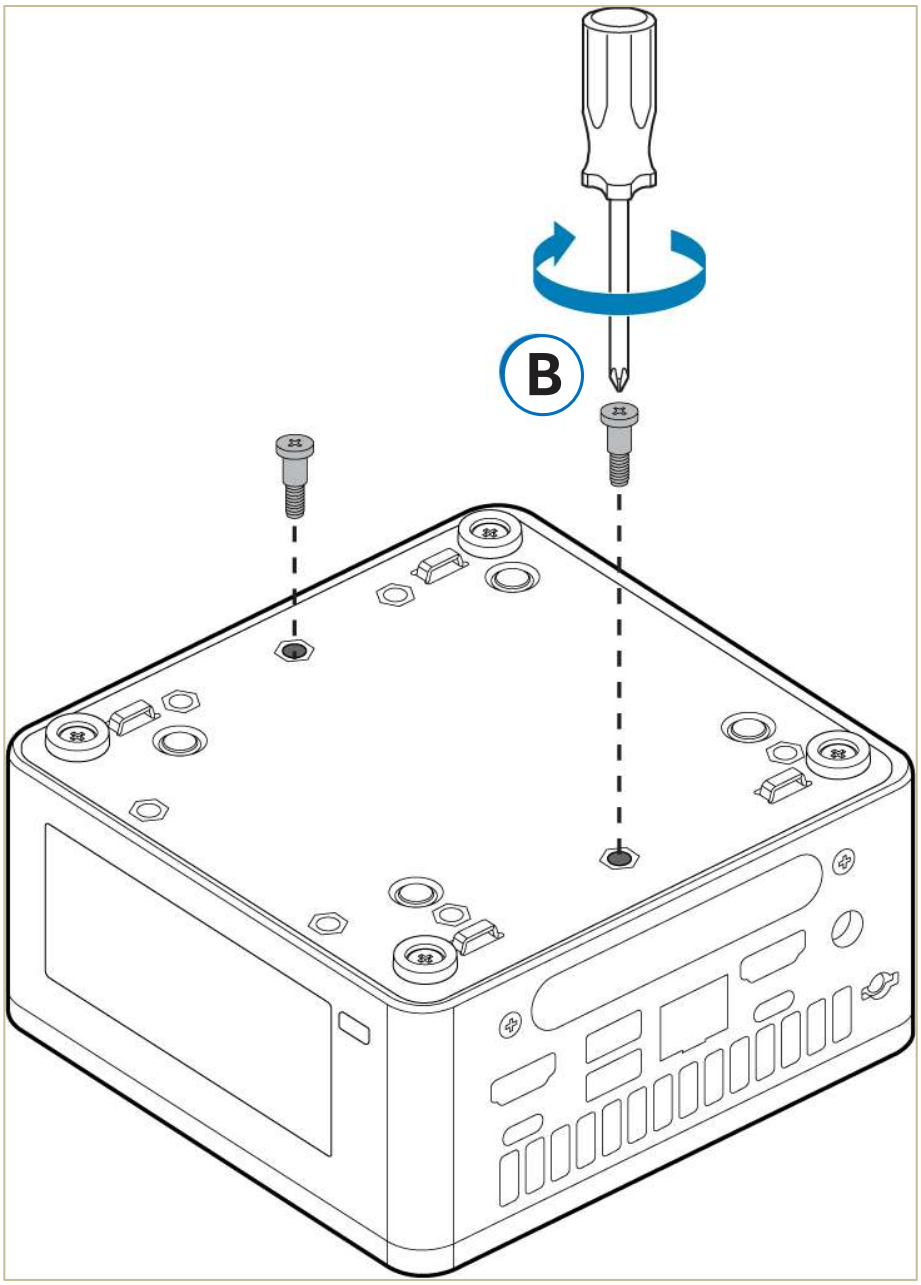

3. Slide the ASUS NUC onto the VESA mount bracket.

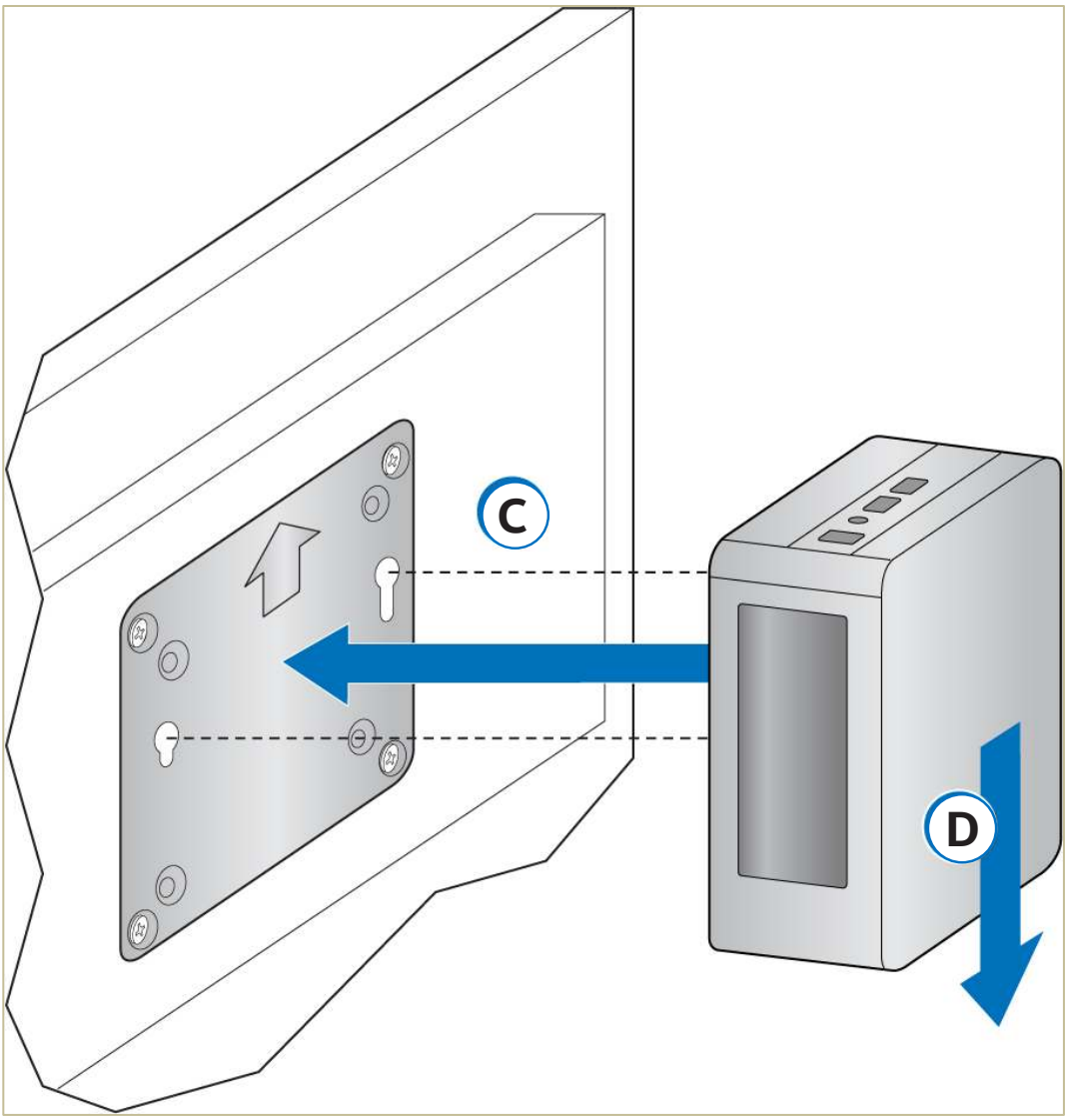

7.0 Connect Power

Each ASUS NUC model includes a region-specific AC power cord. Please check the box to make sure the power cord included is compatible with your intended usage.

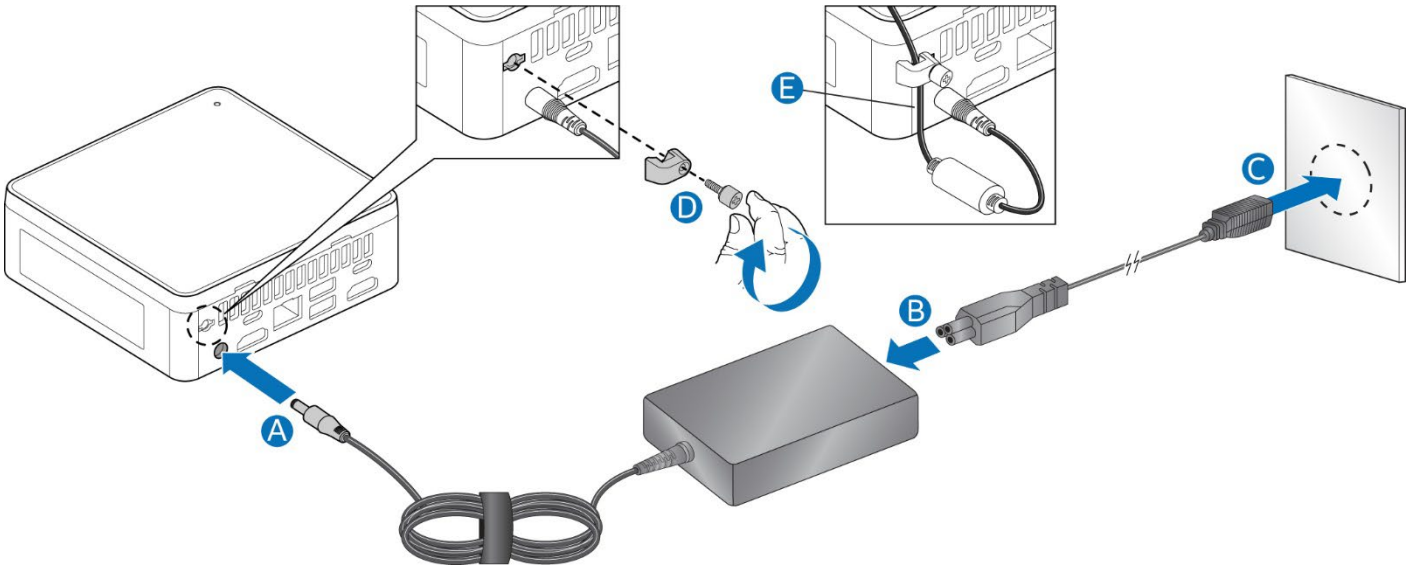

8.0 Set Up Microsoft® Windows 11

Microsoft Windows 11 is already installed on the ASUS NUC. The first time you start the computer, you are guided through the Windows 11 setup steps, including:

- Selecting your region and language.
- Accepting the Microsoft Windows license terms.
- Personalizing Windows and assign a PC Name.
- "Get Online" dialog to pick a wireless network (this step is optional).
- Choosing Express Settings or Customize.
- Assigning a Username and Password.

Reinstalling the Operating System

If you upgrade or replace the computer's drive, you may need to install a new version of the operating system. See these resources:

- Supported Operating Systems
- Windows Setup Guide

9.0 Install the Latest Device Drivers and Software

Here are the options for keeping device drivers current:

- Allow the MyASUS Application to detect out-of- date drivers.
- Manually download drivers, BIOS, and software from ASUS Download Center:
    - ASUS NUC 14 Pro Download Center
        - Select your model from the drop-down menu.

10.0 Operating System Recovery

There's a Windows recovery partition on the ASUS NUC. You can use this partition to Refresh, Reset, or Restore Windows. Here is what each of these actions do:

Refresh	If your PC isn't performing as well as it once did, and you don't know why, you can refresh your PC. This action doesn't delete any of your personal files or change your settings. Refresh does the following: • Files and personalization settings won't change. • PC settings are changed back to their defaults. • Apps from the Windows Store are kept. • Apps installed from disks or websites are removed. • List of removed apps is saved on the desktop.
Reset	If you want to recycle your PC, give it away, or start over with it, you can reset it completely. This process removes everything. Reset does the following: • All personal files and apps are removed. • PC settings are changed back to their defaults. • Windows is reinstalled.
Restore	If a recently installed app or driver is causing problems with your PC, you can restore Windows back to an earlier point in time, called a restore point. System Restore doesn't change your personal files, but it can remove recently installed apps and drivers.

Caution - Before performing a Refresh or Reset:

- Make sure to back up all personal data to external storage.

To access the recovery media:

If Windows starts	From Windows Start, type **Recovery** and select **Recovery Options**. See Recovery options in Windows 10/11 for complete details on how to use the recovery options.
If Windows doesn't start	The recovery process should automatically start. If Recovery doesn't automatically start, attempt to restore system BIOS to defaults and try again. 1. Follow the recovery steps.