For technical review, sent 03 Jun 2021

RYOBI®

DRAFT

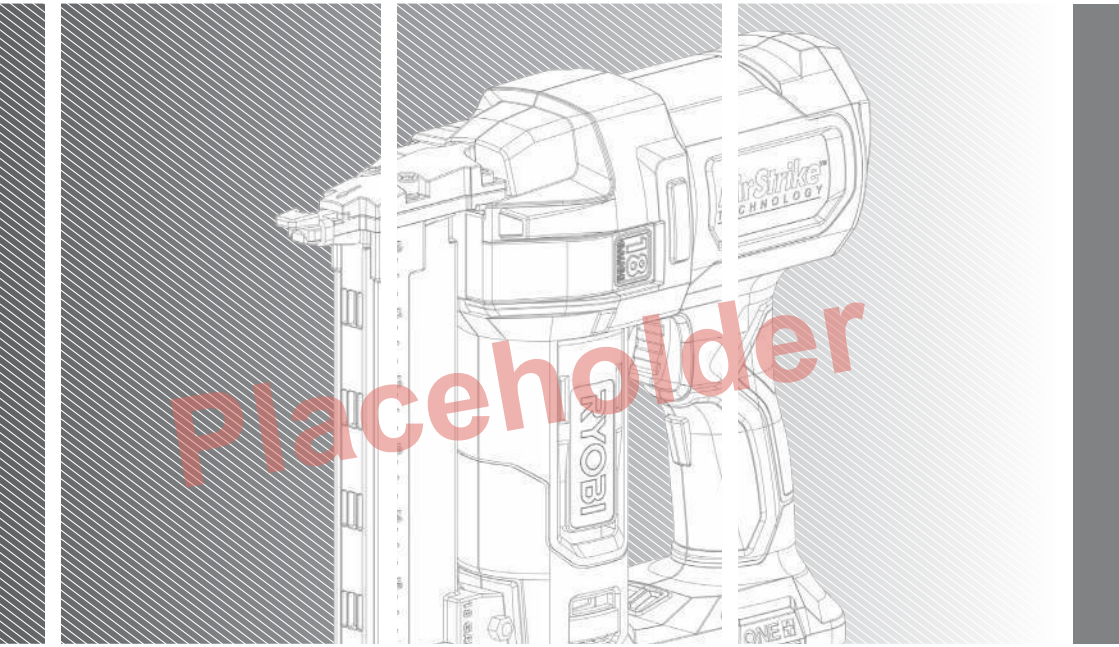


Placeholder

# R18GS18

**IMPORTANT!**

It is essential that you read the instructions in this manual before assembling, operating, and maintaining the product.

Subject to technical modifications.

Safety, performance, and dependability have been given top priority in the design of your stapler.

## INTENDED USE

The stapler is intended to be used only by adults who have read and understood the instructions and warnings in this manual, and can be considered responsible for their actions.

The product is intended to drive staples in soft materials such as wood.

This product is not suitable for fixing electric cables.

The product is intended for consumer use only.

Do not use the product for any other purpose. Use of the product for operations different from intended could result in a hazardous situation.

## GENERAL POWER TOOL SAFETY WARNINGS

⚠ **WARNING! Read all safety warnings, instructions, illustrations and specifications provided with this power tool.** Failure to follow all instructions listed below may result in electric shock, fire and/or serious injury.

**Save all warnings and instructions for future reference.**

The term “power tool’’ in the warnings refers to your mains-operated (corded) power tool or battery-operated (cordless) power tool.

### WORK AREA SAFETY

- **Keep work area clean and well lit.** Cluttered or dark areas invite accidents.
- **Do not operate power tools in explosive atmospheres, such as in the presence of flammable liquids, gases or dust.** Power tools create sparks which may ignite the dust or fumes.
- **Keep children and bystanders away while operating a power tool.** Distractions can cause you to lose control.

### ELECTRICAL SAFETY

- **Power tool plugs must match the outlet. Never modify the plug in any way. Do not use any adapter plugs with earthed (grounded) power tools.** Unmodified plugs and matching outlets will reduce risk of electric shock.
- **Avoid body contact with earthed or grounded surfaces, such as pipes, radiators, ranges and refrigerators.** There is an increased risk of electric shock if your body is earthed or grounded.
- **Do not expose power tools to rain or wet conditions.** Water entering a power tool will increase the risk of electric shock.
- **Do not abuse the cord. Never use the cord for carrying, pulling or unplugging the power tool. Keep cord away from heat, oil, sharp edges or moving parts.** Damaged or entangled cords increase the risk of electric shock.
- **When operating a power tool outdoors, use an extension cord suitable for outdoor use.** Use of a cord suitable for outdoor use reduces the risk of electric shock.
- **If operating a power tool in a damp location is unavoidable, use a residual current device (RCD) protected supply.** Use of an RCD reduces the risk of electric shock.

### PERSONAL SAFETY

- **Stay alert, watch what you are doing and use common sense when operating a power tool. Do not use a power tool while you are tired or under the influence of drugs, alcohol or medication.** A moment of inattention while operating power tools may result in serious personal injury.
- **Use personal protective equipment. Always wear eye protection.** Protective equipment such as dust mask, non-skid safety shoes, hard hat or hearing protection used for appropriate conditions will reduce personal injuries.
- **Prevent unintentional starting. Ensure the switch is in the off-position before connecting to power source and/or battery pack, picking up or carrying the tool.** Carrying power tools with your finger on the switch or energising power tools that have the switch on invites accidents.
- **Remove any adjusting key or wrench before turning the power tool on.** A wrench or a key left attached to a rotating part of the power tool may result in personal injury.
- **Do not overreach. Keep proper footing and balance at all times.** This enables better control of the power tool in unexpected situations.
- **Dress properly. Do not wear loose clothing or jewellery. Keep your hair and clothing away from moving parts.** Loose clothes, jewellery or long hair can be caught in moving parts.
- **If devices are provided for the connection of dust extraction and collection facilities, ensure these are connected and properly used.** Use of dust collection can reduce dust-related hazards.
- **Do not let familiarity gained from frequent use of tools allow you to become complacent and ignore tool safety principles.** A careless action can cause severe injury within a fraction of a second.

### POWER TOOL USE AND CARE

- **Do not force the power tool. Use the correct power tool for your application.** The correct power tool will do the job better and safer at the rate for which it was designed.
- **Do not use the power tool if the switch does not turn it on and off.** Any power tool that cannot be controlled with the switch is dangerous and must be repaired.
- **Disconnect the plug from the power source and/or remove the battery pack, if detachable, from the power tool before making any adjustments, changing accessories, or storing power tools.** Such preventive safety measures reduce the risk of starting the power tool accidentally.
- **Store idle power tools out of the reach of children and do not allow persons unfamiliar with the power tool or these instructions to operate the power tool.** Power tools are dangerous in the hands of untrained

For technical review, sent 03 Jun 2021

users.

- **Maintain power tools and accessories. Check for misalignment or binding of moving parts, breakage of parts and any other condition that may affect the power tool's operation. If damaged, have the power tool repaired before use.** Many accidents are caused by poorly maintained power tools.
- **Keep cutting tools sharp and clean.** Properly maintained cutting tools with sharp cutting edges are less likely to bind and are easier to control.
- **Use the power tool, accessories and tool bits etc. in accordance with these instructions, taking into account the working conditions and the work to be performed.** Use of the power tool for operations different from those intended could result in a hazardous situation.
- **Keep handles and grasping surfaces dry, clean and free from oil and grease.** Slippery handles and grasping surfaces do not allow for safe handling and control of the tool in unexpected situations.

### BATTERY TOOL USE AND CARE

- **Recharge only with the charger specified by the manufacturer.** A charger that is suitable for one type of battery pack may create a risk of fire when used with another battery pack.
- **Use power tools only with specifically designated battery packs.** Use of any other battery packs may create a risk of injury and fire.
- **When battery pack is not in use, keep it away from other metal objects, like paper clips, coins, keys, nails, screws or other small metal objects, that can make a connection from one terminal to another.** Shorting the battery terminals together may cause burns or a fire.
- **Under abusive conditions, liquid may be ejected from the battery; avoid contact. If contact accidentally occurs, flush with water. If liquid contacts eyes, additionally seek medical help.** Liquid ejected from the battery may cause irritation or burns.
- **Do not use a battery pack or tool that is damaged or modified.** Damaged or modified batteries may exhibit unpredictable behaviour resulting in fire, explosion or risk of injury.
- **Do not expose a battery pack or tool to fire or excessive temperature.** Exposure to fire or temperature above 130°C may cause explosion.
- **Follow all charging instructions and do not charge the battery pack or tool outside the temperature range specified in the instructions.** Charging improperly or at temperatures outside the specified range may damage the battery and increase the risk of fire.

### SERVICE

- **Have your power tool serviced by a qualified repair person using only identical replacement parts.** This will ensure that the safety of the power tool is maintained.
- **Never service damaged battery packs.** Service of battery packs should only be performed by the manufacturer or authorized service providers.

## STAPLER SAFETY WARNINGS

- **Always assume that the tool contains fasteners.** Careless handling of the stapler can result in unexpected firing of fasteners and personal injury.
- **Do not point the tool towards yourself or anyone nearby.** Unexpected triggering will discharge the fastener causing an injury.
- **Do not actuate the tool unless the tool is placed firmly against the workpiece.** If the tool is not in contact with the workpiece, the fastener may be deflected away from your target.
- **Disconnect the tool from the power source when the fastener jams in the tool.** While removing a jammed fastener, the stapler may be accidentally activated if it is plugged in.
- **Use caution while removing a jammed fastener.** The mechanism may be under compression and the fastener may be forcefully discharged while attempting to free a jammed condition.
- **Do not use this stapler for fastening electrical cables.** It is not designed for electric cable installation and may damage the insulation of electric cables thereby causing electric shock or fire hazards.

### ADDITIONAL SAFETY WARNINGS

- The product is designed for single-hand use. Do not hold the product by the front of the magazine. Do not put hands, head, or other parts of your body near the bottom of the magazine where the fastener exits the product, as serious personal injury could be caused.
- Always ensure that the workpiece contact is fully positioned above the workpiece. Positioning the workpiece contact only partially above the workpiece could cause the fastener to miss the workpiece completely and result in serious personal injury.
- Do not drive fasteners near edge of material. The workpiece may split causing the fastener to ricochet, injuring you or a coworker. Be aware that the fastener may follow the grain of the wood, causing it to protrude unexpectedly from the side of the work material or deflect, possibly causing injury.
- Keep hands and body parts clear of immediate work area. Hold workpiece with clamps when necessary to keep hands and body out of potential harm. Be sure the workpiece is properly secured before pressing the fastener against the material. The workpiece contact may cause the work material to shift unexpectedly.
- Keep face and body parts away from back of the tool cap when working in restricted areas. Sudden recoil can result in impact to the body, especially when stapling into hard or dense material.
- During normal use the product will recoil immediately after driving a fastener. This is a normal function of the product. Do not attempt to prevent the recoil by holding the product against the work. Restriction to the recoil can result in a second fastener being driven from the product. Grip the handle firmly, let the product do the work and do not place second hand on top of the product or near the exhaust at any time. Failure to heed this warning can result in serious personal injury.
- Do not drive fasteners on top of other fasteners or with the product at an overly steep angle as this may cause deflection

For technical review, sent 03 Jun 2021

of fasteners which could cause injury.

- Always check the work area for hidden wiring, gas lines, water lines, etc., before using the product on such work area.
- After using the product in the contact actuation mode, switch it back to the full sequential mode.
- The driving depth of the fastener may be adjusted beyond air pressure. It is advisable to test the depth on a scrap workpiece to determine the required depth for the application.
- Only fasteners matching the description in the product specifications table can be used with the product. Using incorrect fasteners may lead to jamming or other malfunctions.
- Always remove the battery before adjusting the depth of drive wheel.
- Do not pull back on the adjustment wheel; the wheel is designed to be rotated.
- Do not press the trigger while adjusting the depth of drive wheel.
- Always select full sequential firing mode before adjusting the depth of drive.
- Do not point the product towards yourself or anyone nearby when adjusting the depth of drive.
- Clamp workpiece with a clamping device. Unclamped workpieces can cause severe injury and damage.
- The product will restart automatically if stalled. Switch off the product immediately if it stalls. Do not switch on the product again while it is still stalled, as doing so could trigger a sudden recoil with a high reactive force. Determine why the product stalled and rectify this, paying heed to the safety instructions.
- Ambient temperature range for tool during operation is between 0°C and 40°C.
- Ambient temperature range for tool storage is between 0°C and 40°C.
- The recommended ambient temperature range for the charging system during charging is between 10°C and 38°C.

## ADDITIONAL BATTERY SAFETY WARNINGS

- To reduce the risk of fire, personal injury, and product damage due to a short circuit, never immerse your tool, battery pack or charger in fluid or allow a fluid to flow inside them. Corrosive or conductive fluids, such as seawater, certain industrial chemicals, and bleach or bleach-containing products, etc., can cause a short circuit.
- Ambient temperature range for battery during use is between 0°C and 40°C.
- Ambient temperature range for battery storage is between 0°C and 20°C.

### TRANSPORTING LITHIUM BATTERIES

Transport the battery in accordance with local and national provisions and regulations.

Follow all special requirements on packaging and labelling when transporting batteries by a third party. Ensure that no batteries can come in contact with other batteries or conductive materials while in transport by protecting exposed connectors with insulating, non-conductive caps or tape. Do not transport batteries that are cracked or leaking. Check with the forwarding company for further advice.

## KNOW YOUR PRODUCT

*See page 6.*

1. Battery port
2. Air pressure dial
3. Handle, insulated gripping surface
4. Trigger switch
5. LED light button
6. Mode selector
7. Belt clip screw hole
8. Magazine release button
9. No-mar pad
10. LED light
11. Depth of drive adjustment
12. No-mar pad
13. Safety contact tip
14. Belt clip
15. Belt clip screw
16. Operator's manual
17. Battery pack
18. Charger

## MAINTENANCE

- The product should never be connected to a power supply when assembling parts, making adjustments, cleaning, performing maintenance, or when the product is not in use. Disconnecting the product from the power supply will prevent accidental starting that could cause serious injury.
- When servicing, use only original manufacturer's replacement parts, accessories and attachments. Use of any other parts may create a hazard or cause product damage.
- Avoid using solvents when cleaning plastic parts. Most plastics are susceptible to various types of commercial solvents and may be damaged by their use. Use clean cloths to remove dirt, carbon dust, etc.
- Do not at any time let brake fluids, gasoline, petroleum-based products, penetrating oils, etc., come in contact with plastic parts. Chemicals can damage, weaken or destroy plastic which may result in serious personal injury.
- For greater safety and reliability, all repairs should be performed by an authorised service centre.

## SYMBOLS ON THE PRODUCT

Safety Alert

V Volts

Direct current

Fastener length

Fastener width

Ga Fastener gauge

For technical review, sent 03 Jun 2021

Fastener diameter

European Conformity Mark

British Conformity Mark

Ukraine Conformity Mark

EurAsian Conformity Mark

Please read the instructions carefully before starting the machine.

Wear eye protection

Keep hands away

Depth adjustment

Full sequential actuation

Contact actuation

Waste electrical products should not be disposed of with household waste. Please recycle where facilities exist. Check with your Local Authority or retailer for recycling advice.

## SYMBOLS IN THIS MANUAL

Note

Parts or accessories sold separately

For technical review, sent 03 Jun 2021

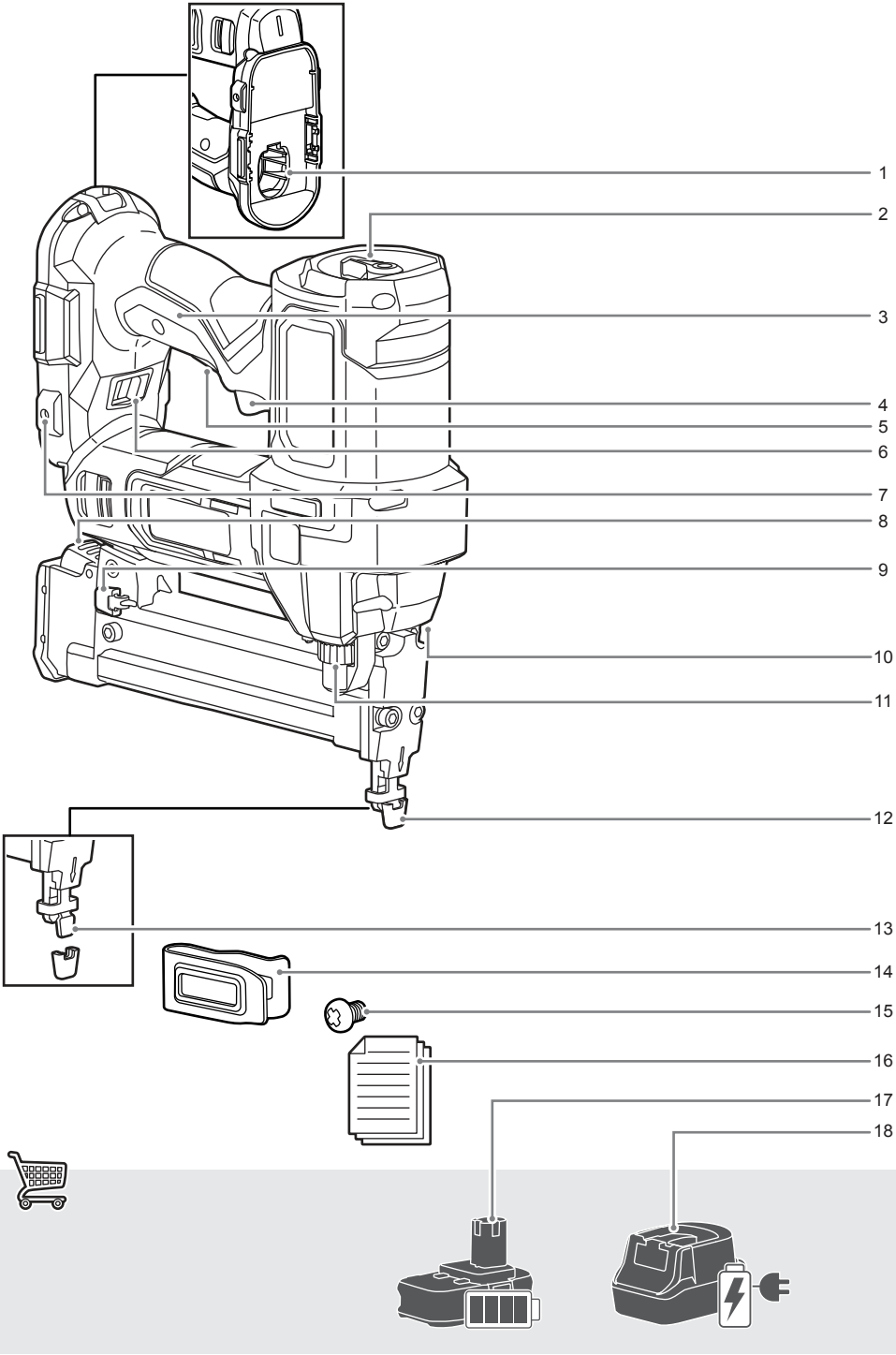

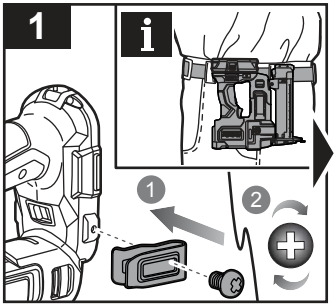


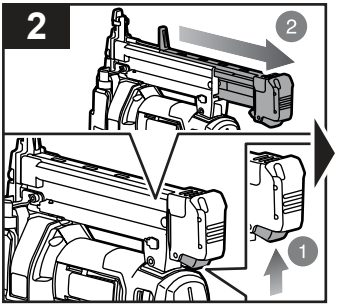


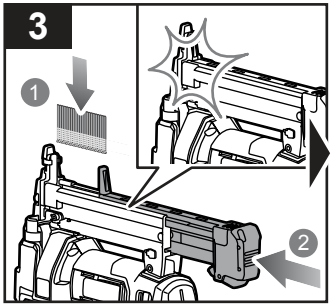


4

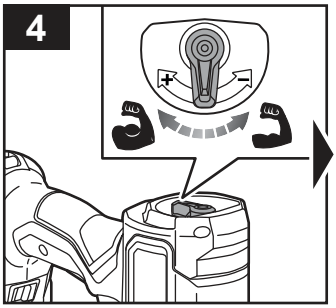


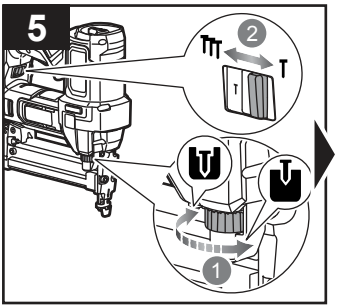


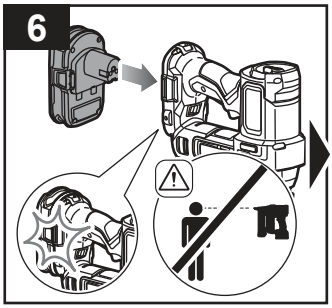


7

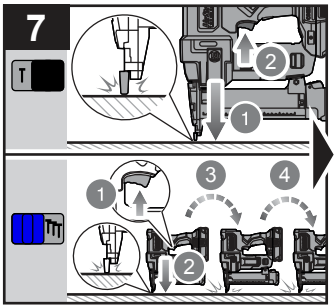


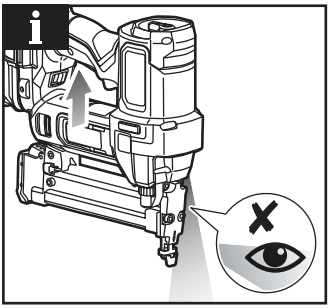

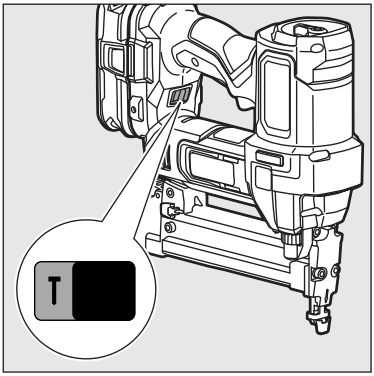
T

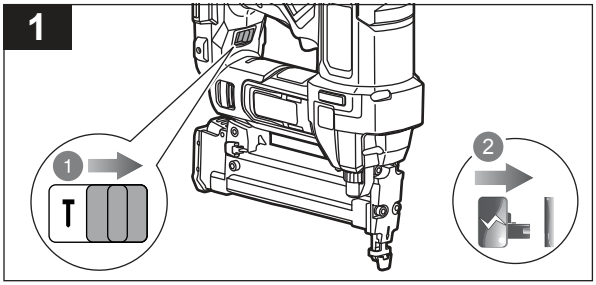
1
1
T
2

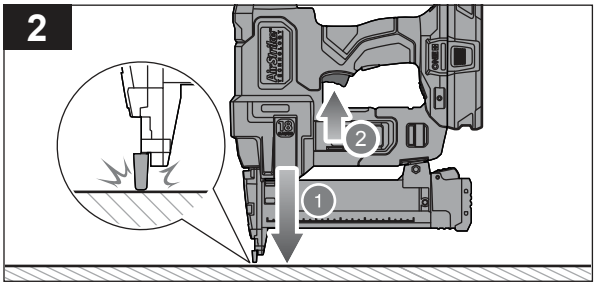
2
2
1

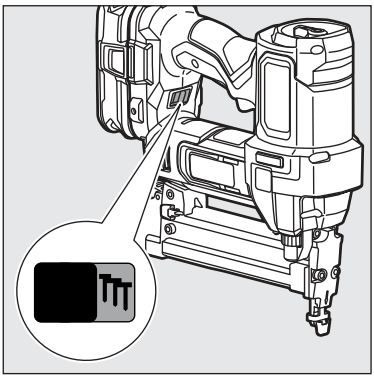
TTT

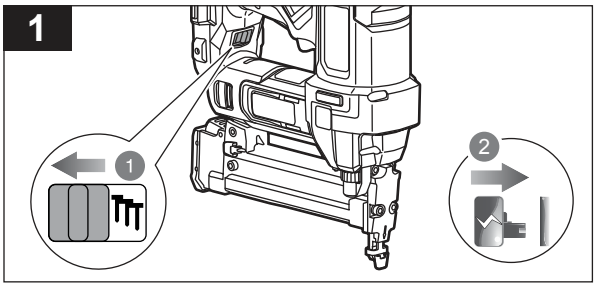
1
1
TTT
2

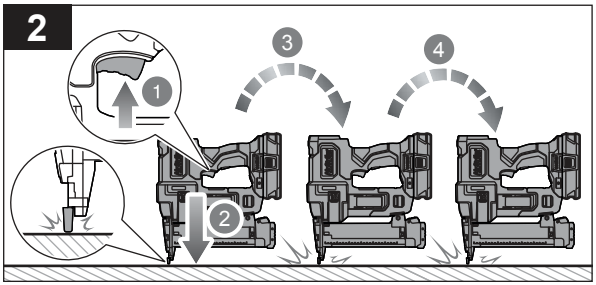
2
1
3
4
2

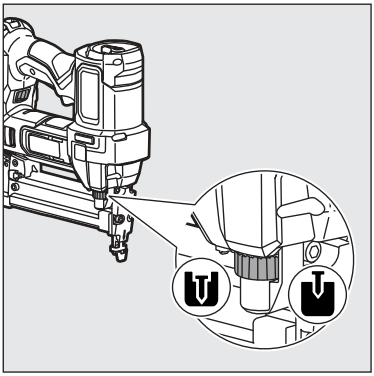

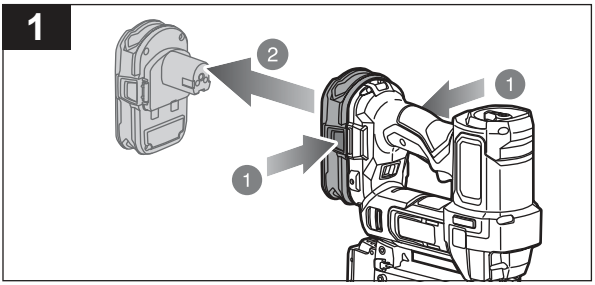
1
2
1
1

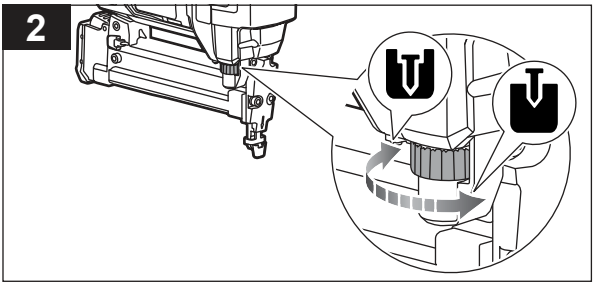
2

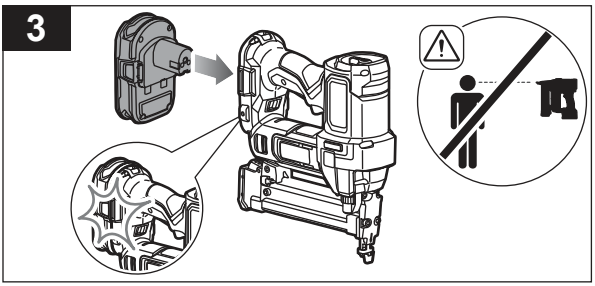
3

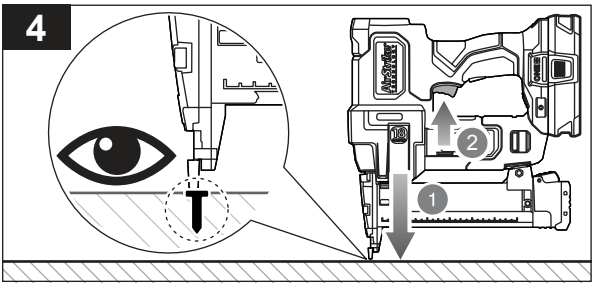
4
2
1

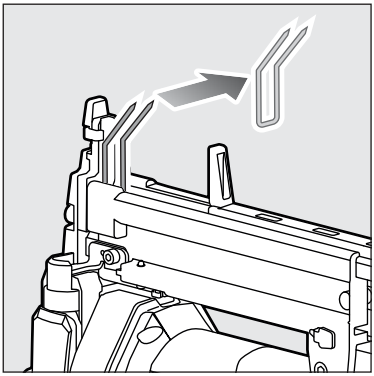

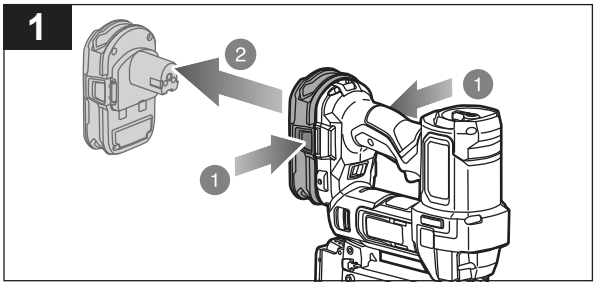


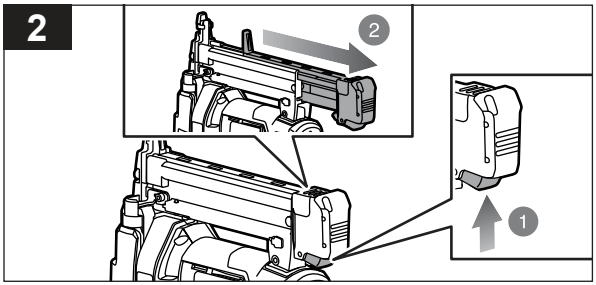


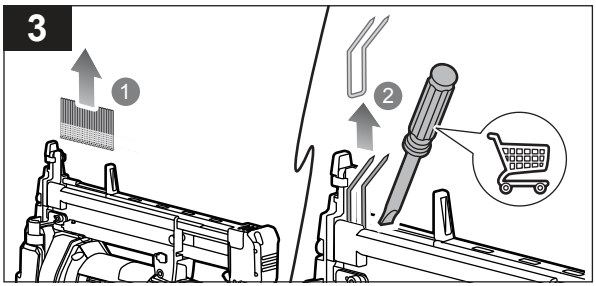


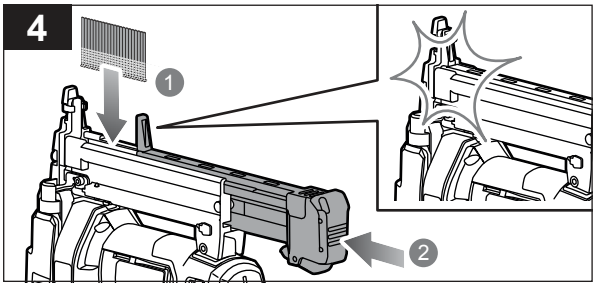


20210603v1_d3

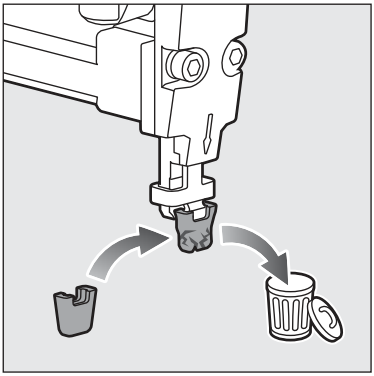

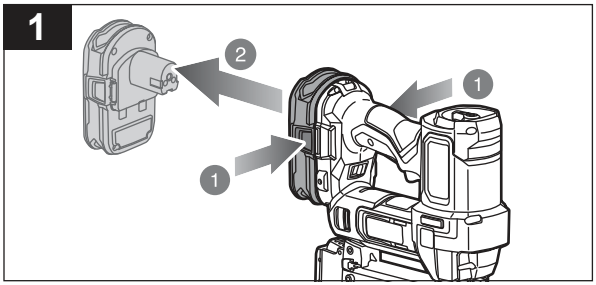
1
2
1
1

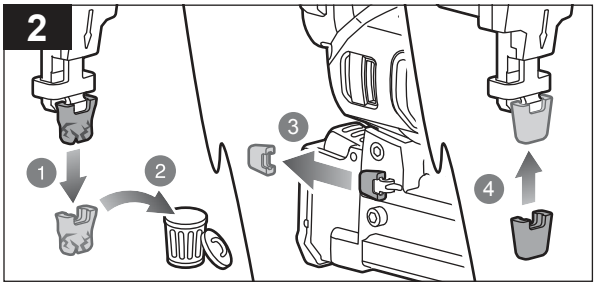
2
1
2
3
4

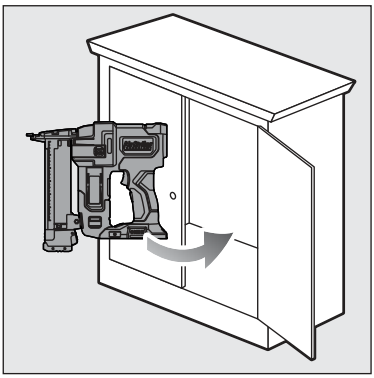

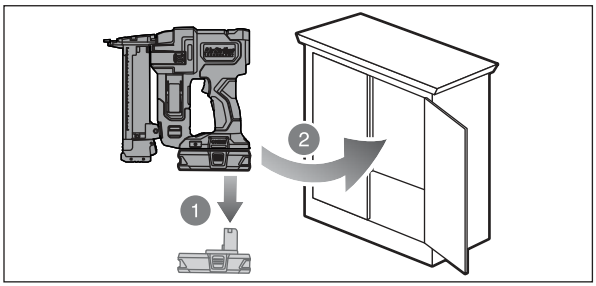
2
1

## TROUBLESHOOTING

| PROBLEM | POSSIBLE CAUSE | SOLUTION |
|---|---|---|
| Work-contacting element does not depress fully - product does not operate. | Staples are low.<br>Work-contacting element is jammed. | Replenish the staples.<br>Remove the battery and clear the debris. |
| Product operates properly, but fasteners are not driven fully. | Air pressure is too low.<br>Depth of drive is not deep enough.<br>Staple is too long for wood hardness. | Increase the air pressure.<br>Adjust the depth of drive.<br>Use staples of the length that is appropriate for the wood. |
| Product operates properly, but fasteners are driven too deep. | Air pressure is too high.<br>Depth of drive is too deep. | Decrease the air pressure.<br>Adjust the depth of drive. |
| Product jams frequently. | Staples are incorrect.<br>Staples are damaged.<br>Magazine is loose.<br>Magazine is dirty. | Verify that the size of staples is correct.<br>Replace the staples.<br>Tighten the screws.<br>Clean the magazine. |
| Product stops and LED work lights flash rapidly. | Battery is low or has no charge.<br>Product is hot. | Recharge the battery.<br>Allow Product to cool. |
| Product has charged battery and LED work lights flash slowly. | Product has malfunctioned. | Take the product to the nearest authorised repair centre. |
| Product operates properly, but fasteners are not driven fully. | Product is too cold (less than 5°C). | Warm the product up to the operating temperature, either by storing in the correct environment or by firing test shots into spare material. |
| Product does not operate. | Magazine is empty/very low. | Refill the magazine. |
| Product does not operate. | Stapling process has been interrupted (by releasing the trigger mid-way through the process). | Remove the battery and replace to reset the system. |
| Product does not operate. | Trigger or work piece contact has been held for too long without activating the nail firing process. | Release the trigger then activate again. |

## PRODUCT SPECIFICATIONS

| | |
|---|---|
| Stapler | |
| Model | R18GS18 |
| Voltage | 18 V ⎓ |
| Magazine capacity (number of staples) | 100 |
| Fastener type: staples | |
| Length | 10 mm - 38 mm (3/8" - 1½") |
| Width | 5 mm - 6 mm (1/5" - 1/4") |
| Weight (According to EPTA procedure 01/2014) | 2.76 kg (1.3Ah) - 3.52 kg (9.0Ah) |
| Weight - excluding battery pack | 2.34 kg |
| Measured sound values determined according to EN 60745: | |
| A-weighted sound pressure level | $L_{pA}$ = 85.5 dB(A) |
| Uncertainty K | 3 dB(A) |
| A-weighted sound power level | $L_{WA}$ = 96.5 dB(A) |
| Uncertainty K | 3 dB(A) |
| Wear ear protectors. | |
| The vibration total values (triaxial vector sum) determined according to EN 60745: | |
| Vibration emission value | $a_h$ = 2.7 m/s² |
| Uncertainty K | 1.5 m/s² |

## BATTERY AND CHARGER

| Model | Compatible battery pack (not included) | Compatible charger (not included) |
|---|---|---|
| Lithium-Ion | RB18.. | BCL1418..H<br>RC18.. |

⚠ **WARNING!** The declared vibration total values and the declared noise emission values given in this instruction manual have been measured in accordance with a standardised test and may be used to compare one tool with another. They may be used for a preliminary assessment of exposure.

The declared vibration and noise emission values represent the main applications of the tool. However, if the tool is used for different applications, used with different accessories, or poorly maintained, the vibration and noise emission may differ. These conditions may significantly increase the exposure levels over the total working period.

An estimation of the level of exposure to vibration and noise should take into account the times when the tool is turned off or when it is running idle. These conditions may significantly reduce the exposure level over the total working period.

Identify additional safety measures to protect the operator from the effects of vibration and noise, such as maintaining the tool and the accessories, keeping the hands warm (in case of vibration), and organising work patterns.

## RYOBI® WARRANTY APPLICATION CONDITIONS

In addition to any statutory rights resulting from the purchase, this product is covered by a warranty as stated below.

1. The warranty period is 24 months for consumers and commences on the date the product was purchased. This date has to be documented by an invoice or other proof of purchase. The product is designed and dedicated to consumer and private use only. So there is no warranty provided in case of professional or commercial use. This warranty applies only on new products.
2. There is a possibility to extend for a part of the range of power tools (AC/DC) the warranty period over the period described above using the registration on the www.ryobitools.eu website. The eligibility of products for extended warranty is clearly displayed in stores and / or on packaging and is contained within the product documentation. The end user is required to register his/her newly-acquired products online within 30 days from the date of purchase. The end user may register for the extended warranty in his/her country of residence if listed on the online registration form where this option is valid. Furthermore, end users must give their consent to the storage of their personal data that is required to be entered online. They must also accept the terms and conditions. The registration confirmation receipt, which is sent out by e-mail, and the original invoice showing the date of purchase will serve as proof of the extended warranty.
3. The warranty covers all defects of the product during the warranty period due to faults in workmanship or material at the purchase date. The warranty is limited to repair and/or replacement and does not include any other obligations including but not limited to incidental or consequential damages. The warranty is not valid if the product has been misused, used contrary to the instruction manual, or has been incorrectly connected to a power supply. This warranty does not apply to:
   – any damage to the product that is the result of improper or lack of maintenance
   – any product that has been altered or modified
   – any product where original identification (trade mark, serial number) markings have been defaced, altered or removed
   – any damage caused by non-observance of the instruction manual
   – any product not displaying the CE approval mark on the rating plate
   – any product that has been attempted to be repaired by a non-authorised warranty service centre or without prior authorisation by Techtronic Industries
   – any product connected to improper power supply (amps, voltage, frequency)
   – any damage caused by external influences (water, chemical, physical, shocks) or foreign substances
   – normal wear and tear spare parts
   – inappropriate use, overloading of the tool
   – use of non-approved accessories or parts
   – Power tool accessories provided with the tool or purchased separately, including but not limited to screw driver bits, drill bits, abrasive discs, sand paper and blades, lateral guide, etc.
   – Components (parts and accessories) subject to natural wear and tear, including but not limited to service & maintenance kits, carbon brushes, bearings, chuck, SDS drill bit attachment or reception, power cord, auxiliary handle, transport carry case, sanding plate, dust bag, dust exhaust tube, felt washers, impact wrench pins & springs, etc.
4. For servicing, the product must be sent or presented to a RYOBI authorised service station listed for each country in the following list of service station addresses. In some countries your local RYOBI dealer undertakes to send the product to the RYOBI service organisation. When sending a product to a RYOBI service station, the product should be safely packed without any dangerous contents such as petrol, marked with sender's address and accompanied by a short description of the fault.
5. A repair / replacement under this warranty is free of charge. It does not constitute an extension or a new start of the warranty period. Exchanged parts or products become our property. In some countries delivery charges or postage will have to be paid by the sender. Your statutory rights arising from the purchase of the product remain unaffected
6. This warranty is valid in the European Community, Switzerland, Iceland, Norway, Liechtenstein, Turkey, Russia and the United Kingdom. Outside these areas, please contact your authorised RYOBI dealer to determine if another warranty applies.

## AUTHORISED SERVICE CENTRES

Any request or issue with the product can be addressed to your local authorised service centres (visit www.ryobitools.eu) or directly to: Techtronic Industries GmbH, Max Eyth Straße 10, 71364 Winnenden, Germany. Please state the serial number and product type printed on the label.

## EC DECLARATION OF CONFORMITY

Manufacturer: Techtronic Industries GmbH
Max-Eyth-Straße 10, 71364 Winnenden, Germany

*We declare as the manufacturer under our sole responsibility that the product mentioned below*

Stapler
Brand: RYOBI
Model number: R18GS18
Serial number range: 47565901000001 - 47565901999999

*fulfills all the relevant provisions of the following European Directives, European Regulations and harmonised standards.*

2006/42/EC, 2014/30/EU, 2011/65/EU
EN 55014-1:2017+A11:2020, EN 55014-2:2015,
EN 60745-1: 2009+A11:2010, EN 60745-2-16:2010
EN IEC 63000:2018

Todd Chipner
Vice President, Quality – Ryobi Asia
Winnenden, Mmm. dd, 2021

Authorised to compile the technical file:
Alexander Krug, Managing Director
Techtronic Industries GmbH
Max-Eyth-Straße 10, 71364 Winnenden, Germany

## GB-DECLARATION OF CONFORMITY

Manufacturer: Techtronic Industries GmbH
Max-Eyth-Straße 10, 71364 Winnenden, Germany

*We declare as the manufacturer under our sole responsibility that the product mentioned below*

Stapler
Brand: RYOBI
Model number: R18GS18
Serial range: 47565901000001 - 47565901999999

*fulfills all the relevant provisions of the following Regulations: S.I. 2008/1597 (as amended), S.I. 2016/1091 (as amended), S.I. 2012/3032 (as amended) and that the following designated standards have been used:*

BS EN 55014-1:2017+A11:2020, BS EN 55014-2:2015,
BS EN 60745-1: 2009+A11:2010, BS EN 60745-2-16:2010
BS EN IEC 63000:2018

Todd Chipner
Vice President, Quality - Ryobi Asia
Winnenden, Mmm. dd, 2021

Authorised to compile the technical file:
Alexander Krug, Managing Director
Techtronic Industries GmbH
Max-Eyth-Straße 10, 71364 Winnenden, Germany

*RYOBI is a trade mark of Ryobi Limited,*
*and is used under license.*
*© 2021 Techtronic Cordless GP.*

For technical review, sent 03 Jun 2021

For technical review, sent 03 Jun 2021

**Techtronic Industries GmbH**
Max-Eyth-Straße 10,
71364 Winnenden, Germany

**Techtronic Industries (UK) Ltd**
Fieldhouse Lane
Marlow Bucks SL7 1HZ
UK

9xxxxxxxx-01