BAREBONE
XPC slim
DS50U
Intel Celeron 7305 Processor

FANLESS SLIM PC WITH INTEGRATED ULV PROCESSOR IN INDUSTRIAL DESIGN

The DS50U-series is a fanless slim PC with a robust 1.3-litre metal chassis and exceptional connectivity. It supports two digital video outputs for UHD/4K displays and one traditional D-Sub/VGA connector. The built-in Intel Gen 12/13 processor provides ample performance for playback of 2160p/60 videos. Installation of components goes straight forward, as there is plenty of interior space for two DDR5 memory modules, one 2.5" drive and two M.2-2280 SSD cards. Optionally, an 4G/5G module can be fitted in the second M.2 slot using the optional WWN04 accessory. Thanks to its passive cooling, the system is virtually maintenance-free and is approved for 24/7 nonstop operation. It is big on performance, yet extremely energy-efficient. The Shuttle XPC slim Barebone DS50U series is an ideal platform for professional applications such as digital signage, POS, Kiosk, Thin Client, Office PC and Multimedia.

FANLESS COOLING · SUPPORTS 64GB DDR5 · HDMI 2.0b · DISPLAY-PORT 1.4 · SUPPORTS 2x M.2 SSDs · 2.5" HDD/SSD SUPPORT · DUAL LAN (2.5G+1G) · VESA MOUNT · WLAN / 4G/5G OPTIONAL · MAX.. 40 °C · REMOTE POWER OPT. · 24/7 SUPPORT

SLIM DESIGN
■ Slim 1.3-litre metal chassis, black ■ Dimensions: 20 x 16.5 x 3.95 cm (LWH) ■ Including Stand and VESA mount (75/100 mm) ■ Supports 24/7 Nonstop Operation ■ Operating temperature: 0~40 °C (non-condensing)

OPERATING SYSTEM
■ An operating system is not included
■ Supports Windows 10/11 (64-bit) and Linux (64-bit)

PROCESSOR
■ Intel Celeron 7305 processor (Intel Core Gen. 12 "Alder Lake-U")
■ Processor cores: 1x P-cores, 4x E-cores, TDP: 15W, Cache: 8 MB
■ Fanless heatpipe cooling system

GRAPHICS
■ Integrated Intel UHD graphics with 48 execution units (EUs)
■ Supports three independent displays

MEMORY SUPPORT
■ 2x 262-pin SO-DIMM slot ■ Supports DDR5-4800 ■ max. 2x 32 GB

STORAGE – M.2 / 2.5"
■ Two M.2-2280M slots:
1) supports one M.2 SSD card with PCIe 4.0 x4 NVMe
2) supports one M.2 SSD card with SATA or 4G/5G-kit (WWN04)
Two thermal pads included
■ M.2-2230E slot supports optional WLAN function
■ One 2.5" bay for SATA hard disk or SSD

CONNECTORS
■ HDMI 2.0b ■ DisplayPort 1.4 ■ VGA ■ 2x audio (line out, mic)
■ 2x USB 3.2 Gen2 (10 Gbps) ■ 4x USB 3.2 Gen1 (5 Gbps) ■ 2x USB 2.0
■ 2x Intel LAN (2.5G + 1G) ■ 1x COM port (1x RS232) ■ Connector for external power button ■ "Always on" Jumper ■ DC-input 12 V or 19 V

POWER SUPPLY
■ External 90W/19V power adapter (also supports 12 V power adapters)

OPTIONAL ACCESSORIES
■ WLAN Module (WLN- M1) ■ 4G/5G-kit (WWN04)
■ Rackmount kit (PRM01) ■ Cable for external power button (CXP01)
■ DIN-Rail mounting kit (DIR01) ■ 2nd COM port RS232 (PCP11)

8 87993 00657 4

MODELS OF THE DS50U SERIES

Product	Processor	Intel Generation	P-Cores / Threads	E-Cores / Threads	L3 Cache	RAM Clock Rate	Graphics clock max.	EUs	UPC Code
DS50U	Intel Celeron 7305	Gen 12	1 / 1	4 / 4	8 MB	DDR5-4800	1100 MHz	48	887993006574
DS50Ux	Intel U300 Processor	Gen 13	1 / 2	4 / 4	8 MB	DDR5-5200	1100 MHz	48	n.a. (project order only)
DS50U3	Intel Core i3-1315U	Gen 13	2 / 4	4 / 4	10 MB	DDR5-5200	1250 MHz	64	887993006192
DS50U5	Intel Core i5-1335U	Gen 13	2 / 4	8 / 8	12 MB	DDR5-5200	1250 MHz	80	887993006185
DS50U7	Intel Core i7-1355U	Gen 13	2 / 4	8 / 8	12 MB	DDR5-5200	1300 MHz	96	887993006178

Front and Back Panel

Front panel

1. 2x USB 3.2 Gen 2 port (red, 10 Gbps)
2. 4x USB 3.2 Gen 1 port (blue, 5 Gbps)
3. LED indicator for power state
4. LED indicator for storage activity
5. Power button
6. Microphone input
7. Headphones output

Back panel

8. 4-pin connector (2.54 mm pitch)
   for external power button, Clear CMOS button and 5V DC voltage
9. 2x connector for optional WLAN antenna
10. DisplayPort 1.4
11. HDMI 2.0b port
12. COM port supports RS232/RS422/RS485
13. 2x USB 2.0 port (black)
14. RJ45 1G LAN port (1 Gbps, Intel i219)
15. RJ45 2.5G LAN port (2.5 Gbps, Intel i226)
16. DC-in connector for power adapter
    Supports 12V and 19V DC
17. D-Sub/VGA port for analog displays
18. 4x perforation for optional 4G/5G antennas
    (two perforations on both sides)

19. Hole for Kensington Lock
    (the lock-and-cable is not included)

20. VESA mount (two parts)

Mainboard

Bottom side

Open chassis

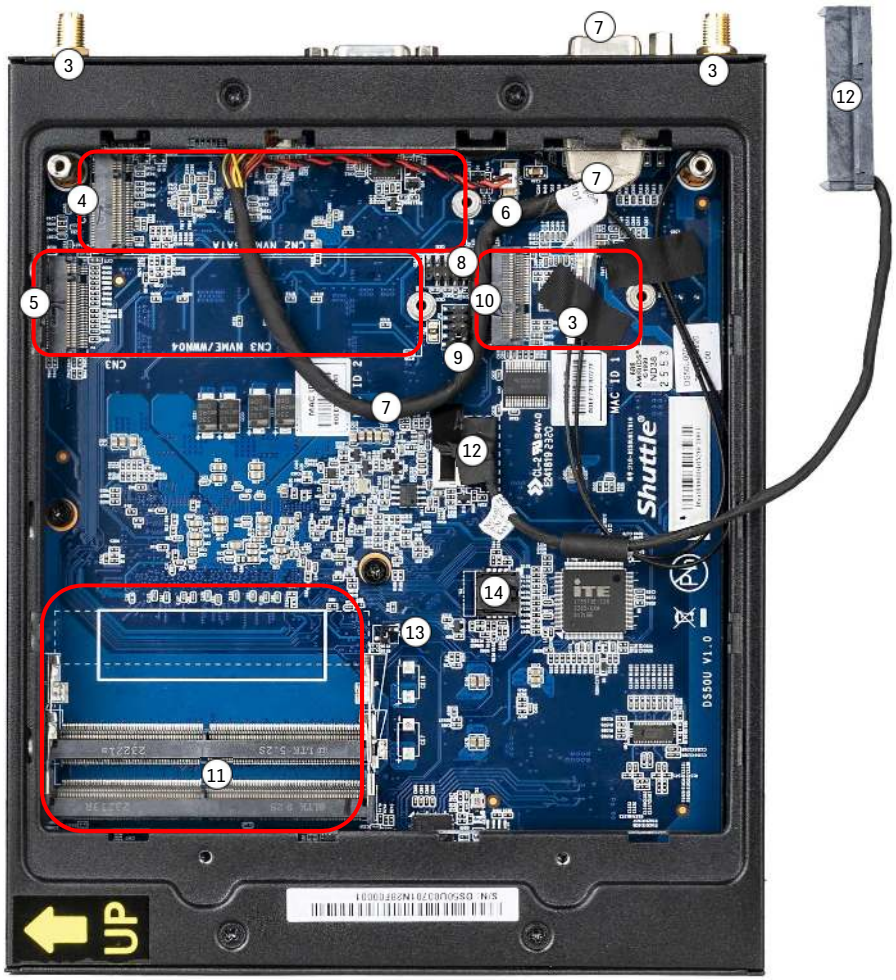

View inside

1. Bottom chassis cover
2. Drive rack for 2.5″ hard disk or SSD
3. 2x pre-installed WLAN cable for optional antennas and optional WLAN module
4. M.2-2280M slot supports one SSD card- with PCIe Gen4x4 or SATA *)
5. M.2-2280M slot supports either one SSD card or a 4G/5G card, which requires the optional WWN04 kit *)
6. Connector for the CMOS battery
7. D-Sub/VGA port with cable to the onboard connector
8. Onboard RS232 COM-Port (2x5-pin header)
9. Jumper setting for COM port configuration
10. M.2-2230E slot for optional WLAN module
11. 2x SO-DIMM memory slot (262-pin) supports DDR5 RAM modules
12. SATA/power connector for the 2.5″ hard disk or SSD
13. Always-Power-On jumper (JP9)
14. Socket with Flash EPROM for the Firmware

*) Possible configurations for the M.2-2280 slots		
1	2	3
M.2-2280 SSD card (SATA)	M.2-2280 SSD card (PCIe/NVMe)	M.2-2280 SSD card (SATA)
M.2-2280 SSD card (PCIe/NVMe)	WWN04 kit with 4G/5G card (opt.)	WWN04 kit with 4G/5G card (opt.)

REQUIRED COMPONENTS

The following components need to be added to make it a fully-configured Mini PC

Shuttle XPC slim Barebone DS50U
with opened chassis

1 **M.2-2280 SSDs**
Supports one NVMe M.2-2280 SSD card
Supports one SATA M.2-2280 SSD card
(The second M.2-2280 slot can also be used for a 4G/5G function. The optional WWN04 accessory kit is required, in order to support 4G/5G adapter cards and a Nano SIM card.)

2 **Memory Modules**
Supports up to two SO-DIMM memory modules DDR5-4800 (or higher), max. 32 GB each

3 **Optional Wireless LAN**
Supports two WLAN antennas and a WLAN card in M.2-2230 format
(e.g. WLAN accessory WLN-M1)

4 **2.5" Storage Drive**
Supports one SATA hard disk (max. height: 9.5 mm) or Solid State Disk (SSD)

5 **Operating System**
Supports Windows 10/11 (64-bit) or Linux (64-bit)

OPTIONAL ACCESSORIES FROM SHUTTLE

WLAN-Accessory WLN-M1
M.2-2230 card supports WLAN-ax and Bluetooth including 2 antennas

Kit for 4G/5G Adapter WWN04
allows the installation of an 4G/5G card and a nano SIM card (occupies one M.2-2280 slot). Including 4 antennas, which can be installed in addi-ton to the WLAN antennas.
Note: The 4G/5G card and SIM card are not included.

COM Port Adapter PCP11
If two COM ports are required, the existing VGA port may be removed and replaced by PCP11 instead.

Cable CXP01
Cable for external push button switch (without button)

DIN-Rail Kit DIR01
This mounting kit allows the in-stallation on a standard 35 mm DIN-Rail

Rack Mount Kit PRM01
2U front plate to install up to two 1.3L Shuttle XPCs in a 19" cabinet.

Shuttle Product Comparison

MODEL	DS50U Series	DS20U(V2) Series
Processor	**Intel Gen. 12/13 "Alder Lake-U/Raptor Lake-U"**, TDP= 15W, Intel 7 / 10 nm Technology **DS50U:** Celeron 7305 (Gen. 12) **DS50U3:** Core i3-1315U (Gen. 13) **DS50U5:** Core i5-1335U (Gen. 13) **DS50U7:** Core i7-1355U (Gen. 13)	**Intel Gen. 10 "Comet Lake-U"**, TDP= 15W, 14 nm Technology **DS20U(V2):** Celeron 5205U **DS20U3(V2):** Core i3-10110U **DS20U5(V2):** Core i5-10210U **DS20U7(V2):** Core i7-10510U
RAM Suppport	2x SO DIMM, 262-pins max. 2x 32 GB DDR5-5200 (or higher) for DS50U (Celeron 7305): DDR5-4800	2x SO DIMM, 260-pins max. 2x 32 GB DDR4-2400/2666 (or higher)
2.5" bay	Supports 2.5" SATA drive max. height: 9.5 mm	Supports 2.5" SATA drive max. height: 12.5 mm
M.2-2280 slot(s)	1) M.2-2280 supports NVMe/PCIe Gen4 X4 & SATA*) 2) M.2-2280 supports NVMe/PCIe Gen4 X4	M.2-2280 supports NVMe/PCIe Gen2 X4 and SATA
Audio	Realtek ALC888S	Realtek ALC897/ALC662
Dual LAN	1) Intel i226 (2.5 Gbps) 2) Intel i219 (1 Gbps)	**DS20U-Series:** Intel i211 (1 Gbps) + i219LM (1 Gbps) **DS20UV2-Series:** Intel i225 (2.5 Gbps) + i219 (1 Gbps)
WLAN	M.2-2230E slot for optional WLAN module pre-mounted antenna cables, but no antennas	M.2-2230E slot for optional WLAN module pre-mounted antenna cables, but no antennas
Front Panel	On/Off button Power LED, HDD LED 4x USB 3.2 Gen 1 (blue) 2x USB 3.2 Gen 2 (red) 2x Audio ports	On/Off button Power LED, HDD LED 2x USB 3.2 Gen 2 (red) **) 4x USB 2.0 (black) 2x Audio ports SD card reader
Back Panel	HDMI 2.0b DisplayPort 1.4 D-Sub/VGA 2x USB 2.0 (black) 2x RJ45 LAN (2.5G + 1G) 1x COM (RS232/RS422/485) 4-pin power on connector	HDMI 2.0a DisplayPort 1.2 D-Sub/VGA 2x USB 3.2 Gen 2 (red) **) 2x RJ45 LAN (see above) 1x COM (RS232/RS422/485) 4-pin power on connector
DC-in port	Supports 12 V and 19 V	Supports 12 V and 19 V
Power Adapter	90 W (19V, 4.74 A) 3-pin AC plug with earthed safety plug	65 W (19V, 3.42 A) 3-pin AC plug with earthed safety plug
Vertical Stand	included	included
VESA Mount	included	included
Optional Accessories	**CXP01**: cable for ext. power button **PRM01**: 2U rack-mount kit **DIR01**: DIN-Rail mounting kit **PCP11:** RS232 COM port instead of VGA **WWN04**: 4G/5G kit for the second M.2-2280 slot **WLN-M1:** WLAN kit with external antennas	**CXP01**: cable for ext. power button **PRM01**: 2U rack-mount kit **DIR01**: DIN-Rail mounting kit **PCP11:** RS232 COM port instead of VGA **WWN03**: 4G/LTE kit for 2.5" drive bay **WLN-M1:** WLAN kit with external antennas
Front View		
Back View		

***)** Two M.2-2280 slots support one M.2 SSD with PCIe/NVMe interface and one M.2 SSD with SATA interface
****)** Note: DS20U(V2) with Celeron processor supports USB 3.2 Gen 1 (blue connector) only

SHUTTLE XPC SLIM BAREBONE DS50U — SPECIFICATIONS

FANLESS AND SILENT	Passive cooling, no fan noise at all Perfect to be used in noise-sensitive environments Fanless, dust-free and thus virtually maintenance-free
24/7 NONSTOP OPERATION	This device is approved for 24/7 permanent operation. Requirements: - Free circulation of air amongst the PC must be guaranteed. - Ventilation holes must stay clear. - If a hard disk is installed, this must also be approved for permanent operation by its manufacturer
CHASSIS	Slim-PC with black steel chassis Without cooling fan, passive cooling only The bay for memory modules, 2.5" drive and M.2 cards can easily be accessed by removing the bottom chassis cover. Dimensions: 200 x 165 x 39.5 mm (LWH) = 1.3 litres Weight: 1.6 kg net and 2.3 kg gross Two holes for Kensington Lock and numerous threaded holes (M3) at both sides of the chassis
OPERATION POSITION	1) Vertical: Usual operating position with the supplied feet (DisplayPort output facing up). 2) VESA-mounted: The device can also be mounted behind an appropriate monitor using the supplied VESA mount kit. Note: From a thermal point of view horizontal operation is permitted. However, there are no rubber feet on the device. The maximum operating temperature is 35 °C then.
OPERATING SYSTEM	This barebone system comes without operating system. It is compatible with Windows 10/11 (64-bit) and Linux (64-bit).
PROCESSOR	Model: Intel Celeron 7305 Code name: Alder Lake-U (12th generation Intel Core) Performance-cores (P-Cores): 1 core (1 thread), clock rate: 1.1 GHz Efficient-cores (E-Cores): 4 cores (4 threads), clock rate: 0.9 GHz Smart-Cache (L3): 8 MB Base Power (PL1 TDP): max. 15 W Maximum Tjunction Temperature: 100 °C System-on-a-chip architecture (SoC) with integrated memory and graphics controller BGA1700 package - directly soldered onto the mainboard Lithography: Intel 7 process (10 nm Enhanced SuperFin)
INTEGRATED GRAPHICS	Intel UHD Graphics GPU clock frequency: max. 1100 MHz Execution Units (EUs): 48 Supports up to three independent screens: 1) DisplayPort 1.4 supports Ultra HD @ 60 Hz 2) HDMI 2.0b supports Ultra HD @ 60 Hz 3) D-Sub/VGA supports analog displays
MAINBOARD / BIOS	Proprietary Mainboard for the Shuttle DS50U series Supports resume after power failure [2] Supports Wake on LAN (WOL) Supports Power on by RTC Alarm Supports boot from M.2 SSD cards und USB devices AMI BIOS in 32 MByte EEPROM with SPI interface Supports hardware monitoring and Watchdog function Supports Unified Extensible Firmware Interface (UEFI) Supports Firmware-TPM (fTPM) Version 2.0
POWER ADAPTER	External 90 W power adapter (fanless) Input: 100~240 V AC, 50/60 Hz, max. 1.6 A Output: 19 V DC, max. 4.74 A, max. 90 W DC cable length: ca. 170 cm AC cable length: ca. 170 cm (3-pin Micky MM C6 and Schuko earthed safety plug)
DC INPUT CONNECTOR	DC Input Connector: 5.5 / 2.5 mm (outer/inner diameter) The DC-input of the computer supports an external power source with either 12V±5% or 19V±5%.

MEMORY SUPPORT	2x SO-DIMM slot with 262 pins Supports DDR5-4800 (PC5-38400) SDRAM at 1.1 V Supports memory modules with higher frequency rating Supports Dual Channel mode Supports a maximum of 32 GB per DIMM, maximum total size: 64 GB Supports two unbuffered DIMM modules (no ECC or registered) Two thermal pads for the RAM modules are included **[7]**
2.5" DRIVE BAY	2.5" Drive Bay with SATA connector Supports one Serial ATA hard disk or one SATA SSD drive in 6.35 cm / 2.5" format Device height: max. 9.5 mm Supports Serial-ATA III, 6 Gb/s (600 MB/s) bandwidth Supports Unified Extensible Firmware Interface (UEFI) Note: no Serial ATA cable is required.
TWO M.2-2280 SLOTS FOR SSD CARDS	This product features two M.2-2280 Key-M slots - it supports M.2 cards with a width of 22 mm and a length of 80 mm (type 2280) - one M.2 SSD card with PCIe/NVMe interface is supported - the second M.2 SSD card must have SATA interface - the second slot can also be used for the optional WWN04 kit to support a 4G/5G wireless network card The following configurations are supported:

M.2 Slot	Interface	Config 1	Config 2	Config 3
Slot 1	PCIe Gen 4 x4 and SATA 3.0	M.2 SSD card (SATA)	M.2 SSD card (PCIe/NVMe)	M.2 SSD card (SATA)
Slot 2	PCIe Gen 4 x4 and USB 3.2 Gen2 *)	M.2 SSD card (PCIe/NVMe)	optional WWN04 kit	optional WWN04 kit

*) the USB 3.2 interface can only be used with the Shuttle Accessory WWN04
Two thermal pads for the M.2 SSDs are included (size: 70 x 20 mm).

M.2-2230E SLOT FOR WLAN CARDS	Slot: M.2-2230 Type E Interfaces: PCI-Express Gen. 3.0 X1 und USB 2.0 Supports M.2 cards with a width of 22 mm and a length of 30 mm (type 2230) Two antenna cable are pre-installed. A WLAN expansion card in M.2-2230 format and two WLAN antennas are required for the WLAN function. Optional Shuttle accessory: WLN-M1
AUDIO	Audio Realtek® ALC888S High-Definition Audio Two analog audio connectors (3.5 mm) at the front panel: 1) 2 channel line out (headphones) 2) microphone input Digital multi-channel audio output: via HDMI and DisplayPort
DUAL LAN 2.5G AND 1G	Dual network with two RJ45 ports Used network chips: 1) left: Intel i219 Ethernet Controller supports 1.000 / 100 / 10 Mbps operation 2) right: Intel i226 Ethernet Controller supports 2.500 / 1.000 / 100 Mbps operation Supports WAKE ON LAN (WOL) Supports network boot by Preboot eXecution Environment (PXE)
FRONT PANEL CONNECTORS	4x USB 3.2 Gen 1 (max. 5 Gbps, blue) 2x USB 3.2 Gen 2 (max. 10 Gbps, red) Microphone input Audio Line-out (headphones) Power button Power LED (blue) HDD LED (yellow)
BACK PANEL CONNECTORS	DisplayPort 1.4 **[3]** HDMI 2.0b D-Sub/VGA 2x USB 2.0 (black) 2x Intel RJ45 LAN (left: 1 Gbps and right: 2.5 Gbps) Serial COM port (5V / 12V, switchable to RS232 / RS422 / RS485) [1] DC-input connector for external power adapter 4-pin connector (2.54 mm pitch) for power button, Clear CMOS and 5 V DC [4] 2x connector for external WLAN antennas

ALWAYS-ON JUMPER	By removing Jumper JP1 (please refer to the quick user guide), the system will start unconditionally once power is applied. **[2]**
SUPPLIED ACCESSORIES	Multi-language user guide Two metal feet with four screws M3 x 7 mm VESA mount for 75/100mm standard (two metal brackets) Four screws M3 x 7 mm (screws together VESA mount and PC) Four screws M4 x 10 mm (to fix the VESA mount to the external surface) Two screws M3 x 5 mm to mount a 2.5" storage in the bay Two screws M3 x 5 mm to mount M.2 cards 4x Thermal Pad for cooling of optional components: - 2x for M.2 SSD cards (ca. 70 x 20 x 4 mm) - 2x for RAM modules (ca. 50 x 15 x 2 mm and 60 x 20 x 1 mm) Driver DVD for Windows External 90W power adapter with power cord (with protective-earth contacts)
OPTIONAL ACCESSORIES	**PCP11:** adapter cable for the second COM port (replaces the VGA port) **CXP01:** adapter cable for external power button **WLN-M / WLN-M1:** WLAN module (supports WLAN and Bluetooth) with two external antennas and cables **PRM01:** 2U rack mount front plate for two Shuttle XPC slim **DIR01:** mounting kit for 35 mm DIN-Rail **WWN04:** 4G/5G kit with antennas - enables the use of an optional 4G/5G card in M.2 format and a nano SIM card
ENVIRONMENTAL SPECIFICATIONS	Operating temperature range: 0~40 °C **[5]** Relative humidity, non-condensing: 10~90 %
CONFORMITY & CERTIFICATIONS	EMI: CE, FCC, BSMI, RCM, VCCI Safety: CB, BSMI, cTUVus Other: RoHS, Energy Star, ErP This device is classed as a technical information equipment (ITE) in class B and is intended for use in living room and office. The CE-mark approves the conformity by the EU directives: (1) 2014/30/EU relating to electromagnetic compatibility (EMC) (2) 2014/35/EU relating to Electrical Equipment designed for use within certain voltage limits (LVD) (3) 2009/125/EC relating to eco design requirements for energy-related products (ErP)

Footnote:

[1] Jumper for COM port configuration
Pin 9 of the COM-Port is a multi-functional signal. Based on the Jumper JP2 configuration on the mainboard, it can be configured as Ring Indicator (RI) or external power supply with a voltage level of either 5 V or 12 V. Each COM port can be configured separately. The operating mode of COM 1 can be set to RS232, RS422 or RS485 in the BIOS. The second COM port (COM 2) supports RS232 mode only, and in the standard SKU of this product it is only available as an onboard connector on the mainboard. An appropriate adapter (e.g. the optional accessory PCP11) is required in order to provide this port as D-Sub connector at the back panel. In this case the VGA port cannot be used.

[2] Power on after power fail:
The BIOS setup provides a "Power-On after Power Fail" function that can be found under "Power Management Configuration". This function determines the PC's behaviour after power failure. As a matter of the nature of this function, it may fail after short power failures. This is why this product also comes with a hardware-based solution. By removing Jumper J9 (please refer to the quick user guide), the system will start unconditionally once power is applied.

[3] How to convert DisplayPort into HDMI/DVI
The DisplayPort output can be converted to HDMI or DVI by an additional, passive adapter cable. For example:
DELOCK 82590: 1 m, DisplayPort (male, 20p) to HDMI-A (male, 19p)
DELOCK 82435: 5 m, DisplayPort (male, 20p) to DVI-D (male, 24p)
The integrated graphics automatically detects the connected display and puts out the appropriate electric signal - either through DisplayPort (without an adapter) or HDMI/DVI (with an adapter).

However, a monitor with a DisplayPort connector cannot be connected to the HDMI port with a simple, passive adapter.

[4] Four-pin header at the back panel
This header allows for connecting an external power button.
It also provides 5 V DC voltage for external devices and the Clear CMOS function. Optional accessory: the adapter cable CXP01.

[5] Caution: For ambient temperatures higher than 35 °C we strongly recommend to use an SSD instead of an HDD

SHUTTLE XPC SLIM BAREBONE DS50U — Technical Drawing (1)

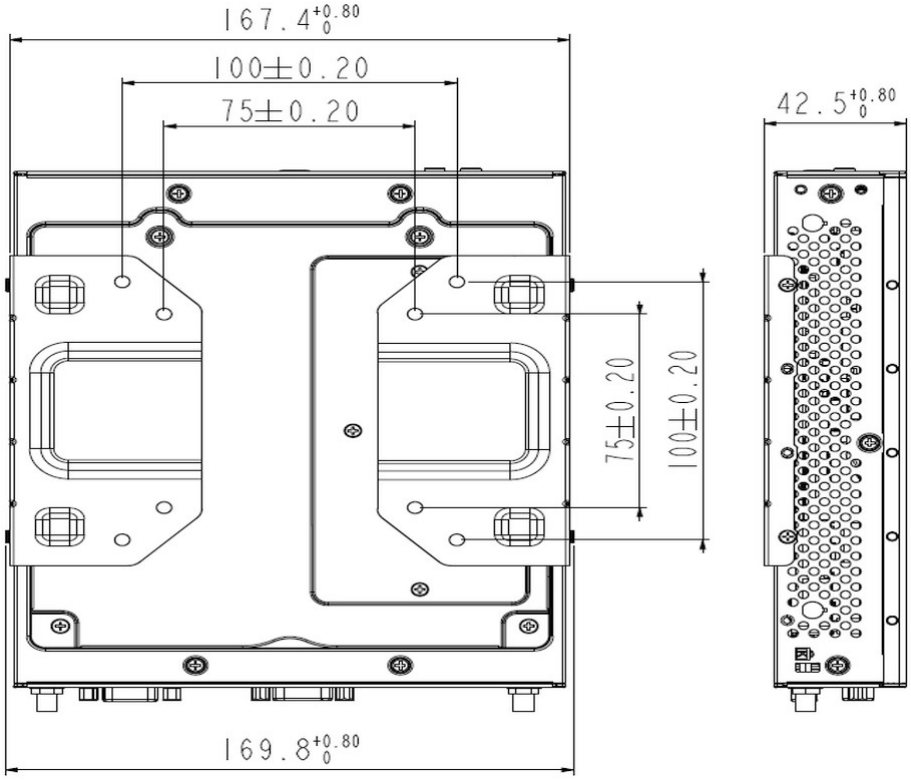

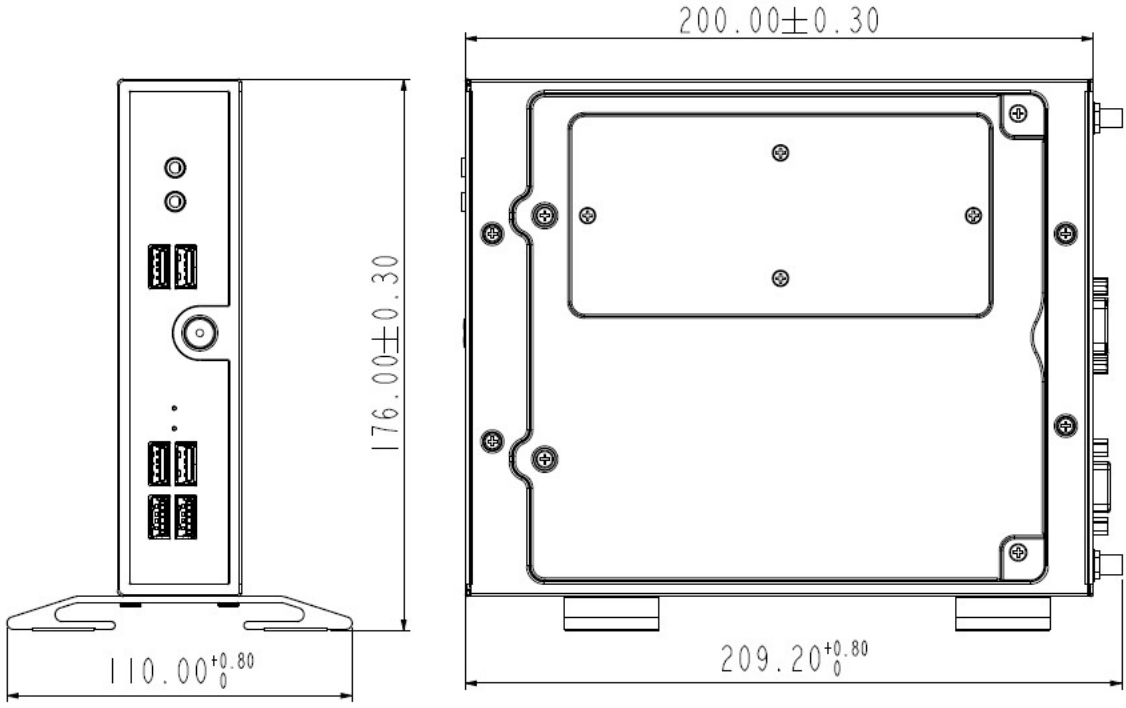

SHUTTLE XPC SLIM BAREBONE DS50U — Technical Drawing (2)

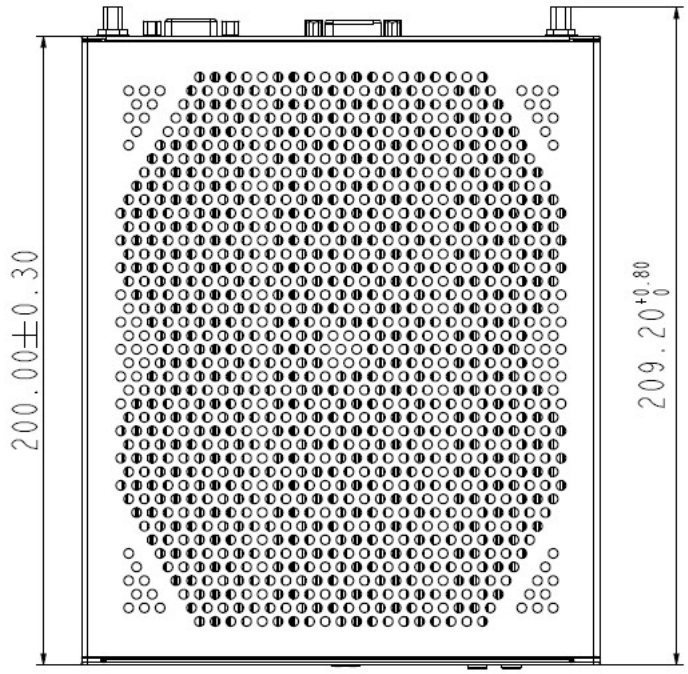

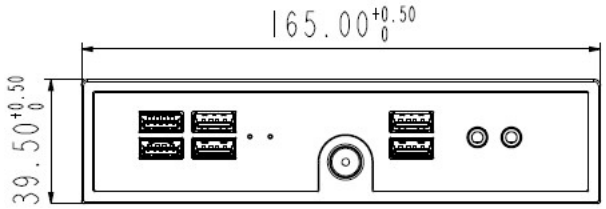

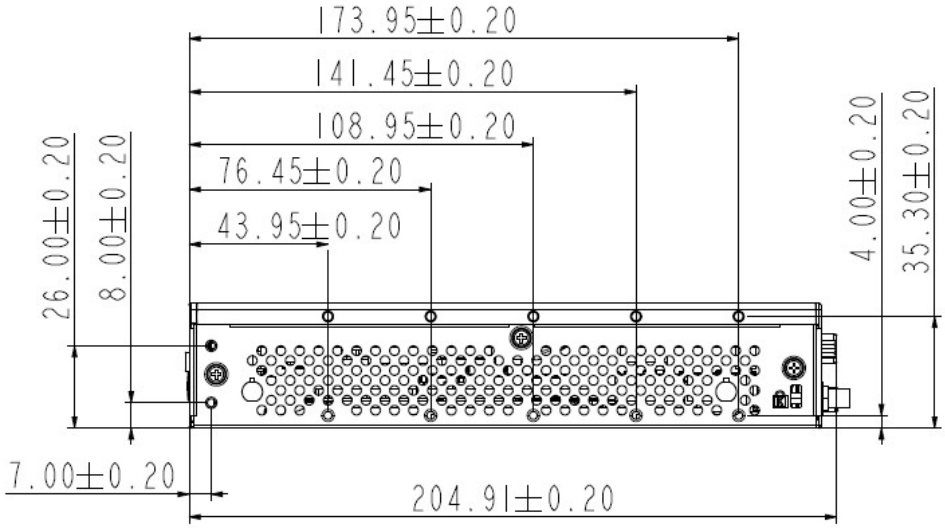

© 2024 Shuttle® Computer Handels-GmbH — All information subject to change without notice. Optional components and accessories are not included. Pictures for illustration purposes only.