Freezer 36

Multi Compatible Tower CPU Cooler

LIMITED 6 YEARS WARRANTY

General Specifications

Compatibility	Intel® LGA1851 | LGA1700 AMD® AM5 | AM4
PI | NNPI	250 | 234
TIM	MX-6 (0.8 g)
Warranty	6 Years
Operating Ambient Temperature	0–40 °C
Dimensions	104 (L) x 126 (W) x 159 (H) mm
Weight	890 g

Heatsink Specifications

Heatpipes	4x 6 mm Ø, Copper
Finnstack	59x 0.4 mm, Aluminium

Fan Specifications

General	2x P12 PWM PST
Speed	200–1800 rpm, PWM Controlled (0 rpm below 5 % PWM)
Bearing	Fluid Dynamic Bearing
Current | Voltage	0.10 A | 12 V DC
Cable Length	200 mm + 80 mm Splitter Cable
Connector	4-Pin PWM-Connector + 4-Pin Plug

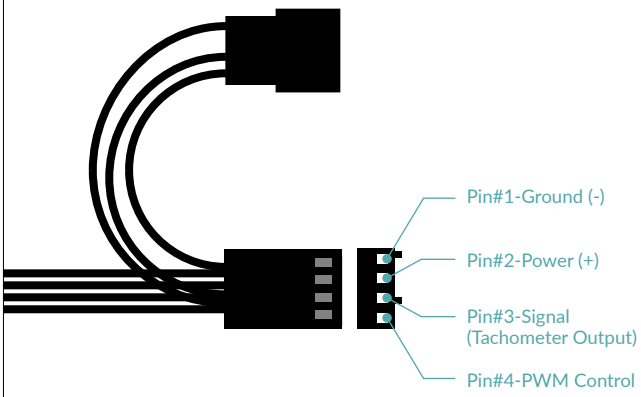

Shipping Information – Freezer 36

Box Dimension	190 (L) x 186 (W) x 117 (H) mm
Gross Weight	1230 g
SKU	ACFRE00121A
EAN	4895213704120
UPC	840033401937

Shipping Information – Freezer 36 (Black)

Box Dimension	190 (L) x 186 (W) x 117 (H) mm
Gross Weight	1230 g
SKU	ACFRE00123A
EAN	4895213704144
UPC	840033401951

Freezer 36

Multi Compatible Tower CPU Cooler

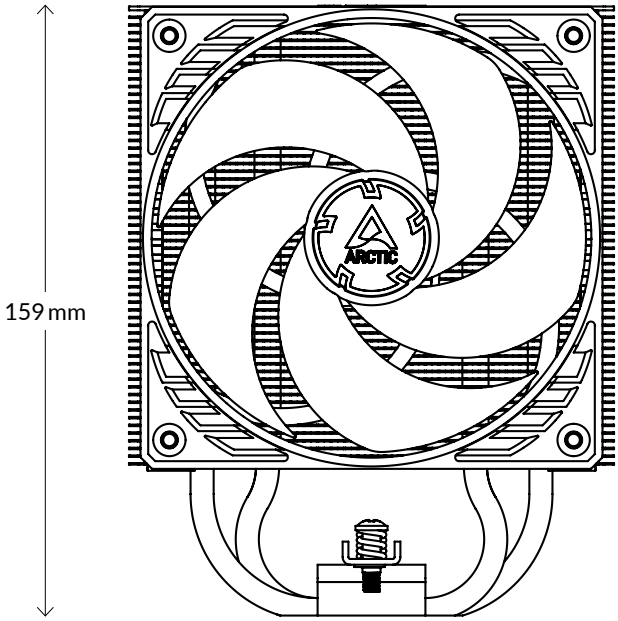

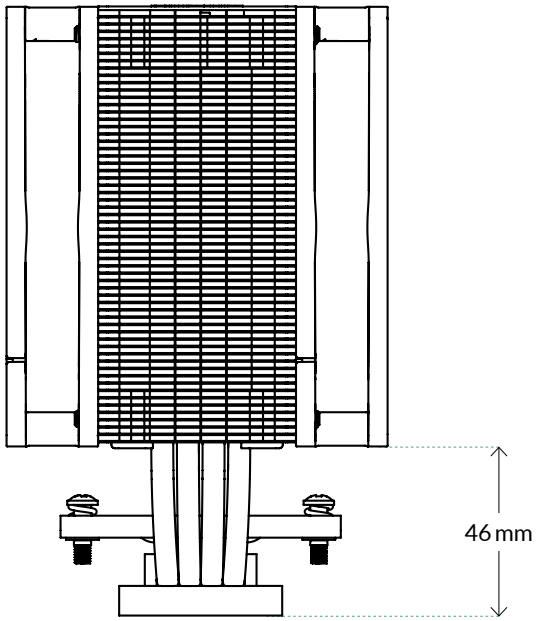

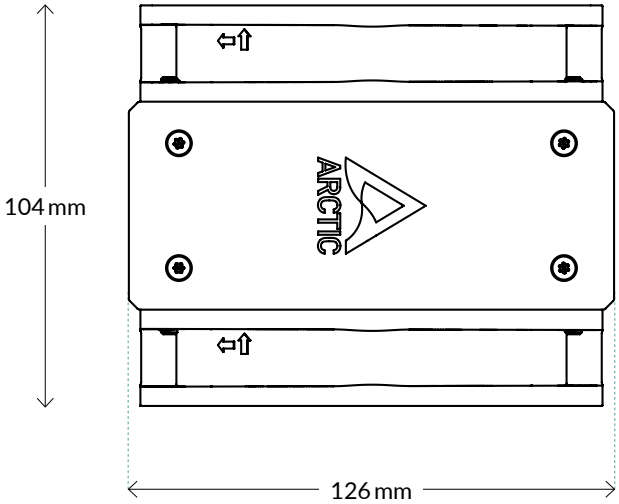

Carbon Neutral
green.arctic.de

All materials are compatible with RoHS requirements.

MORE INFORMATION

ARCTIC
arctic.de

MANUALS