MAG Series

OLED Monitor

MAG 321UP QD-OLED (3DD3)

User Guide

Contents

Getting Started 3
- Package Contents 3
- Installing the Monitor Stand 4
- Adjusting the Monitor 5
- Monitor Overview 6
- Connecting the Monitor to PC 8

OSD Setup 10
- Navi Key 10
- Hot Key 10

OSD Menus 11
- G.I. 12
- Gaming 13
- Professional 14
- Image 15
- Input Source 15
- PIP/PBP 16
- Navi Key 17
- Settings 17
- MSI OLED Care 19

Specifications 21

Preset Display Modes 23

Troubleshooting 25

Safety Instructions 26

TÜV Rheinland Certification 28

Regulatory Notices 29

Revision

V1.1, 2024/10

Getting Started

This chapter provides you with the information on hardware setup procedures. While connecting devices, be careful in holding the devices and use a grounded wrist strap to avoid static electricity.

Package Contents

Monitor	MAG 321UP QD-OLED
Documentation	Quick Start Guide
Accessories	Stand
	Stand Base with Screw(s)
	Screw(s) for Wall Mount Bracket(s)
	Power Cord
Cables	DisplayPort Cable (Optional)
	Ultra High Speed HDMI™ Cable (Optional)

Important

- *Contact your place of purchase or local distributor if any of the items is damaged or missing.*
- *Package contents may vary by country and model.*
- *The included power cord is exclusively for this monitor and should not be used with other products.*

Installing the Monitor Stand

1. Leave the monitor in its protective packaging. Align the stand to the monitor groove.
2. Push the stand towards the monitor groove until it locks in place.
3. Connect the base to the stand and tighten the base screws to secure the base.
4. Make sure the stand assembly is properly installed before setting the monitor upright.

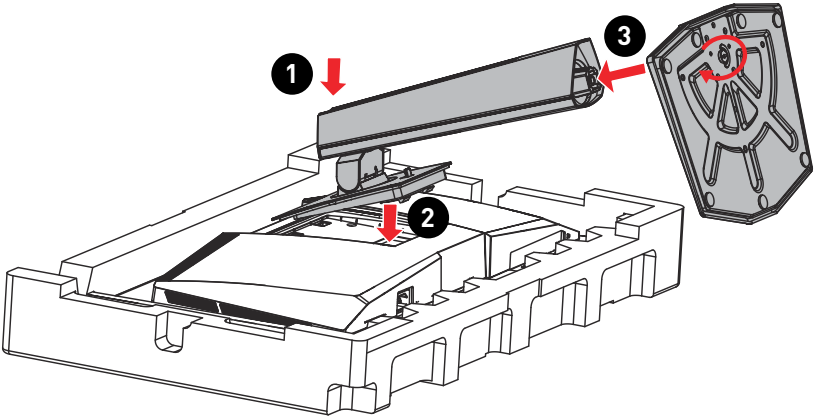

Important

- *Place the monitor on a soft, protected surface to avoid scratching the display panel.*
- *Do not use any sharp objects on the panel.*
- *The groove for installing the stand bracket can also be used for wall mount. Please contact your dealer for proper wall mount kit.*

Adjusting the Monitor

This monitor is designed to maximize your viewing comfort with its adjustment capabilities.

Important

- *Avoid touching the display panel when adjusting the monitor.*
- *Please slightly tilt the monitor backwards before pivoting it.*

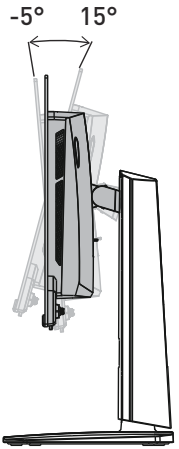

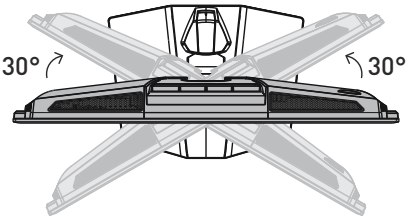

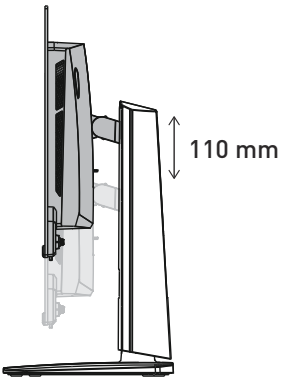

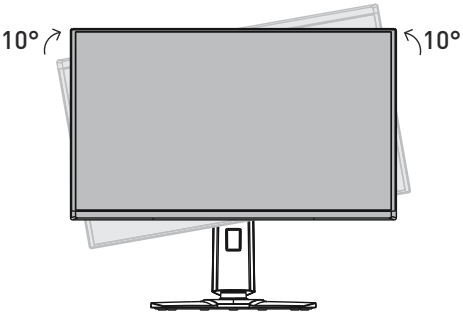

Monitor Overview

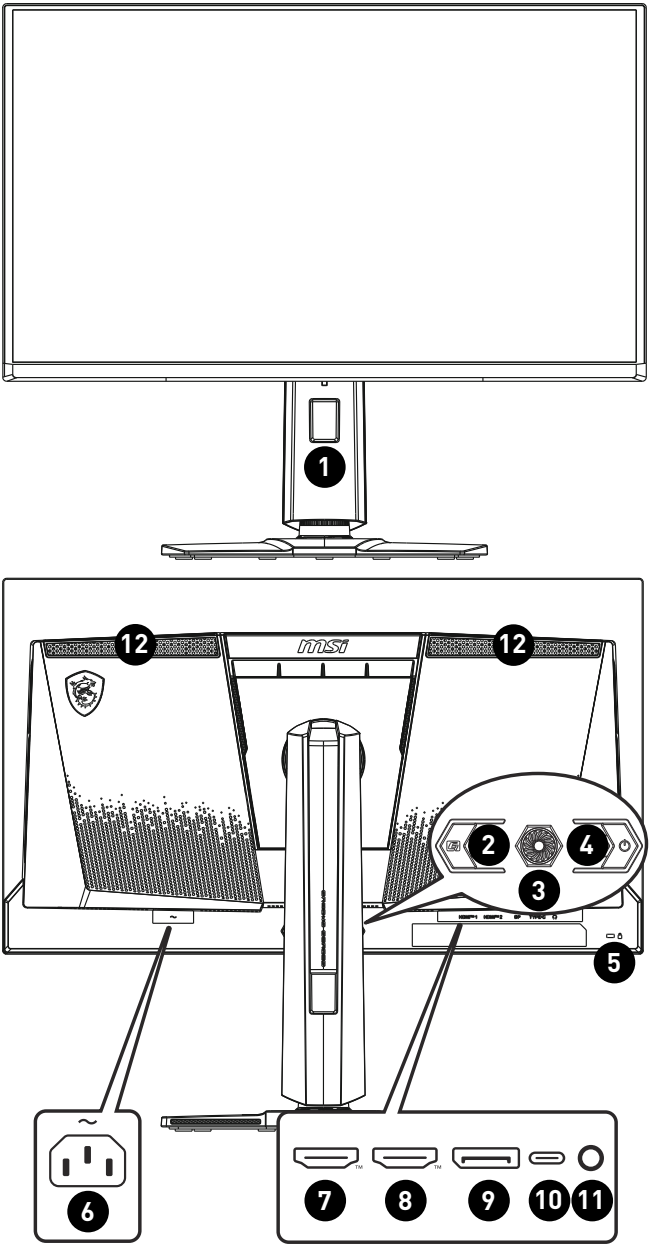

1	**Cable Routing Hole**
2	**Macro Key** To activate OSD Application.
3	**Navi Key**
4	**Power Button**
5	**Kensington Lock**
6	**Power Jack**
7	**HDMI™ Connector** Supports HDMI™ CEC, 3840x2160@165Hz as specified in HDMI™ 2.1. ***Important*** *To ensure optimal performance and compatibility, please use only HDMI™ cables certified with the official HDMI™ logo when connecting this monitor. For more information, please visit https://www.hdmi.org/resource/cables.*
8	**HDMI™ Connector** Supports 3840x2160@165Hz as specified in HDMI™ 2.1. ***Important*** *To ensure optimal performance and compatibility, please use only HDMI™ cables certified with the official HDMI™ logo when connecting this monitor. For more information, please visit https://www.hdmi.org/resource/cables.*
9	**DisplayPort** Supports 3840x2160@165Hz as specified in DisplayPort 1.4.
10	**USB Type-C Port** This port supports DisplayPort Alternate (DP Alt) Mode and up to 5V/3A (15W) power delivery. ***Important*** *Your USB-C signal source and cable must support DisplayPort Alternate Mode to enable video output to the monitor.*
11	**Headphone Jack**
12	**Ventilator** The ventilator on the enclosure is used for air convection and to prevent the equipment from overheating. Do not cover the ventilator. Please remove the protective film.

Connecting the Monitor to PC

1. Turn off your computer.
2. Connect the video cable from the monitor to your computer.
3. Connect the power cord to the monitor power jack. (Figure A)
4. Plug the power cord into the electrical outlet. (Figure B)
5. Turn on the monitor. (Figure C)
6. Power on the computer and the monitor will auto detect the signal source.

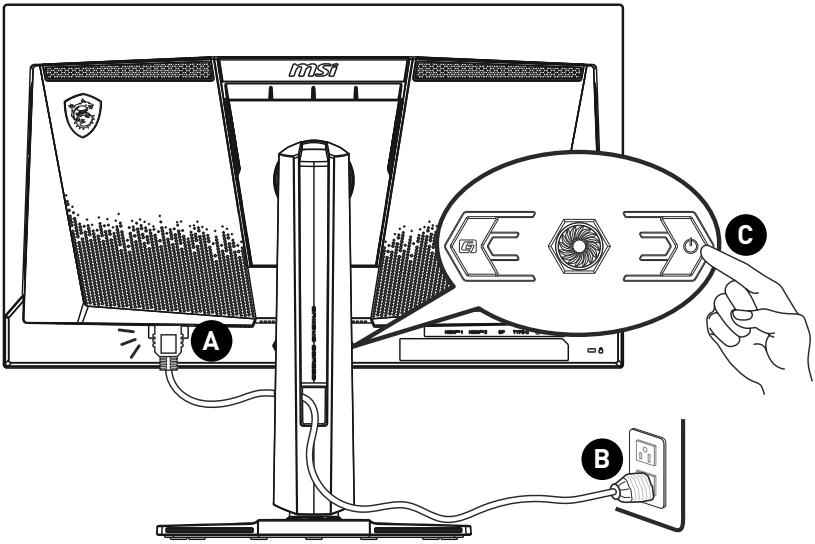

Important

Please remove the protective films from the display panel and ventilation ports before use to optimize performance and prevent overheating.

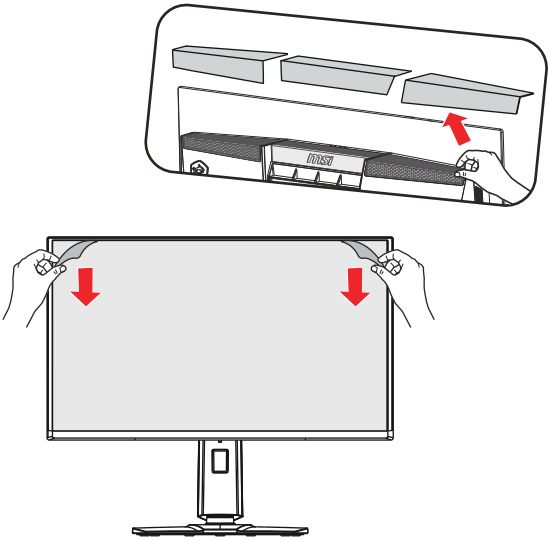

OSD Setup

This chapter provides you with essential information on OSD Setup.

Important

All information is subject to change without prior notice.

Navi Key

The monitor comes with a Navi Key, a multi-directional control that helps navigate the On-Screen Display (OSD) menu.

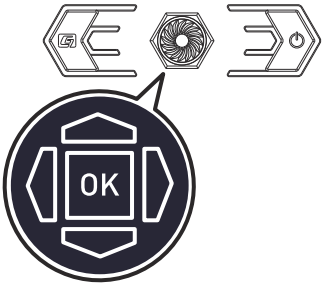

Up/Down/Left/Right:

- selecting function menus and items
- adjusting function values
- entering into/exiting from function menus

Press (OK):

- launching the On-Screen Display (OSD)
- entering submenus
- confirming a selection or setting

Hot Key

- Users may enter into preset function menus by moving the Navi Key up, down, left or right when the OSD menu is inactive.
- Users may customize their own Hot Keys to enter into different function menus.

OSD Menus

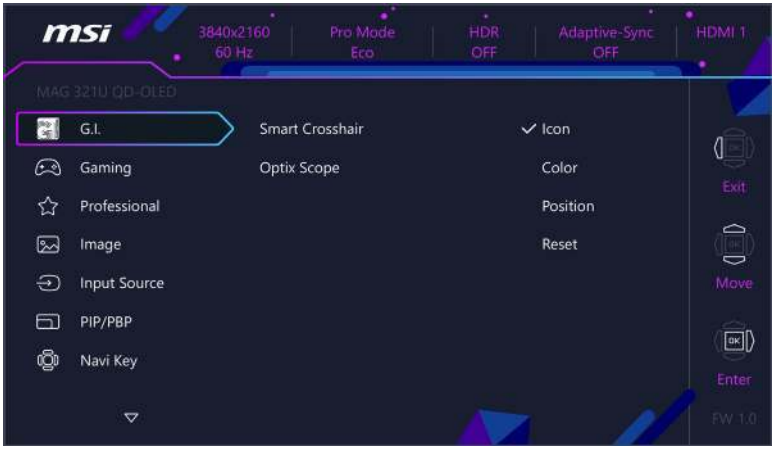

Important

The following settings will be grayed out when HDR signals are received:

- *Night Vision*
- *AI Vision*
- *Low Blue Light*
- *Brightness*
- *Contrast*
- *Color Temperature*
- *Optix Scope*
- *PIP/PBP*

G.I.

1st Level Menu	2nd/3rd Level Menu		Description
Smart Crosshair	Icon	None	• Through AI algorithm, this function enhances the visibility of in-game crosshair. • Users can select the color and position of the crosshair.
	Color	White	
		Red	
		Auto	
	Position		
	Reset		
Optix Scope	Scope Size	Small	• The center point will zoom in when Optix Scope is enabled, user can adjust the details through the "Scope Size" and "Scope Ratio" settings. • Smart Crosshair and Optix Scope can be enabled at the same time. • Activating Optix Scope will affect: **Affected Function** / **Function Status** » Adaptive-Sync » PIP/PBP — Set to OFF » Screen Size 1:1 — Set to Auto
		Medium	
		Large	
	Scope Ratio	x1.5	
		x2	
		x3	
	OFF		
	ON		

Gaming

<table>
<tr><th>1st Level Menu</th><th colspan="2">2nd/3rd Level Menu</th><th>Description</th></tr>
<tr><td rowspan="6">Game Mode</td><td colspan="2">Premium Color</td><td rowspan="6">• Use Up or Down Button to select and preview mode effects.
• Press the OK Button to confirm and apply your mode type.</td></tr>
<tr><td colspan="2">User</td></tr>
<tr><td colspan="2">FPS</td></tr>
<tr><td colspan="2">Racing</td></tr>
<tr><td colspan="2">RTS</td></tr>
<tr><td colspan="2">RPG</td></tr>
<tr><td rowspan="5">Night Vision</td><td colspan="2">OFF</td><td rowspan="5">• This function optimizes background brightness and is recommended for FPS games.</td></tr>
<tr><td colspan="2">Normal</td></tr>
<tr><td colspan="2">Strong</td></tr>
<tr><td colspan="2">Strongest</td></tr>
<tr><td colspan="2">A.I.</td></tr>
<tr><td rowspan="2">AI Vision</td><td colspan="2">OFF</td><td rowspan="2">• AI Vision enhances image quality by optimizing the contrast of images and background brightness.
• Activating AI Vision will affect:
<table><tr><th>Affected Function</th><th>Function Status</th></tr><tr><td>» Night Vision</td><td>Unable to select</td></tr></table></td></tr>
<tr><td colspan="2">ON</td></tr>
<tr><td rowspan="7">Refresh Rate</td><td rowspan="5">Location</td><td>Left Top</td><td rowspan="7">• Location is adjustable in OSD Menu. Press the OK Button to confirm and apply your Refresh Rate Location.
• This monitor follows and works at the Operating System's preset Screen Refresh Rate.</td></tr>
<tr><td>Right Top</td></tr>
<tr><td>Left Bottom</td></tr>
<tr><td>Right Bottom</td></tr>
<tr><td>Customize</td></tr>
<tr><td colspan="2">OFF</td></tr>
<tr><td colspan="2">ON</td></tr>
<tr><td rowspan="9">Alarm Clock</td><td rowspan="5">Location</td><td>Left Top</td><td rowspan="9">• After setting the time, press the OK Button to activate the timer.
• Users have to manually restore their preset Alarm Clock after any AC power loss and reconnection.</td></tr>
<tr><td>Right Top</td></tr>
<tr><td>Left Bottom</td></tr>
<tr><td>Right Bottom</td></tr>
<tr><td>Customize</td></tr>
<tr><td colspan="2">OFF</td></tr>
<tr><td>15:00</td><td rowspan="4">00:01 ~ 99:59</td></tr>
<tr><td>30:00</td></tr>
<tr><td>45:00</td></tr>
<tr><td>60:00</td></tr>
</table>

<table>
<tr><th>1st Level Menu</th><th>2nd/3rd Level Menu</th><th>Description</th></tr>
<tr><td rowspan="2">Adaptive-Sync</td><td>OFF</td><td rowspan="2">• Adaptive-Sync prevents screen tearing.
• Activating Adaptive-Sync will affect:
<table><tr><th>Affected Function</th><th>Function Status</th></tr><tr><td>» Screen Size 1:1</td><td>Set to Auto</td></tr><tr><td>» PIP/PBP
» Optix Scope</td><td>Set to OFF</td></tr></table></td></tr>
<tr><td>ON</td></tr>
<tr><td rowspan="2">DSC</td><td>OFF</td><td rowspan="2">• Users can toggle DSC (Display Stream Compression) on/off.
• For more DSC timing information, please check Preset Display Modes for DSC On/Off timing tables.
• Activating DSC will affect:
<table><tr><th>Affected Function</th><th>Function Status</th></tr><tr><td>» PIP/PBP
» Screen Size 16:10</td><td>Unable to select</td></tr></table></td></tr>
<tr><td>ON</td></tr>
</table>

Professional

<table>
<tr><th>1st Level Menu</th><th>2nd Level Menu</th><th>Description</th></tr>
<tr><td rowspan="7">Pro Mode</td><td>Eco</td><td rowspan="7">• Use Up or Down Button to select and preview mode effects.
• Press the OK Button to confirm and apply your mode type.
• The default setting “Eco” mode meets the requirements of TUV Rheinland’s “Low Blue Light” standard.
• Activating sRGB, Adobe RGB, and Display P3 will affect:
<table><tr><th>Affected Function</th><th>Function Status</th></tr><tr><td>» Color Temperature
» Low Blue Light
» Contrast</td><td>Unable to select</td></tr></table></td></tr>
<tr><td>User</td></tr>
<tr><td>Anti-Blue</td></tr>
<tr><td>Movie</td></tr>
<tr><td>Office</td></tr>
<tr><td>sRGB</td></tr>
<tr><td>Adobe RGB
Display P3</td></tr>
<tr><td rowspan="2">Low Blue Light</td><td>OFF</td><td rowspan="2">• Low Blue Light protects your eyes against blue light. When enabled, Low Blue Light adjusts the screen color temperature to a more yellow glow.
• When Pro Mode is set to Anti-Blue, it is mandatory to enable Low Blue Light.
• This monitor is a Low Blue Light monitor which will decrease the blue light emitted without adjusting the OSD settings.</td></tr>
<tr><td>ON</td></tr>
<tr><td rowspan="5">Image Enhancement</td><td>OFF</td><td rowspan="5">• Image Enhancement enhances image edges to improve their acutance.</td></tr>
<tr><td>Weak</td></tr>
<tr><td>Medium</td></tr>
<tr><td>Strong</td></tr>
<tr><td>Strongest</td></tr>
</table>

Image

<table>
<tr><th>1st Level Menu</th><th colspan="2">2nd/3rd Level Menu</th><th>Description</th></tr>
<tr><td>Brightness</td><td colspan="2">0-100</td><td>• Properly adjust Brightness according to the surrounding lighting.</td></tr>
<tr><td>Contrast</td><td colspan="2">0-100</td><td>• Properly adjust Contrast to relax your eyes.</td></tr>
<tr><td>Sharpness</td><td colspan="2">0-5</td><td>• Sharpness improves clarity and details of images.</td></tr>
<tr><td rowspan="6">Color Temperature</td><td colspan="2">Cool</td><td rowspan="6">• Use Up or Down Button to select and preview mode effects.
• Press the OK Button to confirm and apply your mode type.
• Users can adjust Color Temperature in Customization mode.</td></tr>
<tr><td colspan="2">Normal</td></tr>
<tr><td colspan="2">Warm</td></tr>
<tr><td rowspan="3">Customization</td><td>R (0-100)</td></tr>
<tr><td>G (0-100)</td></tr>
<tr><td>B (0-100)</td></tr>
<tr><td rowspan="7">Screen Size</td><td colspan="2">Auto</td><td rowspan="7">• Users can adjust Screen Size in any mode, any resolution and any screen refresh rate.
• Activating Screen Size 1:1 will affect:
<table><tr><th>Affected Function</th><th>Function Status</th></tr><tr><td>» Adaptive-Sync
» Optix Scope
» PIP/PBP</td><td>Set to OFF</td></tr></table></td></tr>
<tr><td colspan="2">4:3</td></tr>
<tr><td colspan="2">16:9</td></tr>
<tr><td colspan="2">16:10</td></tr>
<tr><td colspan="2">1:1</td></tr>
<tr><td colspan="2">24.5”</td></tr>
<tr><td colspan="2">27”</td></tr>
<tr><td rowspan="2">DisplayHDR</td><td colspan="2">True Black 400</td><td rowspan="2">• Users can set the DisplayHDR to True Black 400 or Peak 1000 nits.</td></tr>
<tr><td colspan="2">Peak 1000 nits</td></tr>
</table>

Input Source

<table>
<tr><th>1st Level Menu</th><th>2nd Level Menu</th><th>Description</th></tr>
<tr><td colspan="2">HDMI™ 1</td><td rowspan="4">• Users can adjust Input Source in any mode.</td></tr>
<tr><td colspan="2">HDMI™ 2</td></tr>
<tr><td colspan="2">DP</td></tr>
<tr><td colspan="2">Type C</td></tr>
<tr><td rowspan="2">Auto Scan</td><td>OFF</td><td rowspan="2">• Users can use the Navi Key to select Input Source at below status:
• While “Auto Scan” is set to “OFF” with the monitor at power saving mode;
• While “No Signal” message box is shown on the monitor.</td></tr>
<tr><td>ON</td></tr>
</table>

PIP/PBP

1st Level Menu	2nd/3rd Level Menu		Description
OFF			• PIP (Picture in Picture) allows users to simultaneously display multiple video sources on one screen. One program is displayed on the full screen at the same time as one or more other programs are displayed in inset windows. • PBP (Picture by Picture) is a similar feature that displays two input sources side-by-side on the screen. • Display Switch allows users to switch between primary and secondary input sources. • If there is only one signal input, the Display Switch and Audio Switch will be grayed out. • Users can adjust the ratio of window division by switching mode 1/ 2. • Activating PIP/PBP will affect:
PIP	Source	HDMI™ 1	
		HDMI™ 2	
		DP	
		Type C	
	PIP Size	Small	
		Medium	
		Large	
	Location	Left Top	
		Right Top	
		Left Bottom	
		Right Bottom	
		Customize	
	Display Switch		
	Audio Switch		
PBP	Mode 1		
	Mode 2		
	Customize		
	Source 1	HDMI™ 1	
		HDMI™ 2	
		DP	
		Type C	
	Source 2	HDMI™ 1	
		HDMI™ 2	
		DP	
		Type C	
	Display Switch		
	Audio Switch		

Affected Function	Function Status
» Adaptive-Sync » Optix Scope	Set to OFF
» HDMI™ CEC	Set to OFF & unable to select
» DisplayHDR » DSC	Unable to select

• Activating PIP will affect:

Affected Function	Function Status
» Screen Size 24.5"/ 27"	Set to Auto
» Screen Size 1:1/ 16:10	Set to Auto & unable to select

• Activating PBP will affect:

Affected Function	Function Status
» Screen Size 1:1/ 16:10/ 24.5"/ 27"	Set to Auto & unable to select

Navi Key

1st Level Menu	2nd Level Menu	Description
Up Down Left Right G Key	OFF	• All Navi Key items can be adjusted via OSD Menus.
	Brightness	
	Game Mode	
	Smart Crosshair	
	Alarm Clock	
	Input Source	
	PIP/PBP Mode	
	Refresh Rate	
	Info. On Screen	
	Night Vision	
	Optix Scope	

Settings

1st Level Menu	2nd Level Menu	Description
Language	繁體中文	• Users have to press the OK Button to confirm and apply the Language setting. • Language is an independent setting. Users' own language setting will override the factory default. When users set Reset to Yes, Language will not be changed.
	English	
	Français	
	Deutsch	
	Italiano	
	Español	
	한국어	
	日本語	
	Русский	
	Português	
	简体中文	
	Bahasa Indonesia	
	Türkçe	
	(More languages coming soon)	
Transparency	0~5	• Users can adjust Transparency in any mode.
OSD Time Out	5~30s	• Users can adjust OSD Time Out in any mode.
Power Button	OFF	• When set to OFF, users can press the power button to turn off the monitor.
	Standby	• When set to Standby, users can press the power button to turn off the panel and backlight.

1st Level Menu	2nd Level Menu	Description
Info. On Screen	OFF ON	• The information of the monitor status will be shown on the right side of the screen.

HDMI™ CEC	OFF
	ON
		• HDMI™ CEC (Consumer Electronics Control) supports Sony PlayStation®, Nintendo® Switch™, Xbox Series X|S consoles and various audio-visual devices that are CEC-capable.
		• If HDMI™ CEC is set to ON:
		  • The monitor will automatically power on when the CEC device is turned on.
		  • The CEC device will enter power saving mode when the monitor is turned off.
		  • When Sony PlayStation®, Nintendo® Switch™, or Xbox Series X|S console is connected, Game Mode and Pro Mode will be automatically set to default modes and can be adjusted to users' preferred modes later.

Type C PD Charge	OFF ON	• This function enables users to charge their devices through a USB Type-C connector. • Type C PD Charge enables users to charge their devices through a USB Type-C connector, which can deliver up to 15W (5V/3A).
Power LED	OFF ON	• Users can toggle the Power LED on/off. • During the Panel Protect process, the power LED indicator will blink orange until the process is complete.
Reset	YES NO	• Users can Reset and restore settings to original OSD Default in any mode.

MSI OLED Care

1st Level Menu	2nd/3rd Level Menu		Description
Pixel Shift	Slow		• Pixel Shift moves the pixels of your screen at regular intervals to reduce the possibility of screen burn-in or image retention.
	Normal		
	Fast		
Panel Protect			• To maintain panel image quality, panel protect function will automatically activate when monitor using over 4 hours. • This protect function may take several minutes to complete. • The power indicator will blink orange color until process done. • During process executing, please do not unplug the power cord from monitor. • During process executing, press power button again to cancel this function.
Protect Notice	Auto		• When set to Auto, Protect Notice will pop up when the panel exceeds 4 hours of cumulative usage. • When set to Usage 16 hrs, Protect Notice will pop up when the panel exceeds 16 hours of cumulative usage. • When Panel Protect is interrupted, Protect Notice will pop up upon next power-up.
	Usage 16 hrs		

Static Screen Detection	OFF		• If Static Screen Detection is set to ON:
			  • When detecting static visuals over long periods of time, the monitor reduces brightness to prevent screen burn-in.
			  • Once detecting moving visuals, the monitor restores its previous brightness setting.

	ON		
	Starting in	50 Sec	• Starting in detects the time a static image remains on the screen.
		100 Sec	
	Time required	120 Sec	• Time required specifies the time for brightness reduction after detecting a static image for 50/100 seconds. • The brightness reduction level depends on the setting of Reducing Level.
		240 Sec	
	Reducing Level	1-7	• Users can select a level for brightness reduction. • Reducing effect depends on Brightness/ DisplayHDR setting.

1st Level Menu	2nd/3rd Level Menu		Description
Multi Logo Detection	OFF		• This function helps prevent image sticking phenomenon. When set to ON, brightness reduction of multi logo areas will kick in if logos are detected.
	ON		
	Reducing Level	1-2	• Users can select a level for brightness reduction. • Reducing effect depends on Brightness/ DisplayHDR setting.
Taskbar Detection	OFF		• This function helps prevent image sticking phenomenon. When set to ON, brightness reduction of taskbar areas will kick in if taskbars are detected.
	ON		
	Reducing Level	1-3	• Users can select a level for brightness reduction. • Reducing effect depends on Brightness/ DisplayHDR setting.
Boundary Detection	OFF		• This function helps prevent image sticking phenomenon. When set to ON, brightness reduction of boundary areas will kick in if boundaries, such as letters, pillars and vertical lines, are detected.
	ON		
	Reducing Level	1-3	• Users can select a level for brightness reduction. • Reducing effect depends on Brightness/ DisplayHDR setting.
OLED Panel Info.			• This field shows the information of MSI OLED Care.

Specifications

Monitor	MAG 321UP QD-OLED
Size	31.5 inch
Curvature	Flat
Panel Type	QD-OLED
Resolution	3840x2160 (UHD)
Aspect Ratio	16:9
Brightness	• Typical SDR: 250 nits • Peak HDR: 1000 nits
Contrast Ratio	1500000:1
Refresh Rate	165Hz
Response Time	0.03ms (GTG)
I/O	• 2 x HDMI™ Connector • 1 x DisplayPort • 1 x USB Type-C Port • 1 x Headphone Jack
View Angles	178°(H) , 178°(V)
DCI-P3*/ sRGB	99%/ 138.2%
Surface Treatment	Anti-Reflection
Display Colors	1.07B (10 bits)
Monitor Power Options	100~240Vac, 50/60Hz, 2.7A
Power Consumption (Typical)	Power On < 210W Standby < 0.5W Power Off < 0.3W
Adjustment (Height)	0 ~ 110mm
Adjustment (Tilt)	-5° ~ 15°
Adjustment (Swivel)	-30° ~ 30°
Adjustment (Pivot)	-10° ~ 10°
Kensington Lock	Yes

VESA Mounting	• Plate Type: 100 x 100 mm
	• Screw Type: M4 x 10 mm
	  • Thread Diameter: 4 mm
	  • Thread Pitch: 0.7 mm
	  • Thread Length: 10 mm

Monitor		MAG 321UP QD-OLED
Dimension (W x H x D)		717 x 457 x 242 mm
Weight	Net	9.1 kg
	Gross	11.8 kg
Environment	Operating	• Temperature: 0°C to 40°C • Humidity: 20% to 90%, non-condensing • Altitude: 0 ~ 5000m
	Storage	• Temperature: -20°C to 60°C • Humidity: 10% to 90%, non-condensing

* Based on CIE1976 test standards.

Preset Display Modes

Important

- *All information is subject to change without prior notice.*
- *HDMI™ VRR (Variable Refresh Rate) synchronizes with Adaptive-Sync (ON/ OFF). For VRR ON/OFF status, please check Adaptive-Sync.*

Standard Default Mode (DSC On)

Standard	Resolution		HDMI™	DP	USB-C
QHD	2560x1440	@60Hz	V	V	V
		@120Hz	V	V	V
UHD	3840x2160	@60Hz	V	V	V
		@120Hz		V	V
		@165Hz	V	V	V
Video Timing Resolution	720P		V	V	V
	1080P	@60Hz	V	V	V
		@120Hz	V	V	V
	2160P	@30Hz	V		
		@60Hz	V		
		@120Hz	V		
HDMI™ VRR			V		

Standard Mode (DSC Off)

Standard	Resolution		HDMI™	DP	USB-C
Full HD	1920x1080	@60Hz	V	V	V
QHD	2560x1440	@60Hz	V	V	V
		@120Hz	V	V	V
UHD	3840x2160	@60Hz	V	V	V
		@120Hz		V	V
Video Timing Resolution	720P		V	V	V
	1080P	@60Hz	V	V	V
		@120Hz	V	V	V
	2160P	@30Hz	V		
		@60Hz	V		
		@120Hz	V		
HDMI™ VRR			V		

PIP Mode (Not Support HDR)

Standard	Resolution		HDMI™	DP	USB-C
QHD	2560x1440	@60Hz	V	V	V
		@120Hz	V	V	V
UHD	3840x2160	@60Hz	V	V	V
		@120Hz	V	V	V
Video Timing Resolution	720P		V	V	V
	1080P	@60Hz	V	V	V
		@120Hz	V	V	V
	2160P	@30Hz	V	V	
		@50Hz	V	V	
		@60Hz	V	V	
		@120Hz	V	V	V

PBP Mode 1 (Not Support HDR)

Standard	Resolution		HDMI™	DP	USB-C
Video Timing Resolution	720P		V	V	V
Used for PBP Full Screen	2880x2160	@60Hz	V	V	V
	960x2160	@60Hz	V	V	V

PBP Mode 2/Customize (Not Support HDR)

Standard	Resolution		HDMI™	DP	USB-C
Video Timing Resolution	720P		V	V	V
Used for PBP Full Screen	1920x2160	@60Hz	V	V	V

Screen Size 16:10 (Not Support HDR)

Standard	Resolution		HDMI™	DP	USB-C
QHD+	2560x1600	@60Hz	V	V	V
		@120Hz	V	V	V

Troubleshooting

The power LED is off.

- Press the monitor power button again.
- Check if the monitor power cable is properly connected.

No image.

- Check if the computer graphics card is properly installed.
- Check if the computer and monitor are connected to electrical outlets and are turned on.
- Check if the monitor signal cable is properly connected.
- The computer may be in Standby mode. Press any key to activate the monitor.

The screen image is not properly sized or centered.

- Refer to Preset Display Modes to set the computer to a setting suitable for the monitor to display.

No Plug & Play.

- Check if the monitor power cable is properly connected.
- Check if the monitor signal cable is properly connected.
- Check if the computer and graphics card are Plug & Play compatible.

The icons, font or screen are fuzzy, blurry or have color problems.

- Avoid using any video extension cables.
- Adjust brightness and contrast.
- Adjust RGB color or tune color temperature.
- Check if the monitor signal cable is properly connected.
- Check for bent pins on the signal cable connector.

The monitor starts flickering or shows waves.

- Change the refresh rate to match the capabilities of your monitor.
- Update your graphics card drivers.
- Keep the monitor away from electrical devices that may cause electromagnetic interference (EMI).

Safety Instructions

- Read the safety instructions carefully and thoroughly.
- All cautions and warnings on the device or User Guide should be noted.
- Refer servicing to qualified personnel only.

Power

- Make sure that the power voltage is within its safety range and has been adjusted properly to the value of 100~240V before connecting the device to the power outlet.
- If the power cord comes with a 3-pin plug, do not disable the protective earth pin from the plug. The device must be connected to an earthed mains socket-outlet.
- Please confirm the power distribution system in the installation site shall provide the circuit breaker rated 120/240V, 20A (maximum).
- Always disconnect the power cord or switch the wall socket off if the device would be left unused for a certain time to achieve zero energy consumption.
- Place the power cord in a way that people are unlikely to step on it. Do not place anything on the power cord.
- If this device comes with an adapter, use only the MSI provided AC adapter approved for use with this device.

Environment

- To reduce the possibility of heat-related injuries or of overheating the device, do not place the device on a soft, unsteady surface or obstruct its air ventilators.
- Use this device only on a hard, flat and steady surface.
- To prevent the device from tipping over, secure the device to a desk, wall or fixed object with an anti-tip fastener that helps to properly support the device and keep it safe in place.
- To prevent fire or shock hazard, keep this device away from humidity and high temperature.
- Do not leave the device in an unconditioned environment with a storage temperature above 60°C or below -20°C, which may damage the device.
- The maximum operating temperature is around 40°C.
- When cleaning the device, be sure to remove the power plug. Use a piece of soft cloth rather than industrial chemical to clean the device. Never pour any liquid into the opening; that could damage the device or cause electric shock.
- Always keep strong magnetic or electrical objects away from the device.

- If any of the following situations arises, get the device checked by service personnel:
  - The power cord or plug is damaged.
  - Liquid has penetrated into the device.
  - The device has been exposed to moisture.
  - The device does not work well or you can not get it working according to the User Guide.
  - The device has dropped and damaged.
  - The device has obvious sign of breakage.

TÜV Rheinland Certification

TÜV Rheinland Low Blue Light Certification

Blue light has been shown to cause eye fatigue and discomfort. MSI now offers monitors with TÜV Rheinland Low Blue Light certification to ensure users' eye comfort and well-being. Please follow the instructions below to reduce the symptoms from extended exposure to the screen and blue light.

- Place the screen 20 – 28 inches (50 – 70 cm) away from your eyes and a little below eye level.
- Consciously blinking the eyes every now and then will help to reduce eye strain after extended screen time.
- Take breaks for 20 minutes every 2 hours.
- Look away from the screen and gaze at a distant object for at least 20 seconds during breaks.
- Make stretches to relieve body fatigue or pain during breaks.

TÜV Rheinland Flicker Free Certification

- TÜV Rheinland has tested this product to ascertain whether the display produces visible and invisible flicker for the human eye and therefore strains the eyes of users.
- TÜV Rheinland has defined a catalogue of tests, which sets out minimum standards at various frequency ranges. The test catalogue is based on internationally applicable standards or standards common within the industry and exceeds these requirements.
- The product has been tested in the laboratory according to these criteria.
- The keyword "Flicker Free" confirms that the device has no visible and invisible flicker defined in this standard within the range of 0 - 3000 Hz under various brightness settings.
- The display will not support Flicker Free when Anti Motion Blur/MPRT is enabled. (The availability of Anti Motion Blur/MPRT varies by products.)

Regulatory Notices

CE Conformity

This device complies with the requirements set out in the Council Directive on the Approximation of the Laws of the Member States relating to Electromagnetic Compatibility (2014/30/EU), Low-voltage Directive (2014/35/EU), ErP Directive (2009/125/EC) and RoHS directive (2011/65/EU). This product has been tested and found to comply with the harmonized standards for Information Technology Equipment published under Directives of Official Journal of the European Union.

FCC-B Radio Frequency Interference Statement

This equipment has been tested and found to comply with the limits for a Class B digital device, pursuant to Part 15 of the FCC Rules. These limits are designed to provide reasonable protection against harmful interference in a residential installation. This equipment generates, uses and can radiate radio frequency energy and, if not installed and used in accordance with the instruction manual, may cause harmful interference to radio communications. However, there is no guarantee that interference will not occur in a particular installation. If this equipment does cause harmful interference to radio or television reception, which can be determined by turning the equipment off and on, the user is encouraged to try to correct the interference by one or more of the measures listed below:

- Reorient or relocate the receiving antenna.
- Increase the separation between the equipment and receiver.
- Connect the equipment into an outlet on a circuit different from that to which the receiver is connected.
- Consult the dealer or an experienced radio/television technician for help.

Notice 1

The changes or modifications not expressly approved by the party responsible for compliance could void the user's authority to operate the equipment.

Notice 2

Shielded interface cables and AC power cord, if any, must be used in order to comply with the emission limits.

This device complies with Part 15 of the FCC Rules. Operation is subject to the following two conditions:

1. This device may not cause harmful interference, and
2. This device must accept any interference received, including interference that may cause undesired operation.

MSI Computer Corp.

901 Canada Court, City of Industry, CA 91748, USA

(626) 913-0828

www.msi.com

WEEE Statement

Under the European Union ("EU") Directive on Waste Electrical and Electronic Equipment, Directive 2012/19/EU, products of "electrical and electronic equipment" cannot be discarded as municipal waste anymore and manufacturers of covered electronic equipment will be obligated to take back such products at the end of their useful life.

Chemical Substances Information

In compliance with chemical substances regulations, such as the EU REACH Regulation (Regulation EC No. 1907/2006 of the European Parliament and the Council), MSI provides the information of chemical substances in products at: https://csr.msi.com/global/index

RoHS Statement

Japan JIS C 0950 Material Declaration

A Japanese regulatory requirement, defined by specification JIS C 0950, mandates that manufacturers provide material declarations for certain categories of electronic products offered for sale after July 1, 2006.
https://csr.msi.com/global/Japan-JIS-C-0950-Material-Declarations

India RoHS

This product complies with the "India E-waste (Management and Handling) Rule 2016" and prohibits use of lead, mercury, hexavalent chromium, polybrominated biphenyls or polybrominated diphenyl ethers in concentrations exceeding 0.1 weight % and 0.01 weight % for cadmium, except for the exemptions set in Schedule 2 of the Rule.

Turkey EEE Regulation

Conforms to the EEE Regulations of the Republic Of Turkey

Ukraine Restriction of Hazardous Substances

The equipment complies with requirements of the Technical Regulation, approved by the Resolution of Cabinet of Ministry of Ukraine as of 10 March 2017, № 139, in terms of restrictions for the use of certain dangerous substances in electrical and electronic equipment.

Vietnam RoHS

As from December 1, 2012, all products manufactured by MSI comply with Circular 30/2011/TT-BCT temporarily regulating the permitted limits for a number of hazardous substances in electronic and electric products.

Green Product Features

- Reduced energy consumption during use and stand-by
- Limited use of substances harmful to the environment and health
- Easily dismantled and recycled
- Reduced use of natural resources by encouraging recycling
- Extended product lifetime through easy upgrades
- Reduced solid waste production through take-back policy

Environmental Policy

- The product has been designed to enable proper reuse of parts and recycling and should not be thrown away at its end of life.
- Users should contact the local authorized point of collection for recycling and disposing of their end-of-life products.
- Visit the MSI website and locate a nearby distributor for further recycling information.
- Users may also reach us at gpcontdev@msi.com for information regarding proper disposal, take-back, recycling, and disassembly of MSI products.

Warning!

Overuse of screens is likely to affect eyesight.

Recommendations:

1. Take a 10-minute break for every 30 minutes of screen time.
2. Children under 2 years of age should have no screen time. For children aged 2 years and over, screen time should be limited to less than one hour per day.

Copyright and Trademarks Notice

Copyright © Micro-Star Int'l Co., Ltd. All rights reserved. The MSI logo used is a registered trademark of Micro-Star Int'l Co., Ltd. All other marks and names mentioned may be trademarks of their respective owners. No warranty as to accuracy or completeness is expressed or implied. MSI reserves the right to make changes to this document without prior notice.

The terms HDMI™, HDMI™ High-Definition Multimedia Interface, HDMI™ Trade dress and the HDMI™ Logos are trademarks or registered trademarks of HDMI™ Licensing Administrator, Inc.

Technical Support

If a problem arises with your product and no solution can be obtained from the user's manual, please contact your place of purchase or local distributor. Alternatively, please visit https://www.msi.com/support/ for further guidance.