tapo

IQ+ Smart Cleaning™

5300Pa
Ultra-Powerful
Robot Vacuum and Mop

Tapo RV30 Max

DeepVac™ for Better Dust Removal

LiDAR + IMU
Dual Navigation System

Mesh Grid™
No Spots Missed

Prevent Getting Stuck
under Sofas

52 dB
Quiet Clean†

works with alexa

works with Google Home

tp-link

Highlights

Tapo IQ+ Smart Cleaning™

Tailor Your Cleaning Routine

Abundant Cleaning Options

Set the water volume, suction power, and number of cleanings for every room.

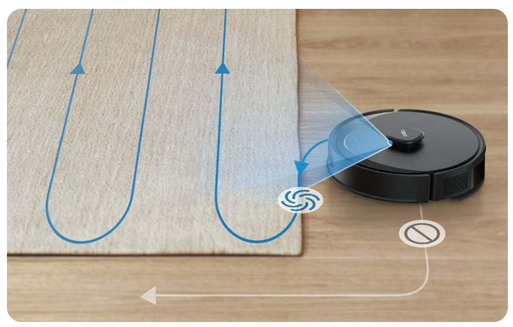

Customizable Carpet Preferences

Optimize your mopping and navigation preferences to either avoid carpets or clean across them efficiently.

Precise Scheduling

Set daily cleaning schedules to fit your preferred routine.

Highlights

Dust-Free, Stress-Free

Better Dust Removal Efficiency‡

DeepVac™ tech allows smoother dust flow to enhance dust removal efficiency on various floors.

No Spots Missed

Employs Mesh Grid™ to conduct more comprehensive and deeper clean, effectively avoiding missed spots.

Highlights

- **LiDAR + IMU Dual Navigation System**

  Accurately maps out your house in minutes, avoids omissions and repeated cleaning, and even works well in the dark.

- **5300Pa Powerful Suction**

  Sweeps away debris sandwiched between gaps and dust hidden in carpets for a deeper, powerful clean.

- **Up to 4 Multi-Floor Cleaning**

  Accurately recognizes different floors faster with local-stored maps without the need for manual switch.

- **52 dB Quiet Clean†**

  Lower noise level to 52 dB - quieter than a running microwave, ensuring a hushed cleaning experience.

- **Up to 150 min Continuous Cleaning†**

  The high-performance battery provides up to 150 minutes of continuous cleaning to clean your house in one run.

- **Up to 22 mm / 0.87 in Super Hurdle Capacity**

  Effortlessly climbs over thresholds and obstacles under 22 mm / 0.87 in to provide a more thorough cleaning experience.

- **Obstacle Detection and Anti-Collision**

  Accurately detects common objects to roam around obstacles, under furniture, and along wall edges, all while avoiding falls down stairs and ledges.

- **Voice & Remote Control**

  Simply send voice commands via smart speakers or control via the Tapo app.

Specifications

Care and Maintenance

To maintain optimal performance, maintain the robot vacuum according to the following guidelines.

Part	Maintenance Frequency	Replacement Frequency*
Dustbin	Clean/wash as needed	/
Filter	Once a week	3-6 months
Main Brush	Every 2 weeks	6-12 months
Main Brush Cover	Every 2 weeks	6-12 months
Side Brush	Once a month	3-6 months
Mop Cloth	After each use	2-3 months
Caster Wheel	Clean as needed	/
Main Wheels	Once a month	/
Sensors	Once a month	/
Charging Contacts	Once a month	/

*Replacement frequency may vary depending on the actual situation. Parts should be replaced if visible wear appears.

Specifications

Mapping & Navigation Features

- Mapping/Path Planning: LiDAR + Gyroscope
- High-Precision Map: Yes
- Obstacle Avoidance: LiDAR
- Barrier-Cross Height: 22 mm/0.87 in
- Anti-Drop Protection : Yes

Vacuuming Features

- Max Suction Power: 5300 Pa
- Suction Level Adjustment: 5 levels
- Dustbin Capacity: 300 ml
- Dustbin Detection: Yes
- HEPA Filter: H11
- Carpet Boost: Yes
- Noise: 52dB (Quiet mode), 55 dB (Default/Standard)

Mopping Features

- Wet Mopping : Yes
- Mopping Type: Electric Water Flow Control
- Water Level Adjustment: 3 levels
- Water Tank Capacity: 300 ml

Battery

- Battery Capacity : 2600 mAh
- Vacuum Max Battery Life: 150 min per charge (Quiet Mode)
- Recharge & Resume: Yes

App Features

- Real-Time Tracking: Yes
- Multi-Floor Mapping: Yes
- Scheduled Cleaning: Yes
- Virtual Walls: Yes
- No-Go Zones: Yes
- Zone Cleaning: Yes

Specifications

Physical

- Product Dimensions:

  Robot Vacuum: Φ330 × 100 mm (Φ13 × 3.9 in)

- Package Contents:

  Robot Vacuum Cleaner ×1 (Includes HEPA Filter x1and Side Brush x1)

  Charging Dock ×1

  Mopping Attchament ×1

  Power Cord ×1

  Cleaning Brush ×1

  User Manual

Robot Vacuum

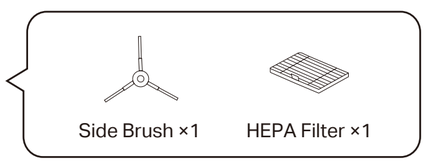

*One side brush and one HEPA Filter installed on the robot vacuum

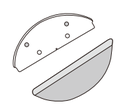

Mopping Attachment ×1

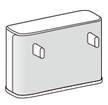

Charging Dock

Power Cord ×1

Cleaning Brush ×1

User Manual ×1

Others

- Wireless Connection:

  IEEE 802.11 b/g/n, 2.4 GHz band only;

  Bluetooth 4.2 (only for onboarding)

- Rated Input Voltage: 100-240 VAC, 50/60 Hz
- Max Charging Power Consumption: 10 W (DC20 V 500 mA) / 9.5W (DC19 V 500 mA)
- Max Working Power Consumption:

  Robot Vacuum: 45 W

- Works with Google Home: Yes
- Works with Amazon Alexa: Yes

Overview

Robot Vacuum

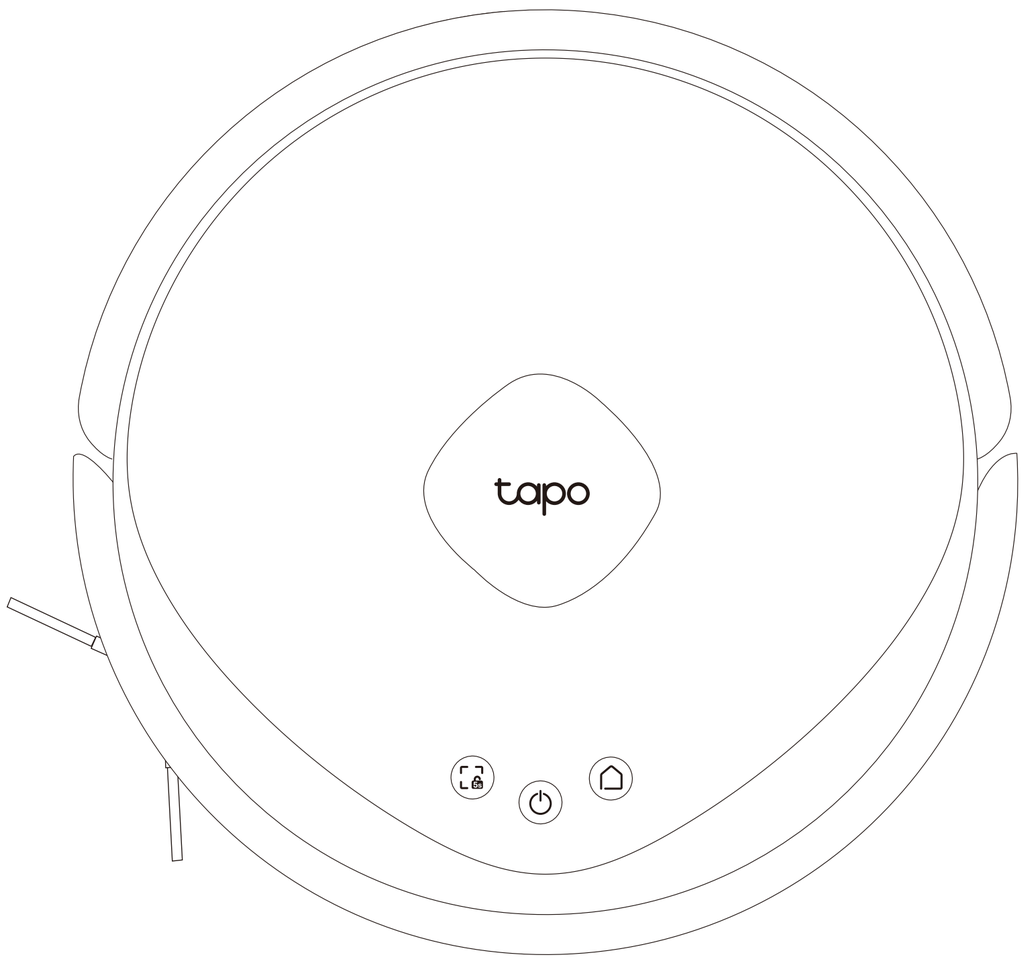

Power/Clean

- Press and hold for 3 seconds: Turn on/off the robot vacuum.
- Press once: Start/pause cleaning.

Dock

- Return to the dock to charge.
- Empty the dustbin when docked.

Spot Cleaning/Child Lock

- Press once: Start spot cleaning.
- Press and hold for 5 seconds: Turn on/off the child lock.

+ Combo Button

- Press and hold simultaneously for 5 seconds: Enter setup mode to configure the network.
- Press and hold simultaneously for 10 seconds: Restore to factory default settings.

LED

- **Red:** Battery level < 20%; Error
- **Orange:** Battery level between 20% and 80%
- **Green:** Battery level > 80%

Overview

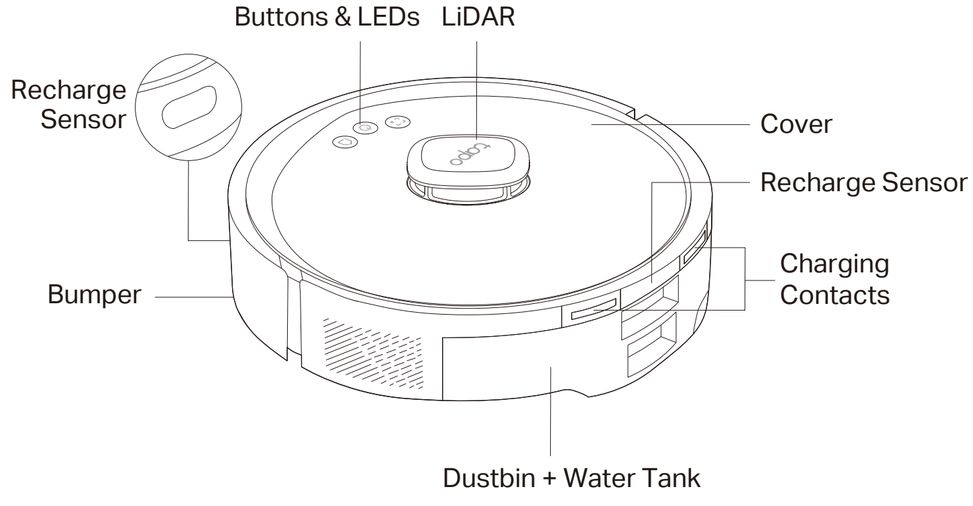

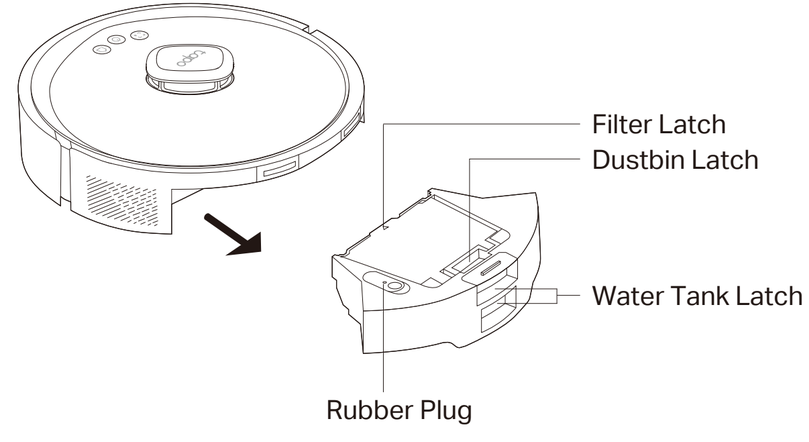

Do NOT add any cleaning agents.
Wipe the water tank dry after adding water.

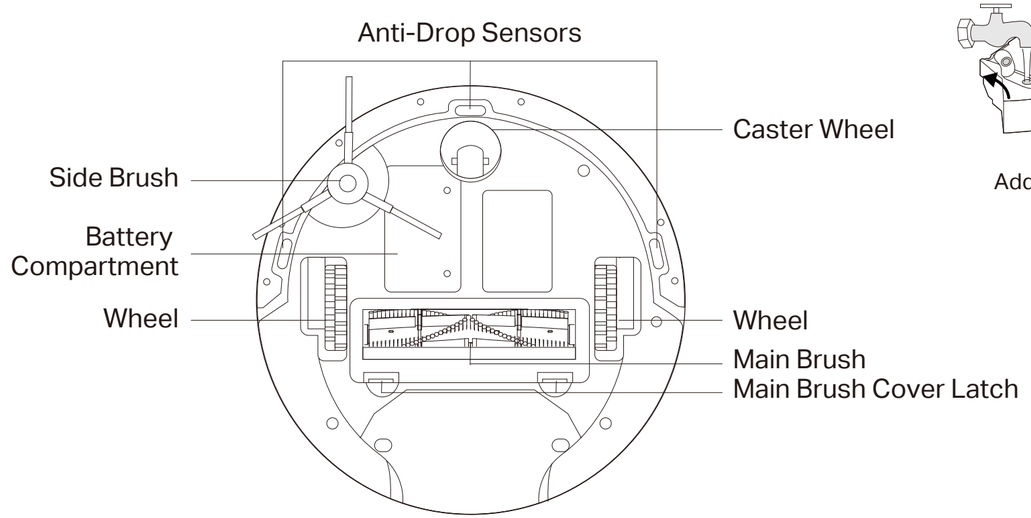

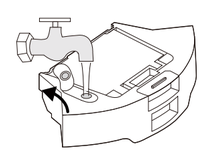

Add Water

Open Dustbin

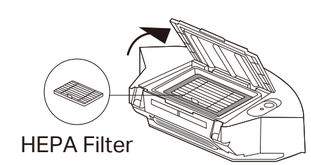

Open Lid

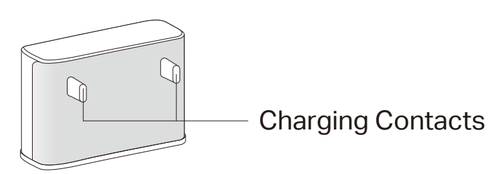

Charging Dock

For support and warranty, please visit: https://www.tapo.com/support
†Based on internal testing by Tapo Lab. Actual results are subject to change due to the usage and environmental factors.
‡Testing is conducted by Tapo Lab using Tapo RV30 Max Plus compared to Tapo RV30 Plus on rough wood floors. Actual results may vary according to the home environment.
Specifications are subject to change without notice. All brands and product names are trademarks or registered trademarks of their respective holders.
@2024 TP-Link