support.eu@equip-info.net
support.asia@equip-info.net

Quick Installation Guide

651050 Ergonomic Premium Office Chair, Grey

651051 Ergonomic Premium Office Chair, Black

651052 Ergonomic Premium Office Chair, Blue Black

Equip® is a registered trademark of Digital Data Communications GmbH
© Copyright Digital Data Communications GmbH. All Rights Reserved.

www.equip-info.net

22
PAP

Product Key Features

Premium 4D Adjustable Headrest: Fully adjustable 4D headrest, providing customized comfort and superior neck support for extended periods.

High-Quality Nylon Mesh Upholstery: Breathable and durable nylon mesh material ensures long-lasting comfort and a luxurious feel.

Advanced 5-Position Adjustable Backrest: Built with a sturdy aluminum and plastic frame, offering a 5-position lift adjustment for optimal ergonomic support.

Sophisticated Synchronous Mechanism: Features a state-of-the-art synchronous mechanism with wire control, allowing for 4-position lock and seat sliding,promoting dynamic sitting postures.

Enhanced Mobility and Stability: Equipped with 60 mm PU wheels with pressure lock and an additional set of 75 mm rubberized wheels, providing smooth, secure movement and enhanced stability on various floor surfaces.

Install Instruction

1

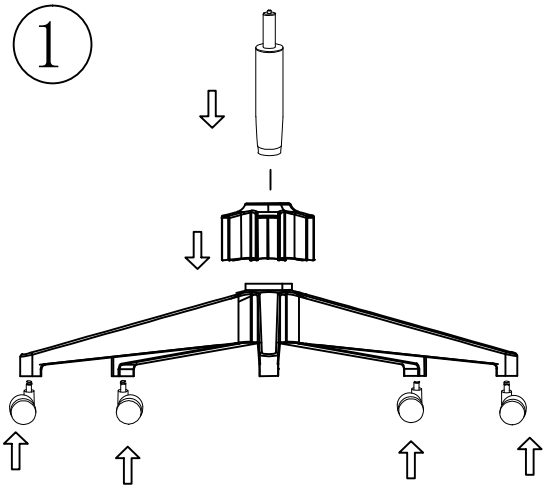

2

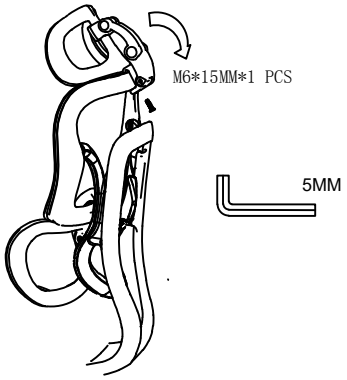

3

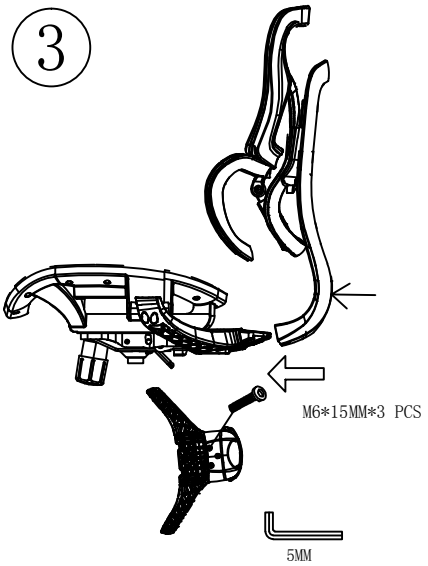

4

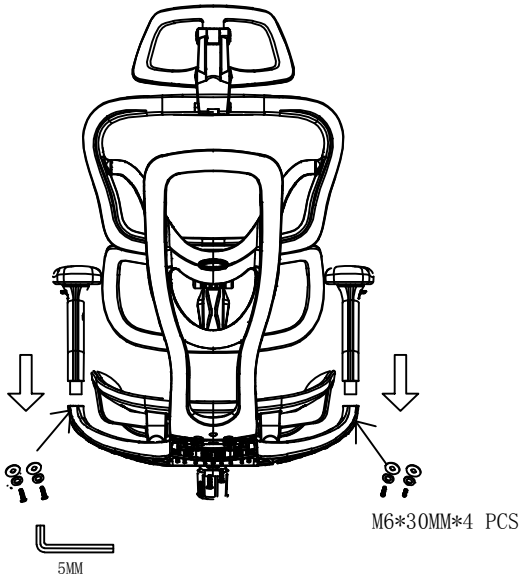

5

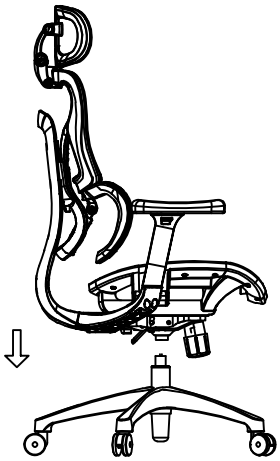

PART LIST

Wheel		*5
Gas Lift		*1
Base		*1
Seat		*1
Back-rest		*1
Head-rest		*1

Arm-rest		*2
Wrench	5MM	*1
Screw	M6*30MM	*4
Screw	M6*15MM	*3
Screw	M6*15MM	*1

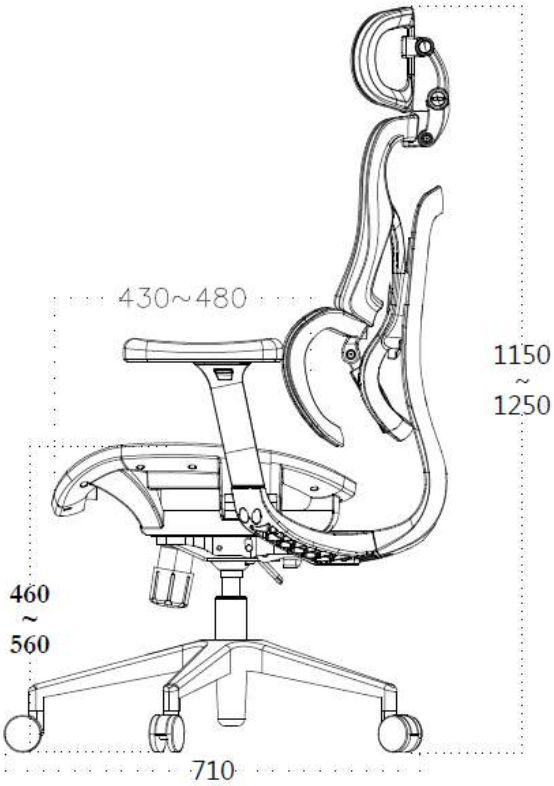

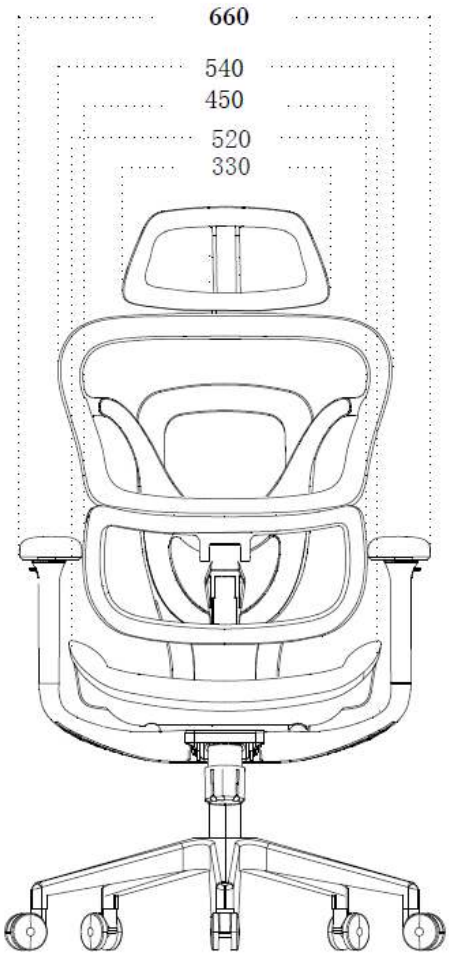

PART LIST

Wheel		*5
Gas Lift	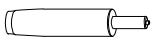	*1
Base		*1
Seat		*1
Back-rest		*1
Head-rest		*1

Arm-rest	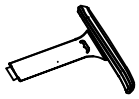	*2
Wrench	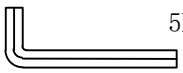 5MM	*1
Screw	M6*30MM	*4
Screw	M6*15MM	*3
Screw	M6*15MM	*1
Wheel	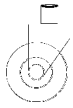 An alternative set of wheels is available	*5

Install Instruction

①

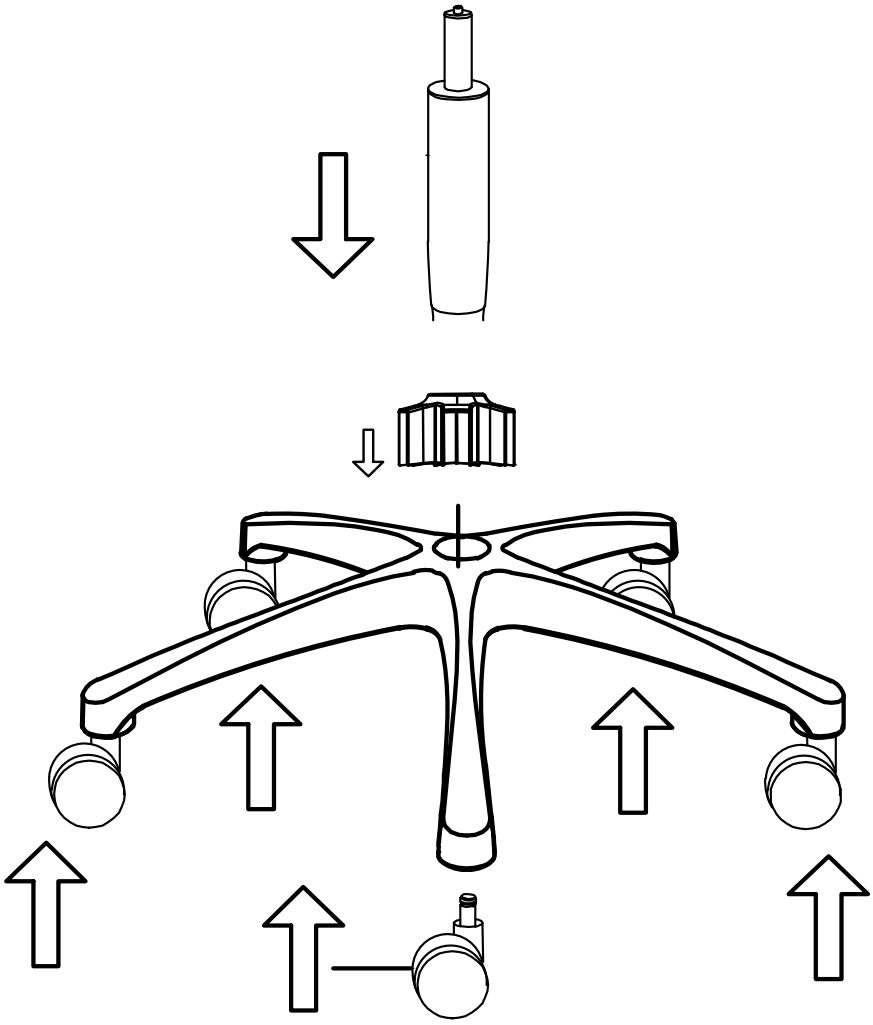

PART LIST

Wheel		*5
Gas Lift		*1
Base	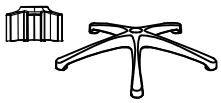	*1

Install Instruction

②

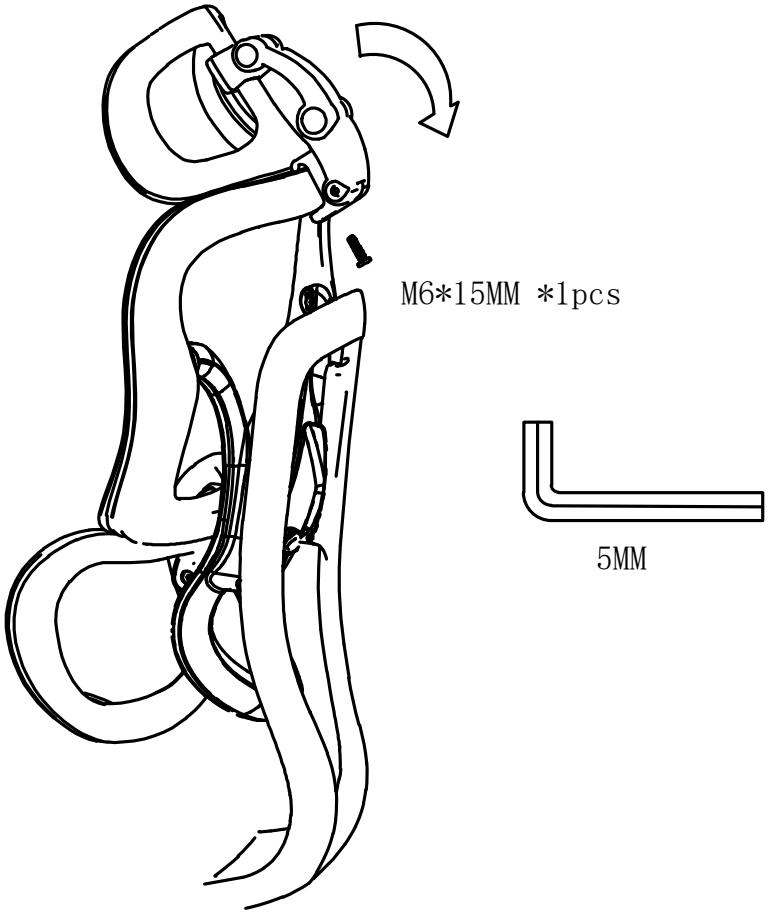

PART LIST

Back-rest		*1
Head-rest		*1
Screw	M6*15MM	*1
Wrench	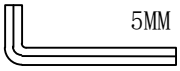 5MM	*1

Install Instruction

③

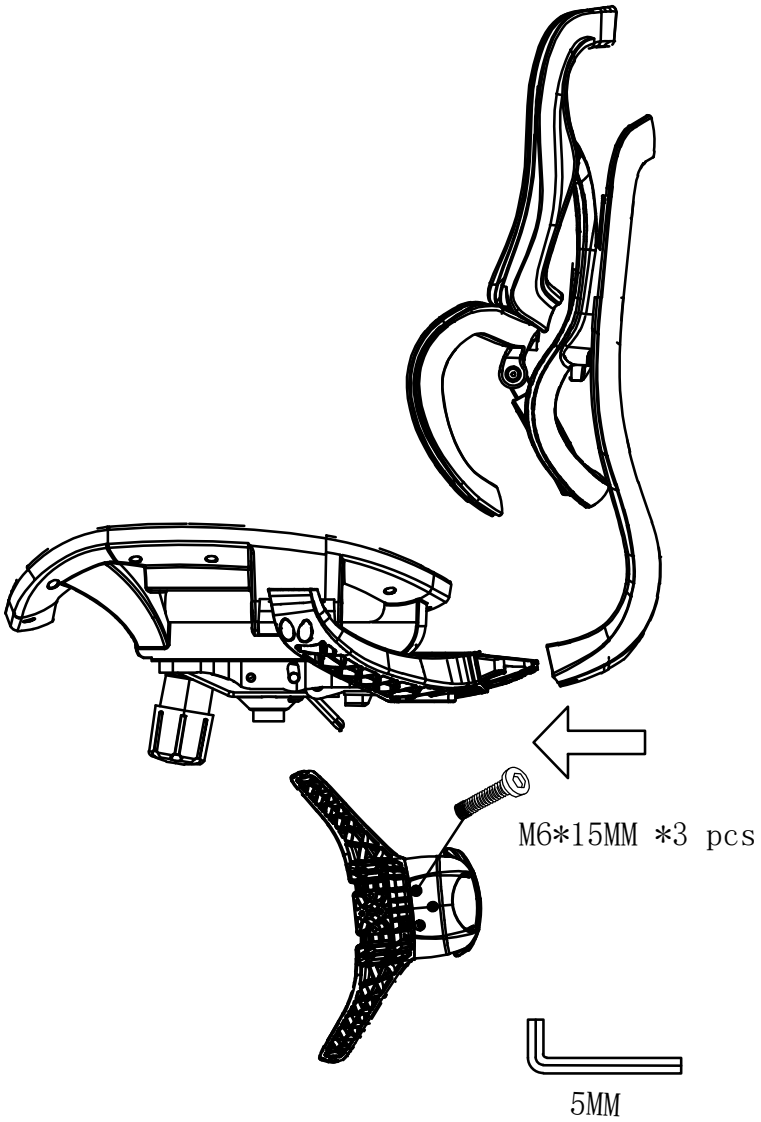

PART LIST

Seat		*1
Back-rest		*1
Screw	M6*15MM	*3
Wrench	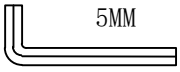 5MM	*1

Install Instruction

④

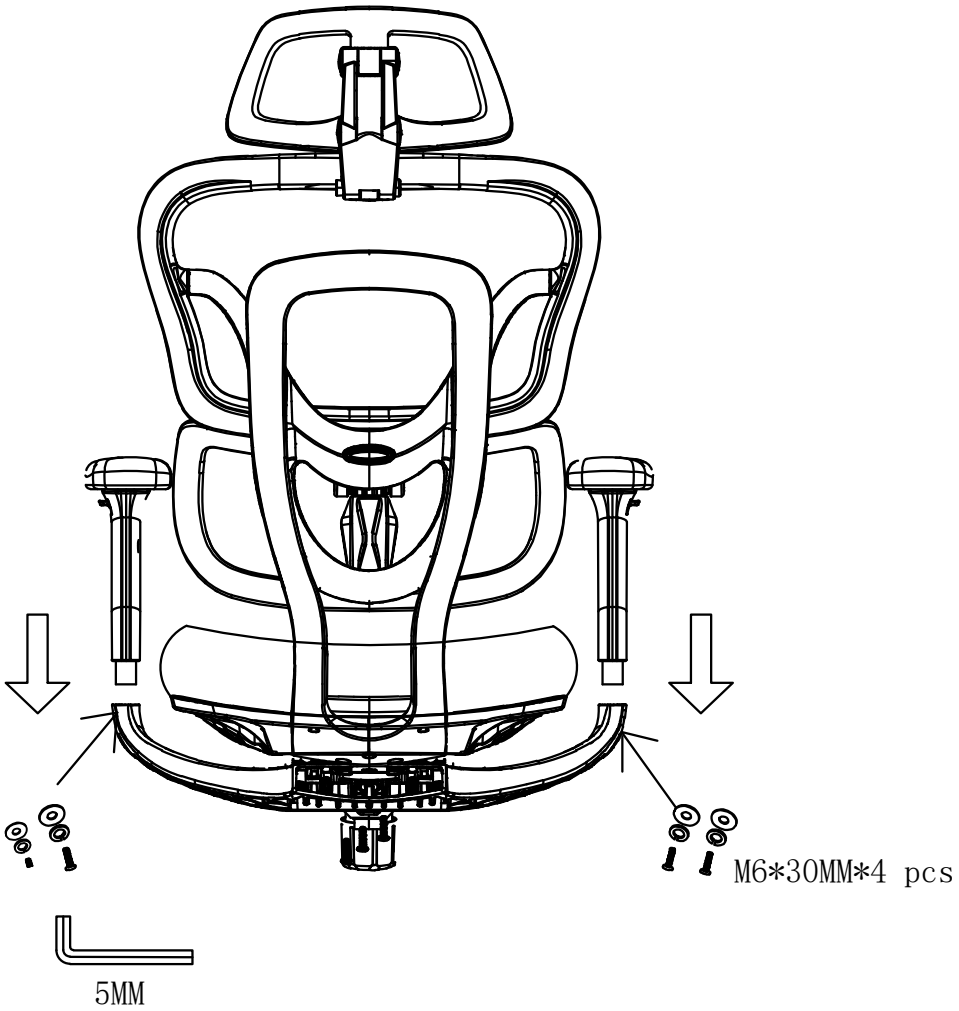

PART LIST

Screw	M6*30MM	*4
Wrench	5MM	*1

Install Instruction

⑤

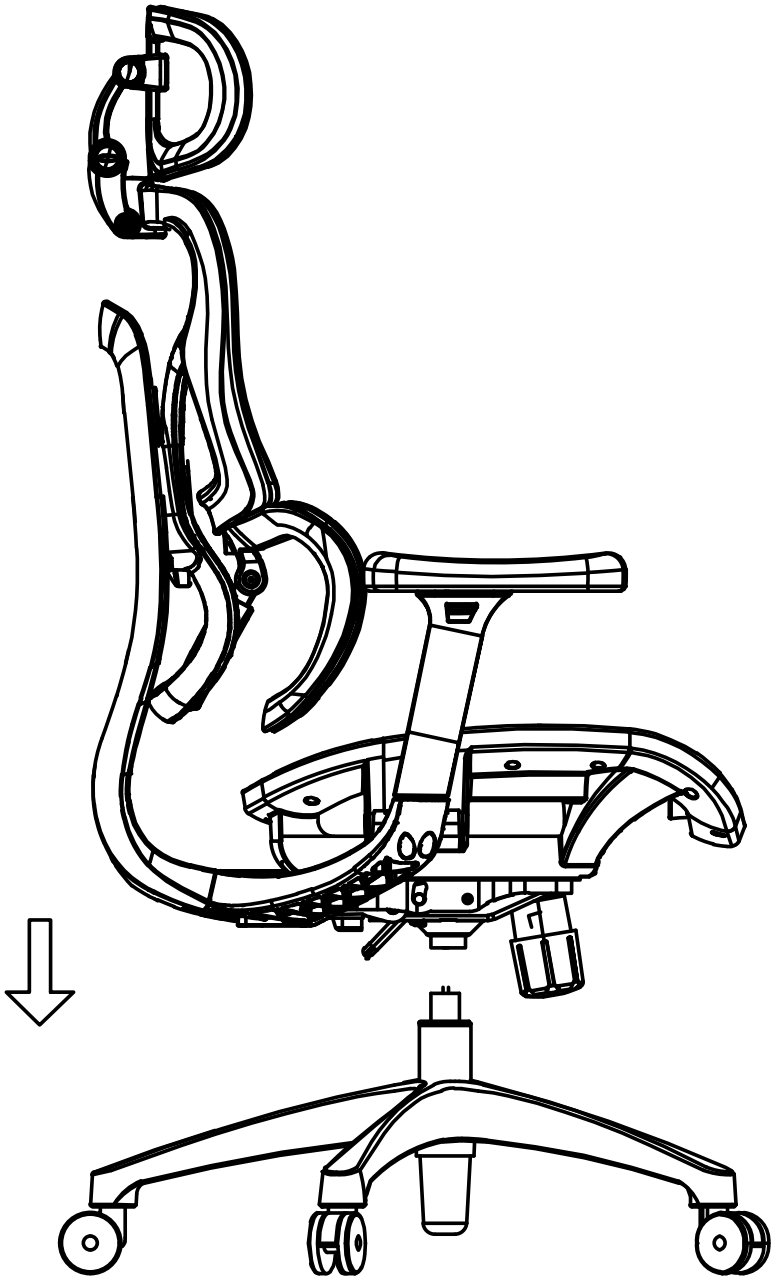

WARNING

Failure to follow these instructions may result in serious injury.

1. Maximum safe load 150kg.

2. This chair is designed for one person to use at a time.

3. Do not use this chair unless all bolts, screws and knobs are firmly secured.

4. Do not use if chair has visible structure damage.

5. Do not stand on chair or use the chair as a step ladder.

6. Keep all chair feet on the floor during use.