Wall-Mount Floating Shelf for A/V Accessories

Product IDs

1B-WALL-MOUNT-SHELF / 2B-WALL-MOUNT-SHELF

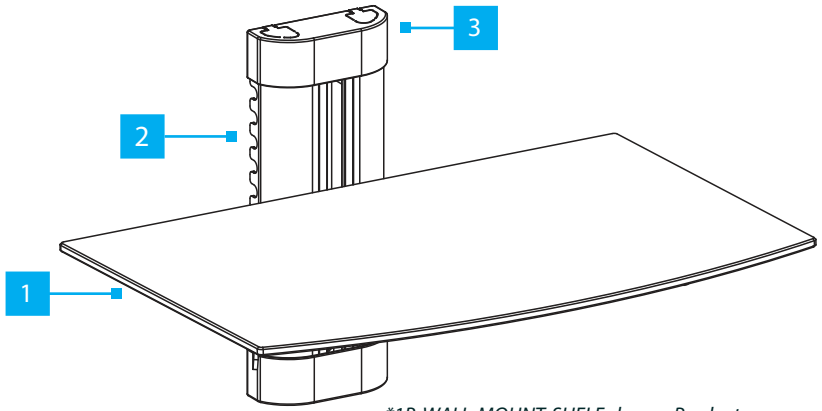

**1B-WALL-MOUNT-SHELF shown. Product may vary from image*

	Component	Function
1	Glass Shelf	• Place **A/V Accessories** or other media equipment • Allows **Height Adjustment** along the **Wall Bracket**
2	Side Covers	• Decorative panels with **Grooves** to help with cable management • Attach directly onto the **Wall Bracket**
3	End Caps	• Placed at the **Top** and **Bottom** of the **Side Covers** • Small **Tabs** can be broken-off to pass-trough cables for the mounted equipment

Product Information

For the latest manuals, product information, technical specifications, and declarations of conformance, please visit:

www.StarTech.com/1B-WALL-MOUNT-SHELF

www.StarTech.com/2B-WALL-MOUNT-SHELF

Requirements

- Phillips Head Screwdriver
- Electric Drill and 5/32in [4mm] or 5/16in [8mm] Drill Bits (Optional)
- Electronic Stud Finder (Optional)
- Spirit/Bubble Level (Optional)
- Pencil (Optional)

Package Contents

Product ID	1B-WALL-MOUNT-SHELF	2B-WALL-MOUNT-SHELF
Glass Shelf (**A**)	1	2
Support Brackets (**B**)	1	2
Wall Bracket (**C**)	1	1
Side Covers (**D**)	2	4
M4x6mm Screws (**E**)	2	4
M5x14mm Screws (**F**)	2	4
M6x8mm Screws (**G**)	4	8
Wall Mounting Screws (**H**)	3	4
Wall Anchors (**I**)	3	4
Endcaps (**J**)	2	2
Mounting Plate, Large (**K**)	1	2
Mounting Plate, Small (**L**)	1	2
Quick-Start Guide	1	1

Warnings!

- StarTech.com Ltd. is not responsible for any property damage and/or personal injury resulting from the installation procedures outlined in this technical document.
- Read the entire manual and ensure the instructions are fully understood before assembling and/or using this product.
- This product is designed to be installed on wooden studded, solid concrete, or cinder block walls only.
- Before adding equipment to this product, ensure this product has been properly mounted.
- Never operate this product if parts are missing or damaged.
- The mounting hardware included with this product might not be adequate for some wall structures. If lacking the necessary expertise to wall mount this product, contact a construction professional to install the wall mount or to provide specific mounting instructions for the wall structure.
- Ensure the weight of the equipment does not exceed the weight capacity of this product. If the weight capacity is exceeded, personal injury or damage to the

equipment are possibilities. These products can support the following weight: up to 7kg (15.4lb).

- Ensure the type of wall structure and mounting hardware will properly support the mounted equipment. Failure to do so might result in personal injury and/or equipment damage. The wall structure should be capable of supporting at least four times the weight of the mounted equipment.

Installation

Assembly

1B-WALL-MOUNT-SHELF (left) | 2B-WALL-MOUNT-SHELF (right)

1

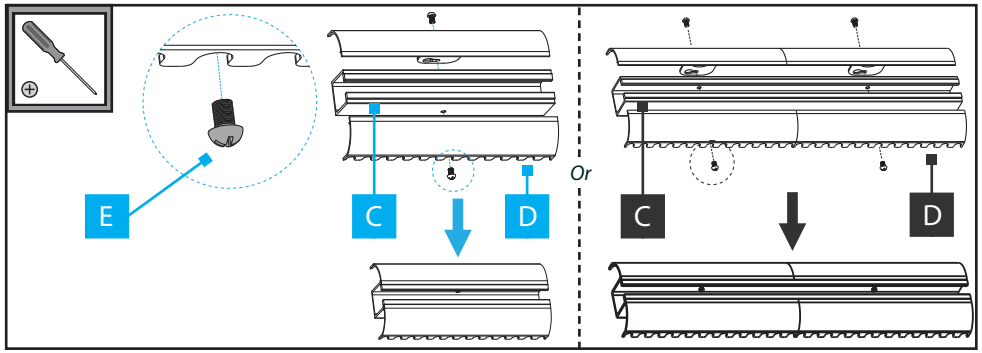

2

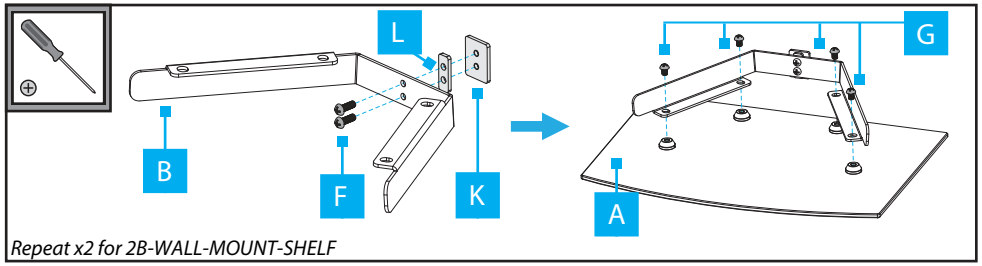

Wall Mounting

1B-WALL-MOUNT-SHELF (left) | 2B-WALL-MOUNT-SHELF (right))

Wooden Stud Wall or Concrete/Cinder Block Wall

1

Wooden Stud Wall

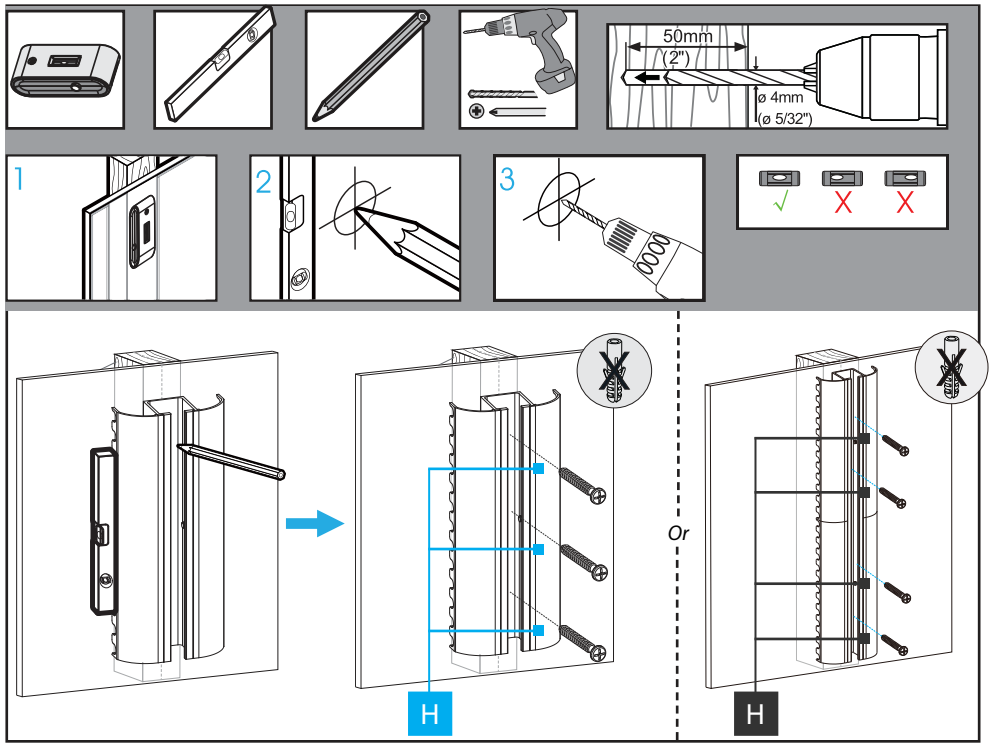

Concrete/Cinder Block Wall

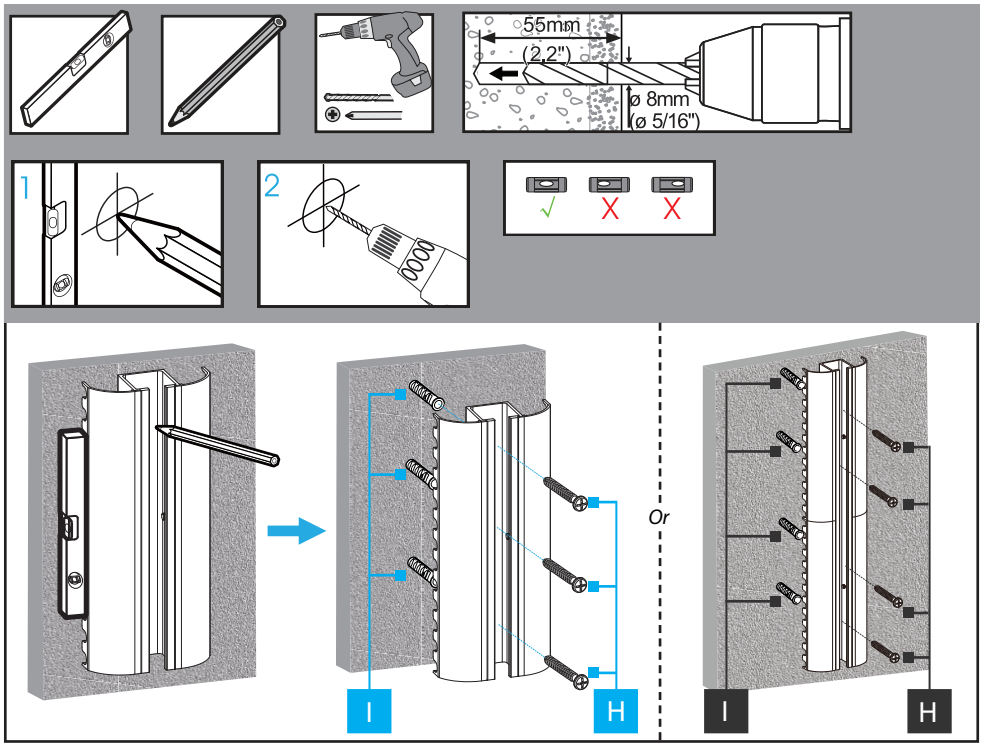

Shelf Mounting

1B-WALL-MOUNT-SHELF (left) | **2B-WALL-MOUNT-SHELF (right)**

1

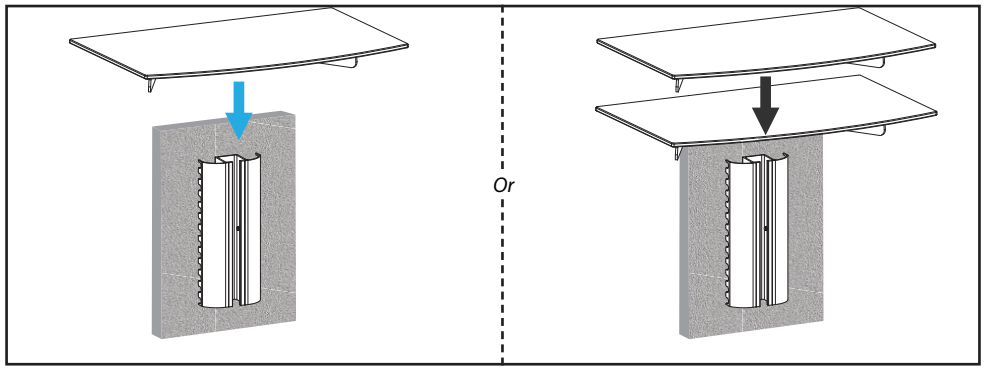

2

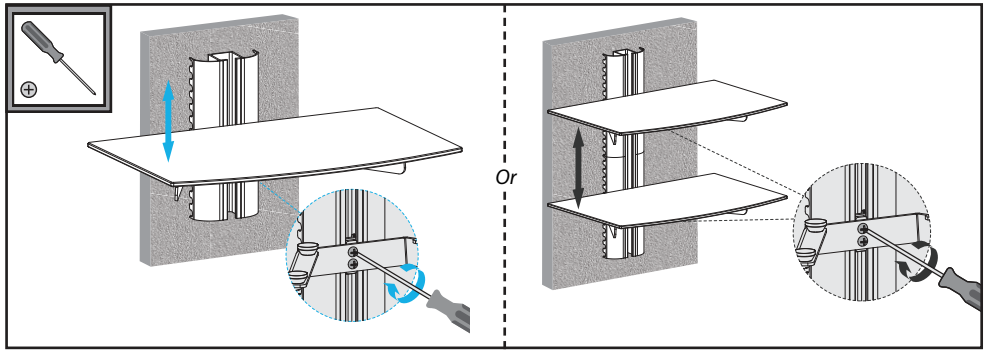

3

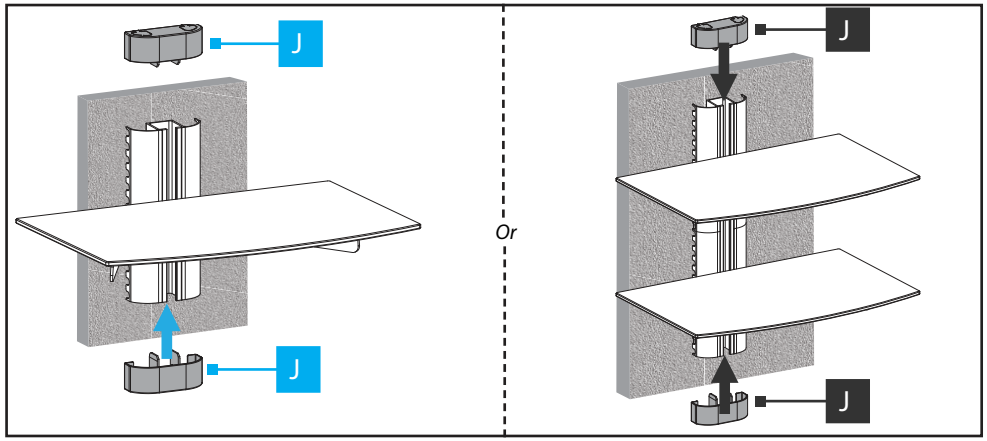

4

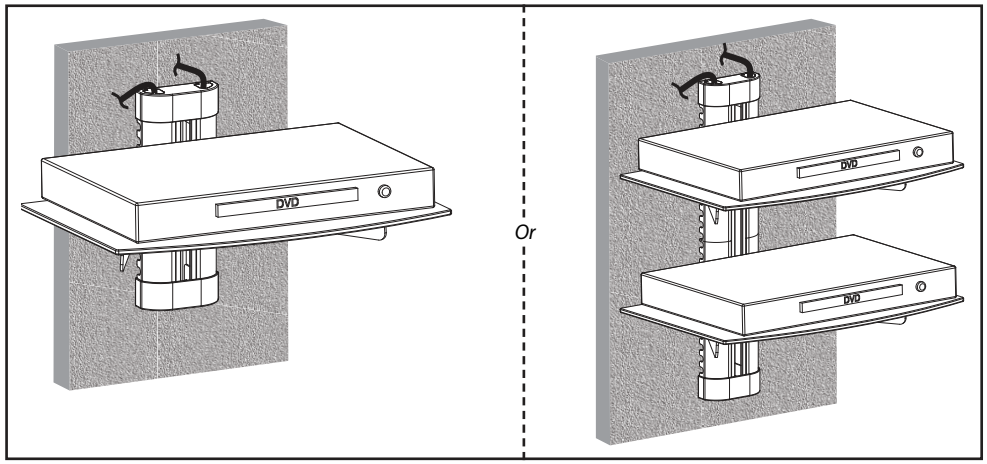

Regulatory Compliance

Use of Trademarks, Registered Trademarks, and other Protected Names and Symbols

This manual may make reference to trademarks, registered trademarks, and other protected names and/or symbols of third-party companies not related in any way to StarTech.com. Where they occur these references are for illustrative purposes only and do not represent an endorsement of a product or service by StarTech.com, or an endorsement of the product(s) to which this manual applies by the third-party company in question. StarTech.com hereby acknowledges that all trademarks, registered trademarks, service marks, and other protected names and/or symbols contained in this manual and related documents are the property of their respective holders.

PHILLIPS® is a registered trademark of Phillips Screw Company in the United States or other countries.

Warranty Information

This product is backed by a 2-year warranty.

For further information on product warranty terms and conditions, please refer to www.startech.com/warranty.

Limitation of Liability

In no event shall the liability of StarTech.com Ltd. and StarTech.com USA LLP (or their officers, directors, employees or agents) for any damages (whether direct or indirect, special, punitive, incidental, consequential, or otherwise), loss of profits, loss of business, or any pecuniary loss, arising out of or related to the use of the product exceed the actual price paid for the product. Some states do not allow the exclusion or limitation of incidental or consequential damages. If such laws apply, the limitations or exclusions contained in this statement may not apply to you.

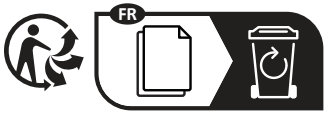

StarTech.com Ltd.
45 Artisans Crescent
London, Ontario
N5V 5E9
Canada

StarTech.com LLP
4490 South Hamilton Road
Groveport, Ohio
43125
U.S.A.

StarTech.com Ltd.
Unit B, Pinnacle 15
Gowerton Road
Brackmills,
Northampton
NN4 7BW
United Kingdom

StarTech.com Ltd.
Siriusdreef 17-27
2132 WT Hoofddorp
The Netherlands

FR: startech.com/fr
DE: startech.com/de
ES: startech.com/es
NL: startech.com/nl
IT: startech.com/it
JP: startech.com/jp