NEC

User's Manual

Large Format Display

MultiSync® M431-2

MultiSync® M501-2

MultiSync® M551-2

MultiSync® M651-2

MODEL: ME431, ME501, ME551, ME651, M431-2, M501-2, M551-2, M651-2

The regulations for this monitor applied to one of model names listed above.

Please find your model name on the label on the rear side of the monitor.

Table of Contents

Important Information 2
Recommended Use & Maintenance 8
Recommended Use 8
Maintenance 8

Chapter 1 Installation

Setup Overview 10
Mounting (for Customer) 13
Mounting (for Trained Installers) 14
Orientation 15
Ventilation Requirements 16
Attaching Mounting Accessories 17
Installing and Removing the Optional Table Top Stand 18

Chapter 2 Parts Names and Functions

Control Panel 21
Terminal Panel 22
Wireless Remote Control 24

Chapter 3 Connections

Wiring Diagram 27
Connecting to a Personal Computer 28
Connecting to a Computer with HDMI 28
Connecting a Computer with DisplayPort 28
Connecting to a Media Device with HDMI 29
Connecting to audio equipment with ARC function .. 29
HDMI-CEC (Consumer Electronics Control) 29
HDMI-CEC Command 30
Internal Video Sources 31
Media Player 31
Option Board for the Monitor 31
Using the USB Port 32

Chapter 4 Basic Operation

Power ON and OFF Modes 34
Operating Range for the Remote Control 35
Using Power Management 35
Showing the Information OSD 36
Switching Between Picture Modes 36
Setting the Aspect Ratio 37
OSD (On-Screen Display) Controls 38
Using the Media Player Menu 40
Media Player Menu 40
USB Drive Data and File Format Requirements 42

Chapter 5 Advanced Operation

Creating a Power Schedule 44
Using Picture Modes 45
Setting Security and Locking the Monitor Controls... 46
Password Security 46
Locking the Button Controls 48
Setting the Remote Control ID Function 50

Chapter 6 External Control

Controlling the Monitor via RS-232C 52
Controlling the Monitor via LAN 53
HTTP Browser 54
Commands 60
Proof of Play 61

Chapter 7 Troubleshooting

Screen Image and Video Signal Issues 63
No picture 63
Image persistence 63
The image is blinking 63
The image is unstable, unfocused or swimming is apparent 64
The image is not properly reproduced 64
Selected resolution is not displayed properly 64
Video contrast is either too high or too low 64
Hardware Issues 64
⏻ button does not respond 64
No sound 64
The remote control is not functioning 64
The SCHEDULE/OFF TIMER function is not working properly 64
Snowy picture, poor Sound in TV 65
The USB hub does not operate 65
Interference in TV 65
RS-232C or LAN control is not available 65
The monitor goes into standby automatically 65
Media player function does not recognize the USB storage device 65
Power Indicator Patterns 65
LED on the monitor is not lit (no blue or red color can be seen) 65
LED colors, except for blue, are blinking or glowing 65

Chapter 8 Specifications

Compatible Signal List 67
M431-2 68
M501-2 69
M551-2 70
M651-2 71

Appendix A Registration Information and Software License

Appendix B External Resources

Appendix C OSD Controls List

INPUT 76
PICTURE 78
AUDIO 81
SCHEDULE 82
SLOT 83
NETWORK 85
PROTECT 86
SYSTEM 89

Appendix D Manufacturer's Recycling and Energy Information

Disposing of your old NEC product 92
Energy Saving 92

Cable Information

CAUTION: Use the provided specified cables with this product so as not to interfere with radio and television reception.
For USB, please use a shielded signal cable with ferrite core.
For HDMI, RS-232C and DisplayPort, please use a shielded signal cable.
Use of other cables and adapters may cause interference with radio and television reception.

FCC Information

WARNING: The Federal Communications Commission does not allow any modifications or changes to the unit EXCEPT those specified by Sharp NEC Display Solutions of America, Inc. in this manual. Failure to comply with this government regulation could void your right to operate this equipment.

This equipment has been tested and found to comply with the limits for a Class B digital device, pursuant to part 15 of the FCC Rules. These limits are designed to provide reasonable protection against harmful interference in a residential installation. This equipment generates, uses, and can radiate radio frequency energy, and, if not installed and used in accordance with the instructions, may cause harmful interference to radio communications. However, there is no guarantee that interference will not occur in a particular installation. If this equipment does cause harmful interference to radio or television reception, which can be determined by turning the equipment off and on, the user is encouraged to try to correct the interference by one or more of the following measures:

- Reorient or relocate the receiving antenna.
- Increase the separation between the equipment and receiver.
- Connect the equipment into an outlet on a circuit different from that to which the receiver is connected.
- Consult your dealer or an experienced radio/TV technician for help.

If necessary, the user should contact the dealer or an experienced radio/television technician for additional suggestions.
The user may find the following booklet, prepared by the Federal Communications Commission, helpful: “How to Identify and Resolve Radio-TV Interference Problems.” This booklet is available from the U.S. Government Printing Office, Washington, D.C., 20402, Stock No. 004-000-00345-4.

SUPPLIER’S DECLARATION OF CONFORMITY

This device complies with Part 15 of the FCC Rules. Operation is subject to the following two conditions. (1) This device may not cause harmful interference, and (2) this device must accept any interference received, including interference that may cause undesired operation.

U.S. Responsible Party:	**Sharp NEC Display Solutions of America, Inc.**
Address:	**3250 Lacey Rd, Ste 500** **Downers Grove, IL 60515**
Tel. No.:	**(630) 467-3000**
Type of Product:	LCD Monitor
Equipment Classification:	Class B Peripheral
Model:	ME431, ME501, ME551, ME651

(For Customers in U.K.)

IMPORTANT

- The wires in this mains lead are coloured in accordance with the following code:

GREEN-AND-YELLOW:	**“Earth”**
BLUE:	**“Neutral”**
BROWN:	**“Live”**

- As the colours of the wires in the mains lead of this apparatus may not correspond with the coloured markings identifying the terminals in your plug proceed as follows:
  - The wire which is coloured GREEN-AND-YELLOW must be connected to the terminal in the plug which is marked by the letter **E** or by the safety earth symbol ⏚ or coloured green or green-and-yellow.
  - The wire which is coloured BLUE must be connected to the terminal which is marked with the letter **N** or coloured black.
  - The wire which is coloured BROWN must be connected to the terminal which is marked with the letter **L** or coloured red.
- Ensure that your equipment is connected correctly. If you are in any doubt consult a qualified electrician.

“WARNING: THIS APPARATUS MUST BE EARTHED.”

NOTE: (1) The contents of this manual may not be reprinted in part or whole without permission.
(2) The contents of this manual are subject to change without notice.
(3) Great care has been taken in the preparation of this manual; however, should you notice any questionable points, errors or omissions, please contact us.
(4) The image shown in this manual is indicative only. If there is inconsistency between the image and the actual product, the actual product shall govern.
(5) Notwithstanding articles (3) and (4), we will not be responsible for any claims on loss of profit or other matters deemed to result from using this device.
(6) This manual is commonly provided to all regions so they may contain descriptions that are pertinent for other countries.

Important Information

Safety Precautions and Maintenance

FOR OPTIMUM PERFORMANCE, PLEASE NOTE
THE FOLLOWING WHEN SETTING UP AND
USING THE LCD COLOR MONITOR:

About the Symbols

To ensure safe and proper use of the product, this manual uses a number of symbols to prevent injury to you and others as well as damage to property. The symbols and their meanings are described below. Be sure to understand them thoroughly before reading this manual.

WARNING	Failing to heed this symbol and handling the product incorrectly could result in accidents leading to major injury or death.
CAUTION	Failing to heed this symbol and handling the product incorrectly could result in personal injury or damage to surrounding property.

Examples of symbols

	This symbol indicates a warning or caution.
	This symbol indicates a prohibited action.
	This symbol indicates a mandatory action.

WARNING	
UNPLUG THE POWER CORD	Unplug the power cord if the product malfunctions. Should the product emit smoke or strange odors or sounds, or if the product has been dropped or the cabinet broken, turn off the product's power, then unplug the power cord from the power outlet. Contact your dealer for repairs. Never try to repair the product on your own. Doing so is dangerous.
DO NOT MODIFY	Do not open or remove the product's cabinet. Do not disassemble the product. There are high voltage areas in the product. Opening or removing product covers and modifying the product may expose you to electric shock, fire, or other risks. Refer all servicing to qualified service personnel.
PROHIBITED	Do not use the product if it has structural damage. If you notice any structural damage such as cracks or unnatural wobbling, please refer servicing to qualified service personnel. If the product is used in this condition, the product may fall or cause personal injury.

WARNING	
Handling the power cord.	
PROHIBITED	Do not scratch or modify the cord. • Do not place heavy objects on the cord. • Do not let the weight of the product rest on the cord. • Do not cover the cord with a rug, etc. • Do not bend, twist or pull the cord with excessive force. • Do not apply heat to the cord. Handle the power cord with care. Damaging the cord could lead to fire or electric shock. If the cord gets damaged (exposed core wires, broken wires, etc.), turn off the product's power, then unplug the power cord from the power outlet. Ask your dealer to replace it.
DO NOT TOUCH	Do not touch the power plug if you hear thunder. Doing so could result in electric shock.
DO NOT TOUCH WITH WET HANDS	Do not connect or disconnect the power cord with wet hands. It may cause an electric shock.
REQUIRED	Please use the power cord provided with this product in accordance with the power cord table. Do not exceed the product's specified power supply voltage where it is installed. Doing so could result in a fire or electric shock. Please refer to the power supply voltage information in the specification. If a power cord is not supplied with this product, please contact us. For all other cases, please use the power cord with the plug style that matches the power socket where the product is located. The compatible power cord corresponds to the AC voltage of the power outlet and has been approved by, and complies with, the safety standards in the country of purchase.
MUST BE EARTHED	This equipment is designed to be used in the condition of the power cord connected to the earth. If the power cord is not connected to the earth, it may cause electric shock. Please make sure the power cord is connected to the wall outlet directly and earthed properly. Do not use a 2-pin plug converter adapter.
REQUIRED	For proper installation it is strongly recommended to use a trained service person. Failure to follow the standard installation procedures could result in damage to the product or injury to the user or installer.
REQUIRED	Please install the product in accordance with the following information. This product cannot be used or installed without the table top stand or other mounting accessory for support. When transporting, moving, or installing the product, please use as many people as necessary to be able to lift the product by the four handles without causing personal injury or damage to the product. • We recommend two or more people for the M431-2/M501-2/M551-2 and four or more people for the M651-2. • M651-2: DO NOT use this product on the floor with the table top stand. Please use this product on a table or with a mounting accessory for support. Please refer to the instructions included with the optional mounting equipment for detailed information about attaching or removing. Do not cover the vent on the product. Improper installation of the product may result in damage to the product, an electric shock or fire.

WARNING

REQUIRED

Do not install the product in the locations below:

- Poorly ventilated spaces.
- Near a radiator, other heat sources, or in direct sunshine.
- Continual vibration areas.
- Humid, dusty, steamy, or oily areas.
- An environment where there are corrosive gases (sulfur dioxide, hydrogen sulfide, nitrogen dioxide, chlorine, ammonia, ozone, etc.).
- Outdoors.
- High-temperature environment where humidity changes rapidly and condensation is likely to occur.
- A ceiling or wall that is not strong enough to support the product and mounting accessories.

Do not mount the product upside down.

REQUIRED

Prevent tipping and falling for earthquakes or other shocks.
To prevent personal injury or damage to the product caused by tipping over due to earthquakes or other shocks, make sure to install the product in a stable location and take measures to prevent falling.
The measures to prevent falling and tipping are intended for reducing the risk of injury, but may not guarantee the effectiveness against all earthquakes.

The product may tip causing personal injury.

- When using the product with the optional table top stand, fasten the product to a wall using a cord or chain that can support the weight of the product in order to prevent the product from falling.
  Depending on the table top stand, the stand has the structure for preventing tipping.
  Please refer to the table top stand manual.
- Be sure to remove the cord or chain from the wall before moving the product to prevent personal injury or damage to the product.

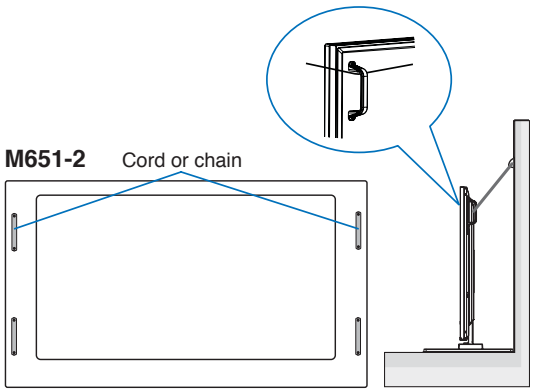

The product may fall causing personal injury.

- Do not attempt to hang the product using an installation safety wire.
- Please install the product in an area on the wall or ceiling strong enough to support the weight of the product.
- Prepare the product using mounting accessories, such as hook, eyebolt, or mounting parts, and then secure the product with a safety wire. The safety wire must not be tight.
- Please make sure the mounting accessories are strong enough to support the product weight and size before installing it.

WARNING	
REQUIRED	Stability Hazard. The product may fall, causing serious personal injury or death. To prevent injury, this product must be securely attached to the floor/wall in accordance with the installation instructions. Many injuries, particularly to children, can be avoided by taking simple precautions such as: • ALWAYS use stands or installation methods recommended by the manufacturer of the product set. • ALWAYS use furniture that can safely support the product. • ALWAYS ensure the product is not overhanging the edge of the supporting furniture. • ALWAYS educate children about the dangers of climbing on furniture to reach the product or its controls. • ALWAYS route cords and cables connected to your product so they cannot be tripped over, pulled or grabbed. • NEVER place a product in an unstable location. • NEVER place the product on tall furniture (for example, cupboards or bookcases) without anchoring both the furniture and the product to a suitable support. • NEVER place the product on cloth or other materials that may be located between the product and supporting furniture. • NEVER place items that might tempt children to climb, such as toys and remote controls, on the top of the product or furniture on which the product is placed. If the existing product is going to be retained and relocated, the same considerations as above should be applied.
PROHIBITED	Do not place this product on a sloping or unstable cart, stand or table. Doing so could lead to falling or tipping and cause personal injury.
PROHIBITED	Do not insert objects of any kind into the cabinet slots. It may cause electric shock, fire, or product failure. Keep objects away from children and babies. If objects get into the cabinet slot, turn off the product's power, then unplug the power cord from the power outlet. Contact your dealer for repairs.
DO NOT WET	Do not spill any liquids into the cabinet or use your product near water. Immediately turn off the power and unplug your product from the wall outlet, then refer servicing to qualified service personnel. It may cause an electric shock or start a fire. Do not install the product under equipment that discharges water, such as air conditioners.
PROHIBITED	Do not use flammable gas sprays to remove dust when cleaning the product. Doing so could lead to a fire.
REQUIRED	Securely fasten the Option Board. Ensure the Option Board is securely fastened using the original screws to prevent the Option Board from falling out the product. A falling Option Board may expose you to danger.
PROHIBITED	Usage of the product must not be accompanied by fatal risks or dangers that, could lead directly to death, personal injury, severe physical damage or other loss, including nuclear reaction control in nuclear facility, medical life support system, and missile launch control in a weapon system.

CAUTION	
Handling the power cord.	
REQUIRED	The monitor should be installed close to an easily accessible power outlet.
REQUIRED	When connecting the power cord to the product's AC IN terminal, make sure the connector is fully and firmly inserted. An incomplete connection of the power cord may cause overheating of the plug; it allows dust to get on the plug connection, which can lead to a fire. Touching the pins of a partially inserted plug may lead to an electric shock. Fasten the power cord to the product by attaching the screw and clamp to prevent loose connection. (Recommended Fasten Force: 120 - 190 N•cm).
REQUIRED	Handling the power cord by following below to avoid fire or electric shock. • When connecting or disconnecting the power cord, pull the power cord out by holding onto its plug. • Unplug the power cord from the power outlet before cleaning the product or when not planning to use the product for an extended time. • When the power cord or plug is heat or damaged, unplug the power cord from the power outlet, and contact a qualified service person.
REQUIRED	Regularly dust off the power cord by using a soft dry cloth.
REQUIRED	Before moving the product, make sure the product power is off, then unplug the power cord from the power outlet and check that all cables connecting the product to other devices are disconnected.
PROHIBITED	Do not use the power cord with a power tap. Adding an extension cord may lead to fire as a result of overheating.
PROHIBITED	Do not bind the power cord and the USB cable. It may trap heat and cause a fire.
PROHIBITED	Do not connect to a LAN with excessive voltage. When using a LAN cable, do not connect to a peripheral device with wiring that might have excessive voltage. Excessive voltage on the LAN port may cause an electric shock.
PROHIBITED	Do not climb on the table where the product is installed. Do not install the product on a wheeled table if the wheels on the table have not been properly locked. The product may fall, causing damage to the product or personal injury.
REQUIRED	Installation, removal, and height adjustment of the optional table top stand. • When installing the table top stand, handle the unit with care to avoid pinching your fingers. • Installing the product at the wrong height can cause tipping. Please install your product at proper height to prevent personal injury or damage to the product.
PROHIBITED	Do not push or climb on the product. Do not grab or hang onto the product. Do not rub or tap the product with hard objects. The product may fall, causing damage to the product or personal injury.
PROHIBITED	Do not hit or strike the screen. Do not push against the screen with a pointed object. It can cause serious damage to the product or personal injury.

CAUTION	
REQUIRED	Incorrect usage of batteries can result in leaks or bursting. • Use the specified batteries only. • Insert batteries matching the (+) and (–) signs on each battery to the (+) and (–) signs of the battery compartment. • Do not mix battery brands. • Do not combine new and old batteries. This can shorten battery life or cause liquid leakage of batteries. • Remove dead batteries immediately to prevent battery acid from leaking into the battery compartment. If leaked battery fluid gets on your skin or clothing, rinse immediately and thoroughly. If it gets into your eye, bathe your eye well rather than rubbing and seek medical treatment immediately. Leaked battery fluid that gets into your eye or your clothing may cause a skin irritation or damage your eye. • If you will not use the remote control for a long time, remove the batteries. • Leaving a battery in an extremely high temperature surrounding environment, or a battery subject to extremely low air pressure, that can result in an explosion or the leakage of flammable liquid or gas. • Properly dispose of depleted batteries. Disposal of a battery into water, fire, or a hot oven, or mechanically crushing, cutting, or modifying a battery can result in an explosion. • Do not short-circuit the batteries. • Do not charge the batteries. The batteries provided are not rechargeable. • Contact your dealer or local authorities when disposing of batteries.
PROHIBITED	Do not stay in contact with the parts of the product that become hot for long periods of time. Doing so may result in low-temperature burns.
REQUIRED	Suitable for entertainment purposes at controlled luminous environments, to avoid disturbing reflections from the screen.
REQUIRED	We recommend wiping clean the ventilation holes a minimum of once a month. Failure to do so could lead to fire or electric shock or damage to the product.
REQUIRED	To ensure the product's reliability, please clean the ventilation holes at the rear side of the cabinet at least once a year to remove dirt and dust. Failure to do so could lead to fire or electric shock or damage to the product.
REQUIRED	Avoid locations with extreme temperatures and humidity. Failure to do so could lead to fire or electric shock or damage to the product. The usage environment for this product is as follows: • The operating temperature: 0 °C to 40 °C/32 °F to 104 °F/humidity: 20 to 80% (without condensation) • The storage temperature: -20 °C to 60 °C/-4 °F to 140 °F/humidity: 10 to 80% (without condensation)

Power Cord Table

Plug Type	North America	European Continental	U.K.	Chinese	Japanese
Plug Shape	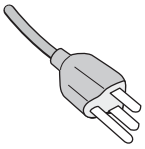	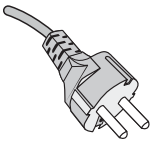	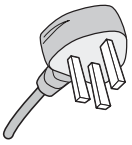	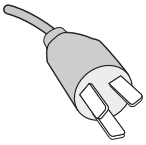	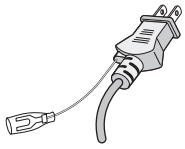
Region	U.S.A./Canada	EU	U.K.	China	Japan
Voltage	120*	230	230	220	100

* Please use this power cord under 125 V power supply.

NOTE: This product can only be serviced in the country where it was purchased.

Recommended Use & Maintenance

Recommended Use

Ergonomics

To realize the maximum ergonomic benefits, we recommend the following:

- For optimum performance of the monitor, allow 20 minutes for warming up. Avoid reproduction of still patterns on the monitor for long periods of time to avoid image persistence (after image effects).
- Rest your eyes periodically by focusing on an object at least 5 feet away. Blink often.
- Position the monitor at a 90° angle to windows and other light sources to minimize glare and reflections.
- Adjust the monitor's brightness, contrast and sharpness controls to enhance readability.
- Get regular eye checkups.
- Use the preset Size and Position controls with standard input signals.
- Use the preset color settings.
- Use non-interlaced signals.
- Do not view the primary color blue on a dark background. It is difficult to see and may cause eye fatigue due to insufficient contrast.

Maintenance

Cleaning the LCD Screen

- When the LCD screen is dusty, please gently wipe with a soft cloth.
- Clean the LCD screen surface with a lint-free, non-abrasive cloth. Avoid using any cleaning solution or glass cleaner!
- Please do not rub the LCD screen with a hard or abrasive material.
- Please do not apply pressure to the LCD screen surface.
- Please do not use OA cleaner as it will cause deterioration or discoloration on the LCD screen surface.

Cleaning the Cabinet

- Unplug the power supply.
- Gently wipe the cabinet with a soft cloth.
- To clean the cabinet, dampen the cloth with a neutral detergent and water, wipe the cabinet and follow with a dry cloth.

NOTE: DO NOT clean with benzene thinner, alkaline detergent, alcoholic system detergent, glass cleaner, wax, polish cleaner, soap powder, or insecticide. Rubber or vinyl should not be in contact with the cabinet for an extended period of time.
These types of fluids and materials can cause the paint to deteriorate, crack or peel.

Chapter 1 Installation

This Chapter Includes:

- ⇨ “Setup Overview” on page 10
- ⇨ “Mounting (for Customer)” on page 13
- ⇨ “Changing the Logo Ornament Position” on page 13
- ⇨ “Mounting (for Trained Installers)” on page 14
- ⇨ “Orientation” on page 15
- ⇨ “Ventilation Requirements” on page 16
- ⇨ “Attaching Mounting Accessories” on page 17
- ⇨ “Installing and Removing the Optional Table Top Stand” on page 18

Please read “Important Information” carefully before installation.

NOTE:

For box contents, please refer to the Setup Manual provided in the box.

Product warranty does not cover damage caused by improper installation. Failure to follow these recommendations could result in voiding the warranty.

Setup Overview

1. Determine the installation location

NOTE: To avoid scratching the LCD panel, always place a soft cloth, such as a blanket that is larger than the monitor's screen area, on the table before laying the monitor face down when installing the monitor stand or mounting accessories.

2. Install the remote control batteries

The remote control is powered by two 1.5 V AAA batteries.

To install or replace batteries:

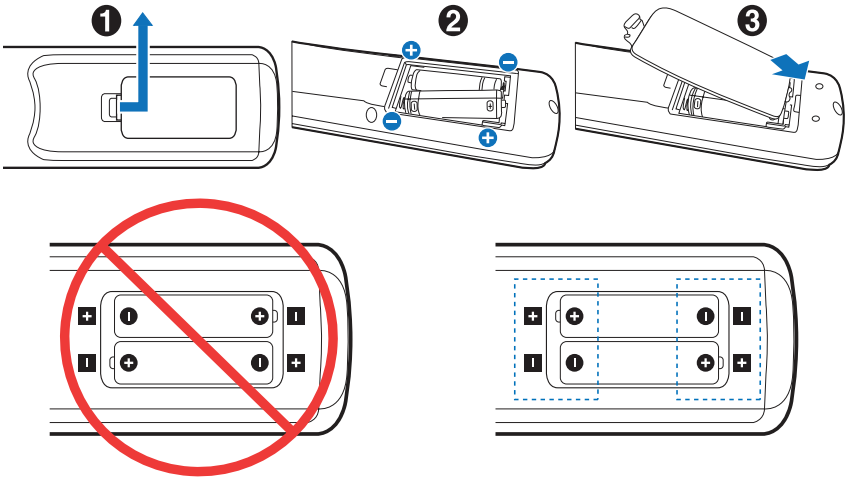

NOTE:
- If you do not intend to use the remote control for a long period of time, remove the batteries.
- Use manganese or alkaline batteries only.

3. Connect external equipment (see page 26)

- To protect the external equipment, turn off the main power before making connections.
- Refer to the user's manual of your equipment for further information.

NOTE: Do not connect/disconnect cables when turning on the monitor or other external equipment as this may result in loss of image.

4. Connect the supplied power cord

NOTE: Please make sure that enough power is supplied to the monitor. Please refer to the “Power Supply” in the specification (See “M431-2” on page 68, “M501-2” on page 69, “M551-2” on page 70 and “M651-2” on page 71).

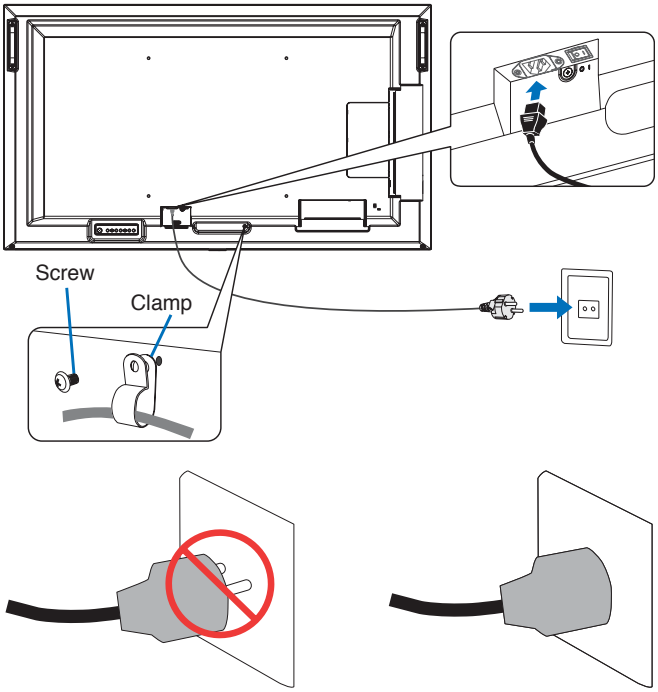

5. Cable information

CAUTION: Use the provided specified cables with this product so as not to interfere with radio and television reception.
For USB, please use a shielded signal cable with ferrite core.
For HDMI, RS-232C and DisplayPort, please use a shielded signal cable.
Use of other cables and adapters may cause interference with radio and television reception.

6. Turn on the power for the monitor and the external equipment

Switch on the monitor power first.

7. Operate the attached external equipment

Select the input source for the attached equipment to show the image signal on screen.

NOTE: Under the conditions below, DDC communication is disabled.

- Turning off the monitor’s main power.
- When [MODE] in [POWER SAVING SETTINGS] has been set to [LOW POWER] in the OSD menu, and the monitor is turned off or shift to the power saving mode.

8. Adjust the sound

Make volume adjustments when required.

9. Adjust the picture settings (see page 78)

If necessary, make adjustments to the backlight, colors, contrast, and image position in the OSD PICTURE menu.

10. For long-term use

The backlight used for this monitor has a limited life and its brightness decreases with the usage time.

Also, if the same still image is shown for a long time, “Image Persistence” may occur. “Image Persistence” is a phenomenon in which the image of an LCD remains visible after the device has been turned off.

The “Image Persistence” is gradually eliminated by changing the screen, but if the same screen is shown for too long, the “Image Persistence” will not disappear.

To avoid shortening this monitor’s lifetime, please note the following:

- Turn off the main power of this monitor when not in use.
- Use the ⏻ button on the main unit or the STANDBY button on the remote control to put the unit in standby mode.
- Use [POWER SAVE SETTINGS] in the [PROTECT] OSD menu. When there is no input signal the monitor will automatically switch to power save mode.
- If you cover the panel surface of the main unit with a protective cover made of glass or acrylic, the panel surface will be sealed and the internal temperature will rise.
  Use the screen saver, the computer’s power management function, or reduce the monitor’s brightness to prevent the internal temperature from rising.
- To reduce the load on the LCD panel, use [SCREEN SAVER] in the [PROTECT] OSD menu.
- Use [SCHEDULE] in the OSD menu to automatically power the monitor on or stand by at any time.

NOTE: When using the schedule function, be sure to set [DATE & TIME] in the [SYSTEM] OSD menu.

Mounting (for Customer)

Please contact your supplier as they may be able to provide a list of qualified installation professionals. Mounting on a wall or ceiling and hiring a technician is the customer's responsibility.

Maintenance

- Periodically check for loose screws, gaps, distortions, or other problems that may occur with the mounting equipment. If a problem is detected, please refer to qualified personnel for service.
- Regularly check the mounting location for signs of damage or weakness that may occur over time.

Changing the Logo Ornament Position

When using the monitor in the portrait position, the logo ornament position can be changed.

Removing the logo ornament: unscrew the installed screw then take off the logo ornament.

Attaching the logo ornament: adjust the protrusions inside of the logo ornament into the protrusion holes on the bezel. Make sure the hole for the screw on the logo ornament and the hole for the screw on the bezel are aligned. Install the logo ornament with the screw which is used for installing the logo ornament. (Recommended Fasten Force: 30-40 N•cm).

NOTE: Do not use any other screw to install the logo ornament.

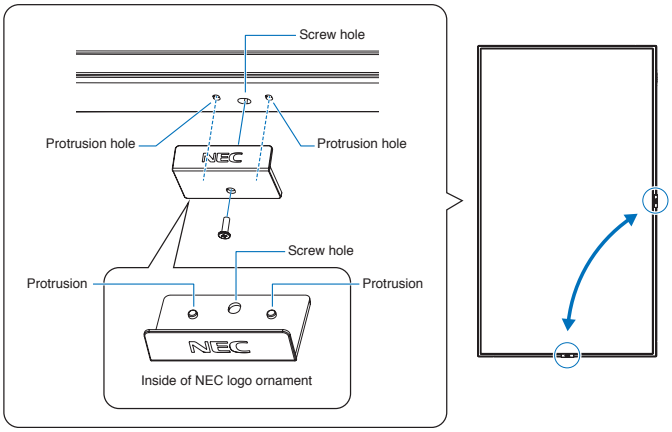

Mounting (for Trained Installers)

Carefully inspect the location where the unit is to be mounted. Not all walls or ceilings are capable of supporting the weight of the unit. The weight of this monitor is provided in the specifications (see “M431-2” on page 68, “M501-2” on page 69, “M551-2” on page 70 and “M651-2” on page 71). Product warranty does not cover damage caused by improper installation, re-modeling, or natural disasters. Failure to comply with these recommendations could result in voiding the warranty.

To ensure safe installation, use two or more brackets to mount the unit. Mount the unit to at least two points on the installation location.

Allow for adequate ventilation or provide air conditioning around the monitor, so that heat can properly dissipate away from the monitor and from the mounting equipment.

Please note the following when mounting on a wall or ceiling:

- When using mounting accessories other than those that we approved, they must comply with the VESA-compatible (FDMIv1) mounting method.
- We recommend mounting interfaces that comply with UL1678 standard in North America.
- For detailed information, refer to the instructions included with the mounting equipment.

We strongly recommend using the screws as shown below.
If using screws longer than below mentioned, check the depth of the hole.

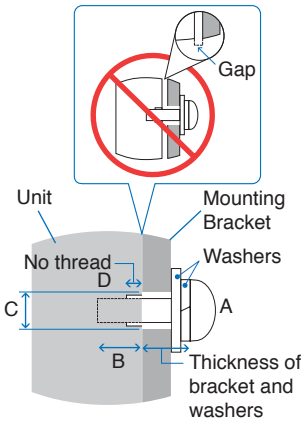

	Screw Size (A)	(B)		Bracket Hole (C)	No Thread (D)	Recommended Fasten Force
M431-2	M6 (4 pcs)	10-12 mm	+ thickness of bracket and washer in length	≤ Ø 8.5 mm	3.5 mm	390-670 N•cm
M501-2					1 mm	
M551-2						
M651-2	M8 (4 pcs)	16-18 mm		≤ Ø 12 mm		950-1600 N•cm

NOTE: When used in a video wall configuration for a long time, slight expansion of the monitors may happen due to temperature changes. It is recommended that a gap of over one millimeter is kept between adjacent monitor edges.

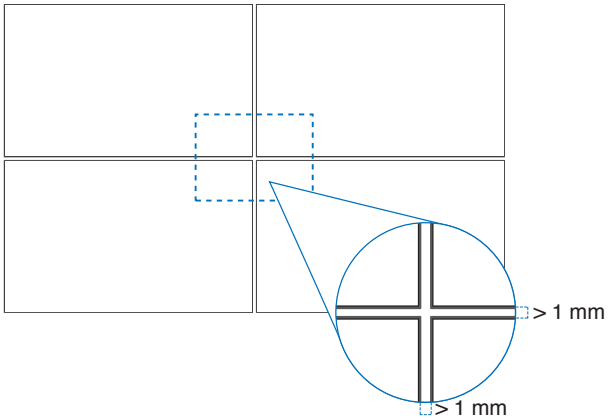

Installing a safety wire

NOTE: When installing, do not apply pressure to the LCD panel or excessive force to any part of the monitor by pushing or leaning on it. This may cause the monitor to become distorted or damaged.

Handles for safety wire

Attach the safety wire to the handles shown in the figure below.

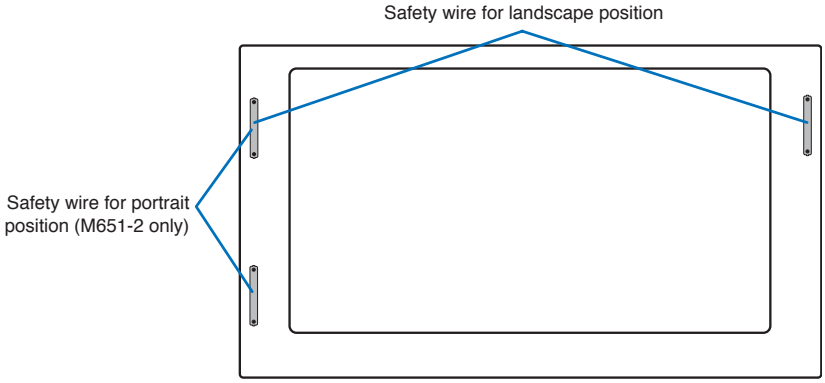

Orientation

- When using the monitor in the portrait position, it should be rotated counterclockwise so that the right side is moved to the top and the left side is moved to the bottom. Improper ventilation may shorten the lifetime of the monitor.
- If installed in the wrong orientation, heat may be trapped inside the main unit and the lifetime of the monitor may be shortened.
- It cannot be installed upside down.

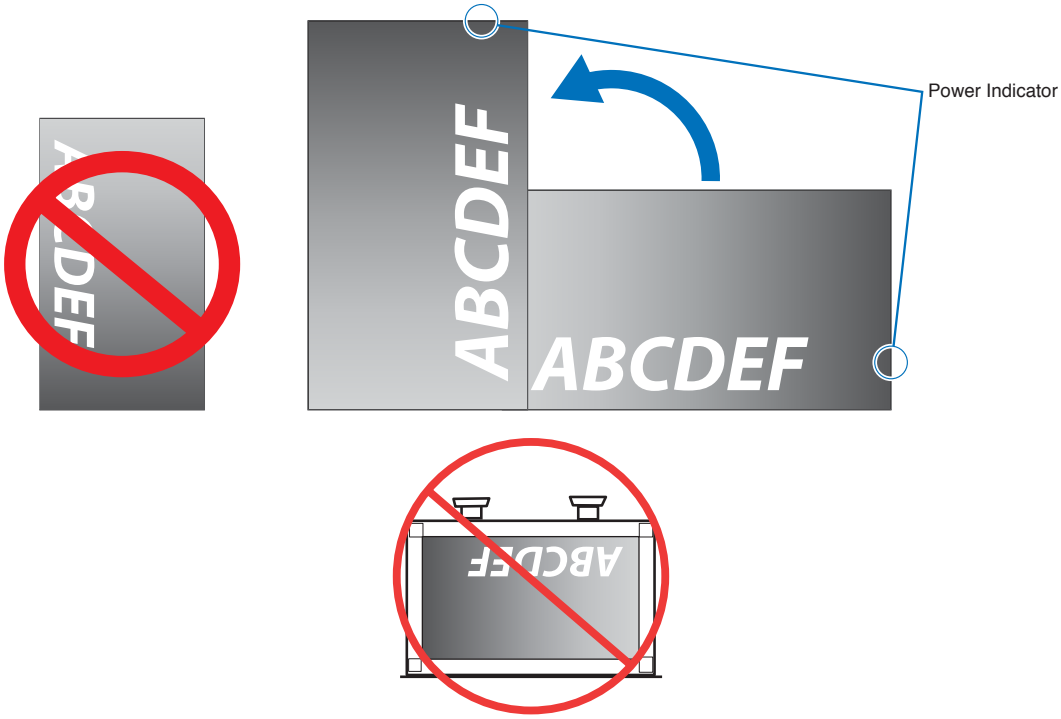

Ventilation Requirements

When mounting in an enclosed space or recessed area, leave adequate room between the monitor and the enclosure to allow heat to disperse, as shown below.

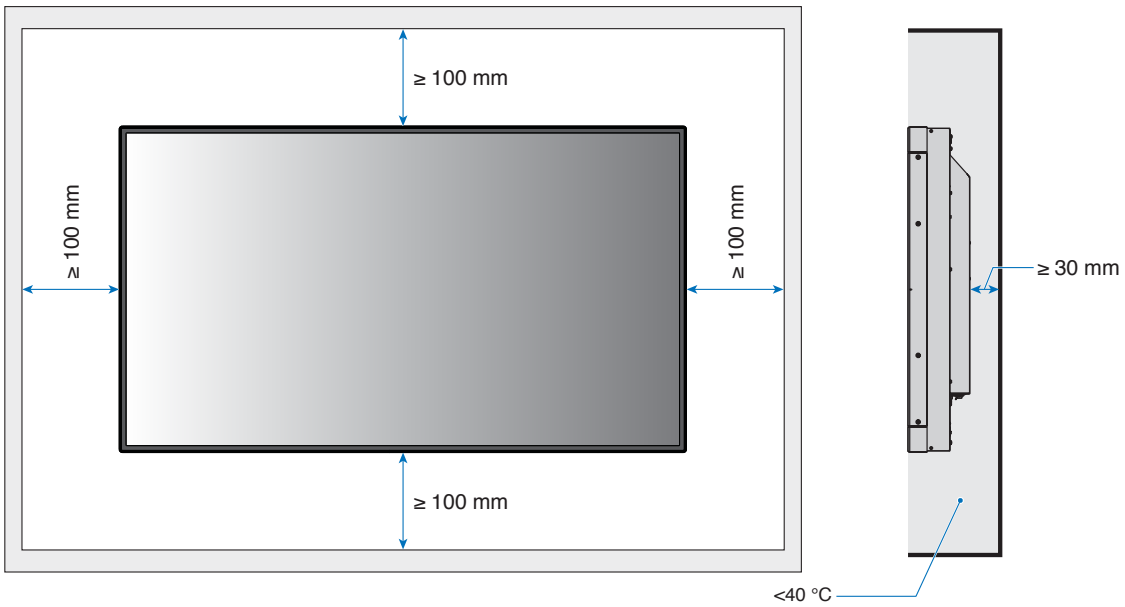

NOTE:
- Allow adequate ventilation or provide air conditioning around the monitor, so that heat can properly dissipate away from the unit and the mounting equipment; especially when you use monitors in a multiple screen configuration.
- This monitor has internal temperature sensors.

  If the monitor overheats, a “Caution” warning appears. If the “Caution” warning appears, stop using the unit, turn off the power and allow it to cool.

  If the monitor is used in an enclosed area or if the LCD panel is covered with a protective screen, and the temperature is higher than the normal operating temperature, please turn the cooling fan to [ON] within the [FAN CONTROL] menu within the OSD (see page 86).

Attaching Mounting Accessories

The monitor is designed for use with the VESA mounting system. Be careful to avoid tipping the monitor when attaching accessories.

VESA Mounting Interface M6 (M431-2/M501-2/M551-2), M8 (M651-2)

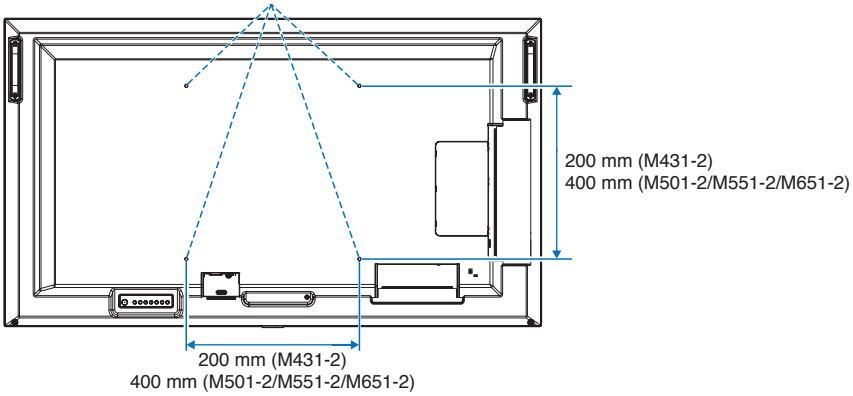

Mounting accessories can be attached with the monitor in the face down position. To avoid scratching the LCD panel, always place a soft cloth, such as a blanket that is larger than the monitor's screen area, on the table before laying the monitor face down. Make sure there is nothing on the table that can damage the monitor.

When using mounting accessories other than those that are compliant and approved by us, they must comply with the VESA Flat Display Mounting Interface Standard (FDMI).

NOTE: Prior to installation, place the monitor face down on a flat even surface that is larger than the monitor screen. Use a sturdy table that can easily support the weight of the monitor.

Using a Wall Mount Adapter (M431-2 only)

If the mounting accessory interferes with ventilation holes, use the included wall mount adapters (Dia. 14 mm) and screws. If the adapter screws are too long, include a washer to reduce the depth. Washer not included.

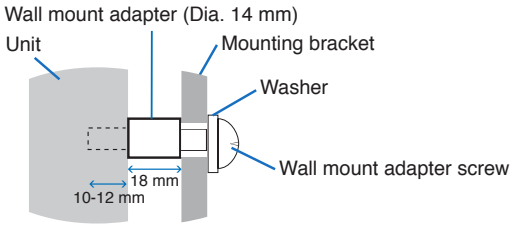

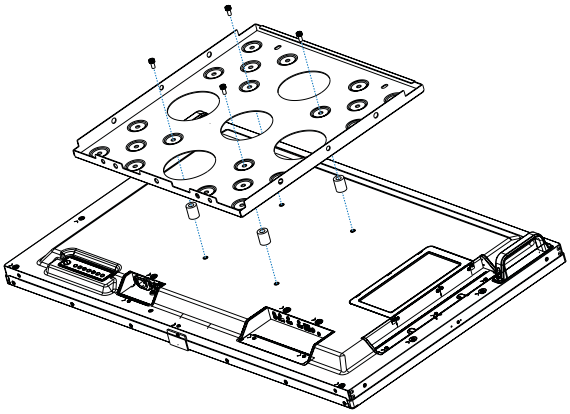

NOTE: Pictured mounting accessories may not be available in some countries.

Installing and Removing the Optional Table Top Stand

For installation, follow the instructions included with the stand or mounting equipment. Use only those devices recommended by the manufacturer.

NOTE:
- M431-2, M501-2, and M551-2 use ST-43M. M651-2 use ST-65M.
- For the ST-43M, ONLY use screws which are included with the optional table top stand.
  For the ST-65M, ONLY use thumbscrews and attach the stand holders which are included with the optional table top stand. Install the stand so the long end of the feet face forward.
- The monitor can only be used in the landscape orientation with the tabletop stand.

M431-2 M501-2 M551-2	ST-43M (screws are included)
M651-2	ST-65M (thumbscrews, screws, and stand holders are included)

M651-2

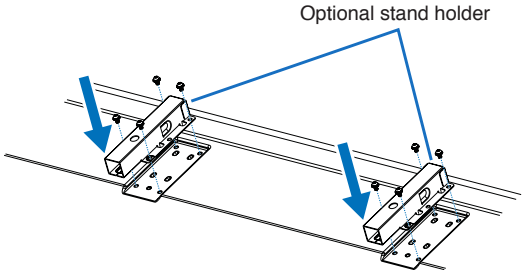

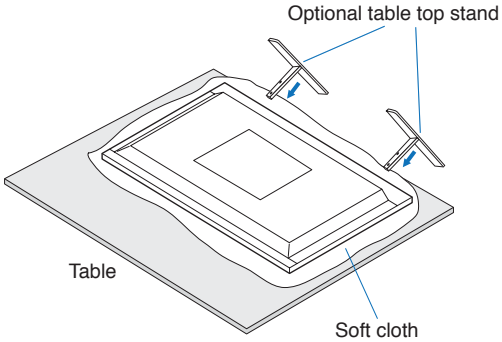

M431-2/M501-2/M551-2

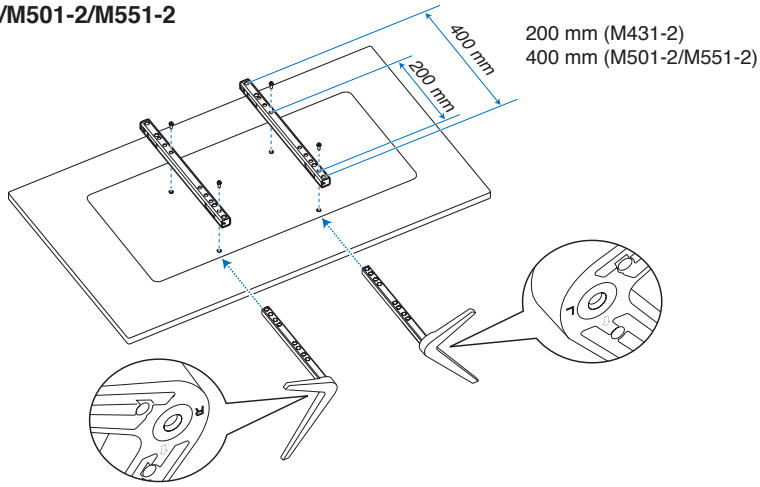

Height adjustment (M551-2)

1. The lines on the stand pole are indicators of the height adjustment (**Figure 1**). Please adjust the pipe to the lines.

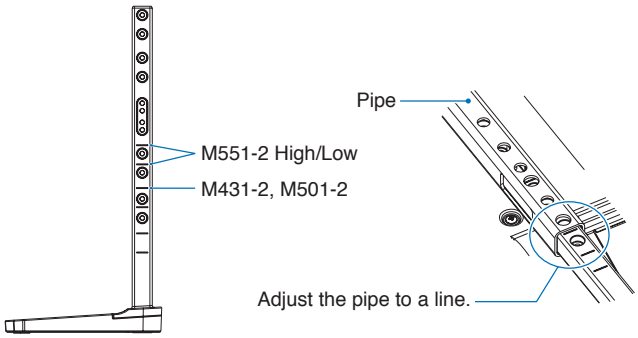

Figure 1

2. Please install the stand pole and the pipe with included screws. Please screw the two screw holes at the pipe (**Figure 2**).

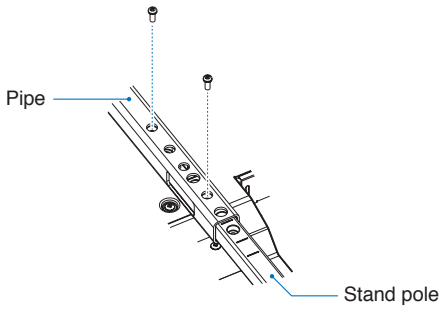

Figure 2

Chapter 2 Parts Names and Functions

This Chapter Includes:

- ⇨ “Control Panel” on page 21
- ⇨ “Terminal Panel” on page 22
- ⇨ “Wireless Remote Control” on page 24

Control Panel

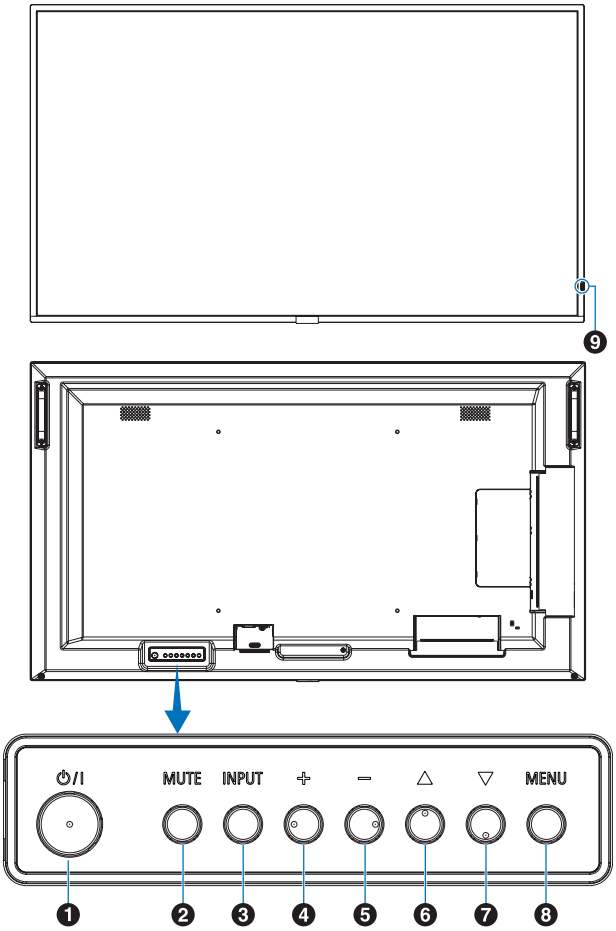

❶ ⏻ Button (power button)

Switches between power on and standby. See page 34.

❷ MUTE Button

Mutes the monitor's audio and video output.
Press it again to unmute the monitor's audio and video output. See "MUTE SETTING*1" on page 90 for details.

❸ INPUT/SET Button

INPUT: Cycles through the available inputs when the OSD menu is closed.

[DisplayPort], [HDMI1], [HDMI2], [Media Player], [OPTION]*1, [COMPUTE MODULE]*2. These are available inputs only, shown as their factory preset name.

SET: Acts as a set button when making a selection when the OSD menu is open.

*1: This function depends on which Option Board is installed in the monitor.

*2: This input is available when the optional Raspberry Pi Compute Module Interface Board and Raspberry Pi Compute Module are installed. See page 73.

❹ + Button (plus button)

Increases the audio output level when the OSD menu is closed.

Acts to move the highlighted area to the right when navigating through the OSD menu options.

Acts as a plus button to increase the adjustment of an OSD menu option after it has been selected with the INPUT/SET button.

❺ – Button (minus button)

Decreases the audio output level when the OSD menu is closed.

Acts to move the highlighted area to the left when navigating through the OSD menu options.

Acts as a minus button to decrease the adjustment of an OSD menu option after it has been selected with the INPUT/SET button.

❻ △ Button (up button)

Opens the OSD menu when the OSD menu is closed.

Acts as up button to move the highlighted area up to select adjustment items within the OSD menu.

❼ ▽ Button (down button)

Opens the OSD menu when the OSD menu is closed.

Acts as down button to move the highlighted area down to select adjustment items within the OSD menu.

❽ MENU/EXIT Button

Opens the OSD menu when the OSD menu is closed.

Acts as a back button within the OSD menu to move to the previous OSD menu.

Acts as an exit button to close the OSD menu when on the main menu.

❾ Remote Control Sensor and Power Indicator

Receives the signal from the remote control (when using the wireless remote control). See page 35.

Glows blue when the monitor is in active mode*1.

Green and Amber blink alternately when the [SCHEDULE INFORMATION] function is enabled*1.

When a component failure is detected within the monitor, the indicator will blink red or blink a combination of red and blue.

Please refer to the Power ON and OFF Modes table on page 34.

*1: If [OFF] is selected in the [POWER INDICATOR] the LED will not glow when the monitor is in active mode. See page 90.

Terminal Panel

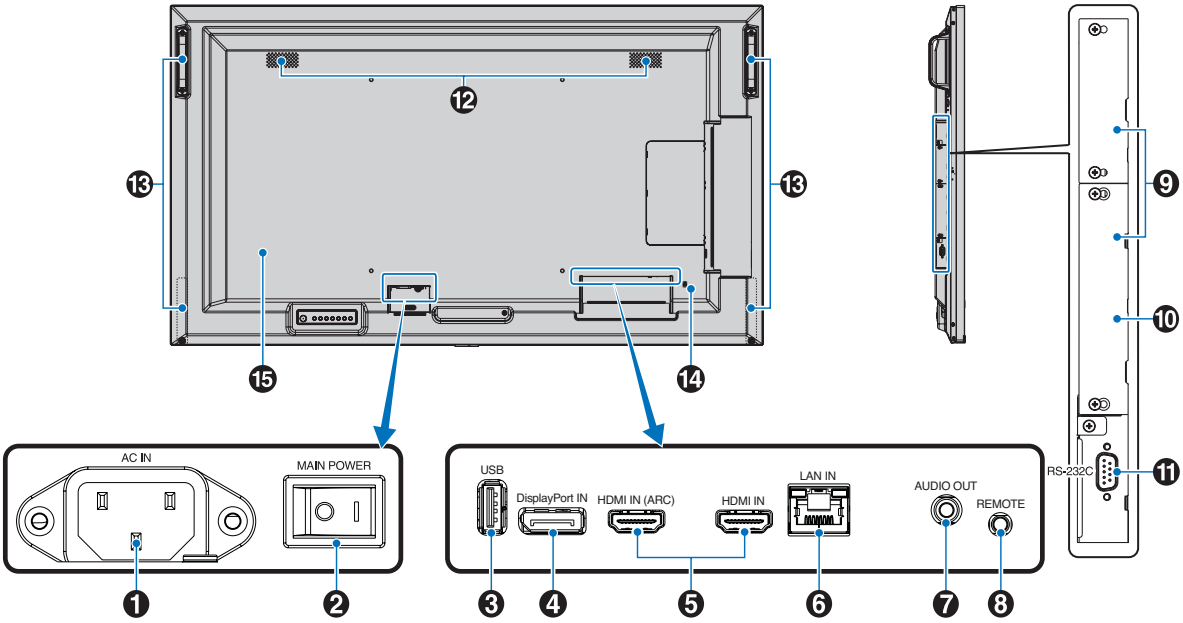

❶ AC IN Connector

Connects with the supplied power cord.

❷ Main Power Switch

On/Off switch to turn main power ON/OFF.

❸ USB Port

USB storage device reader for use with the Media Player.

Power supply for USB devices.

For the USB port information, please see "Using the USB Port" on page 32.

❹ DisplayPort IN

DisplayPort signals input.

❺ HDMI IN (HDMI1 (ARC)/HDMI2)

HDMI signals input.

NOTE:
- HDMI1 terminal also supports ARC (Audio Return Channel) for audio output.
- ARC sends the monitor's sound to audio equipment with an HDMI1 ARC connector.
- Use the included ARC-supported HDMI cable. The audio equipment will output the monitor's audio.
- The audio equipment can be controlled with the included remote control.

❻ LAN Port IN (RJ-45)

Connect to LAN in order to manage and control the monitor over the network. See page 53.

❼ AUDIO OUT

Audio signal output from DisplayPort and HDMI to an external device (stereo receiver, amplifier, etc.).

NOTE: This connector is not a headphone terminal.

❽ REMOTE

Use the optional sensor unit by connecting it to your monitor.

NOTE:
- Do not use this connector unless specified.
- When the optional sensor unit is connected, the monitor's remote control sensor is disabled.

❾ Option Board Slot

Slot for installation of an Intel® Smart Display Module (Intel® SDM).

NOTE: Please contact your supplier for a list of compatible Option Boards.

❿ Raspberry Pi Compute Module Slot

Slot for installing a Raspberry Pi Compute Module Interface Board and Raspberry Pi Compute Module. See page 73.

NOTE: Installation must be performed by a qualified technician. Do not attempt to install a Compute Module Interface Board and Raspberry Pi Compute Module by yourself.

⓫ RS-232C IN (D-Sub 9-pin)

Connect RS-232C input from external equipment, such as a computer, in order to control RS-232C functions. See page 52.

⓬ Internal Speaker

⓭ Handle

Two for M431-2, M501-2, and M551-2.
Four for M651-2.

⓮ Security Slot

Security and theft protection lock slot compatible with Kensington security cables/equipment.

NOTE: For products, visit Kensington's website.

⓯ Label

Wireless Remote Control

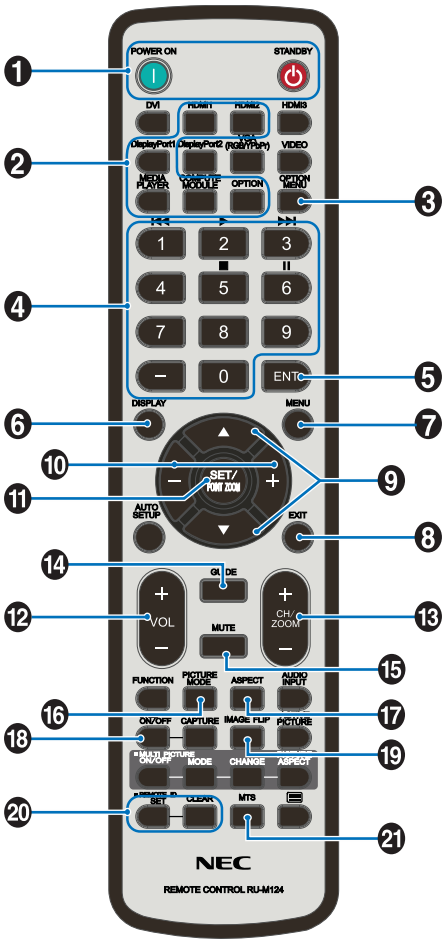

NOTE:
- The buttons with no explanation are not used with your monitor model.
- Some buttons are used for CEC (Consumer Electronics Control) and the Media Player function (“Using the Media Player Menu” on page 40). The CEC buttons are different based on whether the current CEC setting is [MODE1] or [MODE2]. Please see page 77.

❶ POWER ON and STANDBY Buttons

POWER ON resumes full power from low power mode.

STANDBY puts the monitor in low power mode.
See page 34.

❷ INPUT Button

Cycles through the available inputs. See page 31.

These are available inputs only, shown as their factory preset name.

❸ OPTION MENU Button

For use when an Option Board is installed. See page 22.

The function depends on which Option Board is installed in the monitor.

❹ KEYPAD

Press the buttons to set and change passwords, change the channel and set the REMOTE ID. See page 50.

❺ ENT Button

Makes selections in the Media Player settings.
See page 40.

❻ DISPLAY Button

Shows/Hides the information OSD. See page 38.

Unlocks the remote control’s buttons if they have been locked in the [LOCK SETTINGS] in the [PROTECT] menu. Press and hold the DISPLAY button for more than five seconds to unlock the remote. See page 48.

❼ MENU Button

Opens and closes the OSD menu. See page 38.

❽ EXIT Button

Acts as a back button within the OSD to move to the previous OSD menu.

Acts as an EXIT button to close the OSD menu when on the main menu.

❾ ▲/▼ Button (up/down button)

Acts as navigation buttons, within the OSD and Media Player menus, to move the highlighted area up or down.

❿ –/+ Button (minus/plus button)

Acts as navigation buttons, within the OSD and Media Player menus, to move the highlighted area left or right.

Increases or decreases the adjustment level within the selected OSD menu setting.

⓫ SET/POINT ZOOM Button

SET: When the OSD menu is open, this button acts as a set button when you make a selection.

⓬ VOLUME +/– Button

Increases or decreases the audio output level.

⓭ CH/ZOOM +/– Button*

For use with an Option Board. The function depends on which Option Board is installed in the monitor.

⓮ GUIDE Button

For use with an Option Board. The function depends on which Option Board is installed in the monitor.

⓯ MUTE Button

Mutes the monitor's audio and video output.
Press it again to unmute the monitor's audio and video output. See "MUTE SETTING*1" on page 90 for details.

⓰ PICTURE MODE Button

Cycles through the picture modes [NATIVE], [RETAIL], [CONFERENCING], [HIGHBRIGHT], [TRANSPORTATION] and [CUSTOM]. See page 36.

⓱ ASPECT Button

Cycles through the picture aspect ratios [FULL], [WIDE], [1:1], [ZOOM] and [NORMAL]. See page 37.

NOTE: [Media Player] is not available.

⓲ STILL Button

ON/OFF button: Activates/deactivates still picture mode.

⓳ IMAGE FLIP Button

Changes the orientation of the image. See page 81.

⓴ REMOTE ID Button

Activates the REMOTE ID function. See page 50.

㉑ MTS Button

For use with an Option Board. The function depends on which Option Board is installed in the monitor.

Chapter 3 Connections

This Chapter Includes:

⇨ “Wiring Diagram” on page 27

⇨ “Connecting to a Personal Computer” on page 28

⇨ “Connecting to a Computer with HDMI” on page 28

⇨ “Connecting a Computer with DisplayPort” on page 28

⇨ “Connecting to a Media Device with HDMI” on page 29

⇨ “Connecting to audio equipment with ARC function” on page 29

⇨ “HDMI-CEC (Consumer Electronics Control)” on page 29

⇨ “HDMI-CEC Command” on page 30

⇨ “Internal Video Sources” on page 31

⇨ “Media Player” on page 31

⇨ “Option Board for the Monitor” on page 31

⇨ “Using the USB Port” on page 32

Connecting External Equipment

NOTE:
- Do not connect or disconnect cables when turning on the monitor’s main power or other external equipment’s power as this may result in loss of image.
- Do not use an attenuating (built-in resistor) audio cable. Using an audio cable with a built-in resistor will lower the sound level.

Before making connections:

- Turn off the device’s power before connecting it to the monitor.
- Refer to the device’s user manual for available connection types and instructions for the device.
- We recommend turning off the monitor’s main power before connecting or disconnecting a USB storage device to avoid data corruption.

Wiring Diagram

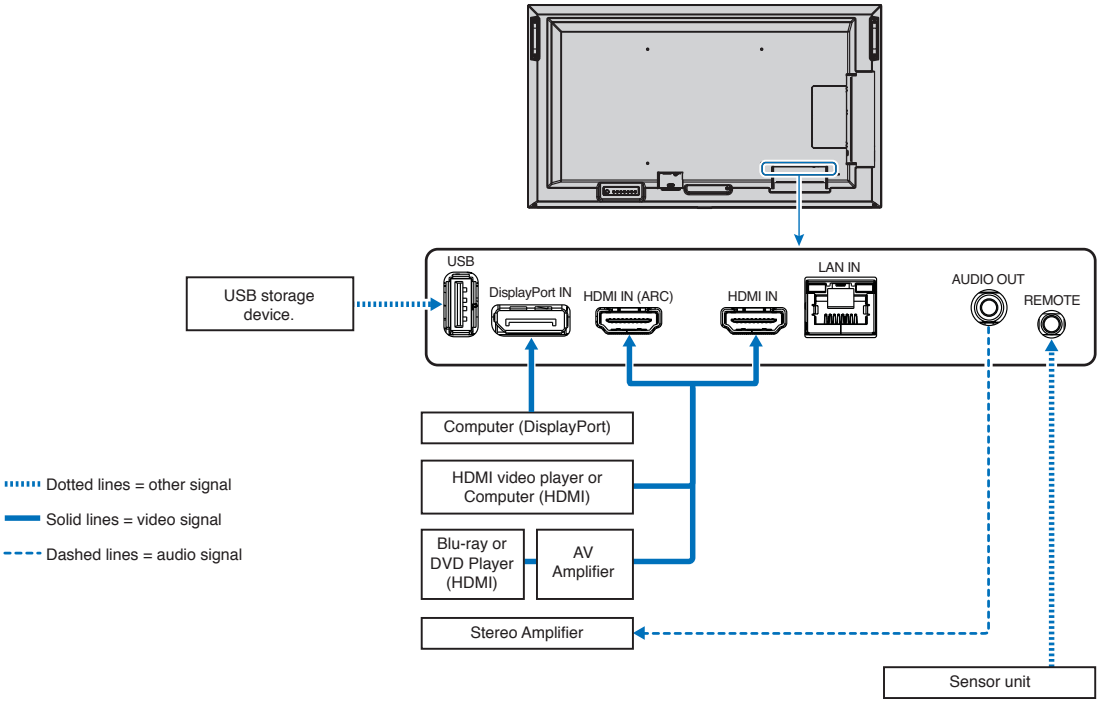

Connecting to a Personal Computer

Connecting to a Computer with HDMI

- Please use an HDMI cable with the HDMI logo.
- It may take a moment for the signal to appear after turning on the computer.
- Some display cards or drivers may not show an image correctly.
- When you use a computer with HDMI, please set [OVERSCAN] to [AUTO] or [OFF] as display drivers may not be fully compatible and may not show an image correctly. See page 77.
- If the source signal is 4K (50 Hz/60 Hz) or HDCP 2.2 or HDR, please set [MODE2] at [HDMI] in [ADVANCED]. See page 77.
- If the monitor's main power is turned on after a connected computer is turned on, sometimes an image is not shown. In this case, please turn off the computer then turn it on again.
- When input signal is 4K, please use high-speed HDMI cable.

Connecting a Computer with DisplayPort

- Please use a DisplayPort cable with the DisplayPort compliance logo.
- It may take a moment for the signal to appear after turning on the computer.
- When connecting a DisplayPort cable to a component with a signal conversion adapter, an image may not appear.
- Some DisplayPort cables feature a locking function. When removing this cable, hold down the top button to release the lock.
- If the monitor's main power is turned on after a connected computer is turned on, sometimes an image is not shown. In this case, please turn off the computer then turn it on again.

Connecting to a Media Device with HDMI

Connect using a single HDMI cable for the highest picture and audio quality from Blu-ray players, streaming media players, or game consoles. 4K UHD content is shown when the connected media player also supports 4K content.

Supports HDCP (High-bandwidth Digital Contents Protection) coding, a type of digital rights management that prevents high-definition content, in Blu-ray discs, DVDs and streaming media, from being copied or broadcast illegally.

NOTE:
- Connect the HDMI cable when both the media player and the monitor are powered off.
- Use an HDMI cable with the HDMI logo.
- Some HDMI cables and devices may not show an image correctly due to different HDMI specifications.
- If you are unable to view material via the digital inputs, this does not necessarily mean that the monitor is not functioning properly. With the implementation of HDCP, there may be cases in which certain content is protected by HDCP and might not be displayed due to the decision/intention of the HDCP community (Digital Content Protection, LLC).

Connecting to audio equipment with ARC function

If connecting audio equipment with ARC function to HDMI1 (ARC) using the included ARC-supported HDMI cable, the audio equipment outputs the monitor's sound.

- The sound via HDMI1 (ARC) is not adjustable by the OSD menu.
- When the ARC function is activated, the monitor's internal speakers are muted.

HDMI-CEC (Consumer Electronics Control)

HDMI-CEC provides compatible media players, connected via HDMI, the ability to communicate and allow limited control between the device and the monitor. For example, turning on a Blu-ray player can immediately switch input to the Blu-ray player without using the remote control. Not all devices are fully compatible, and, in some cases, the media device manufacturer may only provide compatibility with its own monitors or TVs. See "HDMI-CEC Command" on page 30.

When supported, the monitor's remote control can be used to control the HDMI media device.

NOTE: The instructions in this section guide you through configuring [CEC] in the monitor's OSD menu. These settings can also be configured using the monitor's web controls.

Enabling CEC

1. Connect a HDMI-CEC compatible device to the HDMI port.

   Press the HDMI button on the remote control.
2. Press the MENU button to open the OSD menu.
3. Navigate to [ADVANCED] then to [CEC].
4. Select [MODE1] or [MODE2] for [CEC].
5. Select [YES] under [SEARCH DEVICE].

   When the search is complete, the HDMI port with a CEC connected device is shown with its name.

   If no HDMI-CEC compatible device is found, make sure the device is plugged in, turned on, it supports CEC and CEC is enabled. Depending on the manufacturer, the CEC feature may have a different name. Refer the device's product manual.
6. Press the EXIT button on the remote control.

HDMI-CEC Command

Please connect a HDMI-CEC compatible device to HDMI port.

OSD menu	HDMI-CEC command name	Explanation	Setting
CEC (Consumer Electronics Control)	One Touch Play	When a HDMI-CEC compatible device is turned on, the monitor connected to the device by an HDMI cable also automatically turns on. After the monitor powers on, the input terminal switches automatically to the target HDMI. If the monitor is turned on when HDMI-CEC compatible devices are turned on, it changes the [INPUT] from the current one to [HDMI2].	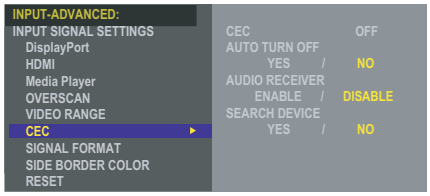 To set the CEC options, please follow the steps below. Press the Menu button to open the OSD. Using the ▲▼ + – buttons, navigate to [INPUT], to [ADVANCED], to [CEC], then press SET/POINT ZOOM button to enter the CEC options. Use the + – buttons to highlight [MODE1] or [MODE2], then press SET/POINT ZOOM button to enable CEC.
	Remote Control Pass Through	The monitor's wireless remote control button operation can function with HDMI-CEC compatible devices. For example, if turning on the monitor by wireless remote control and pressing the play button, a HDMI-CEC compatible device can also be turned on and play.	
	Power Status	Connected HDMI-CEC compatible devices obtain the monitor's power status, such as if the monitor is in standby mode or on.	
	System Information	This function obtains the information for a connected HDMI-CEC compatible device (CEC version, Physical Address). In addition, this function copes with the "Change Language function". If the language for the monitor is changed, the language for a connected HDMI-CEC compatible device is changed to the same language, which is selected for the monitor. For the "Change Language function", it is necessary that the connected HDMI-CEC compatible device be able to cope with multi-language.	
AUTO TURN OFF	System Standby	If the monitor is set to standby using the wireless remote control, HDMI-CEC compatible devices also go into standby at the same time. If the monitor goes into standby while an HDMI-CEC compatible device is recording, the device remains on. Please refer to the user's manual supplied with the HDMI-CEC compatible device for further information.	Use the ▲▼ buttons to select [AUTO TURN OFF]. Use the + – buttons to highlight [YES], then press the SET/POINT ZOOM button to select [YES].
AUDIO RECEIVER	System Audio Control	Please connect an audio equipment with ARC function to HDMI1 (ARC) by the included ARC supported HDMI cable. The Volume button on the wireless remote control can control the volume of the connected HDMI ARC audio equipment. While this function is active, the monitor's internal speaker is automatically set to MUTE.	Use the ▲▼ buttons to select [AUDIO RECEIVER] then press SET/POINT ZOOM. Use the + – buttons to highlight [ENABLE], then press the SET/POINT ZOOM button to select [ENABLE].
SEARCH DEVICE	Device OSD Name Transfer	Use the + – buttons to highlight YES, then press the SET/POINT ZOOM button to start the search.	Use the ▲▼ buttons to select [SEARCH DEVICE].
	Routing Control	By selecting a device name, the HDMI-CEC compatible device input switches to the input you selected. After selecting the device, wireless remote control operation functions for the selected device.	This function searches for CEC compatible devices on the monitor's HDMI connections. If a HDMI-CEC compatible device is successfully detected, this function obtains the device's name. The device's name and the HDMI connection it is found on are displayed.
This CEC function supports Feature Abort. Please refer to Connections (see page 26) for HDMI-CEC compatible device connection.			

Internal Video Sources

Media Player

The internal Media Player will play audio and video files that are stored on a USB storage device. See page 40 for instructions on using the Media Player.

Connect compatible USB storage device

Format a USB storage device in the NTFS format, FAT32 format, or FAT16 format to use it with the Media Player. Refer to the computer's instruction user's manual or Help file on how to format a USB storage device.

Please use a USB storage device with this monitor in accordance with the drawing below.

If the physical size of the USB storage device is larger than the supported size listed below, please use a USB extension cable.

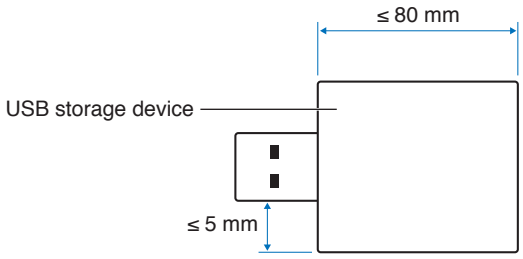

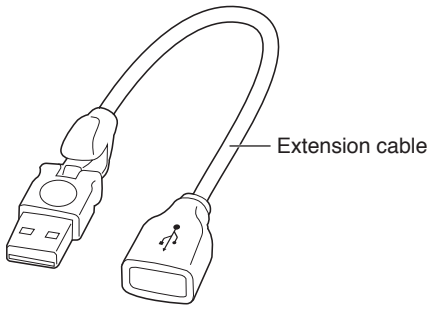

NOTE:
- If the monitor does not recognize a connected USB storage device, make sure the file structure is NTFS, FAT32, or FAT16.
- The monitor is not guaranteed to work with all USB storage devices sold commercially.
- Insert the USB storage device into the USB port on the monitor's side terminal panel.
- The Media Player does not use any other USB connection on the monitor (see page 22).

Option Board for the Monitor

When an Option Board or a Raspberry Pi Compute Module Interface Board and Raspberry Pi Compute Module are installed in the monitor, it will show as available in the list in the [INPUT] of the OSD menu. Option Boards, the Raspberry Pi Compute Module Interface Board and Raspberry Pi Compute Module are available separately and must be physically installed in the monitor. This document contains instructions for how to use the monitor without any additional options. The locations where an Option Board and the Raspberry Pi Compute Module Interface Board are installed is indicated on the Terminal Panel diagram (see page 22). Full installation and usage instructions are provided with the individual device or available online.

NOTE:
- The optional DS1-IF20CE Compute Module Interface Board and Raspberry Pi Compute Module are available separately. Please contact an authorized dealer for more information. Installation must be performed by a qualified technician. Do not attempt to install a Compute Module Interface Board and Raspberry Pi Compute Module by yourself. See page 73.
- Please contact your supplier for available Option Boards.

Using the USB Port

- USB storage device reader for use with the internal Media Player. See page 40.
- Power supply port.
- Updates the monitor firmware via a USB storage device.
- Imports or exports the monitor settings via the USB storage device when selecting [CLONE SETTING].

NOTE:
- Please make sure the connector shape and orientation is correctly aligned when connecting the USB device or cable.
- Connecting/disconnecting a USB storage device with the monitor already powered on is not recommended.
  To prevent damage to the monitor and possible corruption of the connected device's data files, the monitor's main power switch should be off before making connections or disconnections.

Chapter 4 Basic Operation

This Chapter Includes:

- ⇨ “Power ON and OFF Modes” on page 34
- ⇨ “Operating Range for the Remote Control” on page 35
- ⇨ “Using Power Management” on page 35
- ⇨ “Showing the Information OSD” on page 36
- ⇨ “Switching Between Picture Modes” on page 36
- ⇨ “Setting the Aspect Ratio” on page 37
- ⇨ “OSD (On-Screen Display) Controls” on page 38
- ⇨ “Using the Media Player Menu” on page 40
- ⇨ “Media Player Menu” on page 40

Power ON and OFF Modes

Press the ⏻ button on the Control Panel or POWER ON button on the remote control to turn on the monitor.

The monitor's power LED indicates the current status of the monitor. Please refer to the following table for information about the power indicator.

Power indicator status and lighting pattern	Condition	Recovery
Glowing blue	Normal	1. Turn on the monitor using the remote control or the monitor button. 2. Send an AV signal input to the monitor.
Blinking green*1	Under any of the conditions below, no input signal has been detected by the monitor during the period of time you set: • The monitor is using an Option Board*2. • [AUTO INPUT CHANGE] is set to a setting except for [NONE]. • [USB POWER] is set to [ON]. • [SLOT POWER] is set to [ON]. • [QUICK START] is set to [ENABLE].	
Glowing amber	No AV signal input has been detected by the monitor during the period of time you set. (with network signal input)	1. Turn on the monitor using the remote control or the monitor button. 2. Send an AV signal input to the monitor.*3 3. Disconnect and reconnect a signal cable.
Blinking amber	No AV signal input has been detected by the monitor during the period of time you set. (no network signal input)	
Glowing red	Turn off the monitor by the remote control or the monitor button.	Turn on the monitor using the remote control or the monitor button.

*1: Time setting for auto power save is available at [POWER SAVE SETTINGS] (See page 86).
*2: [SLOT POWER] is set to [ON] or [AUTO].
*3: [MODE] in [POWER SAVE SETTINGS] is set to [NORMAL].

NOTE:
- The blue power indicator that the monitor is powered on and functioning normally can be turned off in the monitor's OSD menu options. See page 90.
- If the indicator is blinking red in a combination of long and short durations, a certain failure might have occurred, please contact your supplier.

The Main Power switch must be in the ON position in order to power up the monitor using the POWER ON button on the remote control or the ⏻ button on the Control Panel.

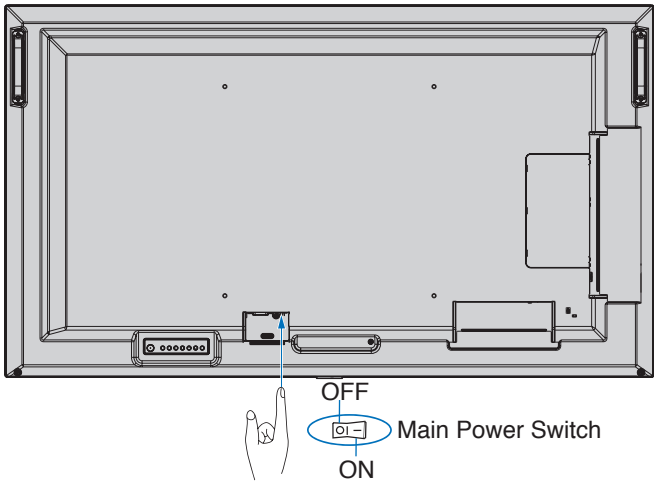

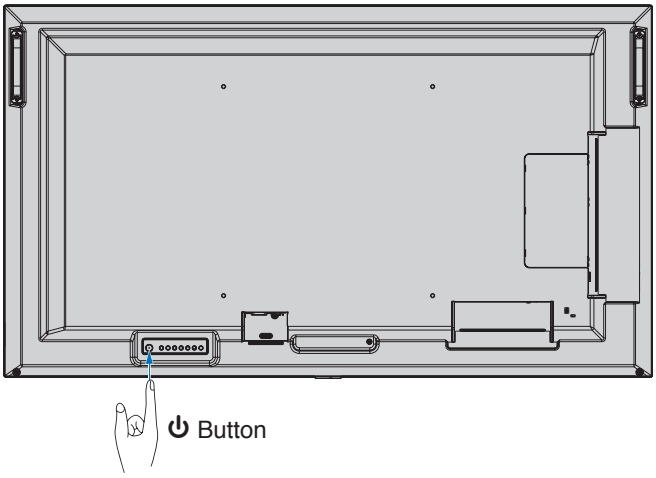

Operating Range for the Remote Control

Point the top of the remote control toward the monitor's remote control sensor during button operation.

Use the remote control within a distance of about 7 m (23 ft.) from the remote control sensor, or at a horizontal and vertical angle of within 30° and within a distance of about 3.5 m (10 ft.).

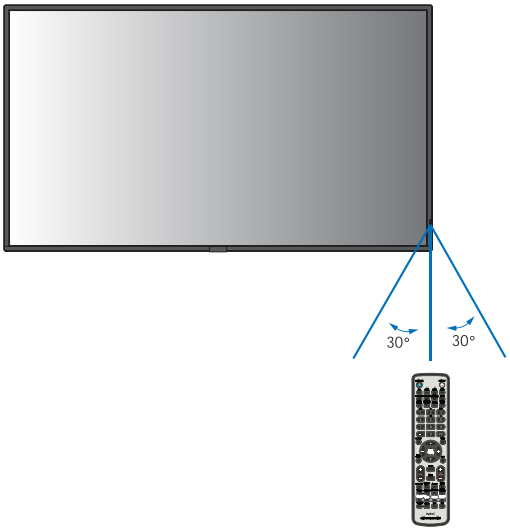

NOTE: The remote control system may not function when direct sunlight or strong illumination strikes the remote control sensor, or when there is an object in the path.

Handling the remote control

- Do not expose to strong shock.
- Do not allow water or other liquid to splash on the remote control. If the remote control gets wet, wipe it dry immediately.
- Avoid exposure to heat and steam.
- Except to install the batteries, do not open the remote control.

Using Power Management

This function decreases the power consumption of the monitor when it is not in use.

When connected to a computer, power consumption by the monitor reduces automatically if the keyboard or mouse are not used during the time set in the computer's power management settings. Refer to your computer's user manual for more information.

When connected to an AV source, such as a Blu-ray, DVD, or streaming video player, power consumption by the monitor reduces automatically after a certain amount of time has passed since the monitor recognized "no signal input". This option is set to [ENABLE] or [DISABLE] in the [POWER SAVE] settings under the [POWER SAVE SETTINGS] menu of the OSD. See page 86.

NOTE:
- Depending on the computer and display card used, this function may not operate.
- After the video signal is lost, the monitor automatically turns off after a preset time period. Please refer to the [TIME SETTING] in [POWER SAVE] page 86.
- Schedules can be created for the monitor to power on or standby at specific times. See page 44.
- Please refer to the [POWER SAVE] in [POWER SAVE SETTINGS] for the power management function.

Showing the Information OSD

The Information OSD provides information such as: Input Source, etc.

Press the DISPLAY button on the remote control to bring up the Information OSD.

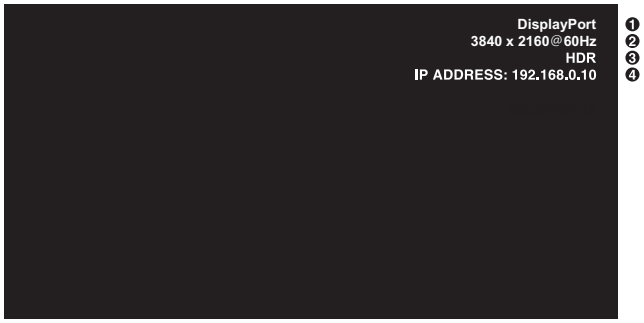

❶ Input name

❷ Input Signal Information

❸ HDR Information

❹ Communication Info*

* Shows when [COMMUNICATION INFO] is [ON].
Green: Connected LAN
Red: Not connected LAN

NOTE: When the input signal is [Media Player], the information OSD will not be displayed.

Switching Between Picture Modes

Press the PICTURE MODE button on the wireless remote control to cycle through the picture modes [NATIVE], [RETAIL], [CONFERENCING], [HIGHBRIGHT], [TRANSPORTATION] and [CUSTOM].

The picture modes are pre-configured with settings for general use. See “Using Picture Modes” on page 45 for instructions on changing the picture mode settings.

Setting the Aspect Ratio

Press the ASPECT button on the remote control to cycle through the options available for the current input signal.

NOTE: [Media Player] is not available.

[FULL] ➔ [WIDE] ➔ [1:1] ➔ [ZOOM] ➔ [NORMAL]

Aspect ratio of image	Unchanged view*2	Recommended selection for picture aspect*2		Description
4:3	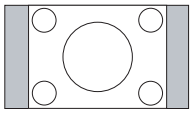	[NORMAL]	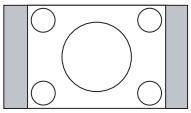	Reproduces the aspect ratio that is sent from the source.
Squeeze	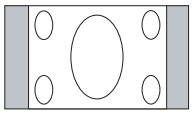	[FULL]	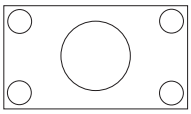	Fills the entire screen.
Letterbox	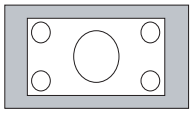	[WIDE]	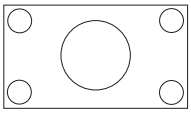	Expands a 16:9 letter box signal to fill the entire screen.

*2: Gray areas indicate unused portions of the screen.

[1:1]: Shows the image in a 1 by 1 pixel format.

[ZOOM]

- The zoom function increases the image size, which expands the image beyond the active screen area. The parts of the image outside the active screen area are not shown.

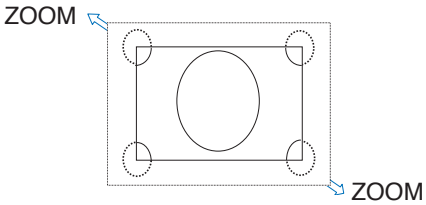

OSD (On-Screen Display) Controls

NOTE: Some functions may not be available depending on the model or optional equipment.

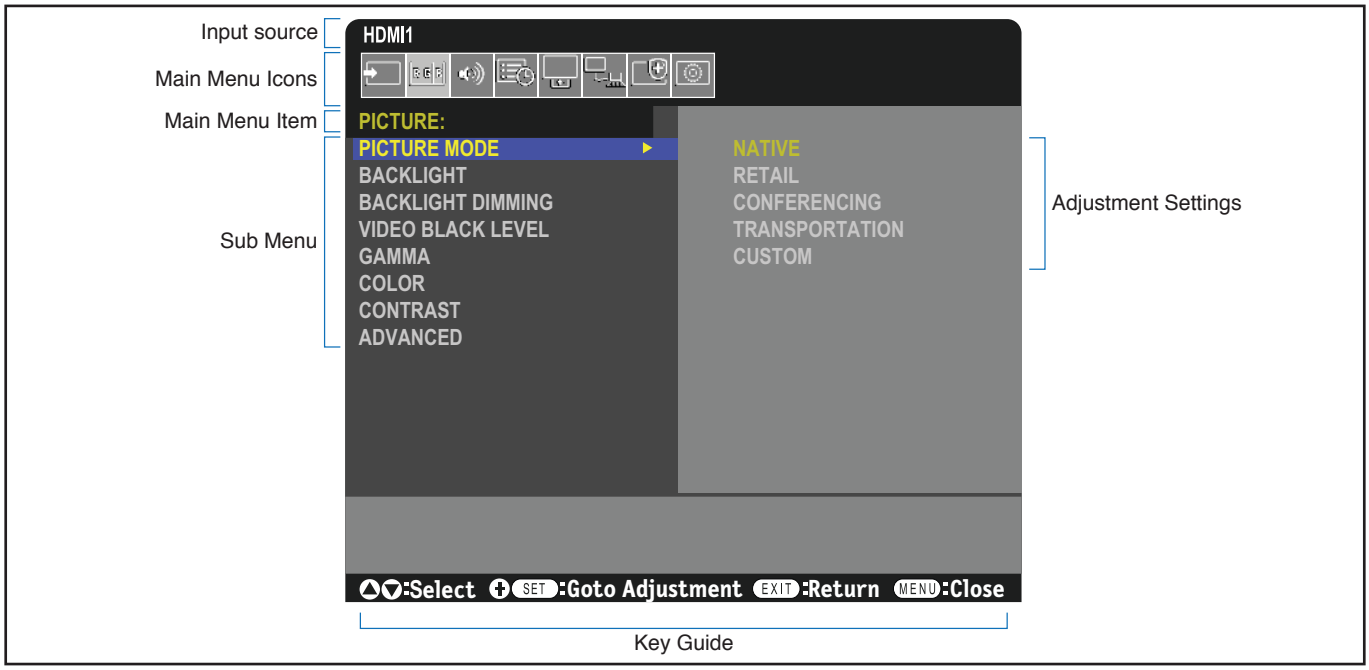

Press ▲ or ▼ to navigate to a sub-menu.

Press SET/POINT ZOOM to select.

Press ▲ or ▼, + or – to select the function or setting to be adjusted.

Press MENU or EXIT to open and close the OSD menu.
EXIT button acts as a back button within the OSD.

Remote Control

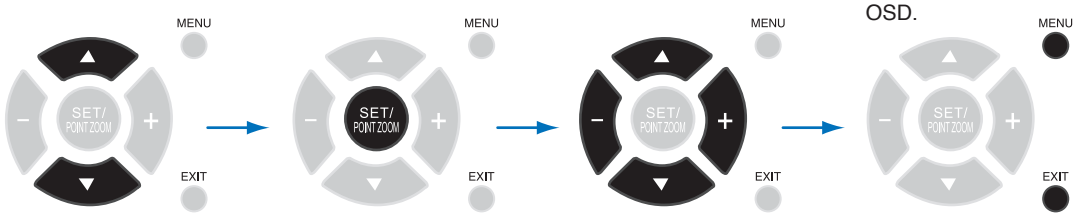

Control Panel

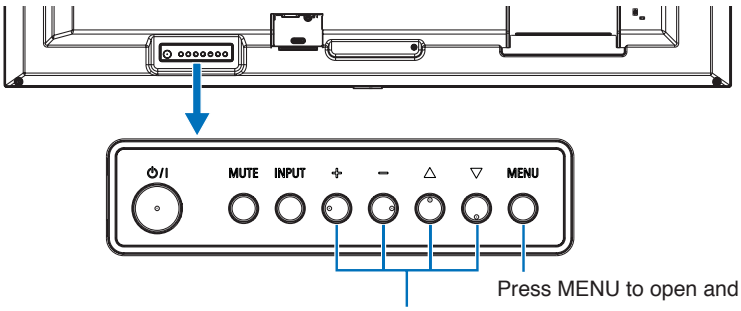

Press MENU to open and close the OSD menu.

Press + or –, △ or ▽ to select the function or setting to be adjusted.

Below is a brief summary of where controls are under each menu item. A table listing all options is located in “OSD Controls List” on page 75.

	INPUT: Select settings related to the input signal source. Configure the Media Player settings.
	PICTURE: Select one of the default picture modes, manually adjust the color settings, adjust the aspect ratio, and adjust other settings related to the picture.
	AUDIO: Adjust volume, balance, equalizer, and select settings related to the audio.
	SCHEDULE: Create auto power on/off schedules and set the off timer.
	SLOT: Select settings related to an Option Board if installed.
	NETWORK: Set network information, security, etc.
	PROTECT: Select options related to protecting the monitor hardware, such as configuring the cooling fans, adjusting automatic power save and power on delay, and enabling the alert mail to be notified when an error occurs in the monitor.
	SYSTEM: View the monitor information, set the date and time and the daylight savings time, select the languages of the on-screen display menu, or perform a factory reset.

Using the Media Player Menu

The Media Player plays image, video, and music files located on a USB storage device connected the USB port on the monitor (see page 22).

To open the Media Player menu, press the MENU button on the remote control and select [Media Player] with [INPUT SELECT] in the OSD menu.

NOTE:
- The USB storage device containing the files must be connected to the USB port on the monitor.
- The Media Player does not auto-rotate content when changing the monitor's orientation from landscape to portrait and vice versa. Content must be created in the same orientation that matches the installed orientation of the monitor to display correctly.
- The Media Player menu is always shown in the landscape orientation.

Media Player Menu

Shows image, music, or video files stored in the USB storage device.

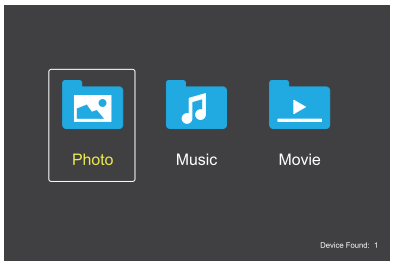

Select the type of file you want to play between movie, music, and photo.

Selecting Files to Play

- Playing a file.

  Navigate to a file using the ▲, ▼, –, + buttons on the remote control, and then press the ▶ button.
- Playing multiple files.
  1. Navigate to a file using the ▲, ▼, –, + buttons on the remote control.
  2. Press the SET/POINT ZOOM button to add a checkmark next to each file.
  3. This saves the files as a playlist in the USB storage device.

  NOTE:
  - The files play in the sorted order.
  - File names must contain only alphanumeric characters.

Operation Buttons

- Press the SET/POINT ZOOM button while playing a file to display the operation menu on the screen.
- Press –, + buttons to highlight an item in the operation menu and then press the SET/POINT ZOOM button.
- Press the EXIT or the ▼ button on the remote control to close the operation menu.

Slideshow Operation

- Navigate to files using the ▲, ▼, –, + buttons and press the ▶ button to start a slideshow.
  Press the ❙❙ button to pause the slideshow.
- To pause the slideshow using the on-screen operation menu, select Pause.
  Select Play to resume the slideshow.
- Select Prev or press the ⏮ button to return to the previous image.
- Select Next or press the ⏭ button to go to the next image.
- Select Stop or press the ■ button to stop the slideshow.

Repeat Play

The following modes are available to loop files for repeat play.

RepeatNone - Repeat off

- No selected files.
  - All files in the folder are played once, in the sorted order.
- One or more selected files.
  - Any files you checked are played once, in the sorted order.

Repeat 1 - Repeat one file

- No selected files.
  - A file is playing: the current file plays on a loop.
  - No file is playing: the highlighted file in the folder plays on a loop.
- One or more selected files.
  - The highlight is on a checked file: the highlighted file plays on a loop.
  - The highlight is not on a checked file: the first checked file in the sorted order plays on a loop.

RepeatALL - Repeat all files

- No selected files.
  - All files in the folder are played on a loop, in the sorted order.
- One or more selected files.
  - The selected files are played on a loop, in the sorted order.

Random Play

- Random Play

- Shuffles files to repeat play in a random order instead of the file sorted order.

Other Functions

- Select to view the playlist of files.
  You can also select the files to play from the list.
- While a file is being played, select to show information on the file being played.
- Select or to rotate an image being displayed.

Zoom Function

- Select or to switch the image size.
  8, **4**, **2**, **1**, **1/2**, **1/4**.
- Select to scroll the enlarged image.

Slide Show

- Set the amount of time to show the image.
  Short: 5 sec.
  Medium: 10 sec.
  Long: 15 sec.

Video and Music Operations

- Select files using the ▲, ▼, –, + buttons and press the ▶ button to start the playback.
  Press the ❚❚ button to pause the playback.
- To pause the playback using the on-screen operation menu, select .
  Select to resume the playback.
- Select to start fast forward.
  FF2X, **FF4X**, **FF8X**, **FF16X**, **FF32X**
  (The sound is not output).
- Select to start fast backward.
  FF2X, **FF4X**, **FF8X**, **FF16X**, **FF32X**
  (The sound is not output).
- Select or press the ⏮ button to return to the previous file.
- Select or press the ⏭ button to go to the next file.
- Select or press the ■ button to stop the playback.

Repeat Play

The following modes are available to loop files for repeat play.

- Repeat off

- No selected files.
  - All files in the folder are played once, in the sorted order.
- One or more selected files.
  - Any files you checked are played once, in the sorted order.

- Repeat one file

- No selected files.
  - A file is playing: the current file plays on a loop.
  - No file is playing: the highlighted file in the folder plays on a loop.
- One or more selected files.
  - The highlight is on a checked file: the highlighted file plays on a loop.
  - The highlight is not on a checked file: the first checked file in the sorted order plays on a loop.

- Repeat all files

- No selected files.
  - All files in the folder are played on a loop, in the sorted order.
- One or more selected files.
  - The selected files are played on a loop, in the sorted order.

(Only for video)

- Plays a section of a video in a loop.
  Set the start point with and the stop point with .
  Select to stop the loop playing.

Random Play

- Random Play

- Shuffles files to repeat play in a random order instead of the file sorted order.

Other Functions

- Select to view the playlist of files.
  You can also select the files to play from the list.
- While a file is being played, select to show information on the file being played.

NOTE:
- When turning off the power or exiting the Media Player menu, the playlist selection will reset. When you next use the Media Player, you will need to select the playlist's file again.
- To play files automatically when turning on the power, select the content to play in [Media Player] under [INPUT SIGNAL SETTINGS] (see page 77).
- Only use USB mass storage class device types. There is no support for any other kind of USB device.
- We cannot guarantee to support all commercially available USB mass storage devices.
- Do not use a USB hub.
- Do not use a multi-partition USB storage device.
- Supports power USB Type-A connector (DC 5 V, max. 2 A). For USB devices over 2 A, use an external AC power adaptor.
- NTFS (New Technology File System) is the recommended file system for the USB storage device.
- When connecting the monitor to a computer, with a USB device formatted as FAT16 or FAT32, a message prompting you to the scan the USB device may appear. If that occurs, scan the USB device.

USB Drive Data and File Format Requirements

Supported file system	FAT16/32, NTFS		
Max. folder level	9		
Max. number of photos	997		
PHOTO mode			
File Extension	**Data format**	**Min. Resolution (HxV) of Image**	**Max. Resolution (HxV) of Image**
JPEG, JPG, JPE	Baseline Sequential DCT	75x75 pixels	15,360x8,640 pixels
MUSIC mode			
File Extension	**Data format**	**Max. Bit rate**	**Max. Channel No.**
MP3	MPEG1/2 Layer3 (MP3)	320 Kbps	2ch
MOVIE mode			
Container format	**Supported Video codec**		**Supported Audio codec**
MPG, MPEG	MPEG1, MPEG2, MPEG4		LPCM, MP3, AAC
TS	MPEG2, H.264, HEVC/H.265		LPCM, MP3, AAC
MP4	MPEG2, MPEG4, H.263, H.264, HEVC/H.265		LPCM, MP3, AAC
WMV	H.264, Windows Media Video 9		WMA 9, WMA 10 Pro
Video codec	**Max. Bit rate of Video*2**	**Max. Resolution (HxV) of Video**	
MPEG1	40 Mbps	1920x1080@30 Hz	
MPEG2	40 Mbps	1920x1080@30 Hz	
MPEG4	40 Mbps	1920x1080@30 Hz	
H.263	40 Mbps	1920x1080@30 Hz	
H.264	135 Mbps	3840x2160@60 Hz	
HEVC/H.265	100 Mbps	3840x2160@60 Hz	
Windows Media Video 9 (WMV3)	40 Mbps	1920x1080@30 Hz	
Audio codec	**Max. Bit rate of Audio*2**	**Max. Channel No.**	
LPCM	1.5 Mbps	5.1ch*1	
MPEG1/2 Layer3 (MP3)	320 Kbps	2ch	
AAC	AAC-LC: 576 Kbps HE-AAC v1: 288 Kbps HE-AAC v2: 144 Kbps	5.1ch*1	
WMA 9 Standard	320 Kbps	2ch	
WMA 10 Pro M0	192 Kbps	2ch	
WMA 10 Pro M1	384 Kbps	5.1ch*1	
WMA 10 Pro M2	768 Kbps	5.1ch*1	

*1: It is played with down-converted to 2ch.

*2: It may not play smoothly at combination of Max bit rate of Video and Audio.

NOTE: • Sometimes, it may not be possible to play a video file even when the conditions above are met.
The file may not be played properly depending on the bit rate.
Video files made with a codec not supported by the monitor cannot be played.

Chapter 5 Advanced Operation

This Chapter Includes:

- ⇨ “Creating a Power Schedule” on page 44
- ⇨ “Using Picture Modes” on page 45
- ⇨ “Setting Security and Locking the Monitor Controls” on page 46
- ⇨ “Password Security” on page 46
- ⇨ “Locking the Button Controls” on page 48
- ⇨ “Setting the Remote Control ID Function” on page 50

Creating a Power Schedule

The schedule function allows the monitor to automatically change between power on and standby modes at different times.

To program the schedule:

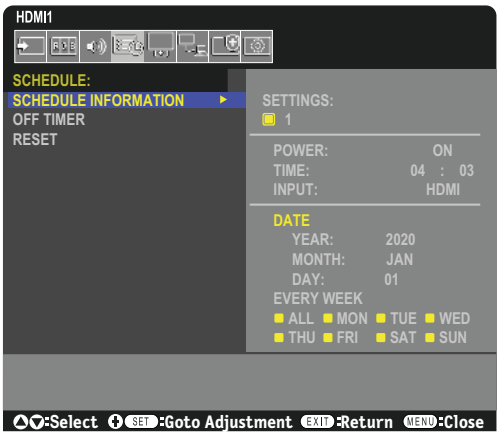

1. Enter the [SCHEDULE] menu.

   ① Using the remote control, highlight [SCHEDULE INFORMATION] using the ▲ and ▼ buttons.

   ② Press the SET/POINT ZOOM or the **+** button to enter the Settings menu.

   ③ Highlight the desired schedule number and press SET/POINT ZOOM button.

   ④ The box next to the number will turn yellow.
   The schedule can now be programmed.

2. Use the ▼ button to highlight the [POWER]. Use the **+** and **–** buttons to set [ON].

   To set a power off schedule, set [OFF].

3. Use the ▼ button to highlight the [TIME]. Use the **+** and **–** buttons to set the time.

4. Use the ▲ and ▼ buttons to highlight [INPUT]. Use the **+** and **–** buttons to choose the input source.

5. Use the ▼ button to select [DATE] or [EVERY WEEK]. Press the SET/POINT ZOOM button on a menu which is suitable for the schedule.

   If the schedule is to be run on a specific day, choose [DATE] and press the SET/POINT ZOOM button.

   If a weekly schedule is desired, choose the [EVERY WEEK] using the ▲ and ▼ buttons and pressing SET/POINT ZOOM button to select. Then select the specific day and press SET/POINT ZOOM button.

6. After a schedule is programmed, the remaining schedules can then be set. Press MENU button to leave the OSD or press EXIT button to go back to the previous menu.

NOTE: • If schedules are overlapping, the schedule with the highest number will have priority over the schedule with the lowest number. For example, schedule #7 will have priority over schedule #1.

Using Picture Modes

There are different picture modes available. These picture modes have also been configured with settings as described in the "Picture Mode Types" table below.

To change picture modes:

Press the PICTURE MODE button on the wireless remote control to cycle through the modes, or select the mode in the [PICTURE] list in the OSD menu.

These picture modes are available based on the selected input:

- For [DisplayPort], [HDMI1], [HDMI2], [Media Player], [COMPUTE MODULE]*1, [OPTION]

  NATIVE → RETAIL → CONFERENCING → HIGHBRIGHT → TRANSPORTATION → CUSTOM

  *1: This input is available when the optional Raspberry Pi Compute Module Interface Board and Raspberry Pi Compute Module are installed. See page 73.

Picture Mode Types

PICTURE MODE	PURPOSE
NATIVE	Standard setting.
RETAIL	Bright, vivid colors ideal for advertising and branding.
CONFERENCING	Lower color temperature and optimized for natural human complexions.
HIGHBRIGHT	Maximum backlight brightness with higher color temperature for brighter ambient environments.
TRANSPORTATION	Maximum backlight brightness with high contrast to read text under all conditions.
CUSTOM	Customizable settings.

NOTE: Changing any of the settings of the [PICTURE] in the OSD menu will change the settings for the current input only.

Setting Security and Locking the Monitor Controls

Under normal operation, the monitor can be controlled by any person using the remote control or the monitor control panel. You can prevent unauthorized use and changes to the monitor settings by enabling the options for Security and Lock Settings.

The security and locking functions covered in this section are:

- Setting the password
- Enabling password security
- Locking the remote control buttons
- Locking the monitor control panel buttons

Settings Location

The instructions in this section guide you through configuring security and locking functions in the monitor's OSD menu. These settings can also be configured using the monitor's web controls. See page 55.

The menu options for Security and Lock Settings are in the [PROTECT] menu in both the OSD menu and web controls.

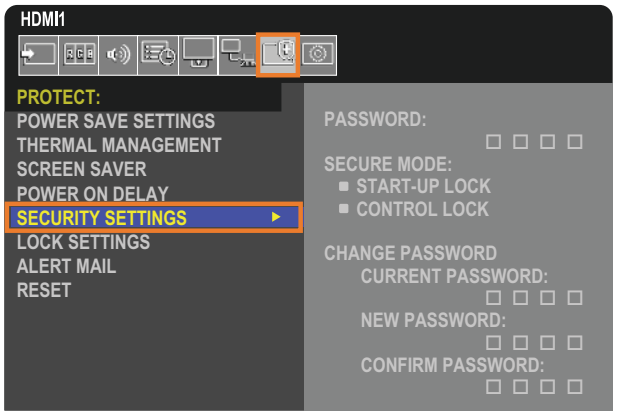

Password Security

When password security is enabled a four-digit passcode is required when turning on the main power and/or accessing the OSD (see page 47). The monitor will function normally after the password is entered. If no buttons have been pressed for 30 seconds, the monitor will return to SECURE MODE automatically and the password will be required again.

NOTE: If you change the password make a note of the password in a secure location. If you forget your password, you will need to contact technical support to get a recovery password to access the monitor OSD menu.

Set a password for the monitor

This step is only required if you want to change the password.

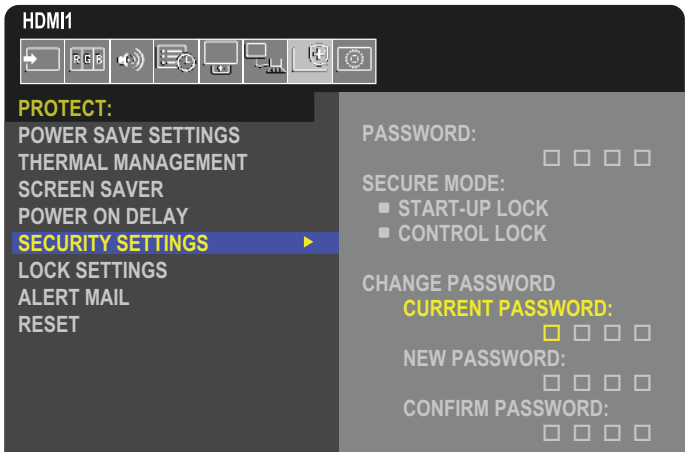

1. Using the remote control, navigate to [PROTECT] then to [SECURITY SETTINGS].
2. Under [CHANGE PASSWORD], enter the password in the [CURRENT PASSWORD] field. (The default password is: 0 0 0 0).
3. Input a [NEW PASSWORD] and then input it again in the [CONFIRM PASSWORD] field.
4. The new password is immediately saved.

Enable password security

1. Using the remote control, navigate to [PROTECT] then to [SECURITY SETTINGS].
2. Enter the password in the [PASSWORD] field to access the [SECURE MODE] settings.
3. Select the type of [SECURE MODE] you want to use:
   - **[START-UP LOCK]** – the password is required when turning on the monitor from the main power switch.

     When this option is selected the password is only required on power cycle using the main power switch or after power failure. This option does not prompt for a password when using the remote control POWER ON and STANDBY buttons or the ⏻ button on the monitor control panel.
   - **[CONTROL LOCK]** – the password is required to use any of the remote control buttons or buttons on the monitor.

Locking the Button Controls

The lock settings prevent the monitor from responding to button presses on the remote control or monitor control panel. When locking the button controls, some buttons can be configured to remain unlocked for users to adjust the settings. Locking and unlocking the button controls do not require a password.

Locking the IR Remote Buttons

The [IR] in the [LOCK SETTINGS] prevent the monitor from being controlled using the remote control. Enabling the [IR] does not lock the buttons on the monitor control panel.

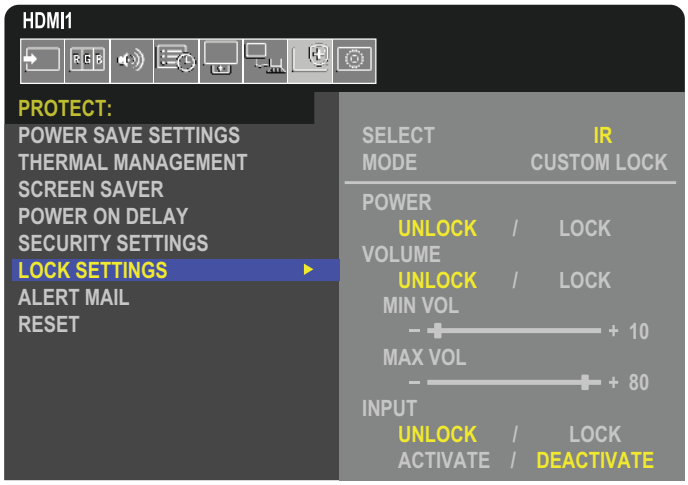

1. Using the remote control, navigate to [PROTECT] then to [LOCK SETTINGS].
2. Under the [SELECT] option, press the ▲, ▼ buttons to change the setting to [IR].
3. Under [MODE] choose the lock mode you want to enable.
   - **[ALL LOCK]** – all buttons are locked.
   - **[CUSTOM LOCK]** – all remote buttons are locked except for the following buttons that can be individually set as locked or unlocked.
     - **[POWER]** – select [UNLOCK] to be able to use the ⏻ button when the IR Remote is locked. Select [LOCK] to lock the button.
     - **[VOLUME]** – select [UNLOCK] to be able to control the volume with the VOL+, VOL– buttons when the IR Remote is locked. Select [LOCK] to prevent volume adjustment.
       - **[MIN VOL]** and **[MAX VOL]** – the volume buttons are unlocked, and the volume level can only be adjusted within the [MIN] and [MAX] range set.

         The [VOLUME] must be set to [UNLOCK] for this setting to operate.

         NOTE: [MIN VOL] and [MAX VOL] lock only works with embedded speakers and Audio Line Out (3.5 mm connector), but it does not work when [CEC] is set to [MODE1] or [MODE2] and [AUDIO RECEIVER] is set to [ENABLE].
     - **[INPUT]** – select [UNLOCK] to unlock all input buttons. Select [LOCK] to lock all input buttons.
4. Select [ACTIVATE] to activate all settings.

Unlocking the Remote Controls

- Remote Control – to return to normal operation press-and-hold the DISPLAY button for at least five seconds.

Locking the Control Panel Buttons

The [KEY] in the [LOCK SETTINGS] prevent the monitor from being controlled using the buttons on the monitor Control Panel. Enabling the [KEY] does not lock the buttons on the remote control.

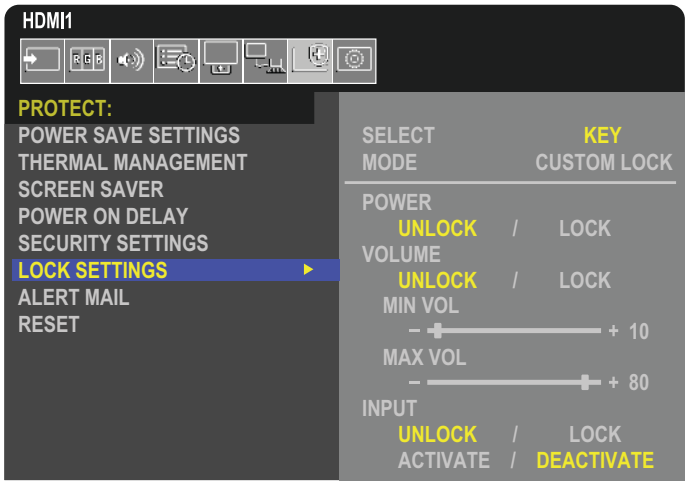

1. Using the remote control, navigate to [PROTECT] then to [LOCK SETTINGS].
2. Under the [SELECT] option, press the ▲, ▼ buttons to change the setting to [KEY].
3. Under [MODE] choose the lock mode you want to enable.
   - **[ALL LOCK]** – all key buttons are locked.
   - **[CUSTOM LOCK]** – all key buttons are locked except for the following buttons that can be individually set to be locked or unlocked.
     - **[POWER]** – select [UNLOCK] to be able to use the ⏻ button when the keys are locked.
     - **[VOLUME]** – select [UNLOCK] to be able to control the volume with the + and – buttons when the keys are locked. Select [LOCK] to prevent volume adjustment.

       When activating the volume lock, the monitor volume will immediately change to the [MIN VOL] value.
       - **[MIN VOL]** and **[MAX VOL]** – the [+] and [–] volume keys are unlocked and the volume can only be adjusted within the [MIN] and [MAX] set.

         The [VOLUME] must be set to [UNLOCK] for this setting to operate.

         NOTE: [MIN VOL] and [MAX VOL] lock only works with embedded speakers and Audio Line Out (3.5 mm connector), but it does not work when [CEC] is set to [MODE1] or [MODE2] and [AUDIO RECEIVER] is set to [ENABLE].
     - **[INPUT]** – select [UNLOCK] to be able to change the inputs using the INPUT/SET button.
4. Select [ACTIVATE] to activate all settings.

Unlocking the Monitor Button Panel Controls

Key Buttons – to return to normal operation press the ▲ and ▼ buttons on the monitor control panel simultaneously, for at least four seconds, to deactivate the key lock settings.

OSD Menu – to return to normal operation, use the remote control to navigate to [PROTECT] then to [LOCK SETTINGS]. Under the [SELECT] option, press the ▲, ▼ buttons to change the setting to [KEY]. Under [MODE] choose [UNLOCK] and then select [ACTIVATE].

Locking the IR Remote Buttons and the Control Panel Buttons

Select [PROTECT] → [LOCK SETTINGS] → [SELECT] → [KEY & IR] from the OSD menu.

For the subsequent setting procedure, buttons for which the lock is enabled, and unlocking method, refer to "Locking the IR Remote Buttons" and "Locking the Control Panel Buttons".

Setting the Remote Control ID Function

The remote control can be used to control up to 100 individual MultiSync monitors using what is called the REMOTE CONTROL ID mode. The REMOTE CONTROL ID mode works in conjunction with the Monitor ID, allowing control of up to 100 individual MultiSync monitors. For example, if there are many monitors being used in the same area, a remote control in normal mode would send signals to every monitor at the same time (see **Figure 1**). Using the remote in REMOTE CONTROL ID mode will only operate one specific monitor within the group (see **Figure 2**).

To Set Remote Control ID

While holding down the REMOTE ID SET button on the remote control, use the KEYPAD to input the Monitor ID (1-100) of the monitor to be controlled via remote. The remote control can then be used to operate the monitor having that specific Monitor ID number.

When 0 is selected or when the remote control is in normal mode, all monitors will be operated.

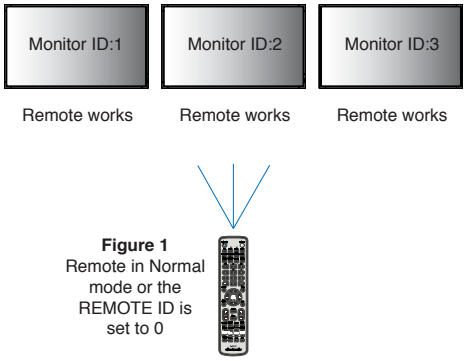

Figure 1
Remote in Normal mode or the REMOTE ID is set to 0

To Set/Reset Remote Control Mode

ID Mode - To enter ID Mode press the REMOTE ID SET button and hold down for 2 seconds.

Normal Mode - To return to Normal Mode press the REMOTE ID CLEAR button and hold down for 2 seconds.

NOTE:
- In order for this feature to work properly, the monitor must be assigned a Monitor ID number. The Monitor ID number can be assigned under the SYSTEM menu in the OSD. See page 89.
- Point the remote control toward the remote sensor of the desired monitor and press the REMOTE ID SET button. The MONITOR ID number is shown on the screen when your remote control is in ID mode.

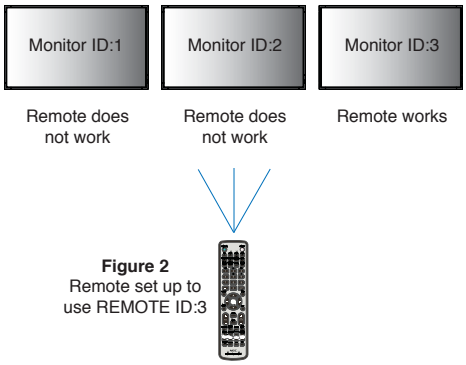

Figure 2
Remote set up to use REMOTE ID:3

You need a remote control for this function.

Use the Remote Control to Control all Monitors in Range

1. On the remote control, press and hold down the REMOTE ID SET button while using the keypad to input the REMOTE CONTROL ID number “0”.
2. All monitors within range of the remote control will now respond to keypad press.

NOTE: When the REMOTE ID is set to “0”, pressing REMOTE ID SET will make all monitors, within range of the remote signal, show their Monitor ID on screen. This way you can easily see what the monitor ID is if you want to control a single monitor, as described below.

Use the remote control to operate a monitor that has a specific MONITOR ID number assigned to it.

1. Set the [MONITOR ID] number for the monitor (see page 89). The [MONITOR ID] number can range from 1-100.

   This [MONITOR ID] number allows the remote control to operate this specific monitor without affecting other monitors.
2. On the remote control, press and hold down the REMOTE ID SET button while using the keypad to input the REMOTE CONTROL ID number (1-100). The REMOTE ID NUMBER should match the MONITOR ID number of the monitor to be controlled.
3. Point the remote control toward the remote sensor of the desired monitor and press the REMOTE ID SET button.

   The MONITOR ID number is shown in red on the monitor.

   If the REMOTE CONTROL ID is “0”, then all monitors in range will show their particular MONITOR ID number in red.

   If the MONITOR ID number is shown in white on the monitor, the MONITOR ID number and the REMOTE CONTROL ID are not the same.

Chapter 6 External Control

This Chapter Includes:

⇨ “Controlling the Monitor via RS-232C” on page 52

⇨ “Controlling the Monitor via LAN” on page 53

⇨ “HTTP Browser” on page 54

⇨ “Commands” on page 60

⇨ “Proof of Play” on page 61

Connecting an external device

There are two options to connect an external device to control the monitor.

- RS-232C terminal.

  Connecting an external device to the RS-232C terminal of the monitor with an RS-232C cable.

- LAN port.

  Connecting a network to the LAN port of the monitor with a LAN cable (RJ45 category 5 or higher).

Controlling the Monitor via RS-232C

This monitor can be controlled by connecting a personal computer with an RS-232C (reverse type) terminal.

NOTE: When you use this function, [CONTROL TERMINAL] in [EXTERNAL CONTROL] should be [RS-232C] (see page 89).

For example, some of the functions that can be controlled by a personal computer are:

- Power ON or standby.
- Switching between input signals.
- Sound Mute ON or OFF.

Connection

Monitor + computer.

- Please turn off the monitor's main power before connecting a computer to the monitor.
- Please turn on the connected computer first then turn on the monitor's main power.

  If you turn on the computer and monitor in reverse order, the com port may not work.

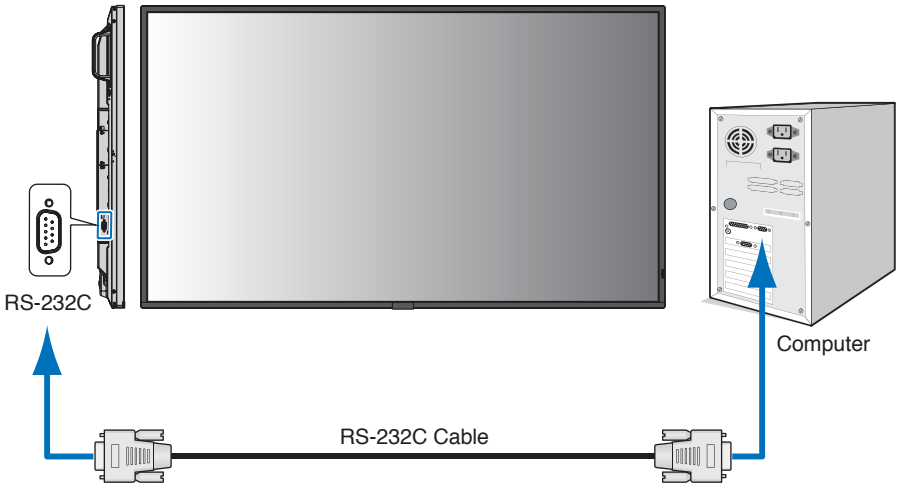

NOTE:
- If your computer is equipped only with a 25-pin serial port connector, a 25-pin serial port adapter is required. Contact your supplier for details.
- For the pin assignment, please see "2) RS-232C input/output" on page 53.

To control the monitor via commands sent from a computer connected with an RS-232C cable, please use the control command. Instructions for the control command can be found in the "External_Control.pdf". See page 73.

This monitor uses RXD, TXD and GND lines for RS-232C control.

The reverse type cable (null modem cable) (not included) should be used for RS-232C control.

PIN ASSIGNMENT

RS-232C input/output

Pin No	Name
1	NC
2	RXD
3	TXD
4	NC
5	GND
6	NC
7	NC
8	NC
9	NC

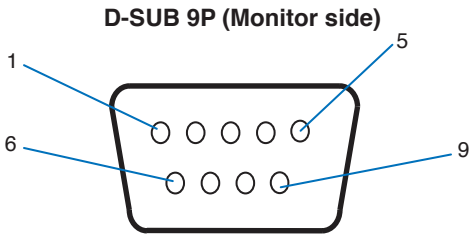

This monitor uses RXD, TXD and GND lines for RS-232C control.

Controlling the Monitor via LAN

Connecting to a Network

Using a LAN cable allows you to specify the Network Settings and the Alert Mail Settings by using an HTTP server function.

NOTE: When you use this function, [CONTROL TERMINAL] in [EXTERNAL CONTROL] should be [LAN] (see page 89).

To use a LAN connection, you are required to assign an IP address (see page 85). The monitor will obtain an IP address automatically when connected to a DHCP network.

Example of LAN connection:

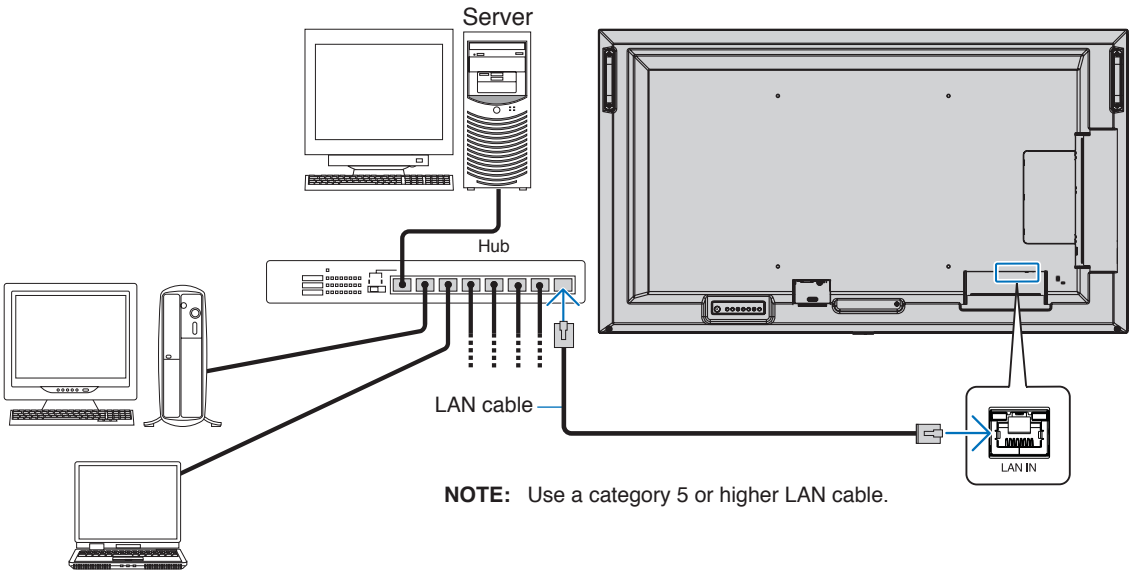

NOTE: Use a category 5 or higher LAN cable.

HTTP Browser

Overview

Connecting the monitor to a network allows for remote control of the monitor from a computer connected to the same network.

This device uses “JavaScript” and “Cookies” and the browser should be set to accept these functions. Refer to the help files for the web browser to change the settings to use JavaScript and Cookies.

To access the HTTP browser, launch a web browser on a computer connected to the same network as the monitor and enter the following URL in the web address field:

Network Setting

http://<the Monitor’s IP address>/index.html

NOTE:
- The default IP address is assigned automatically to the monitor.
- NaViSet Administrator software for managing monitors over the network is recommended. It can be download from our website (See page 73).
- If the MONITOR NETWORK SETTINGS screen does not appear in the web browser, press the Ctrl+F5 keys to refresh your web browser (or clear the cache).
- If the monitor appears to be slow in response to commands or clicks on buttons in the browser, or the general speed of operation is unacceptable, this may be due to network traffic or the settings on your network. Should this happen, consult your network administrator.
- The monitor may not respond if the buttons shown on the browser are repeatedly pressed in rapid intervals. Should this happen, wait a moment and repeat. If you still can’t get a response, turn the monitor off and then back on.

Preparation Before Use

Connect the monitor to the network, using a commercially available LAN cable, before attempting to use browser operations.

Operation with a browser that uses a proxy server may not be possible depending on the type of proxy server and the setting method. Although the type of proxy server will be a factor, it is possible that items that have been set will not be shown, depending on the effectiveness of the cache, and the contents set from the browser may not be reflected in operation. It is recommended that a proxy server is not used unless the network environment requires it.

Handling of the Address for Operation via a Browser

A host name can be used in the following cases (corresponding to the IP address of the monitor):

The host name must be registered in the domain name system (DNS) by the network administrator. You can then access the network settings of the monitor via this registered host name by using a compatible browser.

If the host name has been configured in the “HOSTS” file of the computer being used, you can then access the network settings of the monitor via this host name by using a compatible browser.

Example 1: When the host name of the monitor has been set to “pd.xxx.co.jp”, access is gained to the network setting by specifying http://pd.xxx.co.jp/index.html for the address or the entry column of the URL.

Example 2: When the IP address of the monitor is “192.168.73.1”, access is gained to the mail alert settings by specifying http://192.168.73.1/index.html for the address or the entry column of the URL.

Operation

Access the following address to show HOME.

http://<the Monitor’s IP address>/index.html

Click each link on the left-hand column below HOME.

OSD Menu Settings in the Monitor Web controls

Select one of the links on the left side of the monitor web controls to configure the settings available in the monitor's OSD. Please see page 75 for the full list of OSD menu controls.

[INPUT], [PICTURE], [AUDIO], [SCHEDULE], [SLOT], [NETWORK], [PROTECT], [SYSTEM]

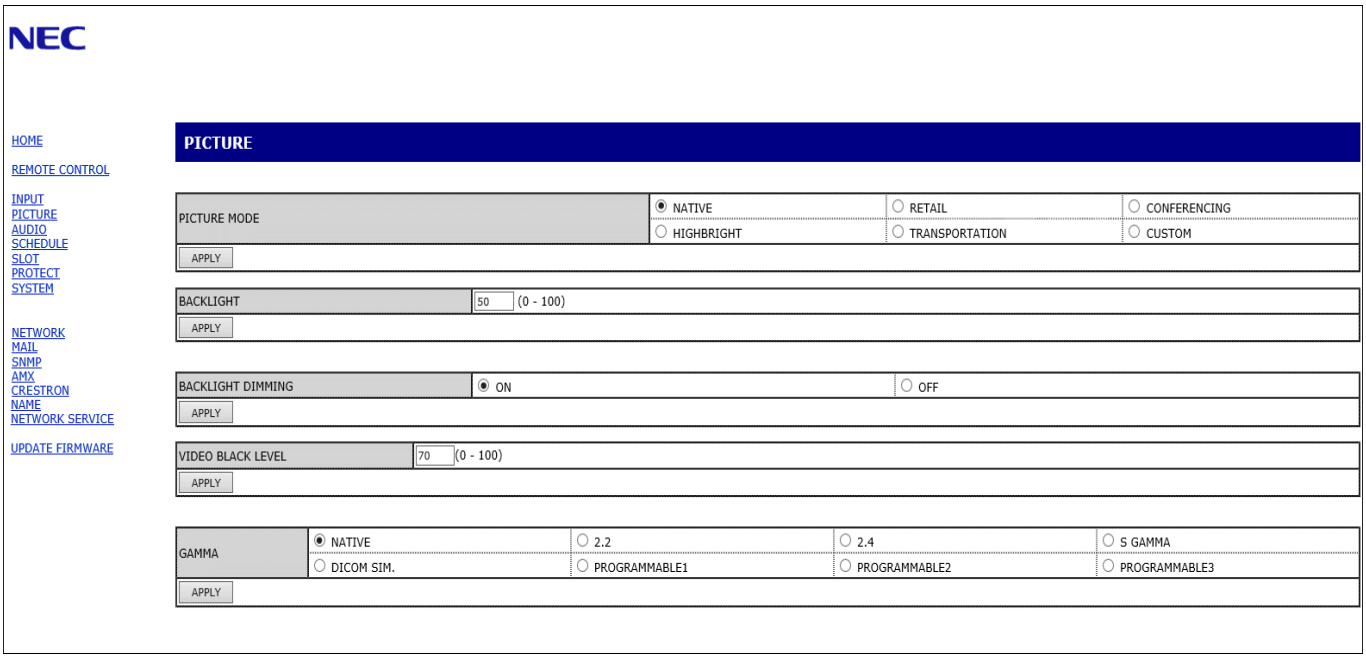

NOTE: The buttons in the monitor web controls function as follows:

[APPLY]: Saves the settings.

[CANCEL]: Returns to the previous settings.
NOTE: CANCEL is disabled after clicking APPLY.

[RELOAD]: Reloads the settings.

[RESET]: Resets to the initial settings.

Network Settings

Click on “NETWORK” on the left-hand column below HOME.

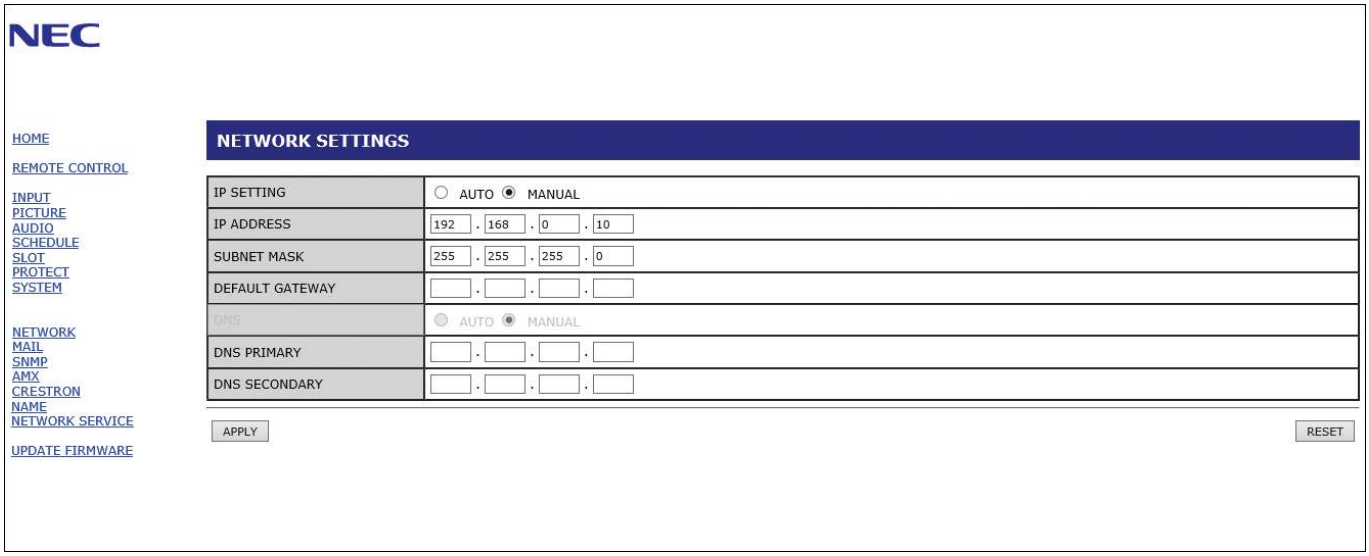

IP SETTING	Select an option for setting the IP ADDRESS. AUTO: Automatically assign an IP address. MANUAL: Manually set an IP address for the monitor connected to the network. NOTE: Consult your network administrator if you have any trouble.
IP ADDRESS	Set your IP address for the monitor connected to the network when [MANUAL] is selected for [IP SETTING].
SUBNET MASK	Set your subnet mask data for the monitor connected to the network when [MANUAL] is selected for [IP SETTING].
DEFAULT GATEWAY	Set your default gateway for the monitor connected to the network when [MANUAL] is selected for [IP SETTING]. NOTE: Set as [0.0.0.0] to delete the setting.
DNS	Set for IP ADDRESS setting of DNS server. AUTO: The DNS server connected to the monitor will automatically assign its IP address. MANUAL: Manually enter the IP address of the DNS server that is connected to the monitor.
PRIMARY DNS	Enter the primary DNS server settings of the network connected to the monitor. NOTE: Enter [0.0.0.0] to delete the setting.
SECONDARY DNS	Enter the secondary DNS server settings of the network connected to the monitor. NOTE: Enter [0.0.0.0] to delete the setting.

Mail Setting

Click on “MAIL” on the left-hand column below HOME.

When the Mail settings are configured and enabled, the monitor sends email notifications when an error occurs or if the input signal is lost. The monitor must be connected to a LAN for this feature to work.

Alert Mail	When an error occurs, the monitor will send an error message to the email address(es) listed in the Recipient’s Address fields. Please see the “Alert error list” table below. Note that it is not an error when no input signal is detected. The monitor will only send a no signal input notification email when Status Message is enabled. Selecting [ENABLE] turns on the Alert Mail feature. Selecting [DISABLE] turns off the Alert Mail feature.
Status Message	This is a setting for whether to include the ‘no signal’ condition as an alerting condition or not. Selecting [ENABLE], Alert Mail send mails when the monitor has no signal or is in alerting conditions. Selecting [DISABLE], Alert Mail send mails when the monitor is in alerting conditions. It doesn’t send mail when the monitor has no signal.
Sender’s Address	Type in the sender’s address. Up to 60 alphanumeric and symbols characters can be used.
SMTP Server	Type in the SMTP server name to be connected with the monitor. Up to 60 alphanumeric characters can be used.
Recipient’s Address 1 to 3	Type in your recipient’s address. Up to 60 alphanumeric and symbols characters can be used.
Authentication Method	This selects the authentication method of the email transmission.
POP3 Server	This specifies the address of the POP3 server that is used in the authentication of the email.
User Name	This sets the user name for logging into the authentication server when authentication is required for the email transmission. Up to 60 alphanumeric characters can be used.
Password	This sets the password for logging into the authentication server when authentication is required for the email transmission. Up to 60 alphanumeric characters can be used.
Test Mail	Click on this button to send a test email to check if your settings are correct.

NOTE:
- If an alert email isn’t received when performing a Test Mail, check that the network and server settings, and the recipient’s email address are correct.
- If you entered an incorrect address in a test, you may not receive an Alert email.
  Should this happen, check that the Recipient’s Address is correct.

Alert error list

Error number * ErrorCode	Alert mail Message	Explanation	Measure
70h ~ 7Fh	The monitor’s power supply is not functioning normally.	Standby power abnormal	Please contact your supplier.
80h ~ 8Fh	The cooling fan has stopped.	Cooling fan abnormal	Please contact your supplier.
90h ~ 9Fh	The monitor’s backlight unit is not functioning normally.	Backlight abnormal	Please contact your supplier.
A0h ~ AFh	The monitor is overheated.	Temperature abnormal	Please contact your supplier.
B0h ~ BFh	The monitor does not receive an input signal.	No signal	Please check “No picture” in “Troubleshooting”.
D0h	The remaining capacity of the error log decreased.	The Proof of Play log memory size is 1 more hour.	Please get a log by using PD external command. See page 61.
D1h	The battery for clocks is empty.	The battery is empty.	Please connect the monitor to the power then recharge the battery. Please set (DATE & TIME) in OSD.
E0h ~ EFh	A system error occurred in the monitor.	System error.	Please contact your supplier.

SNMP Settings

Click on “SNMP” on the left-hand column below HOME.

The SNMP protocol is used to get status information and to control a monitor directly via the network.

Version:

SNMP v1 Authenticated plaintext by community name, does not return a confirmation message of the trap.

SNMP v2c Authenticated plaintext by community name, returns a confirmation message of the trap.

Community name:

The default setting of community name is “public”. It is read-only. You can set community names for up to 3 settings.

Trap:

Sending error message to a specified address when an error occurs in the monitor.

Check Box	Explanation	Error code
Temperature	Temperature abnormal	0xA0, 0xA1, 0xA2
Fan	Cooling fan abnormal	0x80, 0x81
Power	Power abnormal	0x70, 0x71, 0x72, 0x78
Inverter/Backlight	Inverter or backlight abnormal	0x90, 0x91
No Signal	No signal	0xB0
PROOF OF PLAY	Lower the log storage	0xD0
System Error	System error	0xE0

AMX Settings

Click on “AMX” on the left-hand column below HOME.

AMX BEACON	To turn on or off for the detection from AMX Device Discovery when connecting to a network supported by an AMX’s NetLinx control system. HINT: When using a device that supports AMX Device Discovery, all AMX NetLinx control systems will recognize the device and download the appropriate Device Discovery Module from an AMX server. Selecting [ENABLE] AMX Device Discovery will detect the device. Selecting [DISABLE] AMX Device Discovery will not detect the device.

CRESTRON Settings

Click on “CRESTRON” on the left column below HOME.

CRESTRON ROOMVIEW compatibility

The monitor supports CRESTRON ROOMVIEW, allowing multiple devices connected in the network to be managed and controlled from a computer or a controller.

For further information, visit https://www.crestron.com

ROOMVIEW	ROOMVIEW for managing from the computer. ON: Enables ROOMVIEW. OFF: Disables ROOMVIEW.
CRESTRON CONTROL	CRESTRON CONTROL for managing from the controller. ON: Enables CRESTRON CONTROL. OFF: Disables CRESTRON CONTROL.
CONTROLLER IP ADDRESS	Sets the IP address of the CRESTRON SERVER.
IP ID	Sets your CRESTRON SERVER IP ID.

HINT: The CRESTRON settings are required only for use with CRESTRON ROOMVIEW.
For further information, visit https://www.crestron.com

Name Settings

Click on “NAME” on the left-hand column below HOME.

MONITOR NAME	Allows you to customize the monitor’s name, up to a maximum of 16 characters long. This name is shown when searching for devices on the network when using an application such as NaViSet Administrator. Giving the monitor a unique name allows it to be easily identified when viewing a list of monitors on the network. The default name is the monitor’s model name.
HOST NAME	Type in the hostname of the monitor which is connected to the network. Up to 15 alphanumeric characters can be used.
DOMAIN NAME	Type in the domain name of the network which is connected with the monitor. Up to 60 alphanumeric characters can be used.

Network Service Settings

Click on “NETWORK SERVICE” on the left-hand column below HOME.

PJLink CLASS	Set a class for PJLink*. NOTE: PJLink is a network interface standard that JBMIA established. http://pjlink.jbmia.or.jp/index.html This monitor is available for class1 and class2 command.
NOTIFY FUNCTION ENABLE	Enable or disable a notification of the monitor network condition. This function is only for class2.
NOTIFY ADDRESS	Set an IP ADDRESS to which the monitor network status will be sent. This function is only for class2.
PJLink PASSWORD	Set a password for PJLink*. The password must be max. 32 characters long. Do not forget your password. If you forget your password, consult your supplier.
HTTP PASSWORD	Set a password for the HTTP server. The password must be max. 32 characters long.
HTTP PASSWORD ENABLE	An HTTP PASSWORD is required when logging into the HTTP server. Set the monitor name as the USER NAME when entering the password.

*What is PJLink?

PJLink is a standardization of protocol used for controlling devices of different manufacturers. This standard protocol was established by Japan Business Machine and Information System Industries Association (JBMIA) in 2005.

The device supports all commands of PJLink.

Commands

Connecting the monitor to a computer via RS-232C or to a network via LAN allows for the transmission of commands to the monitor, providing remote control of the monitor from a connected device.
Instructions for each command format can be found in the external documents “External_Control.pdf”. See page 73.

RS-232C Interface

PROTOCOL	RS-232C
BAUD RATE	9600 [bps]
DATA LENGTH	8 [bits]
PARITY	NONE
STOP BIT	1 [bit]
FLOW CONTROL	NONE

LAN Interface

PROTOCOL	TCP
PORT NUMBER	7142
COMMUNICATION SPEED	AUTO setting (10/100Mbps)

ASCII Control command

This monitor supports control command, which is listed in the “External_Control.pdf” (See page 73), but also supports common ASCII control command, which is used for controlling the NEC monitor or projector from a connected computer.
For further information please visit our website.

NOTE: If you turn off the monitor when [SLOT POWER] is [OFF] and [QUICK START] is [DISABLE], ASCII command control is not available over RS-232C.
To activate ASCII command control while the monitor is off, set either [SLOT POWER] to [ON] or [QUICK START] to [ENABLE].

Parameter

Input command

Input signal name	Response	Parameter
HDMI1	hdmi1	hdmi1 or hdmi
HDMI2	hdmi2	hdmi2
DisplayPort	DisplayPort	DisplayPort
Media Player	mp	mp
OPTION	option	option
COMPUTE MODULE	compute_module	compute_module

Status command

Response	Error status
error:temp	Temperature abnormal
error:fan	Cooling fan abnormal
error:light	Inverter or backlight abnormal
error:system	System error

Proof of Play

This function allows sending of messages for the current status of the monitor by self-diagnosis.

For the Proof of Play function including self-diagnosis, please see the “External_Control.pdf”. See page 73.

Check item		Message
①	INPUT	DisplayPort, HDMI1, HDMI2, Media Player, COMPUTE MODULE, OPTION*
②	Resolution	e.g. (H)1920, (V)1080, (H)3840, (V)2160 or No signal or Invalid signal
③	Audio signal	Audio in or No Audio in or N/A
④	Picture Image	Normal Picture or No Picture
⑤	AUDIO OUT	Normal Audio or No Audio
⑥	TIME	(year)/(month)/(day)/(hour)/(minutes)/(second)
⑦	EXPANSION DATA	00h: Normal Proof of Play event 01h: Proof of Play event is “last power on time” 10h: MEDIA PLAYER is stop 11h: MEDIA PLAYER is start 12h: MEDIA PLAYER is pause 13h: MEDIA PLAYER error occur 40h: Human detected (Human sensor Status) 41h: Human detect cleared (Human Sensor Status)

*: This function depends on which Option Board is installed in the monitor.

Example:

① HDMI1
② 3840 x 2160
③ Audio in
④ Normal Picture
⑤ Normal Audio
⑥ 2020/1/1/0h/0m/0s
⑦ 10h: MEDIA PLAYER is stop

Chapter 7 Troubleshooting

This Chapter Includes:

- ⇨ “Screen Image and Video Signal Issues” on page 63
- ⇨ “No picture” on page 63
- ⇨ “Image persistence” on page 63
- ⇨ “The image is blinking” on page 63
- ⇨ “The image is unstable, unfocused or swimming is apparent” on page 64
- ⇨ “The image is not properly reproduced” on page 64
- ⇨ “Selected resolution is not displayed properly” on page 64
- ⇨ “Video contrast is either too high or too low” on page 64
- ⇨ “Hardware Issues” on page 64
- ⇨ “⏻ button does not respond” on page 64
- ⇨ “No sound” on page 64
- ⇨ “The remote control is not functioning” on page 64
- ⇨ “The SCHEDULE/OFF TIMER function is not working properly” on page 64
- ⇨ “Snowy picture, poor Sound in TV” on page 65
- ⇨ “The USB hub does not operate” on page 65
- ⇨ “Interference in TV” on page 65
- ⇨ “RS-232C or LAN control is not available” on page 65
- ⇨ “The monitor goes into standby automatically” on page 65
- ⇨ “Media player function does not recognize the USB storage device” on page 65
- ⇨ “Power Indicator Patterns” on page 65
- ⇨ “LED on the monitor is not lit (no blue or red color can be seen)” on page 65
- ⇨ “LED colors, except for blue, are blinking or glowing” on page 65

Screen Image and Video Signal Issues

No picture

- The signal cable should be completely connected to the display card/computer.
- The display card should be completely seated in its slot.
- Check the main Power Switch, it should be in the ON position.
- Make sure both the computer and monitor are powered on.
- Make sure that a supported resolution has been selected on the display card or system being used. If in doubt, please refer to the user's manual of the display controller or system to change the resolution.
- Check the monitor and your display card with respect to compatibility and recommended signal timings.
- Check the signal cable connector for bent or pushed-in pins.
- The monitor automatically goes into standby at the preset time period after the video signal is lost. Press the power on button on the remote control or press the ⏻ button on the monitor.
- If you unplug the signal cable when starting the computer, images may not be shown. Turn off the monitor and the computer and then connect the signal cable and turn on the computer and the monitor.
- Check the [SLOT POWER] setting when you use Option Board accessories.
- Check for HDCP (High-bandwidth Digital Content Protection) content. HDCP is a system for preventing illegal copying of video data sent over a digital signal. If you are unable to view material via the digital inputs, this does not necessarily mean that the monitor is not functioning properly. With the implementation of HDCP, there may be cases in which certain content is protected by HDCP and might not be shown due to the decision/intention of the HDCP community (Digital Content Protection, LLC).

Image persistence

- Please be aware that LCD Technology may experience a phenomenon known as image persistence. Image persistence occurs when a residual or "ghost" image of a previous image remains visible on the screen. Unlike CRT monitors, the image persistence of monitors is not permanent, but a single still image being shown for a long period of time should be avoided. To alleviate image persistence, put the monitor into standby via remote control or turn the monitor's main power off for as long as the previous image was shown. For example, if an image was on the monitor for one hour and a residual image remains, the monitor should be in standby or turned off for one hour to erase the image.

NOTE: As with all personal display devices, we recommend showing moving images, using a moving screen saver, or changing still images at regular intervals whenever the screen is idle, or putting the monitor into standby or turning it off when not in use.

The image is blinking

- If you use a signal repeater or distributor or a long cable, this may cause image roughness or blink for a moment. In this case please connect the cable to the monitor directly without using a repeater or a distributor, or replace the cable with a higher quality cable. Using a twisted pair extender may cause image roughness depending on the environment where the monitor is in or the cable you are using. For further information please ask your supplier.
- Some HDMI cables may not show a correct image. If input resolution is 1920 x 2160, 3840 x 2160 or 4096 x 2160, please use an HDMI cable which is approved to support 4K resolution.

The image is unstable, unfocused or swimming is apparent

- The signal cable should be completely attached to the computer.
- Please adjust settings in the [ADJUST] of the [PICTURE MODE] by checking the image on the screen.
- When the display mode is changed, the OSD Image Adjust settings may need to be re-adjusted.
- Check the monitor and your display card with respect to compatibility and recommended signal timings.
- If text looks garbled, change the video mode to non-interlaced and use a 60 Hz refresh rate.
- The image may be distorted when turning the power on or changing the settings.

The image is not properly reproduced

- Use the OSD Image Adjust controls to increase or decrease the coarse adjustment.
- Make sure that a supported resolution has been selected on the display card or system being used.
- If in doubt, please refer to the user's manual of the display card or system to change the resolution.

Selected resolution is not displayed properly

- Check the Information OSD to verify the appropriate resolution has been selected.
- If the resolution you set is over or under a range, an "OUT of RANGE" window will appear in order to warn you. Please set supported resolution at the connected computer.

Video contrast is either too high or too low

- Check that the correct option for the VIDEO LEVEL is selected for the input signal.
  This only applies to video signals on the DisplayPort, HDMI, and OPTION inputs.
  - **Blacks are crushed and whites are clipped** - change the VIDEO LEVEL to RAW.
    Crushing blacks and clipping whites can occur when the monitor's VIDEO LEVEL is set to EXPAND while the source video signal's color levels are RGB Full (RGB 0-255), causing lost details in the shadows and highlights and the image appears overly high in contrast.
  - **Blacks are dark grey and whites are dull** - change the VIDEO LEVEL to EXPAND.
    Dulling blacks and whites can occur when the VIDEO LEVEL is set to RAW while the source video signal's color levels are RGB Limited (RGB 16-235), which effectively appears to prevent the monitor from obtaining its full brightness range and the image appears to be lacking in contrast.

Either light vertical or horizontal stripes may appear, depending on the specific image pattern. This is not a product fault or degradation.

Hardware Issues

⏻ button does not respond

- Unplug the power cord of the monitor from the AC outlet to turn off and reset the monitor.
- Check the main power switch on the monitor.

No sound

- Check to see if the audio cable is properly connected.
- Check to see if [MUTE] is activated. Use the remote control to enable or disable the mute function.
- Check to see if [VOLUME] is set to a minimum.
- Check to see if the computer supports an audio signal through DisplayPort.

  If unsure, contact your supplier.
- An audio signal via the audio output connector cannot be adjusted by [SURROUND] and [EQUALIZER] in the OSD menu.
- If HDMI-CEC audio device is not connected, please set [AUDIO RECEIVER] to [DISABLE].

The remote control is not functioning

- The batteries may be drained. Please change the batteries, then check if the remote control works.
- Check that the batteries are inserted correctly.
- Check that the remote control is pointing at the remote control sensor of the monitor.
- Check the status of [LOCK SETTINGS].
- The remote control system may not function when direct sunlight or strong illumination strikes the remote control sensor of the monitor, or when there is an object in the path.

The SCHEDULE/OFF TIMER function is not working properly

- The [SCHEDULE] function will be disabled when the [OFF TIMER] is set.
- If the [OFF TIMER] function is enabled and the power to the monitor is turned off when the power supply is interrupted unexpectedly, then the [OFF TIMER] will be reset.

Snowy picture, poor Sound in TV

- Check antenna/cable connection. Use new cable if necessary.

The USB hub does not operate

- Check to make sure that the USB cable is properly connected. Refer to your USB device user's manual.
- Check that the USB upstream port on the monitor is connected to the USB downstream port on the computer. Please make sure the computer is [ON] or [USB POWER] is [ON].

Interference in TV

- Check components for shielding, move away from monitor if necessary.

RS-232C or LAN control is not available

- Check RS-232C (reverse type) or the LAN cable. A category 5 or higher LAN cable is required for connection.

The monitor goes into standby automatically

- Please check [OFF TIMER] setting.
- Set the [CEC] function to [OFF]. The monitor may go into standby mode when a connected HDMI-CEC compatible device goes into standby.
- Please check [POWER] in the [SCHEDULE INFORMATION].

Media player function does not recognize the USB storage device

- Check that a USB storage device is connected to the USB port.
- Check the file format of the USB storage device if it is not recognized by the monitor.

Power Indicator Patterns

LED on the monitor is not lit (no blue or red color can be seen)

- Make sure the power cord is properly connected to the monitor and the wall, and make sure the monitor's main power switch is ON.
- Make certain the computer is not in a power-saving mode (touch the keyboard or move the mouse).
- Check that the [POWER INDICATOR] is set to [ON] in the [CONTROL] settings of the OSD menu.

LED colors, except for blue, are blinking or glowing

- A certain failure might have occurred, please contact your supplier.
- If the monitor is powered off due to the internal temperature being higher than the normal operating temperature, the LED will blink green or amber or red for six times. Please leave the monitor to cool down for a few minutes then turn it on again.
- The monitor could be in standby.

  Press the power on button on the remote control or press the ⏻ button on the monitor.

Chapter 8 Specifications

This Chapter Includes:

- ⇨ “Compatible Signal List” on page 67
- ⇨ “M431-2” on page 68
- ⇨ “M501-2” on page 69
- ⇨ “M551-2” on page 70
- ⇨ “M651-2” on page 71

Compatible Signal List

Signal name	Resolution	Scanning frequency		HDMI		DisplayPort	Remarks
		Horizontal	Vertical	MODE1	MODE2		
VGA	640 x 480	31.5 kHz	60 Hz	Yes	Yes	Yes	
SVGA	800 x 600	37.9 kHz	60 Hz	Yes	Yes	Yes	
XGA	1024 x 768	48.4 kHz	60 Hz	Yes	Yes	Yes	
HD	1280 x 720	45.0 kHz	60 Hz	Yes	Yes	Yes	
WXGA	1280 x 768	47.8 kHz	60 Hz	Yes	No	Yes	
	1280 x 800	49.7 kHz	60 Hz	Yes	Yes	Yes	
SXGA	1280 x 1024	64 kHz	60 Hz	Yes	Yes	Yes	
WXGA	1360 x 768	47.7 kHz	60 Hz	Yes	No	Yes	
	1366 x 768	47.7 kHz	60 Hz	Yes	No	Yes	
SXGA+	1400 x 1050	65.3 kHz	60 Hz	Yes	Yes	Yes	
WXGA+	1440 x 900	55.9 kHz	60 Hz	Yes	Yes	Yes	
UXGA	1600 x 1200	75.0 kHz	60 Hz	Yes	Yes	Yes	
WSXGA+	1680 x 1050	65.3 kHz	60 Hz	Yes	Yes	Yes	
Full HD	1920 x 1080	67.5 kHz	60 Hz	Yes	Yes	Yes	
WUXGA	1920 x 1200	74.6 kHz	60 Hz	No	Yes	Yes	
4K/2	1920 x 2160	133.3 kHz	60 Hz	No	Yes	No	
4K	3840 x 2160	54.0 kHz	24 Hz	Yes	Yes	Yes	
	3840 x 2160	56.3 kHz	25 Hz	Yes	Yes	Yes	
	3840 x 2160	65.7 kHz	30 Hz	No	No	Yes	
	3840 x 2160	67.5 kHz	30 Hz	Yes	Yes	Yes	
	3840 x 2160	112.5 kHz	50 Hz	No	Yes	Yes*	
	3840 x 2160	133.3 kHz	60 Hz	No	No	Yes*	Recommended resolution
	3840 x 2160	135.0 kHz	60 Hz	No	Yes	Yes*	Recommended resolution
	4096 x 2160	54.0 kHz	24 Hz	Yes	Yes	Yes	Compressed image
	4096 x 2160	56.3 kHz	25 Hz	No	Yes	Yes	Compressed image
	4096 x 2160	67.5 kHz	30 Hz	No	Yes	Yes	Compressed image
	4096 x 2160	112.5 kHz	50 Hz	No	Yes	Yes*	Compressed image
	4096 x 2160	135.0 kHz	60 Hz	No	Yes	Yes*	Compressed image
HDTV (1080p)	1920 x 1080	27.0 kHz	24 Hz	Yes	Yes	Yes	
	1920 x 1080	28.1 kHz	25 Hz	Yes	Yes	Yes	
	1920 x 1080	33.8 kHz	30 Hz	Yes	Yes	Yes	
	1920 x 1080	56.3 kHz	50 Hz	Yes	Yes	Yes	
	1920 x 1080	67.5 kHz	60 Hz	Yes	Yes	Yes	
HDTV (1080i)	1920 x 1080 (interlace)	28.1 kHz	50 Hz	Yes	Yes	Yes	
	1920 x 1080 (interlace)	33.8 KHz	60 Hz	Yes	Yes	Yes	
HDTV (720p)	1280 x 720	37.5 kHz	50 Hz	Yes	Yes	Yes	
	1280 x 720	45.0 kHz	60 Hz	Yes	Yes	Yes	
SDTV (576p)	720 x 576	31.3 kHz	50 Hz	Yes	Yes	Yes	
SDTV (480p)	720 x 480	31.5 kHz	60 Hz	Yes	Yes	Yes	
SDTV (576i)	720 x 576 (interlace)	15.6 kHz	50 Hz	Yes	Yes	No	
SDTV (480i)	720 x 480 (interlace)	15.7 kHz	60 Hz	Yes	Yes	No	

*: Only HBR2 is set.

NOTE:
- Depending on the input signal's resolution, characters may look blurred or figures may be distorted.
- Depending on the video card or driver used, the image may not be shown correctly.

M431-2

Product Specifications

LCD Module				43”/108.0 cm diagonal Pixel Pitch: 0.245 mm Resolution: 3840 x 2160 Color: Over 1073 million colors (depending on display card used) Brightness*4: 500 cd/m² (Max.) Contrast Ratio: 1200:1 Viewing Angle: 89° (typ) @ CR>10
Frequency				Horizontal: 15 - 136 kHz Vertical: 23 - 76 Hz
Pixel Clock				25 - 600 MHz (HDMI/DisplayPort)
Viewable Size				941.18 x 529.42 mm
Input Signal				
	DisplayPort	DisplayPort Connector	Digital RGB	DisplayPort (Up to 4096x2160 (60 Hz), HDCP 1.3/2.2)
	HDMI	HDMI Connector	Digital YUV Digital RGB	HDMI (Up to 4096x2160 (60 Hz), HDCP 1.4/2.2)
AUDIO				
	AUDIO Input	DisplayPort Connector	Digital Audio	PCM 32, 44.1, 48 kHz (16/20/24 bit)
		HDMI Connector	Digital Audio	PCM 32, 44.1, 48 kHz (16/20/24 bit)
	AUDIO Output	Stereo Mini Jack	Analog Audio	Stereo L/R 0.5 Vrms
		HDMI (ARC)*3	Digital Audio	PCM 32, 44.1, 48 kHz (16/20/24 bit)
Speaker Output				Internal Speaker 10 W + 10 W (Stereo)
Control				RS-232C In: 9 Pin D-sub LAN: RJ-45 10 BASE-T/100 BASE-TX Remote IN: Stereo Mini Jack 3.5 mm Ø
USB				Power supply port, 5 V/2 A (max.) Media Player/Firmware update port
Power Supply				1.9 - 0.8 A @ AC 100 - 240 V 50/60 Hz
Power Consumption				Normal operation: Approx. 80 W
Operational Environment				Temperature*1: 0 - 40 °C / 32 - 104 °F Humidity: 20 - 80 % (without condensation) Altitude: 0 - 3000 m (Brightness may decrease with altitude)
Storage Environment				Temperature: –20 - 60 °C / –4 - 140 °F Humidity: 10 - 80 % (without condensation) / 80 % - 3.5 % x (Temp - 40 °C) regarding over 40 °C
Dimension*2				973 (W) x 561.2 (H) x 83.5 (D) mm/38.31 (W) x 22.09 (H) x 3.29 (D) inches (with handle) 973 (W) x 561.2 (H) x 62.6 (D) mm/38.31 (W) x 22.09 (H) x 2.46 (D) inches (without handle)
Weight				13.9 kg (30.6 lbs)
VESA compatible mounting interface				200 mm x 200 mm (M6, 4 Holes)
Power supply for Option Board				12 V/3.4 A
Power supply for Raspberry Pi Compute Module				12 V/1.67 A

NOTE: Technical specifications are subject to change without notice.

*1: When you use Option Board accessories, please contact your supplier for detailed information.
*2: Measurements are of the monitor only and do not include removable parts that protrude.
*3: HDMI1 only.
*4: The Brightness level changes depending on the input settings, picture settings, installation environment, and individual product characteristics.
The overall Brightness decreases as the product ages due to deterioration over time. It does not maintain a permanent brightness level throughout the product’s life.

M501-2

Product Specifications

LCD Module				50”/125.7 cm diagonal Pixel Pitch: 0.285 mm Resolution: 3840 x 2160 Color: Over 1073 million colors (depending on display card used) Brightness*4: 500 cd/m² (Max.) Contrast Ratio: 4000:1 Viewing Angle: 89° (typ) @ CR>10
Frequency				Horizontal: 15 - 136 kHz Vertical: 23 - 76 Hz
Pixel Clock				25 - 600 MHz (HDMI/DisplayPort)
Viewable Size				1095.84 x 616.41 mm
Input Signal				
	DisplayPort	DisplayPort Connector	Digital RGB	DisplayPort (Up to 4096x2160 (60 Hz), HDCP 1.3/2.2)
	HDMI	HDMI Connector	Digital YUV Digital RGB	HDMI (Up to 4096x2160 (60 Hz), HDCP 1.4/2.2)
AUDIO				
	AUDIO Input	DisplayPort Connector	Digital Audio	PCM 32, 44.1, 48 kHz (16/20/24 bit)
		HDMI Connector	Digital Audio	PCM 32, 44.1, 48 kHz (16/20/24 bit)
	AUDIO Output	Stereo Mini Jack	Analog Audio	Stereo L/R 0.5 Vrms
		HDMI (ARC)*3	Digital Audio	PCM 32, 44.1, 48 kHz (16/20/24 bit)
Speaker Output				Internal Speaker 10 W + 10 W (Stereo)
Control				RS-232C In: 9 Pin D-sub LAN: RJ-45 10 BASE-T/100 BASE-TX Remote IN: Stereo Mini Jack 3.5 mm Ø
USB				Power supply port, 5 V/2 A (max.) Media Player/Firmware update port
Power Supply				2.4 - 1.0 A @ AC 100 - 240 V 50/60 Hz
Power Consumption				Normal operation: Approx. 85 W
Operational Environment				Temperature*1: 0 - 40 °C / 32 - 104 °F Humidity: 20 - 80 % (without condensation) Altitude: 0 - 3000 m (Brightness may decrease with altitude)
Storage Environment				Temperature: –20 - 60 °C / –4 - 140 °F Humidity: 10 - 80 % (without condensation) / 80 % - 3.5 % x (Temp - 40 °C) regarding over 40 °C
Dimension*2				1128.4 (W) x 649 (H) x 77.1 (D) mm/44.43 (W) x 25.55 (H) x 3.04 (D) inches (with handle) 1128.4 (W) x 649 (H) x 62.6 (D) mm/44.43 (W) x 25.55 (H) x 2.46 (D) inches (without handle)
Weight				17.3 kg (38.1 lbs)
VESA compatible mounting interface				400 mm x 400 mm (M6, 4 Holes)
Power supply for Option Board				12 V/5.5 A
Power supply for Raspberry Pi Compute Module				12 V/1.67 A

NOTE: Technical specifications are subject to change without notice.

*1: When you use Option Board accessories, please contact your supplier for detailed information.
*2: Measurements are of the monitor only and do not include removable parts that protrude.
*3: HDMI1 only.
*4: The Brightness level changes depending on the input settings, picture settings, installation environment, and individual product characteristics.
The overall Brightness decreases as the product ages due to deterioration over time. It does not maintain a permanent brightness level throughout the product’s life.

M551-2

Product Specifications

LCD Module				55”/138.8 cm diagonal Pixel Pitch: 0.315 mm Resolution: 3840 x 2160 Color: Over 1073 million colors (depending on display card used) Brightness*4: 500 cd/m² (Max.) Contrast Ratio: 5000:1 Viewing Angle: 89° (typ) @ CR>10
Frequency				Horizontal: 15 - 136 kHz Vertical: 23 - 76 Hz
Pixel Clock				25 - 600 MHz (HDMI/DisplayPort)
Viewable Size				1209.60 x 680.40 mm
Input Signal				
	DisplayPort	DisplayPort Connector	Digital RGB	DisplayPort (Up to 4096x2160 (60 Hz), HDCP 1.3/2.2)
	HDMI	HDMI Connector	Digital YUV Digital RGB	HDMI (Up to 4096x2160 (60 Hz), HDCP 1.4/2.2)
AUDIO				
	AUDIO Input	DisplayPort Connector	Digital Audio	PCM 32, 44.1, 48 kHz (16/20/24 bit)
		HDMI Connector	Digital Audio	PCM 32, 44.1, 48 kHz (16/20/24 bit)
	AUDIO Output	Stereo Mini Jack	Analog Audio	Stereo L/R 0.5 Vrms
		HDMI (ARC)*3	Digital Audio	PCM 32, 44.1, 48 kHz (16/20/24 bit)
Speaker Output				Internal Speaker 10 W + 10 W (Stereo)
Control				RS-232C In: 9 Pin D-sub LAN: RJ-45 10 BASE-T/100 BASE-TX Remote IN: Stereo Mini Jack 3.5 mm Ø
USB				Power supply port, 5 V/2 A (max.) Media Player/Firmware update port
Power Supply				2.9 - 1.2 A @ AC 100 - 240 V 50/60 Hz
Power Consumption				Normal operation: Approx. 120 W
Operational Environment				Temperature*1: 0 - 40 °C / 32 - 104 °F Humidity: 20 - 80 % (without condensation) Altitude: 0 - 3000 m (Brightness may decrease with altitude)
Storage Environment				Temperature: –20 - 60 °C / –4 - 140 °F Humidity: 10 - 80 % (without condensation) / 80 % - 3.5 % x (Temp - 40 °C) regarding over 40 °C
Dimension*2				1241.8 (W) x 712.6 (H) x 75.6 (D) mm/48.89 (W) x 28.06 (H) x 2.98 (D) inches (with handle) 1241.8 (W) x 712.6 (H) x 62.6 (D) mm/48.89 (W) x 28.06 (H) x 2.46 (D) inches (without handle)
Weight				19.8 kg (43.7 lbs)
VESA compatible mounting interface				400 mm x 400 mm (M6, 4 Holes)
Power supply for Option Board				12 V/5.5 A
Power supply for Raspberry Pi Compute Module				12 V/1.67 A

NOTE: Technical specifications are subject to change without notice.

*1: When you use Option Board accessories, please contact your supplier for detailed information.
*2: Measurements are of the monitor only and do not include removable parts that protrude.
*3: HDMI1 only.
*4: The Brightness level changes depending on the input settings, picture settings, installation environment, and individual product characteristics.
The overall Brightness decreases as the product ages due to deterioration over time. It does not maintain a permanent brightness level throughout the product’s life.

M651-2

Product Specifications

LCD Module				65”/163.9 cm diagonal Pixel Pitch: 0.372 mm Resolution: 3840 x 2160 Color: Over 1073 million colors (depending on display card used) Brightness*4: 500 cd/m² (Max.) Contrast Ratio: 1200:1 Viewing Angle: 89° (typ) @ CR>10
Frequency				Horizontal: 15 - 136 kHz Vertical: 23 - 76 Hz
Pixel Clock				25 - 600 MHz (HDMI/DisplayPort)
Viewable Size				1428.48 x 803.52 mm
Input Signal				
	DisplayPort	DisplayPort Connector	Digital RGB	DisplayPort (Up to 4096x2160 (60 Hz), HDCP 1.3/2.2)
	HDMI	HDMI Connector	Digital YUV Digital RGB	HDMI (Up to 4096x2160 (60 Hz), HDCP 1.4/2.2)
AUDIO				
	AUDIO Input	DisplayPort Connector	Digital Audio	PCM 32, 44.1, 48 kHz (16/20/24 bit)
		HDMI Connector	Digital Audio	PCM 32, 44.1, 48 kHz (16/20/24 bit)
	AUDIO Output	Stereo Mini Jack	Analog Audio	Stereo L/R 0.5 Vrms
		HDMI (ARC)*3	Digital Audio	PCM 32, 44.1, 48 kHz (16/20/24 bit)
Speaker Output				Internal Speaker 10 W + 10 W (Stereo)
Control				RS-232C In: 9 Pin D-sub LAN: RJ-45 10 BASE-T/100 BASE-TX Remote IN: Stereo Mini Jack 3.5 mm Ø
USB				Power supply port, 5 V/2 A (max.) Media Player/Firmware update port
Power Supply				3.6 - 1.5 A @ AC 100 - 240 V 50/60 Hz
Power Consumption				Normal operation: Approx. 165 W
Operational Environment				Temperature*1: 0 - 40 °C / 32 - 104 °F Humidity: 20 - 80 % (without condensation) Altitude: 0 - 3000 m (Brightness may decrease with altitude)
Storage Environment				Temperature: –20 - 60 °C / –4 - 140 °F Humidity: 10 - 80 % (without condensation) / 80 % - 3.5 % x (Temp - 40 °C) regarding over 40 °C
Dimension*2				1462.3 (W) x 837.3 (H) x 93.2 (D) mm/57.57 (W) x 32.96 (H) x 3.67 (D) inches (with handle) 1462.3 (W) x 837.3 (H) x 68.1 (D) mm/57.57 (W) x 32.96 (H) x 2.68 (D) inches (without handle)
Weight				29.4 kg (64.8 lbs)
VESA compatible mounting interface				400 mm x 400 mm (M8, 4 Holes)
Power supply for Option Board				12 V/5.5 A
Power supply for Raspberry Pi Compute Module				12 V/1.67 A

NOTE: Technical specifications are subject to change without notice.

*1: When you use Option Board accessories, please contact your supplier for detailed information.
*2: Measurements are of the monitor only and do not include removable parts that protrude.
*3: HDMI1 only.
*4: The Brightness level changes depending on the input settings, picture settings, installation environment, and individual product characteristics.
The overall Brightness decreases as the product ages due to deterioration over time. It does not maintain a permanent brightness level throughout the product’s life.

Appendix A Registration Information and Software License

Trademarks

Microsoft® and Windows® are either registered trademarks or trademarks of Microsoft Corporation in the United States and/or other countries.

NEC is a registered trademark of NEC Corporation.

DisplayPort™ and the DisplayPort™ logo are trademarks owned by the Video Electronics Standards Association (VESA®) in the United States and other countries.

MultiSync is a trademark or registered trademark of Sharp NEC Display Solutions, Ltd. in Japan and other countries.

PJLink trademark and logo are trademarks applied for registration or are already registered in Japan, the United States of America and other countries and areas.

The terms HDMI, HDMI High-Definition Multimedia Interface, HDMI Trade Dress and the HDMI Logos are trademarks or registered trademarks of HDMI Licensing Administrator, Inc.

Blu-ray is a trademark of Blu-ray Disc Association.

CRESTRON and CRESTRON ROOMVIEW are trademarks or registered trademarks of Crestron Electronics, Inc. in the United States and other countries.

Intel and the Intel logo are trademarks of Intel Corporation or its subsidiaries.

All other brands and product names are trademarks or registered trademarks of their respective owners.

[Notice] About the MPEG-4 AVC, MPEG-4 Visual license included in this product

1. MPEG AVC

THIS PRODUCT IS LICENSED UNDER THE AVC PATENT PORTFOLIO LICENSE FOR THE PERSONAL USE OF A CONSUMER OR OTHER USES IN WHICH IT DOES NOT RECEIVE REMUNERATION TO (i) ENCODE VIDEO IN COMPLIANCE WITH THE AVC STANDARD (“AVC VIDEO”) AND/OR (ii) DECODE AVC VIDEO THAT WAS ENCODED BY A CONSUMER ENGAGED IN A PERSONAL ACTIVITY AND/OR WAS OBTAINED FROM A VIDEO PROVIDER LICENSED TO PROVIDE AVC VIDEO. NO LICENSE IS GRANTED OR SHALL BE IMPLIED FOR ANY OTHER USE. ADDITIONAL INFORMATION MAY BE OBTAINED FROM MPEG LA, L.L.C. SEE HTTP://WWW.MPEGLA.COM

2. MPEG-4 Visual

THIS PRODUCT IS LICENSED UNDER THE MPEG-4 VISUAL PATENT PORTFOLIO LICENSE FOR THE PERSONAL AND NON-COMMERCIAL USE OF A CONSUMER FOR (i) ENCODING VIDEO IN COMPLIANCE WITH THE MPEG-4 VISUAL STANDARD (“MPEG-4 VIDEO”) AND/OR (ii) DECODING MPEG-4 VIDEO THAT WAS ENCODED BY A CONSUMER ENGAGED IN A PERSONAL AND NONCOMMERCIAL ACTIVITY AND/OR WAS OBTAINED FROM A VIDEO PROVIDER LICENSED BY MPEG LA TO PROVIDE MPEG-4 VIDEO. NO LICENSE IS GRANTED OR SHALL BE IMPLIED FOR ANY OTHER USE. ADDITIONAL INFORMATION INCLUDING THAT RELATING TO PROMOTIONAL, INTERNAL AND COMMERCIAL USES AND LICENSING MAY BE OBTAINED FROM MPEG LA, LLC. SEE HTTP://WWW.MPEGLA.COM.

Appendix B External Resources

Additional specification documents and accessories, and optional software applications referenced in this product manual are listed below.

Regional websites

Global: https://www.sharp-nec-displays.com/global/

North America: https://www.sharpnecdisplays.us/

Europe, Russia, Middle East and Africa: https://www.sharpnecdisplays.eu/p/hq/en/home.xhtml

Japan: https://www.sharp-nec-displays.com/jp/

Additional Documentation

“External Control” PDF document

This document defines the communications protocol for externally controlling and querying the monitor via either RS-232C or LAN. The protocol uses encoded binary and requires calculation of checksums, and most functionality in the monitor can be controlled using these commands. A simpler protocol is also available for less demanding applications (see below).

This document is available for download from our website in your region.

A Python programming language based SDK (Software Development Kit) is also available that encapsulates this communications protocol into a Python library for rapid development.

https://github.com/SharpNECDisplaySolutions/necpdsdk

“Projector/Monitor Common ASCII Control Command - Reference Manual” PDF document

This document defines the communications protocol for externally controlling the basic functions of the monitor via LAN using a simple English-like syntax. It is suitable for easy integration into existing control systems. Functionality such as controlling and querying the power state, video inputs, volume, and status is available. The protocol uses ASCII encoding and doesn’t require calculation of checksums.

This document is available for download from our website in your region.

“Raspberry Pi Compute Module - Setup Guide” PDF document

Raspberry Pi

This document describes the features, installation, connectivity, and configuration of the Raspberry Pi Compute Module, which is an optional component available for this model. The required DS1-IF20CE Compute Module Interface Board and Raspberry Pi Compute Module are available separately. Please contact an authorized NEC dealer or visit our website in your region for purchase information and availability.

This document can be downloaded from:

https://www.sharp-nec-displays.com/dl/en/manual/raspberrypi/

Software

Software is available for download on our website.

https://www.sharp-nec-displays.com/dl/en/dp_soft/lineup.html

Display Wall Calibrator software

This software provides advanced video wall configuration and accurate color matching by calibrating the monitors using an external color sensor. It is useful when setting up multi-monitor installations - such as a video wall - to achieve the best possible brightness and color matching between screens and configuring settings applicable to the video wall. The software, available for Microsoft Windows and macOS, is available for purchase and may require the use of a supported external color sensor. Please contact an authorized dealer or see our website in your region for purchase information and availability.

NaViSet Administrator software

This free software is an advanced and powerful network based control, monitoring and asset management system for NEC monitors and projectors. The software is available for Microsoft Windows and macOS.

The latest version of the NaViSet Administrator software is available on our website.

Hardware

MDSVSENSOR 3 USB Color Sensor

This customized X-Rite color sensor can be used with the Display Wall Calibrator software listed above. Please contact an authorized dealer or see our website in your region for purchase information and availability.

Appendix C OSD Controls List

This Chapter Includes

- ⇨ “INPUT” on page 76
- ⇨ “PICTURE” on page 78
- ⇨ “AUDIO” on page 81
- ⇨ “SCHEDULE” on page 82
- ⇨ “SLOT” on page 83
- ⇨ “NETWORK” on page 85
- ⇨ “PROTECT” on page 86
- ⇨ “SYSTEM” on page 89

Default values can be provided on request.

INPUT

INPUT MENU			
INPUT SELECT*5			
	DisplayPort		Selects the input signals source.
	HDMI1		
	HDMI2		
	Media Player		
	COMPUTE MODULE*4		
	OPTION*1		
INPUT SETTINGS			
	INPUT NAME*5		To rename the input: 1. Highlight the name field. 2. Press SET on the IR remote control to activate the field. • Use the -/+ buttons to navigate to the character you want to change. • Press the ▲/▼ buttons to cycle through the available characters (A-Z, 0-9, special characters, and space). • Press the SET button when on a letter to switch between uppercase and lowercase. 3. Press EXIT to save the name and exit the name field. Custom names with a maximum of 14 characters, including spaces, can be set. The characters can be a mix of letters (A-Z), numbers (0-9), and some symbols.
	NAME RESET*5		Returns the current input name to its factory default. Highlight [PROCEED] and press SET on the remote control to reset the input name. Options are: PROCEED / CANCEL.
	AUTO INPUT CHANGE*2		When enabled, this option can detect and change inputs when a signal is applied or lost. Allows for customization of the input priority. NOTE: This option is unavailable when these OSD menu options are enabled: • [HUMAN SENSING] is [ENABLED] in the [AUTO DIMMING] settings in the [CONTROL] menu.
		NONE	The monitor does not search for video signal on the other input connections. If video signal is lost on the current input, or if the monitor is manually switched to an input that does not have video signal, the screen will go black and the LED will flash green. If [POWER SAVE] is enabled, the monitor will enter power saving mode after the period of time set for [POWER SAVE] has passed.
		FIRST DETECT*3	The monitor does not search for a video signal on the other input connections while the current input has a video signal. If the current input connection does not have video signal present, the monitor will search for video signal on the other video input connections. If a video signal is found, the monitor will switch from the current input to the input with the active video source automatically.
		LAST DETECT*3	The monitor actively searches for a video signal on the other input connections, even while the current video signal is present. When a new video signal source is applied to another input connection, the monitor automatically switches to the newly found video source. If the video signal is lost on the current input connection, the monitor will search for video signal on the other video input connections. If a video signal is found, the monitor will switch from the current input to the input with the active video source automatically.
		CUSTOM DETECT	The monitor only searches for video signal on the inputs selected for the priority numbers. If the signal is lost, the monitor searches for signal in the priority order and automatically switches to the highest priority input it finds with an active video signal. The monitor actively searches these inputs. If the current signal input is not Priority 1 and a new signal is applied to the input assigned to Priority 1, the monitor will automatically switch to the higher priority input. NOTE: • [Media Player] will only work when a USB storage device is connected.

INPUT MENU		
ADVANCED*5		
	INPUT SIGNAL SETTINGS	
	DisplayPort	
		BIT RATE	Sets the bit rate of the DisplayPort signal. If the image is unstable or picture noise occurs, please try the other settings. Options are: HBR/HBR2.
	HDMI	Sets the HDMI mode. MODE1: Max resolution is 3840 x 2160 (30 Hz). MODE2: Max resolution is 3840 x 2160 (60 Hz), HDCP 2.2, or HDR.
	Media Player	Configures the autoplay settings for the Media Player. OFF: Does not automatically play any files. Photo: Automatically plays picture (still image) files. Music: Automatically plays music files. Movie: Automatically plays video files. When using any setting other than [OFF], play files in the USB storage device's "AUTO_PLAY" folder automatically in the following cases: - When the power is turned off and on with [Media Player] set as the input signal. - When the [INPUT SELECT] is [Media Player]. NOTE: • Playback is in order of file name; in priority first numerically (ascending order), then alphabetically (ascending order). • Using this setting in conjunction with [AUTO INPUT CHANGE], the system switches to "Media Player" and automatically plays the selected file when the input signal is lost.
	OVERSCAN*3	Some video formats may require different scanning modes in order to best show the image. NOTE: This function is not available when [MOTION] in [SCREEN SAVER] is active.
		ON	The image is scaled to best fit the screen without changing the aspect ratio. Some images will have cropped edges. Approximately 95 % of the image will be shown on the screen.
		OFF	The whole image is displayed within the screen area. This setting may cause distorted image at the edges. NOTE: When you use a computer with HDMI out, please set [OFF].
		AUTO	Image size is set automatically.
	VIDEO RANGE*3	Adjust the gradation range to be shown according to the video signal to improve the whiteout and blackout of the image. NOTE: This function is available only in [HDMI] or [DisplayPort] or [OPTION] and is selected at [INPUT SIGNAL].
		RAW SIGNAL	For computer settings. Show all input signals of 0-255 gray levels.
		EXPANDED SIGNAL	For audio-visual equipment settings. Expands the input signals from 16-235 gray levels to 0-255 gray levels.
		AUTO	Automatically sets input signals by adjusting connected equipment.
	CEC	Provides CEC (Consumer Electronics Control) compatible media players, connected via HDMI, the ability to communicate and allows limited control between the device and the monitor. Only available for HDMI inputs.
		CEC	When [MODE1] or [MODE2] is selected, the following functions are automatically activated: - When a connected HDMI-CEC media device plays, the monitor will turn on and/or change to the HDMI input with the connected media device. - The monitor's wireless remote control can be used to control some of the media player device functions. When [MODE1] is selected, the wireless remote control CEC functions are: 1 (⏮), 2 (▶), 3 (⏭), 5 (■), 6 (⏸), ENT, EXIT, ▲, ▼, +, –, MUTE, VOL+, VOL–. When [MODE2] is selected, the wireless remote control CEC functions are: 0 to 9 and – in the keypad, ENT, EXIT, ▲, ▼, +, –, GUIDE, MUTE, SET/POINT ZOOM, VOL+, VOL–, CH/ZOOM+, CH/ZOOM–. Depending on the type of the connected device, the CEC functions may not work as described. Not all manufacturers provide the same level of CEC integration and control, or they may only provide support for their products.

INPUT MENU			
		AUTO TURN OFF	The HDMI-CEC compatible device goes into standby at the same time as the monitor when the STANDBY button is pressed on the remote control, or when the ⏻ button is pressed on the monitor. NOTE: The connected HDMI-CEC compatible device may not go into standby if it is recording.
		AUDIO RECEIVER	When [ENABLE] is selected, the internal speaker is muted and connected audio equipment with ARC function outputs the sound. When [DISABLE] is selected, connected audio equipment with ARC function is muted and the internal speaker outputs the sound. NOTE: • It may take a while to output the sound when changing [AUDIO RECEIVER] settings; but this is not a failure of the monitor.
		SEARCH DEVICE	Searches the HDMI input for a connected HDMI-CEC compatible device. If a device is found, the connected HDMI-CEC compatible device's type and registered device name are shown. After detecting HDMI-CEC compatible devices, you can switch the device input by selecting the device. NOTE: In some situations, the entire text of the registered name and device type may not fully show. In this case, please note the device by both the device type and registered name connected to an input.
	SIGNAL FORMAT		Selects the color space setting and RBG for the HDMI/DisplayPort signal.
	SIDE BORDER COLOR*3		Adjusts the color of the borders that show when an image does not fill the entire screen. Press the + button to make the borders lighter, the level can be increased until the color is white. Press the – button to make the borders darker, the level can be decreased until the color is black.
	RESET		Resets all input menu settings back to factory settings except for [INPUT NAME] and [AUTO INPUT CHANGE].

*1: This function depends on which Option Board you are using. This function is only available when Option Board is installed.
*2: Depending on the device, it may not be detected correctly.
*3: Except for Media Player.
*4: This function is only available when Raspberry Pi Compute Module Interface Board and Raspberry Pi Compute Module are installed. See page 73.
*5: This option is shown and enables for setting only when [LANDSCAPE] is set to [OSD ROTATION].

PICTURE

PICTURE MENU		
PICTURE MODE		Provides pre-configured picture settings suitable for various environments where this device may be used, or customize settings to viewer preference.
	NATIVE	Standard setting.
	RETAIL	Bright, vivid colors ideal for advertising and branding.
	CONFERENCING	Lower color temperature and optimized for natural human complexions.
	HIGHBRIGHT	Maximum backlight brightness with higher color temperature for brighter ambient environments.
	TRANSPORTATION	Maximum backlight brightness with high contrast to read text under all conditions.
	CUSTOM	Customizable settings.
BACKLIGHT		Adjusts the overall image and background brightness. Press [+] or [–] to adjust. NOTE: When [MODE1] or [MODE2] is selected in [AMBIENT LIGHT SENSING] at [ADVANCED], this function cannot be changed.
BACKLIGHT DIMMING*4		Automatically adjusts each of the clusters of the backlight of the LCD independently, according to the input signal.
VIDEO BLACK LEVEL		Adjusts the black luminance.

PICTURE MENU	
GAMMA*4	Select a monitor gamma correction for best picture quality. Selection depends on the desired usage.
NATIVE	Gamma correction is handled by the LCD panel.
2.2	Typical monitor gamma for use with a computer.
2.4	Typical gamma settings for use with videos, such as DVDs and Blu-rays.
S GAMMA	Special gamma for certain types of movies. Raises the light parts and lowers the dark parts of the image (S-Curve).
DICOM SIM.	DICOM GSDF curve simulated for LCD type. NOTE: Do not use for diagnostic purposes.
PROGRAMMABLE1, 2, 3	A programmable gamma curve can be loaded using optional our software.
COLOR	
COLOR*4	Adjusts the color saturation of the screen. Press + or – button to adjust.
COLOR TEMP:	Adjusts the color temperature of the entire screen. A low color temperature will result in a reddish screen. A high color temperature will make the screen bluish. If a temperature needs further adjustment, the individual R/G/B/ levels of the white point can be adjusted. To adjust the R/G/B levels, set [CUSTOM] as [COLOR TEMP] selection. NOTE: When [PROGRAMMABLE1], [PROGRAMMABLE2] or [PROGRAMMABLE3] is selected in [GAMMA], this function cannot be changed.
COLOR CONTROL	Adjusts the hue of the Red, Yellow, Green, Cyan, Blue and Magenta colors individually. For example, you can change red to yellow or purple.
CONTRAST*4	Adjusts the image brightness in relationship to the input signal. Press + or – button to adjust.
ADVANCED*4	
HDR MODE	When the monitor detects an HDR signal, you can select preferred gamma correction from [LOW], [MIDDLE] or [HIGH].
SHARPNESS	Adjusts the crispness of the image. Press + or – button to adjust. NOTE: Depending on the combination of the input resolution and the [ASPECT] setting, this function may not work.
ASPECT	Select the aspect ratio of the screen image. NOTE: • If you change [H POS] and [V POS] settings with a reduced image, the image will not be changed. • The [ASPECT] automatically changes to [FULL] when the [SCREEN SAVER] starts. When the [SCREEN SAVER] stops, the [ASPECT] returns to its previous setting. • This function is not available when [MOTION] in [SCREEN SAVER] is active. • [ZOOM] is not available for an image with an input resolution of 4K.
NORMAL	Shows the aspect ratio as it is sent from the source.
FULL	Fills the entire screen.
WIDE	Expands a 16:9 letterbox signal to fill the entire screen.
1:1	Shows the image in a 1 by 1 Pixel format. (If the input resolution is higher than the recommended resolution, the image will be scaled down to fit the screen).
ZOOM	Expands/reduces the image. NOTE: The areas of the expanded image that are outside of the active screen area are not shown. The reduced image may have some image degradation.
ZOOM	Maintains the aspect ratio while zooming.
HZOOM	Horizontal zoom value.
VZOOM	Vertical zoom value.
H POS	Horizontal position.
V POS	Vertical position.
ADAPTIVE CONTRAST*2	Sets the level of adjustment for dynamic contrast. If [HIGH] is set, the image is shown clearly but it makes brightness unstable due to the wide gap in contrast variation.

PICTURE MENU		
	AUTO DIMMING	Adjusts the backlight of the LCD automatically depending on the amount of ambient light.
	AUTO BRIGHTNESS	Adjusts the brightness level according to the input signal. NOTE: When [MODE1] or [MODE2] is selected in [AMBIENT LIGHT SENSING] at [ADVANCED], this function cannot be changed.
	AMBIENT LIGHT SENSING*1	The backlight of the LCD panel can be set to increase or decrease depending on the amount of ambient light within the room. If the room is bright, the monitor becomes correspondingly bright. If the room is dim, then the monitor will dim accordingly. The purpose of this function is to make the viewing experience more comfortable to the eye in a variety of lighting conditions. The ambient parameter setting: [AMBIENT LIGHT SENSING] in OSD, select [MODE1] or [MODE2] and set [ILLUMINANCE] and [BACKLIGHT]. IN BRIGHT: Setting to use in a bright room. ILLUMINANCE - The illuminance level in a bright room. BACKLIGHT - The maximum level of backlight in a bright room. IN DARK: Setting to use in a dim room. ILLUMINANCE - The illuminance level in a dim room. BACKLIGHT - The minimum level of backlight in a dim room. STATUS: Shows the current setting level of [ILLUMINANCE] and [BACKLIGHT]. When the [AMBIENT LIGHT SENSING] is enabled the Backlight level of the screen changes automatically according to the lighting conditions of the room (see figure below). 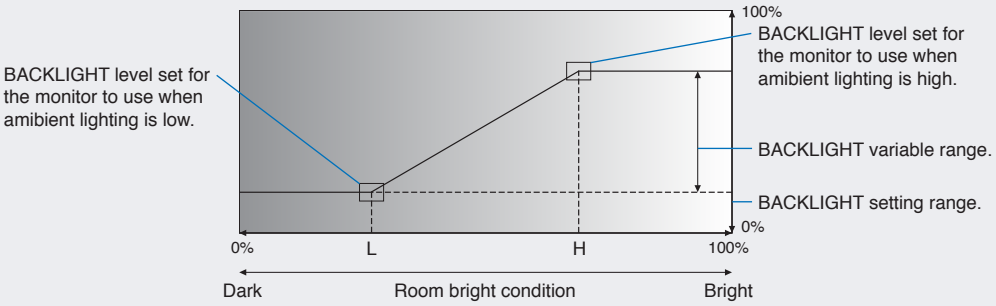 L - ILLUMINANCE level set for the monitor to use when ambient lighting is low. H - ILLUMINANCE level set for the monitor to use when ambient lighting is high. NOTE: • When setting to [MODE1] or [MODE2], [BACKLIGHT] cannot be changed. • Setting to [MODE2] makes the background brightness even darker than [MODE1] when the backlight level is [0/100]. • When [ON] is selected in [AUTO BRIGHTNESS] at [ADVANCED], this function cannot be changed. • Do not cover the optional sensor unit when [AMBIENT LIGHT SENSING] is enabled. [AMBIENT LIGHT SENSING] is enabled when it is set to [MODE1] or [MODE2].
	HUMAN SENSING*1	Automatically adjusts the backlight and volume levels based on whether or not a human presence is detected in front of the monitor. NOTE: Human sensing is automatically disabled if [AUTO INPUT CHANGE] is set while [HUMAN SENSING] is active. [POWER SAVE] is disabled when [AUTO OFF] or [CUSTOM] is selected in [HUMAN SENSING].
	DISABLE	Human sensing function is off.
	AUTO OFF	The monitor's backlight automatically turns off, and the volume mutes when no human presence is detected during the period set at [WAITING TIME]. When a person is near the monitor again, the monitor will automatically return to normal mode.
	CUSTOM	The monitor's input signal, backlight and volume levels automatically shift to the setting at [INPUT SELECT], [BACKLIGHT] and [VOLUME] when no human presence is detected during the period set at [WAITING TIME]. When a person is near the monitor again, the monitor will automatically return the backlight and volume to normal levels and reproduce the input signal selected for [INPUT SELECT].

PICTURE MENU			
	TILE MATRIX*3		Allows one image to be expanded and shown over multiple screens (up to 100) through a distribution amplifier. This option is for configuring the TILE MATRIX settings. NOTE: • Low resolution is not suitable for tiling to a large number of monitors. • A distribution amplifier is required. • If [ZOOM] is selected in [ASPECT], the setting changes to [FULL] when the tile matrix is activated. When the tile matrix is deactivated, the [ASPECT] setting shifts back to [ZOOM]. • While the tile matrix is active, changing the aspect setting to [ZOOM] or changing the zoom level does not affect the picture. When the tile matrix deactivates, any settings that changed while the tile matrix was active are immediately applied. • If Media Player contents are played while [TILE MATRIX] is active, the image play timing might have a gap within monitors.
		H MONITORS	Number of monitors arranged horizontally.
		V MONITORS	Number of monitors arranged vertically.
		POSITION	Select the section of the tiled image to view on the current monitor.
		TILE COMP	Adjusts the image to compensate for the gap between monitors. When activated, the image size and position can be adjusted by pressing the + or – button on the remote control.
		CONFIRM SETTINGS	Starts the Tile Matrix.
	IMAGE FLIP		Rotates the image 180 degrees.
	RESET		Resets all picture menu settings back to factory settings except for [PICTURE MODE].

*1: The function is available only when connecting the optional sensor unit.
*2: Except for RGB signal.
*3: Except for Media Player.
*4: This option is shown and enables for setting only when [LANDSCAPE] is set to [OSD ROTATION].

AUDIO

AUDIO MENU		
AUDIO MODE		Provides pre-configured audio settings suitable for various environments where this device may be used, or customize settings to viewer preference.
	NATIVE	Standard setting.
	RETAIL	Surround sound for clarity of audio in retail stores.
	CONFERENCING	Optimized settings for clarity of audio in conference rooms.
	HIGHBRIGHT	Lowest volume level in order to focus on the visual message (audio is mute).
	TRANSPORTATION	Lowest volume level in order to avoid disturbance in public spaces (audio is mute).
	CUSTOM	Customizable settings.
VOLUME*1		Increase or decrease output volume level.
BALANCE*1		Select [STEREO] or [MONO] for the audio output.
	STEREO/MONO	STEREO: Independent audio channels for routing audio signal. Sound balance between the left and right speakers can be adjusted. MONO: Audio signals are routed through a single audio channel. Balance cannot be adjusted and the slider will be unavailable.
	BALANCE	Press the + button to move the audio signal to the right. Press the – button to move the audio signal to the left. NOTE: This function is not available when [MONO] is selected.
	SURROUND	Artificially produces surround sound audio.

AUDIO MENU		
EQUALIZER*1		
	TREBLE	Accentuates or reduces the high frequency range of audio signals. Press the + button to increase [TREBLE]. Press the – button to decrease [TREBLE].
	BASS	Accentuates or reduces the low frequency sound. Press the + button to increase [BASS]. Press the – button to decrease [BASS].
ADVANCED*1		
	LINE OUT	Selecting [VARIABLE] enables control of the line out level with the VOLUME button on the remote control or monitor control panel.
	AUDIO DELAY	
	AUDIO DELAY	Select this option if there is a noticeable delay between the video image and the audio signal output. When this option is on, the audio signal can be delayed between 0 to 100 milliseconds. This allows delays in the video, that may occur due to video processing such as DEINTERLACE, to be matched by an equal delay in the audio signal to avoid lip-sync errors.
	DELAY TIME	
	INTERNAL SPEAKER	Selecting [OFF] stops internal speakers output.
	RESET	Resets all audio menu settings back to factory settings except for [AUDIO MODE].

*1: This option is shown and enables for setting only when [LANDSCAPE] is set to [OSD ROTATION].

SCHEDULE

SCHEDULE MENU		
SCHEDULE INFORMATION		Creates a working schedule for the monitor (see page 44). Press the ▲, ▼, +, – buttons to navigate and change the schedule settings. Press the SET/POINT ZOOM button on the remote control or Input change buttons on the monitor to select settings. NOTE: • The [DATE & TIME] needs to be set before adding schedules. • Schedules you configure are saved when exiting the [SCHEDULE INFORMATION] window. • If multiple schedules are set to start at the same time, the conflicting schedule with the highest number is given priority. • Schedules will not run when the [OFF TIMER] is set to [ON]. • Schedules do not run while the [SCHEDULE INFORMATION] menu is open.
	SETTINGS	Highlight the number and press SET/POINT ZOOM button to activate the schedule. The box next to the number has an outline when the schedule is enabled. Up to 14 schedules can be created and enabled. Press the + or – button to cycle through schedule numbers.
	POWER	Sets the monitor's power state for the schedule. Select [ON] if you want the schedule to turn the monitor on at the specified time. Select [OFF] if you want the schedule to turn the monitor off at the specified time.
	TIME	Set the start time for the schedule. NOTE: Fill in both fields for the TIME setting. If either field shows [--], the schedule does not run.
	INPUT	Select which video input to use for the schedule. To keep the active input when the schedule starts, make sure the setting is [--]. If you do select a specific input, set [ON] at [POWER].
	DATE	
	YEAR	Select this option if the schedule is only going to run on one day or it is an irregular schedule.
	MONTH	
	DAY	
	EVERY WEEK	Select this option to have the schedule repeat every week.
OFF TIMER		Powers off the monitor after the time period shown next to the slider. Press the + or – button on the remote control to adjust the timer from 1 to 24 hours. NOTE: Schedules do not run when the [OFF TIMER] is set to [ON].
RESET		Resets all schedule menu settings back to factory setting, except for [OFF TIMER].

SLOT

SLOT MENU		
ACTIVE SLOT		Sets the active Option Board slot. NOTE: Only the selected input will work.
OPTION*1		Configure settings for a connected Option Board.
	POWER CONTROL	
		POWER SUPPLY	Controls power to an Option Board. Select [ON] then press SET on the remote control to power on the device. Select [OFF] then press SET on the remote control to power off the device. NOTE: The option that is highlighted under [POWER SUPPLY] when you open the [POWER CONTROL] menu indicates the current power status. If [YES] is highlighted, the power is on. If [NO] is highlighted, the power is off.
		POWER BUTTON	Allows the same operation as the power button on the installed Option Board.
		FORCE SHUTDOWN	Press [YES] to force a shutdown of the installed Option Board. NOTE: Please use this function only when the operating system cannot be shut down manually.
		RESET	Press [YES] to force a shutdown and restart of the Option Board when it does not respond to shutdown using the [POWER BUTTON] or [FORCE SHUTDOWN] function. NOTE: This function may corrupt data files on the Option Board or data files on a storage device connected to an installed Option Board. Please only use this function when [POWER BUTTON] and [FORCE SHUTDOWN] cannot be carried out.
		Connection Status*3	Shows the connection status of an Option Board. If the status is not “Connected” then a device is not installed.
		Power Status*3	Shows the operating status of the installed Option Board.
		Module*3	Shows information about the installed Option Board.
	POWER SETTING*5		
		AUTO POWER UP	The installed Option Board will be turned on automatically when the monitor power is turned on.
		AUTO SHUTDOWN*2, *4	The installed Option Board is turned off when the monitor is switched into standby mode.
		POWER SUPPLY OFF DELAY	When [OFF] is selected at [SLOT POWER], this sets the time delay after [AUTO SHUTDOWN] is executed until the power to the Option Board is turned off.
		AUTO DISPLAY OFF	Allows to the monitor switch into the same status when the installed device goes into standby or power save mode.
		OFF WARNING	Shows a warning, when shutting down the power to the Option Board, that the device should be turned off from within the OS of the device. This message cannot be changed. This function is available when [POWER SUPPLY] is [OFF].
COMPUTE MODULE		Configure settings for a Raspberry Pi Compute Module Interface Board and Raspberry Pi Compute Module.
	POWER CONTROL	
		POWER SUPPLY	Controls power to the Compute Module. Select [ON] then press SET on the remote control to power on the device. Select [OFF] then press SET on the remote control to power off the device. NOTE: The option that is highlighted under [POWER SUPPLY] when you open the [POWER CONTROL] menu indicates the current power status. If [YES] is highlighted, the power is on. If [NO] is highlighted, the power is off.
		POWER BUTTON	Performs a normal shut down of the Compute Module.
		RESET	Press [YES] to force a shutdown and restart of the Compute Module when it does not respond to shutdown using the [POWER BUTTON] function. NOTE: Press SET to force a shutdown and restart of the Compute Module when it does not respond to shutdown using the [POWER BUTTON] function.
		Connection Status	Shows the connection status of a Compute Module. If the status is not “Connected” then a device is not installed.
		Power Status	Shows the operating status of the Compute Module.
		Module	Shows information about the Compute Module Interface Board.

SLOT MENU			
	POWER SETTING		
		AUTO POWER UP	The Compute Module will be turned on automatically when the monitor power is turned on.
		AUTO SHUTDOWN	The Compute Module is turned off when the monitor switches into standby mode.
		POWER SUPPLY OFF DELAY	This sets the time delay after the Shutdown Signal is set until the power to the Compute Module is turned off. Configure this to allow adequate time for any software to shutdown safely.
		AUTO DISPLAY OFF	When [DISABLE] is selected, automatically plays any pictures or videos in the selected folder when the monitor is turned on with [COMPUTE MODULE] as the selected input.
		OFF WARNING	Shows a warning, when shutting down the power to the Compute Module, that the device should be turned off from within the OS of the device. This message cannot be changed. This function is available when [POWER SUPPLY] is [OFF].
	ADVANCE SETTING		
		SHUTDOWN SIGNAL	Enables or disables the use of GPIO 23 to signal that power to the Compute Module will be shutting down.
		IR SIGNAL	Enables or disables the forwarding of remote control signals.
		MONITOR CONTROL	Enables or disables the internal serial connection between the monitor and the Compute Module.
		WDT	Enables or disables the monitor's built-in Watchdog Timer function for the Compute Module. When enabled, the monitor will expect to receive a periodic reset command from the Compute Module via the internal UART. If the command isn't received for three consecutive timeout periods, the monitor will restart the Compute Module.
			START UP TIME	Sets the time delay for when the monitor should start receiving WDT reset commands after the Compute Module powers up.
			PERIOD TIME	Sets the maximum amount of time within which the monitor must receive WDT reset commands from the Compute Module.
SLOT POWER			Allows the monitor to supply power to an Option Board slot during power save mode or standby mode. [AUTO]: Power is continuously supplied to the Option Board slot, even during power save and standby modes. Power to the Option Board slot stops during power save and standby modes, when there is no installed device. [ON]: Power is continuously supplied to the Option Board slot, even during power save and standby modes. [OFF]: Power to the Option Board slot stops during power save and standby modes. NOTE: If the option board is a computer, please set [SLOT POWER] to [AUTO] or [ON].
RESET*5			Resets all slot menu settings back to factory setting, except for [SLOT POWER].

*1: This function depends on which Option Board installed in the monitor. When changing the setting, turn the monitor's main power.
*2: This function depends on which Option Board you are using. This function is only available when Option Board is installed.
*3: Some Option Boards may not show it correctly.
*4: If the option board is a computer, please also check the computer's shutdown settings.
*5: This option is shown and enables for setting only when [LANDSCAPE] is set to [OSD ROTATION].

NETWORK

NETWORK MENU		
NETWORK INFORMATION		Configures the monitor's network settings either automatically or manually.
	IP SETTING	When [AUTO] is selected, the IP address is automatically obtained from the DHCP server. When [MANUAL] is selected, the network settings must be entered manually. Contact the Network Administrator for this information. NOTE: Consult your network administrator for the IP address when [AUTO] is selected for [IP SETTING].
	IP ADDRESS	Set the IP address for the monitor connected to the network when [MANUAL] is selected for [IP SETTING].
	SUBNET MASK	Set the subnet mask data for the monitor connected to the network when [MANUAL] is selected for [IP SETTING].
	DEFAULT GATEWAY	Set the default gateway for the monitor connected to the network when [MANUAL] is selected for [IP SETTING]. NOTE: Enter [0.0.0.0] to delete the setting.
	DNS	Set the IP addresses of DNS servers. [AUTO]: The DHCP server which is connected to the monitor will automatically assign its IP address. [MANUAL]: Manually enter the IP address of the DNS server which is connected to the monitor. NOTE: Consult your network administrator for the IP address when [AUTO] is selected for [DNS].
	DNS PRIMARY	Enter the primary DNS server settings of the network connected to the monitor. NOTE: Enter [0.0.0.0] to delete the setting.
	DNS SECONDARY	Enter the secondary DNS server settings of the network connected to the monitor. NOTE: Enter [0.0.0.0] to delete the setting.
	MAC ADDRESS	Shows the monitor's [MAC ADDRESS].
	EXECUTE	Executes the network information settings.
NETWORK SECURITY*1		Individually enable or disable the networking component for monitor functions. NOTE: Please set [DISPLAY] to [ENABLE] when updating the firmware revision via the network.
	DISPLAY	Enables or disables the network function for controlling the monitor remotely. When disabled, these functions do not work: External Control, Mail, HTTP server, SNMP, Crestron, AMX, PJLink.
	COMPUTE MODULE	Enables or disables the network function for the Compute Module Interface Board only.
	APPLY	Apply the network security settings.
PING*1		Confirm successful connection with the network by communicating with a preset IP address.
	IP ADDRESS	Sets an [IP ADDRESS] for sending [PING].
	EXECUTE	Checks a reply can be sent to the monitor or not from the [IP ADDRESS] by sending [PING].
RESET*1		Resets all network menu settings back to factory setting, except for [NETWORK INFORMATION] and [PING].

*1: This option is shown and enables for setting only when [LANDSCAPE] is set to [OSD ROTATION].

PROTECT

PROTECT MENU	
POWER SAVE SETTINGS*1	
POWER SAVE	Enables or disables the monitor entering power saving mode. When [ENABLE] is selected, the monitor goes into power saving mode after the period of time has passed with no input signal detected or signal loss has occurred. You can set the power saving condition in [MODE]. When the monitor is in power saving mode, the LED power indicator will change color. Refer to the Power indicator table (see page 65). When [DISABLE] is selected, the monitor doesn't go into power saving mode. The monitor will enter the state selected for [MODE] in the following condition: The monitor is powered off by pressing the main power switch or POWER ON button on the remote control, [POWER] in [SCHEDULE INFORMATION], or by an external control. Please refer to the monitor's specifications (see "M431-2" on page 68, "M501-2" on page 69, "M551-2" on page 70 and "M651-2" on page 71) for power consumption information. NOTE: • When the monitor is connected to a computer, the computer's display adapter may not stop sending digital data even though there is no image on-screen. If this occurs the monitor will not switch into standby mode. • The [POWER SAVE] function is disabled when [AUTO OFF] is turned on in the SCHEDULE menu, or when [HUMAN SENSING]*1 is enabled in the [AUTO DIMMING] section of the CONTROL menu. *1: The function is available only when connecting the optional sensor unit.
TIME SETTING	Sets the amount of time the monitor should wait for input signal before going into power save mode.
MODE	When [LOW POWER] is selected, the monitor cannot detect an input signal from the connected device will not turn on automatically. To turn on the monitor, please press the main power switch on the monitor or the POWER ON button on the remote control, or disconnect and reconnect the device's signal cable. When [NORMAL] is selected, the monitor turns on by detecting an input signal from a connected device. Please set to [NORMAL] when using an external control function (see page 51).
USB	
USB POWER	[ON] allows power supply to USB port when the monitor is in standby mode. NOTE: Power consumption by devices connected to this port depends on the USB devices.
POWER SAVE MESSAGE	Shows a message as the monitor is entering low power mode.
QUICK START	When [ENABLE] is selected, the monitor will quickly return to the [ON] state when a signal is detected. Enabling this option increases standby power consumption.
THERMAL MANAGEMENT	
FAN CONTROL	When [AUTO] is selected, the fans will only turn on when the internal temperature reaches the temperature set at any one of the sensors in this menu. The fans will automatically turn off when the monitor is cooler. When [ON] is selected the fans are always on. The fans cannot be turned off manually. The cooling fan starts when the internal temperature exceeds the temperature set or when [FAN CONTROL] is set to [ON].
FAN SPEED	The [FAN SPEED] can be adjusted [LOW] or [HIGH].
DISPLAY	Shows the status of the the internal temperature of the monitor.
INTERNAL TEMPERATURE	Shows the internal temperature of the monitor.
SLOT	Shows the internal temperature of the Option Board.
FAN STATUS	Shows the status of the monitor's internal fan.
INTERNAL TEMPERATURE	Shows the internal temperature of the Option Board.
SYSTEM FAN REQUIREMENT	Show the requirement operation from the Option Board and Compute Module.
OPTION	
COMPUTE MODULE	

PROTECT MENU	
SCREEN SAVER*1	Use the [SCREEN SAVER] function to reduce the risk of Image Persistence. NOTE: • When the screen saver starts, the image aspect is changed to [FULL]. When the screen saver stops, the aspect will return to the current [ASPECT] setting. • The screen saver cannot be selected for a signal input of 4K. • When the [MOTION] is active, [ASPECT] and [OVERSCAN] are not available. • This function will be disabled when activating [TILE MATRIX] or pressing STILL button on the remote control.
MOTION	Slightly expands the screen image to the pre-set zoom level then moves the image in four directions (up, down, right, left) at the pre-set interval. Use the + and – button on the remote control to set the time on the [INTERVAL] slider, and the zoom percentage on the [ZOOM] slider.
POWER ON DELAY*1	Delays the monitor from turning on for the amount of time set when the POWER ON button is pressed.
DELAY TIME	The delay can be set between 0 and 50 seconds.
LINK TO ID	Links the [DELAY TIME] to the monitor's ID. This helps to prevent power surges that may occur if all multiple monitors were to turn on at the same time. The higher the Monitor ID, the longer the delay is before the monitor powers on. For example, if the Monitor ID is 20 and the [DELAY TIME] is 5 seconds, the amount of time that passes between when the POWER ON button is pressed and when the power actually turns on is 95 seconds. NOTE: If the [DELAY TIME] is set to 0 seconds, there will be no extended delay for [LINK TO ID]. The delay time must be 1 second or higher to delay power on.
SECURITY SETTINGS	Requires a password to be entered to use the monitor.
PASSWORD	Input the current password to change the settings in this menu. The default password is 0000.
SECURE MODE	Selects when a security password is required to use the monitor.
START-UP LOCK	The password is required when powering on the monitor.
CONTROL LOCK	The password is required when pressing a button on the display's button panel or remote control.
CHANGE PASSWORD	Allows the security password to be changed. NOTE: The factory preset password is [0000].
CURRENT PASSWORD	Input the current password to change.
NEW PASSWORD	Input a new password.
CONFIRM PASSWORD	Input the new password again to confirm the password change.
LOCK SETTINGS	Prevents the monitor from being controlled by the wireless remote control, the buttons on the monitor, or both. When [ACTIVATE] is selected, all settings are activated. NOTE: • [IR] is a function intended only for the wireless remote control buttons. This function does not lock out access to the buttons on the monitor. • To return to normal operation, press the DISPLAY button on the remote control and hold it down for more than 5 seconds. • To resume user mode, press the ▲ button and the ▼ button on the monitor control panel and hold simultaneously for more than 3 seconds or more.
SELECT	Selects the device, [IR], [KEY] or [KEY & IR].
MODE	Selects the mode [UNLOCK], [ALL LOCK] or [CUSTOM LOCK].
UNLOCK	All buttons are available for normal operation.
ALL LOCK	Locks all buttons.
CUSTOM LOCK	All buttons are locked except for the following buttons, which can be individually set to be locked or unlocked.

PROTECT MENU		
	POWER	Select [UNLOCK] to be able to use the POWER button when all buttons are locked. Select [LOCK] to lock the button.
	VOLUME	When [IR] is selected in [SELECT]: - UNLOCK: Enable to control the volume with the VOL +/– button on the remote control. When [KEY] is selected in [SELECT]: - UNLOCK: Enable to control the volume with the + button and the – button on the monitor. When [KEY & IR] is selected in [SELECT]: - UNLOCK: Enable to control the volume with the VOL +/– button on the remote control and the + button and the – button on the monitor. LOCK: To prevent volume adjustment. When activating the volume lock, the monitor volume will immediately change to the MIN VOL value.
	MIN VOL/MAX VOL	The volume buttons are unlocked and the volume level can only be adjusted within the MIN and MAX range set. VOLUME must be set to [UNLOCK] for this function. NOTE: [MIN VOL] and [MAX VOL] lock only works with embedded speakers and Audio Line Out (3.5 mm connector), but it does not work when [CEC] is set to [MODE1] or [MODE2] and [AUDIO RECEIVER] is set to [ENABLE].
	INPUT	When [IR] is selected in [SELECT]: - UNLOCK: Enable to use the input buttons on the remote control. - LOCK: Lock all input buttons on the remote control. When [KEY] is selected in [SELECT]: - UNLOCK: Enable to use the INPUT/SET button on the monitor. - LOCK: Lock the INPUT/SET button on the monitor. When [KEY & IR] is selected in [SELECT]: - UNLOCK: Enable to use the input buttons on the remote control and the INPUT/SET button on the monitor. - LOCK: Lock all input buttons on the remote control and the INPUT/SET button on the monitor.
	ACTIVATE/DEACTIVATE	Select [ACTIVATE] to activate all settings. To return to normal operation press-and-hold the DISPLAY button for more than 5 seconds.
ALERT MAIL*1		When set to [ON] and the monitor is connected to a network, the monitor can send an email message when an error occurs. The email settings must be configured in the monitor's HTTP server settings for an ALERT MAIL to be sent. See page 57.
RESET*1		Resets all PROTECT MENU settings back to factory setting, except for [POWER ON DELAY] and [SECURITY SETTINGS].

*1: This option is shown and enables for setting only when [LANDSCAPE] is set to [OSD ROTATION].

SYSTEM

SYSTEM MENU	
MONITOR INFORMATION	Shows the model name, serial number and firmware version of the monitor. [CARBON SAVINGS]: Shows the estimated carbon saving information in kg-CO2. The carbon footprint factor in the carbon saving calculation is based on the OECD (2008 Edition). [CARBON USAGE]: Shows the estimated carbon usage information in kg-CO2. This is the arithmetic estimation, not actual measurement value. This estimation is based without any options.
FIRMWARE	Shows the monitor's current firmware version.
MAC ADDRESS	Shows the monitor's MAC ADDRESS.
DATE & TIME	NOTE: If the monitor's main power has been turned off for two weeks, the clock function stops working. In this case, please set the [DATE & TIME] setting again.
YEAR	Sets the current year. Press the + or – button on the remote control to cycle to the current year.
MONTH	Sets the current month. Press the + or – button on the remote control to cycle to the current month.
DAY	Sets the current day of the month. Press the + or – button on the remote control to cycle to the current day.
TIME	Sets the current time. Highlight the hour field, then press the + or – button on the remote control to cycle to the current hour, then repeat this for the minutes field. NOTE: • The monitor's clock is a 24-hour format. • If the monitor is at a location that is currently in Daylight Savings, set the TIME field to what the current time would be when Daylight Savings is not in effect. Then enable the [DAYLIGHT SAVING] function to have the clock automatically adjust to the current time.
CURRENT DATE TIME	Shows the current date and time. This data does not reflect changes to the Date and Time settings until SET is pressed on the remote control.
DAYLIGHT SAVING	Automatically changes the real-time clock to match Daylight Savings hours. NOTE: Set the [DATE & TIME] before enabling the [DAYLIGHT SAVING] setting.
DAYLIGHT SAVING	Automatically adjusts the current time, when Daylight Saving hours are in effect, based on the start and end dates selected in this menu.
BEGIN MONTH / DAY / TIME	Set the month, day and time for when Daylight Saving begins.
END MONTH / DAY / TIME	Set the month, day and time for when Daylight Saving ends.
TIME DIFFERENCE	Set the time difference for the real-time clock adjustment. When Daylight Saving starts, this is the amount of time the real-time clock will be adjusted.
EXTERNAL CONTROL*1	Sets the monitor's ID number, assigns the monitor to groups.
MONITOR ID	Sets the monitor's ID number between 1 and 100. This number is also used by the remote control when in ID mode. NOTE: It is strongly recommended so that the monitor can be individually identified and controlled.
GROUP ID	This function assigns monitors to groups, which gives you the ability to send commands to all monitors, however, only monitors with the matching Group ID perform the command. Group IDs allow specific groups of monitors to be targeted using a single command, providing high-speed parallel operation. It is useful for scenarios such as rapid switching of video inputs or tile matrix configurations within a video wall. The [GROUP ID] function is used only via RS-232C commands from your software or control system. Monitors can be assigned to any of the 10 available Group IDs, labeled A-J. Refer to the External_Control.pdf file (see page 73) for the monitor's command codes.
CONTROL TERMINAL	Selects control terminal, [RS-232C] or [LAN].
LANGUAGE	Select the language used by the OSD.

SYSTEM MENU	
OSD	
OSD TIME*1	Turns off the OSD after a period of inactivity. The preset choices are 10-240 seconds.
OSD POSITION*1	Determines the location where the OSD appears on the screen.
OSD SIZE*1	Change the size of the OSD on the screen.
INFORMATION OSD*1	Selects whether or not to automatically show information about the monitor when it powers on, changes input, or the current input signal changes. The information includes the current input, audio source, aspect ratio, resolution, and refresh rate. The monitor's ID and IP address are also shown unless their setting is OFF. Note that the information OSD is also displayed when pressing the DISPLAY button on the remote control. The remote control function cannot be turned off.
COMMUNICATION INFO.*1	Selects whether or not to show the [IP ADDRESS] when the [INFORMATION OSD] is [ON]. The information is set in [NETWORK INFORMATION] at [NETWORK].
OSD ROTATION	Changes the OSD orientation between landscape and portrait. NOTE: OSD settings in [LANDSCAPE] mode are kept in [PORTRAIT] mode.
LANDSCAPE	Shows the OSD in landscape orientation.
PORTRAIT	Shows the OSD in portrait orientation.
KEY GUIDE*1	Shows the monitor's button controls Key Guide when opening the OSD Menu. The Key Guide is aligned to the monitor's button control panel and does not move if the OSD POSITION changes. It is a visual guide to indicate the position of the buttons so that features can be easily adjusted when not using a remote control.
CLONE SETTING*1	Allows for exporting and importing some of the OSD menu settings between monitors. The settings are saved on a USB storage device (formatted FAT16 or FAT32) connected to the monitor's USB port (See page 31).
ALL INPUT	Select to import the settings for all input terminals. If this option is not selected, the settings are only imported for the current input terminal.
INPUT	Individually select each OSD menu function's settings to import. NOTE: The selection of which settings to copy is reset to default if the monitor's main power is turned off. The [HTTP] option is for copying the monitor's web interface settings. Only settings that are not monitor specific are exported and imported during this process.
PICTURE	
AUDIO	
SCHEDULE	
NETWORK	
PROTECT	
SYSTEM	
HTTP	
COPY START - USB READ	Imports the monitor settings from a connected USB storage device.
COPY START - USB WRITE	Exports the monitor settings to a connected USB storage device.
POWER INDICATOR	Turns on or off the LED that indicates the monitor is powered on and in active mode. The monitor's power LED will not glow when this setting is [OFF].
MUTE SETTING*1	Allows you to mute the monitor's audio and video output. AUDIO: Mutes the audio output when the remote control's MUTE button is pressed. VIDEO: Mutes the video output when the remote control's MUTE button is pressed. AUDIO & VIDEO: Mutes the audio and video output when the remote control's MUTE button is pressed. NOTE: The MUTE setting is released in the following cases: • If you change the [INPUT], turn off/on the main power switch, turn off/on with the ⏻ button on the remote control or the main unit, return from power save, change the [MUTE SETTING], change the [AUDIO MODE], when the volume is changed with the remote control or the main unit key, or when the video signal (resolution/scanning frequency) is changed.
UPDATE FIRMWARE*1	Updates the firmware by connecting the USB storage device (FAT16, FAT32) that stores the FIRMWARE image file (PAC file) to the monitor.
RESET	Resets all system menu settings back to factory setting, except for [LANGUAGE], [OSD ROTATION], [KEY GUIDE] and [DATE & TIME].
FACTORY RESET*1	
RESET	All items are returned to factory shipment state.

*1: This option is shown and enables for setting only when [LANDSCAPE] is set to [OSD ROTATION].

Appendix D Manufacturer's Recycling and Energy Information

This Chapter Includes:

- ⇨ "Disposing of your old NEC product" on page 92
- ⇨ "Energy Saving" on page 92
- ⇨ "WEEE Mark (European Directive 2012/19/EU and amendments)" on page 92

We are strongly committed to environmental protection and sees recycling as one of the company's top priorities in trying to minimize the burden placed on the environment. We are engaged in developing environmentally friendly products, and always strive to help define and comply with the latest independent standards from agencies such as ISO (International Organization for Standardization) and TCO (Swedish Trades Union).

Disposing of your old NEC product

The aim of recycling is to gain an environmental benefit by means of re-use, upgrading, reconditioning or reclamation of material. Dedicated recycling sites ensure that environmentally harmful components are properly handled and securely disposed. To ensure the best recycling of our products, we offer a variety of recycling procedures and gives advice on how to handle the product in an environmentally sensitive way, once it has reached the end of its life.

All required information concerning the disposal of the product and country-specific information on recycling facilities can be found on our following websites:

https://www.sharpnecdisplays.eu/p/greenvision/en/greenvision.xhtml (in Europe)

https://www.sharp-nec-displays.com/jp/ (in Japan)

https://www.sharpnecdisplays.us/ (in USA).

Securing personal information: Personally identifiable information, such as IP addresses, may be saved on the monitor. Before transferring or disposing of the monitor, clear this data by performing the FACTORY RESET function.

Energy Saving

This monitor features an advanced energy saving capability. When a Display Power Management signal is sent to the monitor, the Energy Saving mode is activated. The monitor enters a single Energy Saving mode.

For additional information visit:

https://www.sharpnecdisplays.us/ (in USA)

https://www.sharpnecdisplays.eu/p/hq/en/home.xhtml (in Europe)

https://www.sharp-nec-displays.com/global/index.html (Global)

WEEE Mark (European Directive 2012/19/EU and amendments)

Disposing of your used product: In the European Union

EU-wide legislation as implemented in each Member State requires that used electrical and electronic products carrying the mark (left) must be disposed of separately from normal household waste. This includes monitors and electrical accessories, such as signal cables or power cords. When you dispose of such products, please follow the guidance of your local authority or ask the shop where you purchased the product, or if applicable, follow applicable legislation or agreement you may have. The mark on electrical and electronic products may only apply to the current European Union Member States.

Outside the European Union

If you wish to dispose of used electrical and electronic products outside the European Union, please contact your local authority and ask for the correct method of disposal.

For EU: The crossed-out wheeled bin implies that used batteries should not be put to the general household waste! There is a separate collection system for used batteries, to allow proper treatment and recycling in accordance with legislation.

According to Regulation (EU)2023/1542 and amendments, the battery can't be disposed improperly. The battery shall be separated to collect by local service.

Rev. 1