LS901HD
LS901-4K

Projector
User Guide

IMPORTANT: Please read this User Guide to obtain important information on installing and using your product in a safe manner, as well as registering your product for future service. Warranty information contained in this User Guide will describe your limited coverage from ViewSonic® Corporation, which is also found on our web site at http://www.viewsonic.com in English, or in specific languages using the Regional selection box on our website.

Model No. VS20032 | VS20033
P/N: LS901HD | LS901-4K

Thank you for choosing ViewSonic®

As a world-leading provider of visual solutions, ViewSonic® is dedicated to exceeding the world's expectations for technological evolution, innovation, and simplicity. At ViewSonic®, we believe that our products have the potential to make a positive impact in the world, and we are confident that the ViewSonic® product you have chosen will serve you well.

Once again, thank you for choosing ViewSonic®!

Safety Precautions

Please read the following **Safety Precautions** before you start using the projector.

- Keep this user guide in a safe place for later reference.
- Read all warnings and follow all instructions.
- Allow at least 20“ (50 cm) clearance around the projector to ensure proper ventilation.
- Place the projector in a well-ventilated area. Do not place anything on the projector that prevents heat dissipation.
- Do not place the projector on an uneven or unstable surface. The projector may fall over, causing personal injury or projector malfunction.
- Do not look straight at the projector lens during operation. The intense light beam may damage your eyes.
- Always open the lens shutter or remove the lens cap when the projector lamp is on.
- Do not block the projection lens with any objects when the projector is under operation as this could cause objects to become heated and deformed or even cause a fire.
- The lamp becomes extremely hot during operation. Allow the projector to cool for approximately 45 minutes prior to removing the lamp assembly for replacement.
- Do not use lamps beyond the rated lamp life. Excessive use of lamps beyond the rated life could cause them to break on rare occasions.
- Never replace the lamp assembly or any electronic component unless the projector is unplugged.
- Do not attempt to disassemble the projector. There are dangerous high voltages inside which may cause death if you should come into contact with live parts.
- When moving the projector, be careful not to drop or bump the projector on anything.
- Do not place any heavy objects on the projector or connection cables.
- Do not stand the projector on end vertically. Doing so may cause the projector to fall over, causing personal injury or projector malfunction.
- Avoid exposing the projector to direct sunlight or other sources of sustained heat. Do not install near any heat sources such as radiators, heat registers, stoves, or other devices (including amplifiers) that may increase the temperature of the projector to dangerous levels.

- Do not place liquids near or on the projector. Liquids spilled into the projector may cause it to fail. If the projector does become wet, disconnect it from the power supply and call your local service center to have the projector serviced.
- When the projector is under operation, you may sense some heated air and odor from its ventilation grill. It is a normal operation and not a defect.
- Do not attempt to circumvent the safety provisions of the polarized or grounding-type plug. A polarized plug has two blades with one wider than the other. A grounding-type plug has two blades and a third grounding prong. The wide and third blade are provided for your safety. If the plug does not fit into your outlet, obtain an adapter and do not attempt to force the plug into the outlet.
- When connecting to a power outlet, DO NOT remove the grounding prong. Please ensure grounding prongs are NEVER REMOVED.
- Protect the power cord from being treaded upon or pinched, particularly at the plug, and at the point where it emerges from the projector.
- In some countries, the voltage is NOT stable. This projector is designed to operate safely within a voltage between 100 to 240 volts AC, but could fail if power cuts or surges of ±10 volts occur. In areas where voltage may fluctuate or cut out, it is recommended that you connect your projector through a power stabilizer, surge protector, or uninterruptable power supply (UPS).
- If smoke, an abnormal noise, or a strange odor is present, immediately switch the projector off and call your dealer or ViewSonic®. It is dangerous to continue using the projector.
- Use only attachments/accessories specified by the manufacturer.
- Disconnect the power cord from the AC outlet if the projector is not being used for a long period of time.
- Refer all servicing to qualified service personnel.

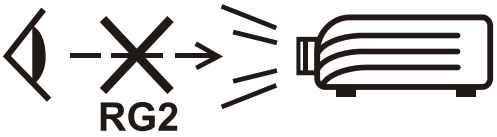

CAUTION: Possibly hazardous optical radiation is emitted from this product. As with any bright light source, do not stare into the beam, RG2 IEC 62471-5:2015. Additional warning against eye exposure for close exposures less than 1 m.

Safety Precautions - Ceiling Mounting

Please read the following **Safety Precautions** before you start using the projector.

If you intend to mount the projector on the ceiling, it is strongly recommended that you use a proper fitting projector ceiling mount kit and that you ensure it is securely and safely installed.

If you use an inappropriate projector ceiling mount kit, there is a safety risk that the projector may fall from the ceiling due to an improper attachment through the use of the wrong gauge or length screws.

WARNING: MOUNT ABOVE THE HEADS OF CHILDREN. The use of a ceiling mount is recommended with this product to place it above the eyes of children.

Laser Caution

This product belongs to CLASS I laser product and complies with IEC 60825-1:2014, EN 60825-1:2014/A11:2021, EN 50689:2021. CLASS 1 CONSUMER LASER PRODUCT EN50689:2021.

IEC 60825-1:2014, EN 60825-1:2014+A11:2021, EN 50689:2021 CLASS 1 CONSUMER LASER PRODUCT RISK GROUP 2, Complies with 21 CFR 1040.10 and 1040.11 except for conformance as a Risk Group 2 LIP as defined in IEC 62471-5:Ed.1.0. For more information see Laser Notice No. 57, dated May 8, 2019.
IEC 60825-1:2014 等級1雷射產品RG2危險等級
IEC 60825-1:2014 1类激光产品RG2危险等级

The above laser cautions are located on the bottom of this device.

- Notice is given to supervise children and to never allow them to stare into the projector beam at any distance from the projector.
- Notice is given to use caution when using the remote control for starting the projector while in front of the projection lens.
- Notice is given to the user to avoid the use of optical aids such as binoculars or telescopes inside the beam.
- Complies with 21 CFR 1040.10 and 1040.11 except for conformance as a Risk Group 2 LIP as defined in IEC 62471-5:Ed. 1.0. For more information see Laser Notice No. 57, dated May 8, 2019.
- IEC 62471-5:2015 RISK GROUP 2

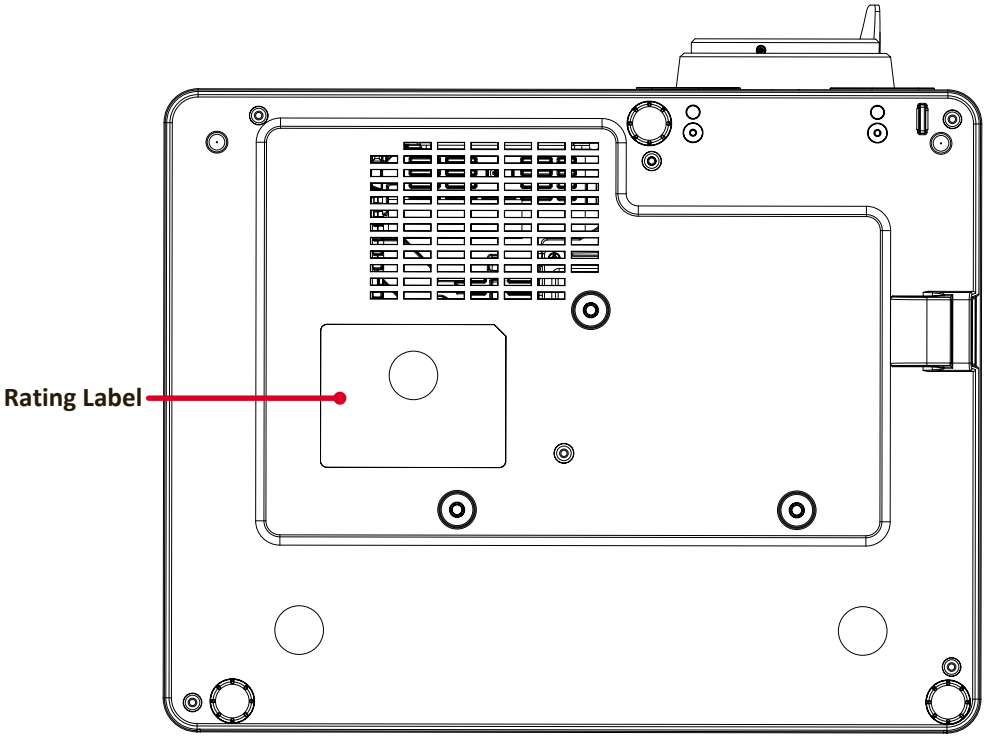

Contents

Safety Precautions 3

Introduction 10

Package Contents 10

LS901HD 10

LS901-4K 11

Product Overview 12

Projector 12

Keypad 13

Indicator Lights 13

I/O Ports 14

Remote Control 16

Initial Setup 20

Choosing a Location - Projection Orientation 20

Projection Dimensions 21

LS901HD 21

Projection Dimensions 23

LS901-4K 23

Mounting the Projector 25

Using the Security Bar 25

Making Connections 26

Connecting to Power 26

Connecting to External Devices 27

HDMI Connection 27

Audio Connection 28

USB and Network Connection 29

RS-232 Connection 30

Using the Projector 31

Turning the Projector On 31

Selecting an Input Source 32

Adjusting the Projected Image 33

Adjusting the Projector’s Height and Projection Angle 33

Adjusting the Focus, Keystone, and Lens Shift 34

Turning the Projector Off 35

Menu Operation 36

On-Screen Display (OSD) Menu 36
Menu Navigation 37
On-Screen Display (OSD) Menu Tree 38
LS901HD 38
LS901-4K 46
Menu Options 53
Display Menu 53
Audio Menu 60
Setup Menu 61
Network Menu 64
Information Menu 66

Appendix 67

Specifications 67
Projector Dimensions 68
Timing Chart 69
LS901HD 69
LS901-4K 73
Troubleshooting 75
LED Indicators 77
Maintenance 78
General Precautions 78
Cleaning the Lens 78
Cleaning the Case 78
Storing the Projector 78

Regulatory and Service Information 79

Compliance Information 79
FCC Compliance Statement 79
Industry Canada Statement 79
CE Conformity for European Countries 80
Declaration of RoHS2 Compliance 81
Indian Restriction of Hazardous Substances 82
Product Disposal at End of Product Life 82
Copyright Information 83
Customer Service 84
Limited Warranty 85
Mexico Limited Warranty 88

Introduction

Package Contents

LS901HD

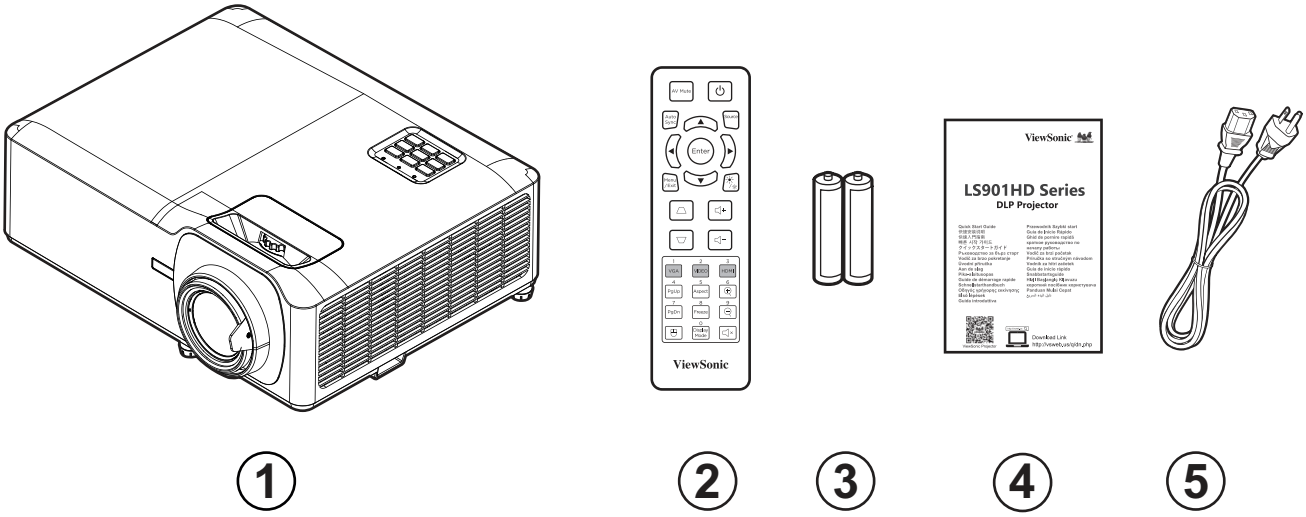

Number	Description
1	Projector
2	Remote Control
3	Batteries
4	Quick Start Guide
5	Power Cord

NOTE: The power cord and remote control included in your package may vary depending on your country. Please contact your local reseller for more information.

LS901-4K

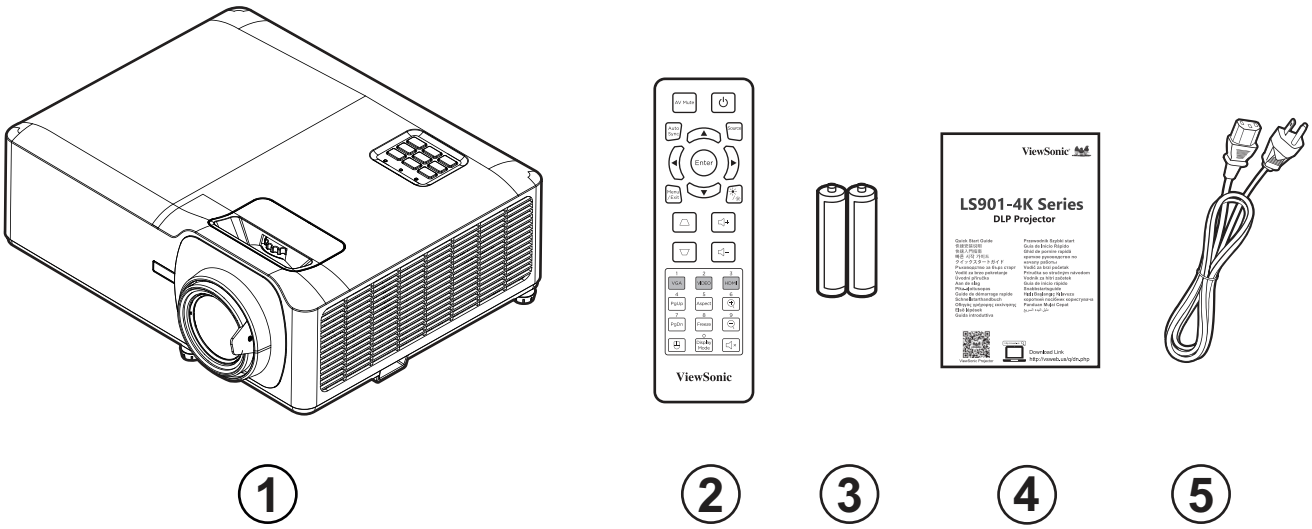

Number	Description
1	Projector
2	Remote Control
3	Batteries
4	Quick Start Guide
5	Power Cord

NOTE: The power cord and remote control included in your package may vary depending on your country. Please contact your local reseller for more information.

Product Overview

Projector

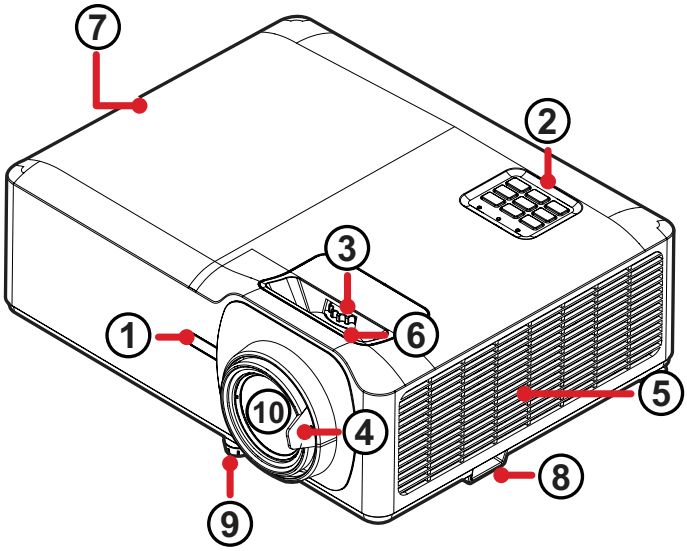

Number	Description
1	Remote IR Sensor
2	Keypad
3	Lens Shift
4	Focus Ring
5	Vent (inlet)
6	Zoom Ring
7	Vent (outlet)
8	Security Bar
9	Adjuster Foot
10	Projection Lens

NOTE: Do not block projector intake and exhaust vents.

Keypad

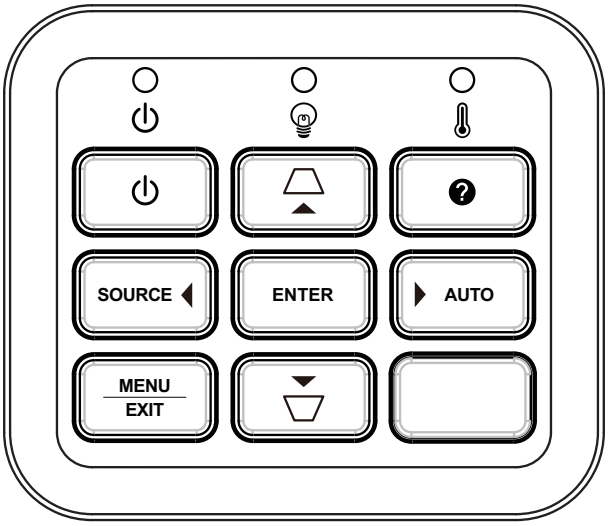

Key		Description
⏻	**Power**	Toggles the projector between standby mode and Power On.
⏢⏢	**Keystone**	Manually corrects distorted images resulting from an angled projection.
◀▶▲▼	**Navigation**	Selects the desired menu items and makes adjustments when the On-Screen Display (OSD) Menu is activated.
MENU / EXIT	**Menu/Exit**	Turns on or off the On-Screen Display (OSD) Menu.
SOURCE	**Source**	Displays the input source selection bar.
?	**Information**	Displays the INFORMATION menu.
ENTER	**Enter**	Enacts the selected On-Screen Display (OSD) Menu item when the OSD Menu is activated.
AUTO	**Auto**	Automatically determines the best picture timings for the displayed image.

Indicator Lights

Indicator Light	Description
○ ⏻	Power indicator light
○ 💡	Light source indicator light
○ 🌡	Temperature indicator light

I/O Ports

LS901HD

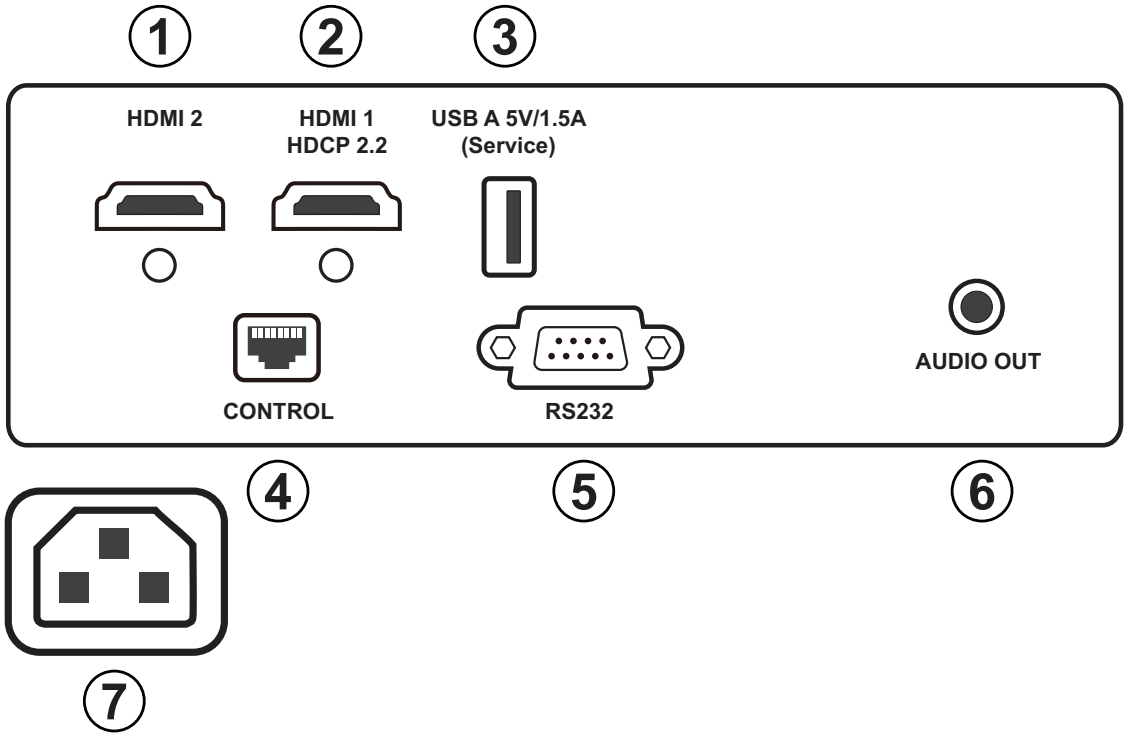

Port		Description
1	**HDMI 2**[1]	HDMI port.
2	**HDMI 1**[2]	HDMI port.
3	**USB A 5V/1.5A (Service)**	USB Type A port for power and service.
4	**Control**	LAN port.
5	**RS-232**	RS-232 control port.
6	**AUDIO OUT**	Audio signal output socket.
7	**AC IN**	AC IN socket.

1 - Supports HDCP 1.4.

2 - Supports HDCP 2.2.

LS901-4K

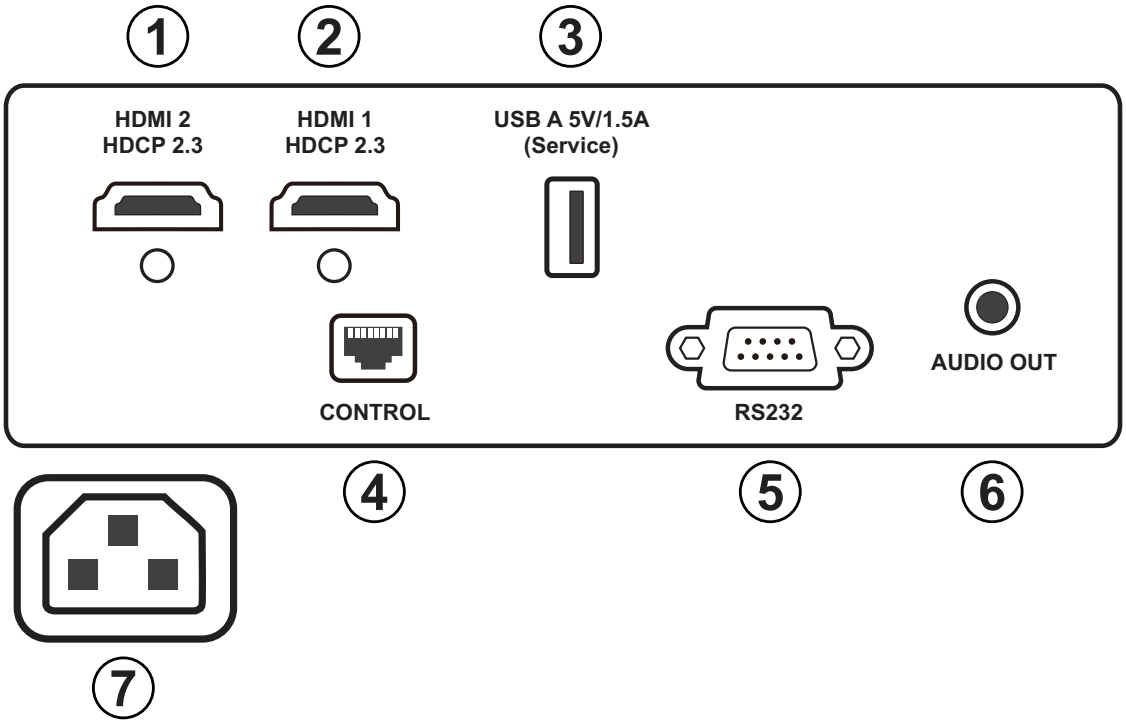

Port		Description
1	**HDMI 2**[3]	HDMI port.
2	**HDMI 1**[3]	HDMI port.
3	**USB A 5V/1.5A (Service)**	USB Type A port for power and service.
4	**Control**	LAN port.
5	**RS-232**	RS-232 control port.
6	**AUDIO OUT**	Audio signal output socket.
7	**AC IN**	AC IN socket.

3 - Supports HDCP 2.3.

Remote Control

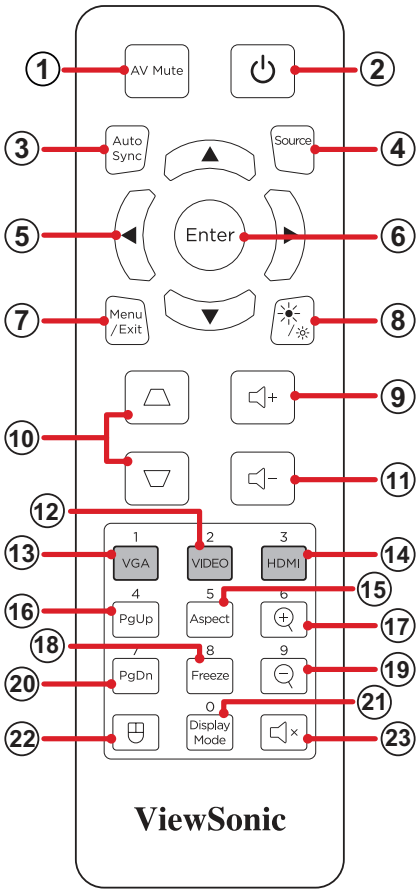

Button			Description
1	AV Mute	AV Mute	Hides the screen picture and volume mute.
2	Power		Turns the projector On or Off
3	Auto Sync	Auto Sync	Automatically determines the best picture timings for the displayed image.
4	Source	Source	Displays the input source selection bar.
5	Navigation Buttons		Navigates and selects the desired menu items and make adjustments.
6	Enter	Enter	Confirms the selection.
7	Menu/Exit	Menu /Exit	• Turns the On-Screen Display (OSD) Menu On or Off. • Go back to a previous OSD Menu. • Exit and Save menu settings.
8	Brightness		Displays the Light Source Mode selection bar.
9	Volume Up		Increase the volume level.

Button			Description
10	**Keystone**		Manually correct distorted images.
11	**Volume Down**		Decrease the volume level.
12	**Video**	2 VIDEO	*Unsupported Button*
13	**VGA**	1 VGA	*Unsupported Button*
14	**HDMI**	3 HDMI	Selects the **HDMI 1** or **HDMI 2** input source.
15	**Aspect**	5 Aspect	Displays the aspect ratio selection bar.
16	**Page Up**	4 PgUp	*Unsupported Button*
17	**Zoom In**	6	Increases the projected image size.
18	**Freeze**	8 Freeze	Freeze the projected image.
19	**Zoom Out**	9	Reduces the projected image size.
20	**Page Down**	7 PgDn	*Unsupported Button*
21	**Display Mode**	0 Display Mode	Displays the color mode selection bar.
22	**Mouse Mode**		*Unsupported Button*
23	**Mute**		Mute/Unmute.

Remote Control - Receiver Range

To ensure proper function of the remote control follow the steps below:

1. The remote control must be held at an angle within 30° perpendicular to the projector's IR remote control sensor(s).
2. The distance between the remote control and the sensor(s) should not exceed 8 m (26 ft).

NOTE: Refer to the illustration for the location of the infrared (IR) remote control sensor(s).

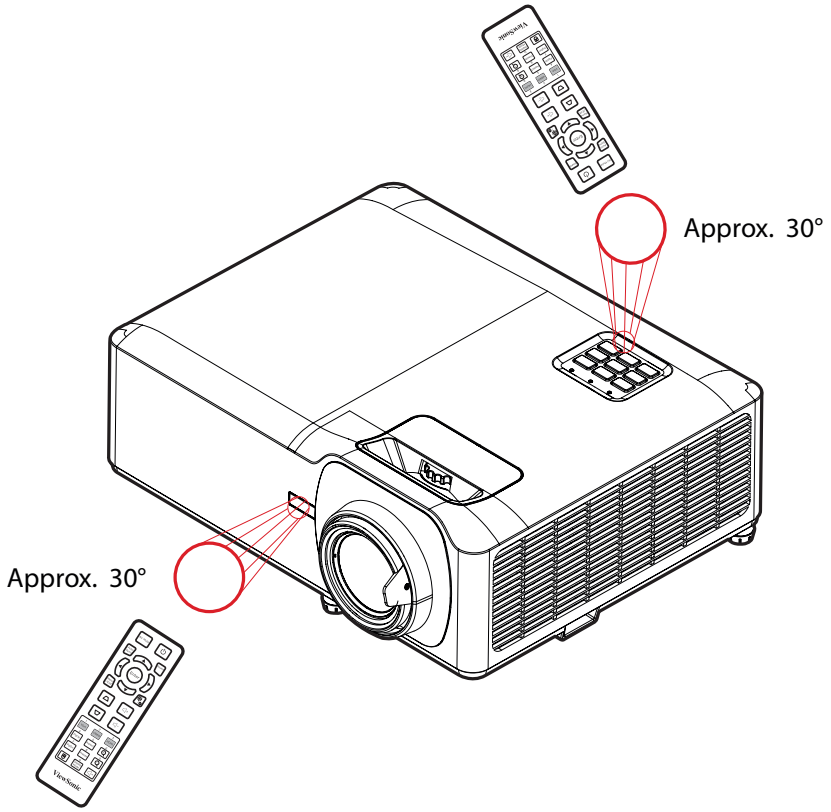

Remote Control - Replacing the Batteries

1. Remove the battery cover from the bottom of the remote control by pressing the finger grip and sliding it across.

2. Remove any existing batteries (if necessary) and install two AAA batteries.

NOTE: Observe the battery's polarities as indicated.

3. Replace the battery cover by aligning it with the base and pushing it back into position.

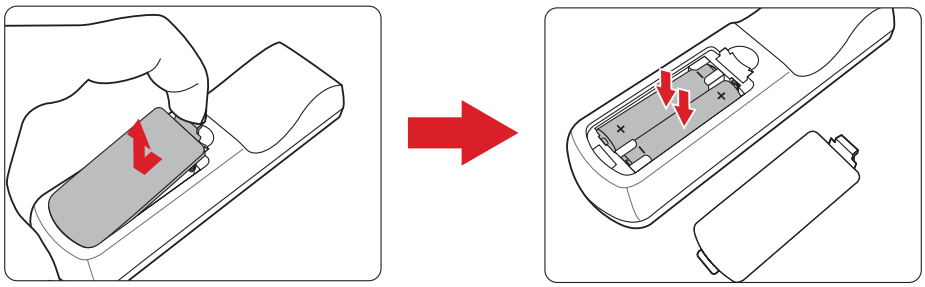

NOTE:

- Avoid leaving the remote control and batteries in excessive heat or a humid environment.
- Replace only with the same or equivalent type recommended by the battery manufacturer.
- If the batteries are drained or if you will not be using the remote control for an extended period of time, remove the batteries to avoid damage to the remote control.
- Dispose of the used batteries according to the manufacturer's instructions and local environment regulations for your region.

Initial Setup

Choosing a Location - Projection Orientation

Personal preference and room layout will decide the installation location. Consider the following:

- Size and position of your screen.
- Location of a suitable power outlet.
- Location and distance between the projector and other equipment.

The projector is designed to be installed in one of the following locations:

Location	
Front The projector is placed near the floor in front of the screen.	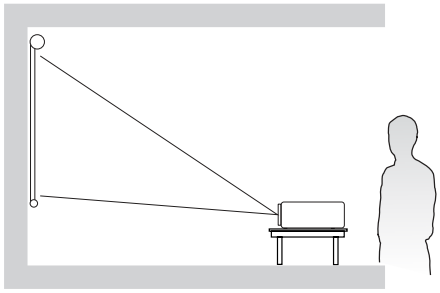
Ceiling-Top The projector is suspended upside-down from the ceiling in front of the screen.	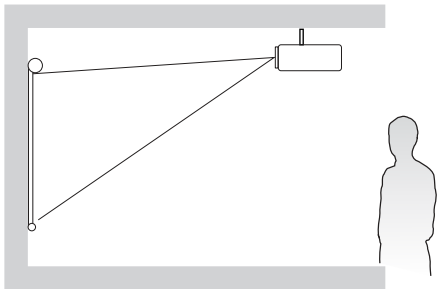
Rear[1] The projector is placed near the floor behind the screen.	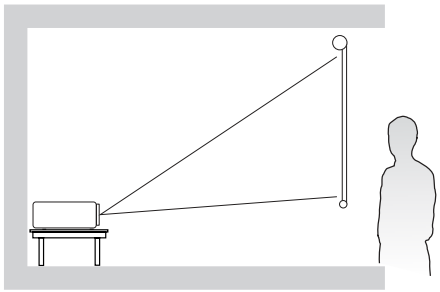
Rear-Top[1] The projector is suspended upside-down from the ceiling behind the screen.	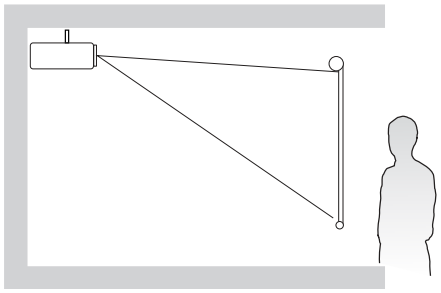

[1] A rear projection screen is required.

Projection Dimensions

LS901HD

16:9 Image on a 16:9 Screen

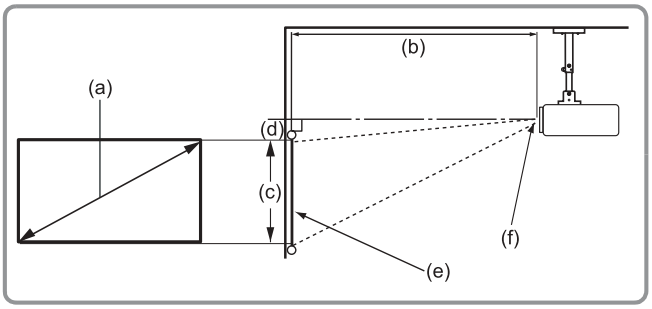

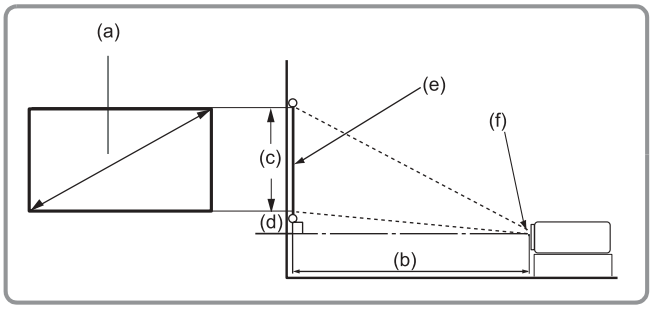

NOTE: (e) = Screen / (f) = Center of Lens

(a) Screen Size		(b) Projection Distance				(c) Image Height		(d) Vertical Offset			
		Minimum		Maximum				Minimum		Maximum	
in.	mm	in.	mm	in.	mm	in.	mm	in.	mm	in	mm
30	762	31.38	797	53.35	1355	14.71	374	0.88	22	3.97	101
40	1016	41.85	1063	71.10	1806	19.61	498	1.18	30	5.30	135
50	1270	52.28	1328	88.90	2258	24.51	623	1.47	37	6.62	168
60	1524	62.76	1594	106.69	2710	29.42	747	1.76	45	7.94	202
70	1778	73.23	1860	124.45	3161	34.32	872	2.06	52	9.27	235
80	2032	83.66	2125	142.24	3613	39.22	996	2.35	60	10.59	269
90	2286	94.13	2391	160.04	4065	44.12	1121	2.65	67	11.91	303
100	2540	104.61	2657	177.80	4516	49.03	1245	2.94	75	13.24	336
110	2794	115.04	2922	195.59	4968	53.93	1370	3.24	82	14.56	370
120	3048	125.51	3188	213.35	5419	58.83	1494	3.53	90	15.88	403
130	3302	135.98	3454	231.14	5871	63.73	1619	3.82	97	17.21	437
140	3556	146.42	3719	248.94	6323	68.64	1743	4.12	105	18.53	471
150	3810	156.89	3985	266.69	6774	73.54	1868	4.41	112	1986	504
200	5080	209.17	5313	355.59	9032	98.05	2491	5.88	149	26.47	672
250	6350	261.46	6641	444.49	11290	112.57	3113	7.35	187	33.09	841
300	7620	313.78	7970	533.39	13548	147.08	3736	8.82	224	39.71	1009

NOTE:

- These figures are for reference purposes only. Please refer to the actual projector for the precise dimensions.
- It is recommended that if you intend to permanently install the projector to physically test the projection size and distance using the actual projector before you permanently install it.

16:9 Image on a 4:3 Screen

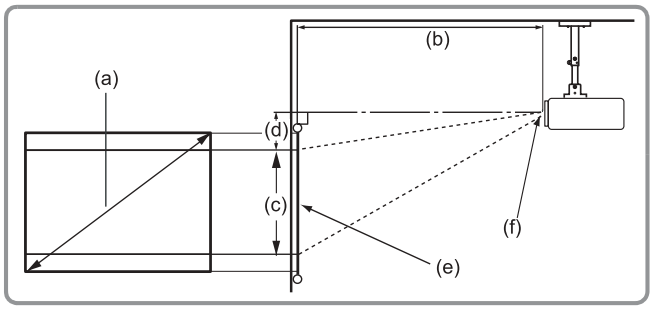

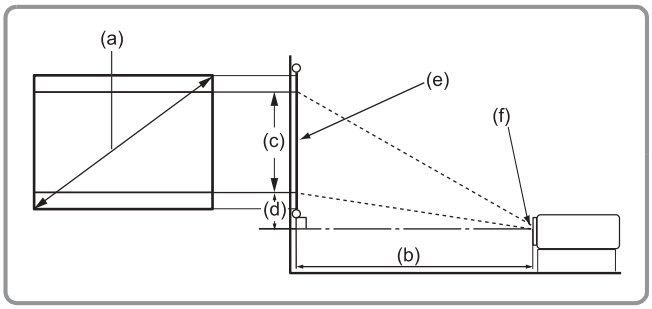

NOTE: (e) = Screen / (f) = Center of Lens

(a) Screen Size		(b) Projection Distance				(c) Image Height		(d) Vertical Offset			
		Minimum		Maximum				Minimum		Maximum	
in.	mm	in.	mm	in.	mm	in.	mm	in.	mm	in	mm
30	762	28.80	732	48.96	1244	13.50	343	0.81	21	3.65	93
40	1016	38.40	975	65.28	1658	18.00	457	1.08	27	4.86	123
50	1270	48.00	1219	81.60	2073	22.50	572	1.35	34	6.08	154
60	1524	57.60	1463	97.92	2487	27.00	686	1.62	41	7.29	185
70	1778	67.20	1707	114.24	2902	31.50	800	1.89	48	8.51	216
80	2032	76.80	1951	130.56	3316	36.00	914	2.16	55	9.72	247
90	2286	86.40	2195	146.88	3731	40.50	1029	2.43	62	10.94	278
100	2540	96.00	2438	163.20	4145	45.00	1143	2.70	69	12.15	309
110	2794	105.60	2682	179.52	4560	49.50	1257	2.97	75	13.37	339
120	3048	115.20	2926	195.84	4974	54.00	1372	3.24	82	14.58	370
130	3302	124.80	3170	212.16	5389	58.50	1486	3.51	89	15.80	401
140	3556	134.40	3414	228.48	5803	63.00	1600	3.78	96	17.01	432
150	3810	144.00	3658	244.80	6218	67.50	1715	4.05	103	18.23	463
200	5080	192.00	4877	326.40	8291	90.00	2286	5.40	137	24.30	617
250	6350	240.00	6096	408.00	10363	112.50	2858	6.75	171	30.38	772
300	7620	288.00	7315	489.60	12436	135.00	3429	8.10	206	36.45	926

NOTE:

- These figures are for reference purposes only. Please refer to the actual projector for the precise dimensions.
- It is recommended that if you intend to permanently install the projector to physically test the projection size and distance using the actual projector before you permanently install it.

Projection Dimensions

LS901-4K

16:9 Image on a 16:9 Screen

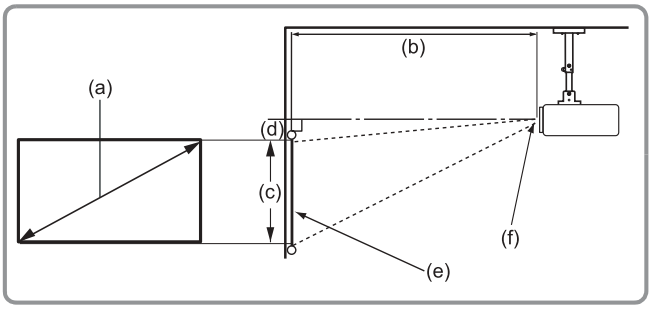

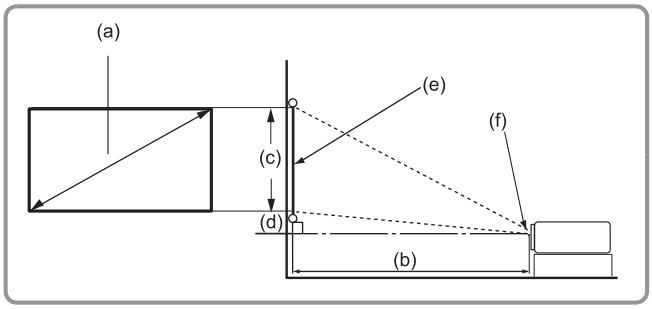

NOTE: (e) = Screen / (f) = Center of Lens

(a) Screen Size		(b) Projection Distance				(c) Image Height		(d) Vertical Offset			
		Minimum		Maximum				Minimum		Maximum	
in.	mm	in.	mm	in.	mm	in.	mm	in.	mm	in	mm
30	762	31.38	797	53.35	1355	14.71	374	0.88	22	3.97	101
40	1016	41.85	1063	71.10	1806	19.61	498	1.18	30	5.30	135
50	1270	52.28	1328	88.90	2258	24.51	623	1.47	37	6.62	168
60	1524	62.76	1594	106.69	2710	29.42	747	1.76	45	7.94	202
70	1778	73.23	1860	124.45	3161	34.32	872	2.06	52	9.27	235
80	2032	83.66	2125	142.24	3613	39.22	996	2.35	60	10.59	269
90	2286	94.13	2391	160.04	4065	44.12	1121	2.65	67	11.91	303
100	2540	104.61	2657	177.80	4516	49.03	1245	2.94	75	13.24	336
110	2794	115.04	2922	195.59	4968	53.93	1370	3.24	82	14.56	370
120	3048	125.51	3188	213.35	5419	58.83	1494	3.53	90	15.88	403
130	3302	135.98	3454	231.14	5871	63.73	1619	3.82	97	17.21	437
140	3556	146.42	3719	248.94	6323	68.64	1743	4.12	105	18.53	471
150	3810	156.89	3985	266.69	6774	73.54	1868	4.41	112	19.86	504
200	5080	209.17	5313	355.59	9032	98.05	2491	5.88	149	26.47	672
250	6350	261.46	6641	444.49	11290	122.57	3113	7.35	187	33.09	841
300	7620	313.78	7970	533.39	13548	147.08	3736	8.82	224	39.71	1009

NOTE:

- These figures are for reference purposes only. Please refer to the actual projector for the precise dimensions.
- It is recommended that if you intend to permanently install the projector to physically test the projection size and distance using the actual projector before you permanently install it.

16:9 Image on a 4:3 Screen

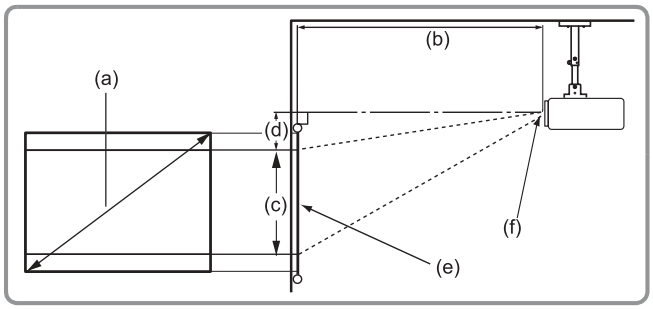

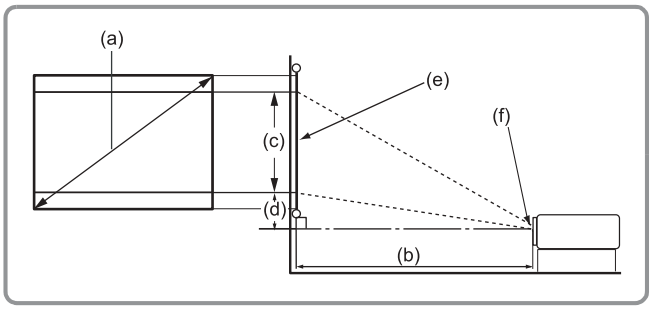

NOTE: (e) = Screen / (f) = Center of Lens

(a) Screen Size		(b) Projection Distance				(c) Image Height		(d) Vertical Offset			
		Minimum		Maximum				Minimum		Maximum	
in.	mm	in.	mm	in.	mm	in.	mm	in.	mm	in	mm
30	762	28.80	732	48.96	1244	13.50	343	0.81	21	3.65	93
40	1016	38.40	975	65.28	1658	18.00	457	1.08	27	4.86	123
50	1270	48.00	1219	81.60	2073	22.50	572	1.35	34	6.08	154
60	1524	57.60	1463	97.92	2487	27.00	686	1.62	41	7.29	185
70	1778	67.20	1707	114.24	2902	31.50	800	1.89	48	8.51	216
80	2032	76.80	1951	130.56	3316	36.00	914	2.16	55	9.72	247
90	2286	86.40	2195	146.88	3731	40.50	1029	2.43	62	10.94	278
100	2540	96.00	2438	163.20	4145	45.00	1143	2.70	69	12.15	309
110	2794	105.60	2682	179.52	4560	49.50	1257	2.97	75	13.37	339
120	3048	115.20	2926	195.84	4974	54.00	1372	3.24	82	14.58	370
130	3302	124.80	3170	212.16	5389	58.50	1486	3.51	89	15.80	401
140	3556	134.40	3414	228.48	5803	63.00	1600	3.78	96	17.01	432
150	3810	144.00	3658	244.80	6218	67.50	1715	4.05	103	18.23	463
200	5080	192.00	4877	326.40	8291	90.00	2286	5.40	137	24.30	617
250	6350	240.00	6096	408.00	10363	112.50	2858	6.75	171	30.38	772
300	7620	288.00	7315	489.60	12436	135.00	3429	8.10	206	36.45	926

NOTE:

- These figures are for reference purposes only. Please refer to the actual projector for the precise dimensions.
- It is recommended that if you intend to permanently install the projector to physically test the projection size and distance using the actual projector before you permanently install it.

Mounting the Projector

NOTE: If you buy a third party mount, please use the correct screw size. Screw size can vary depending on the thickness of the mounting plate.

1. To ensure the most secure installation, please use a ViewSonic® wall or ceiling mount.
2. Ensure the screws used to attach the mount to the projector meet the following specifications:
   - Screw type: M4 x 10
   - Maximum Screw Length: 10 mm

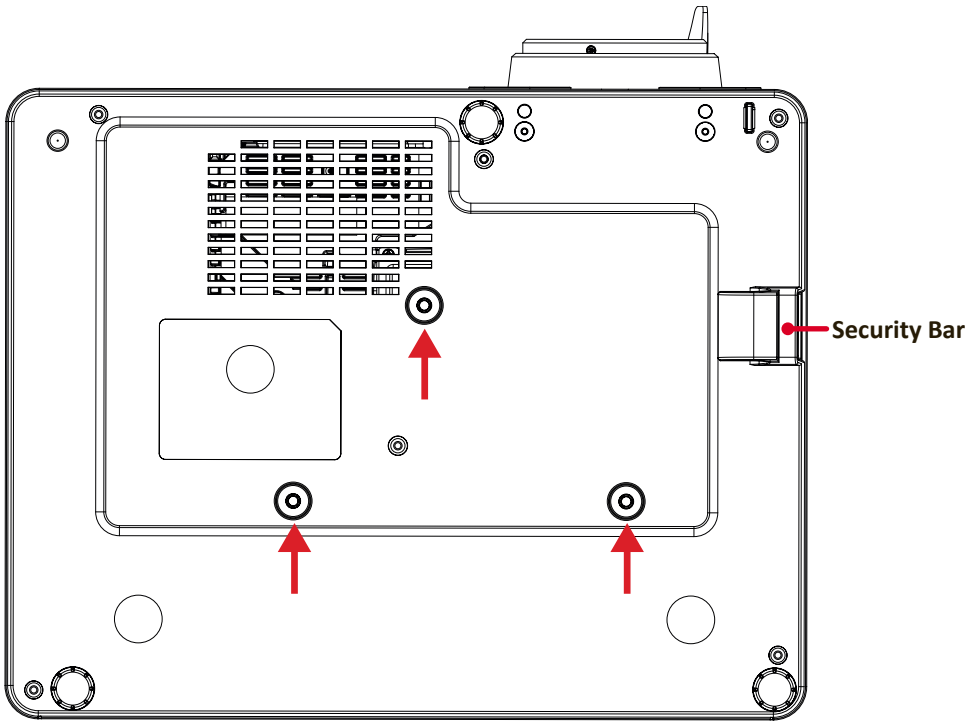

CAUTION:

- Avoid installing the projector near a heat source or air conditioner.
- Keep at least a 10 cm (3.9 in.) gap between the ceiling and the bottom of the projector.

Using the Security Bar

To help prevent the projector from being stolen, use a security slot locking device to secure the projector to a fixed object.

Making Connections

Connecting to Power

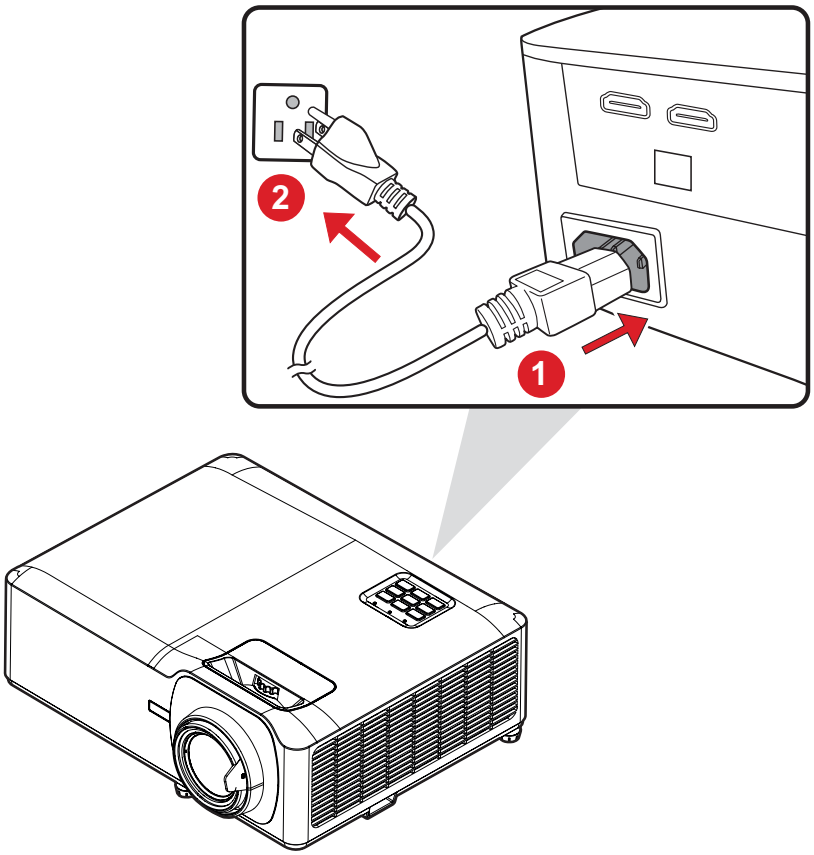

1. Connect the power cord to the AC IN jack at the rear of the projector.

2. Plug the power cord into a power outlet.

NOTE: When installing the projector, incorporate a readily accessible disconnect device in the fixed wiring, or connect the power plug to an easily accessible outlet near the unit. If a fault should occur during operation of the projector, use the disconnect device to switch off the power supply, or disconnect the power plug.

Connecting to External Devices

HDMI Connection

Connect one end of an HDMI cable to the HDMI port of your video device. Then connect the other end of the cable to the **HDMI 1** or **HDMI 2** port of your projector.

NOTE:

- For LS901HD, the **HDMI 1** port supports HDCP 2.2; the **HDMI 2** port supports HDCP 1.4.
- For LS901-4K, the **HDMI 1**/**HDMI 2** port supports HDCP 2.3

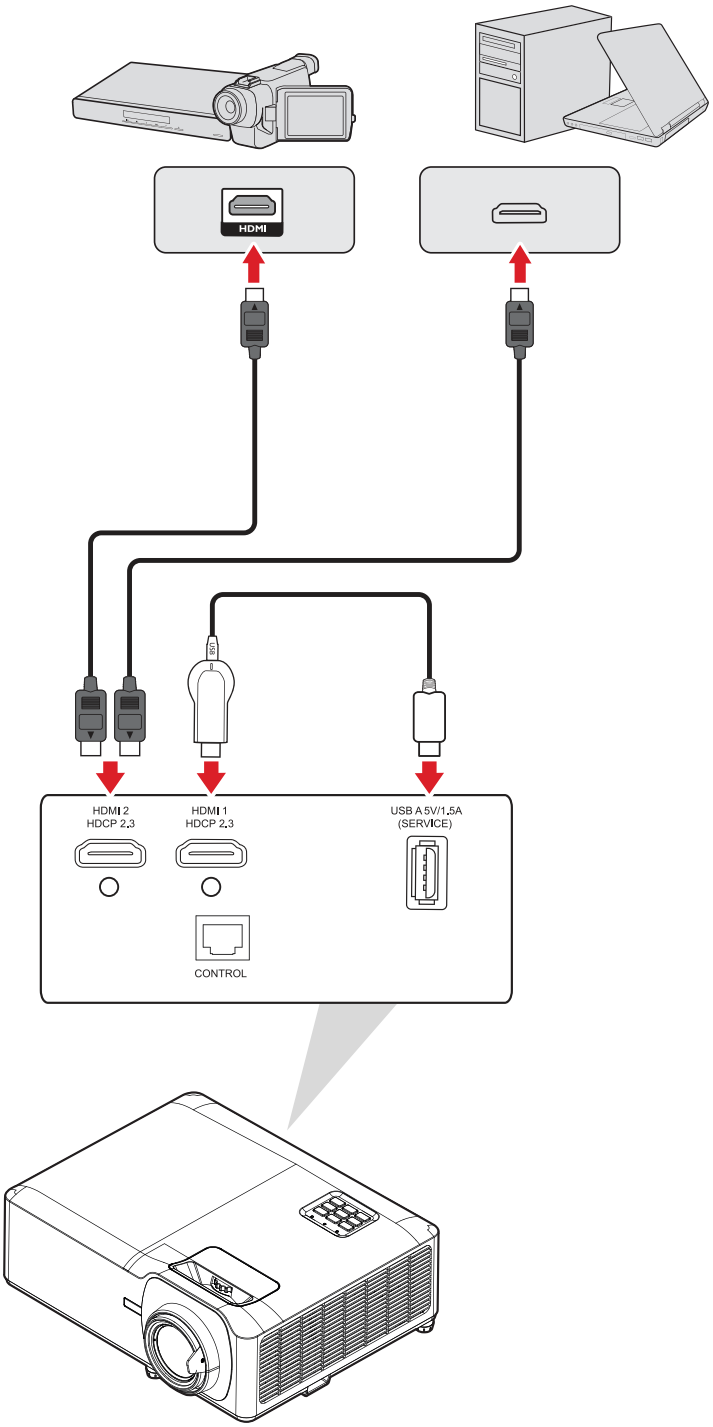

Audio Connection

You can connect to various external sound delivery devices via the **Audio Out** port.

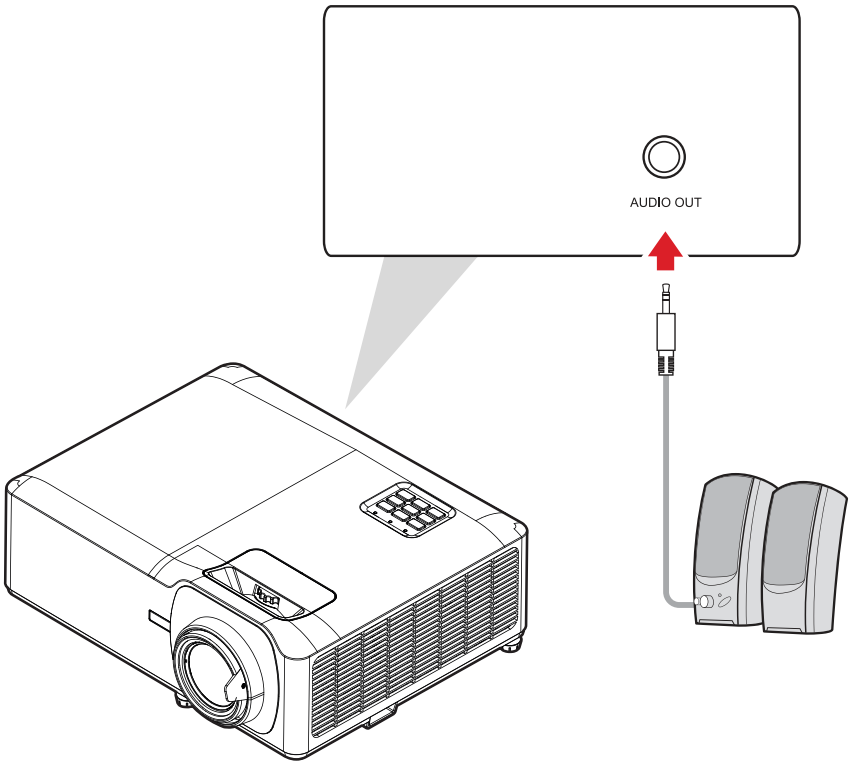

USB and Network Connection

USB Type A Connection

The USB port is for supplying power and service needs.

Network Connection

Plug the network cable into the **LAN** port.

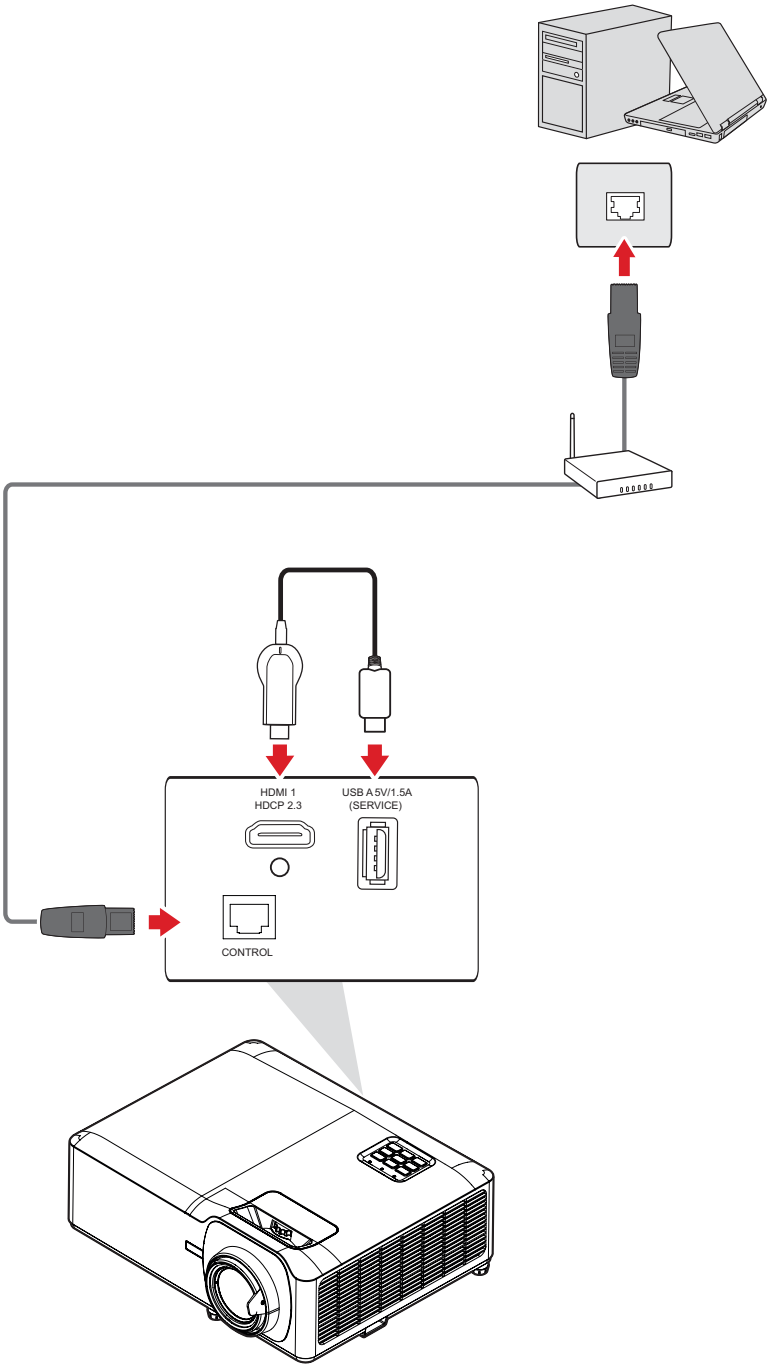

RS-232 Connection

When you use a RS-232 serial port cable to connect the projector to an external computer certain functions can be controlled remotely by the PC, including Power On/Off, Volume adjustment, Input select, Brightness, and more.

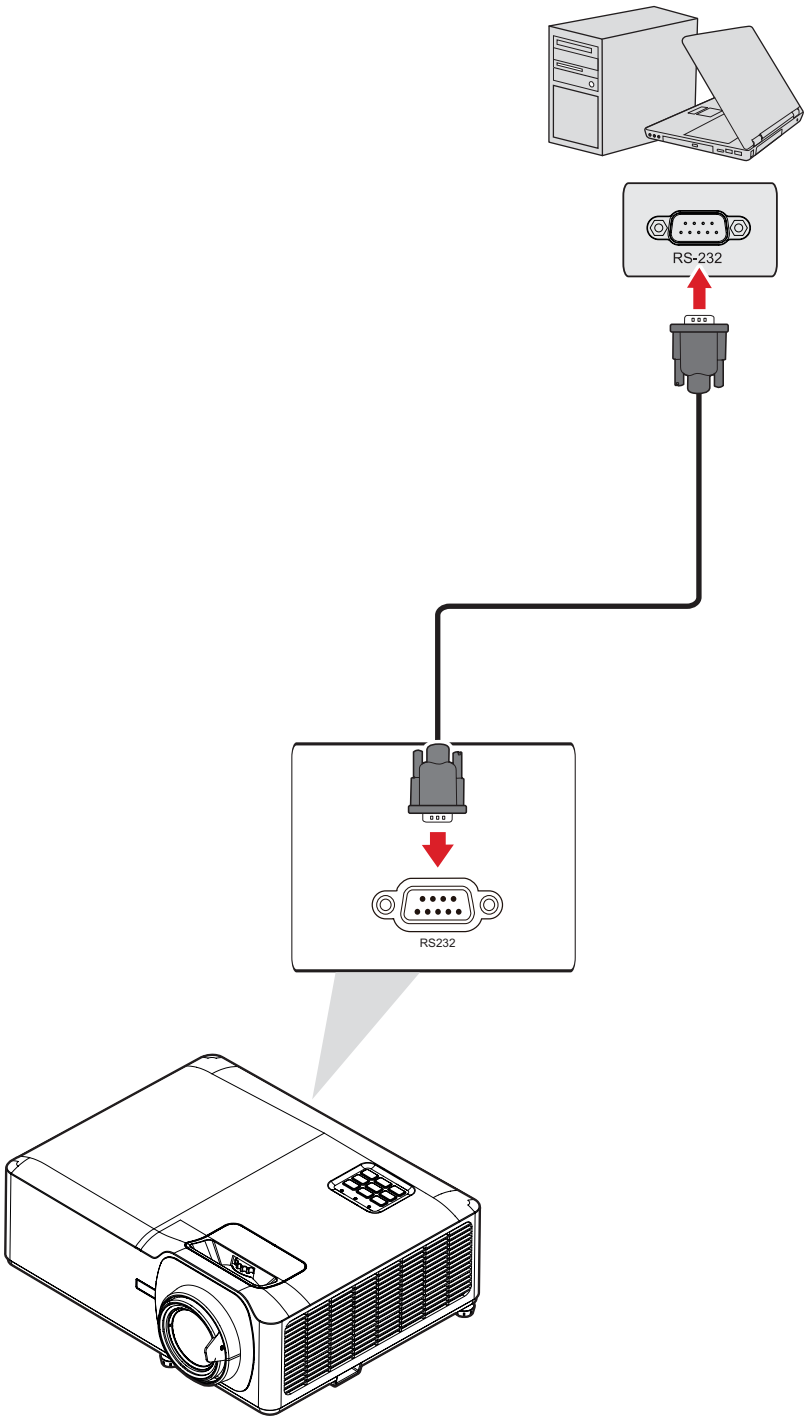

Using the Projector

Turning the Projector On

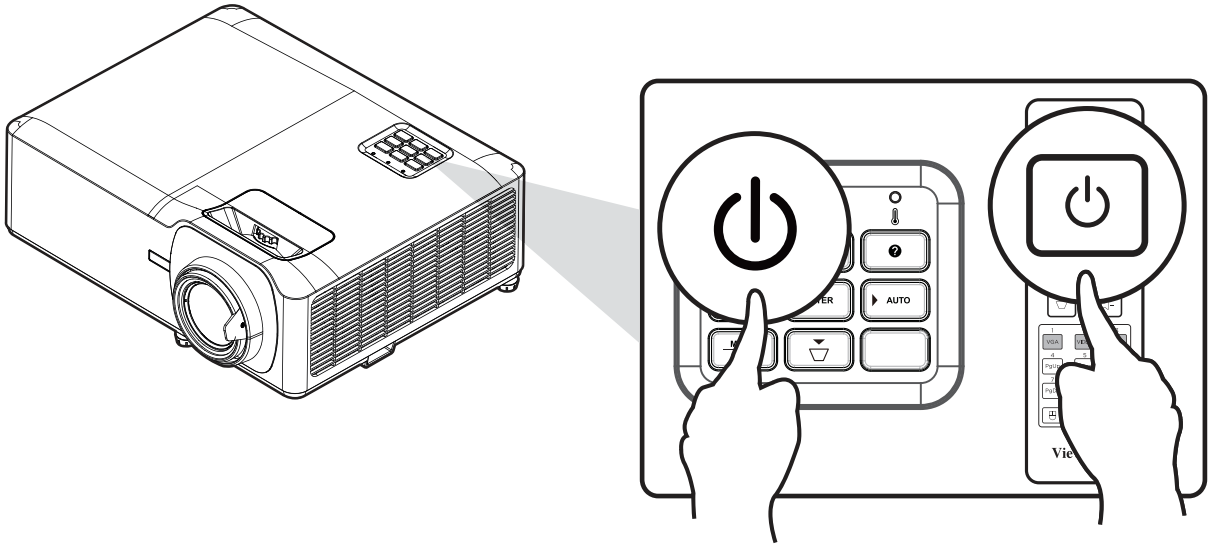

1. Make sure the projector's power cord is properly connected to a power outlet.
2. Press the **Power** button on the projector or remote control to turn on the projector.

   NOTE:

   - The Power Indicator Light will be flashing blue during startup.
   - The first time the projector is turned on, you will be prompted to select the preferred language and projection orientation.

Selecting an Input Source

The projector can be connected to multiple devices at the same time. However, it can only display one full screen at a time.

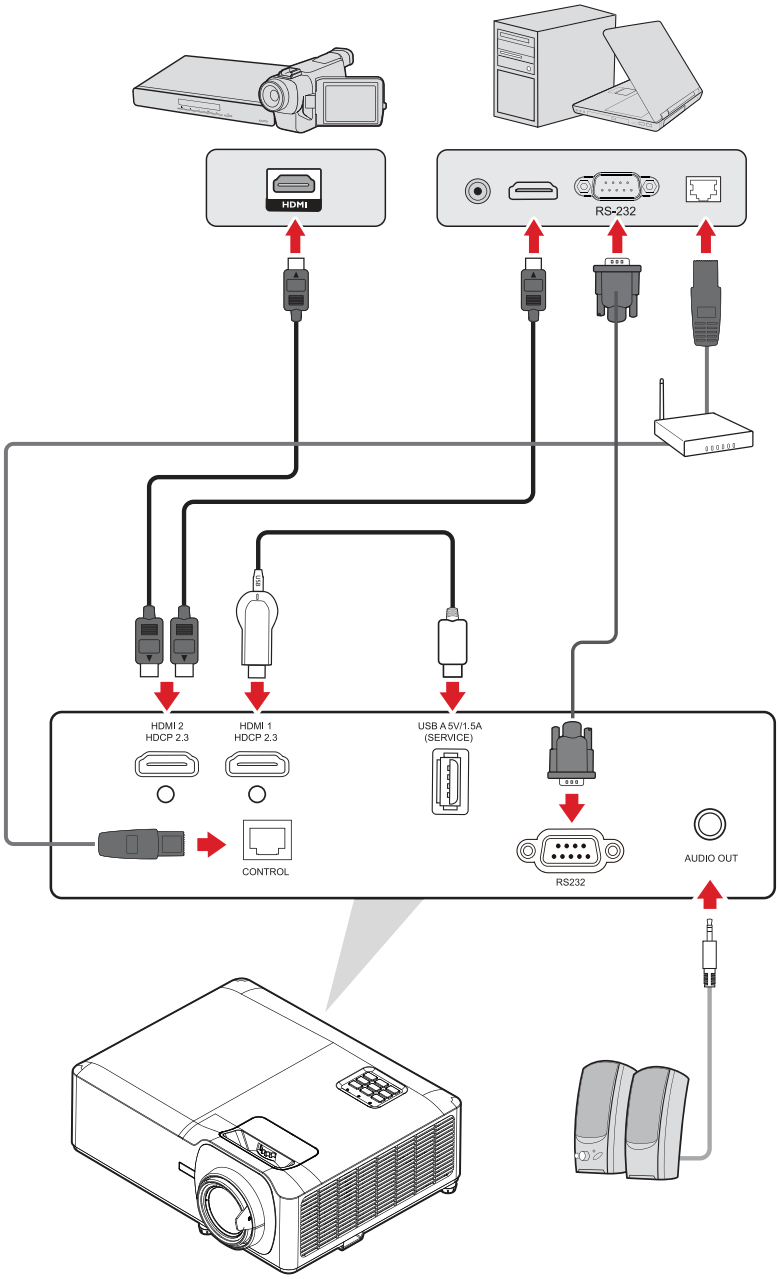

When **Auto Source** is on, the projector will automatically search for input sources. If multiple sources are connected, press the **Source** button on the projector or remote control to select the desired input.

NOTE: Make sure the connected sources are also turned on.

Adjusting the Projected Image

Adjusting the Projector's Height and Projection Angle

The projector is equipped with three adjustment feet. Adjusting the feet will change the projector's height and the vertical projection angle.

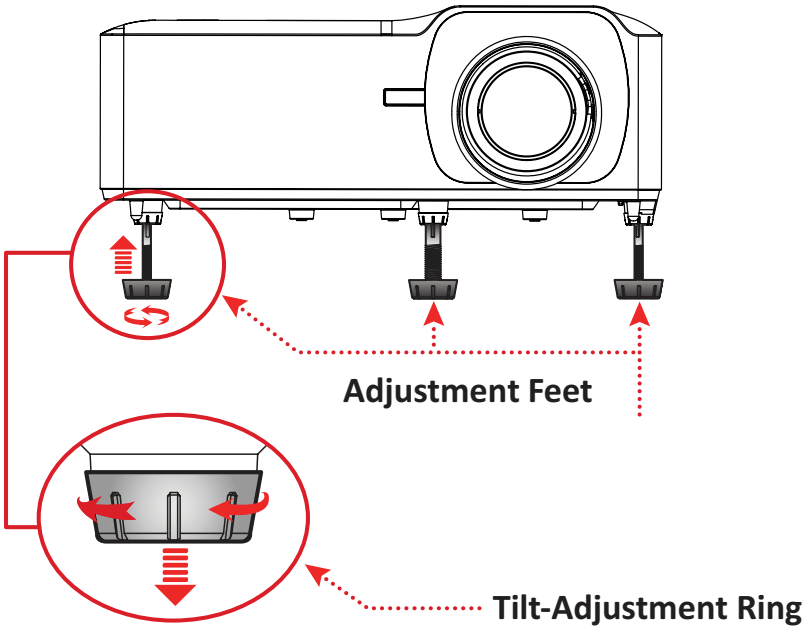

Adjusting the Focus, Keystone, and Lens Shift

You can improve and adjust the clarity and position of the image by adjusting the **Focus Ring**, **Keystone Keys**, **Lens Shift** dial, or **Zoom Ring**.

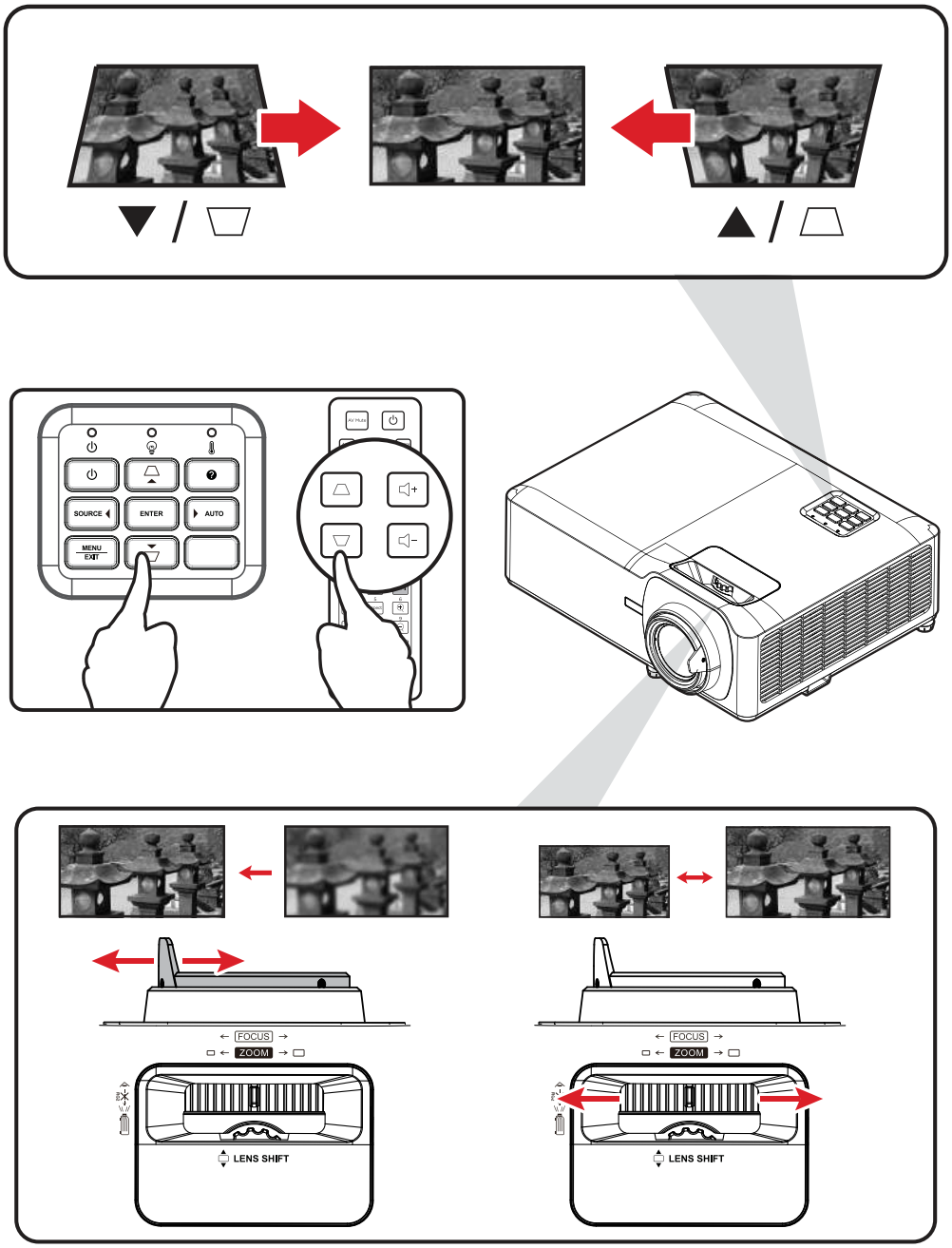

Turning the Projector Off

1. Press the **Power** button on the projector or remote control and a “power off message” will appear.
2. Press the **Power** button again to confirm and shut down the projector.
3. The Power Indicator Light will turn solid red and enter standby mode.

Menu Operation

On-Screen Display (OSD) Menu

The projector has multilingual on-screen display menus that allow you to make image adjustments and change a variety of settings.

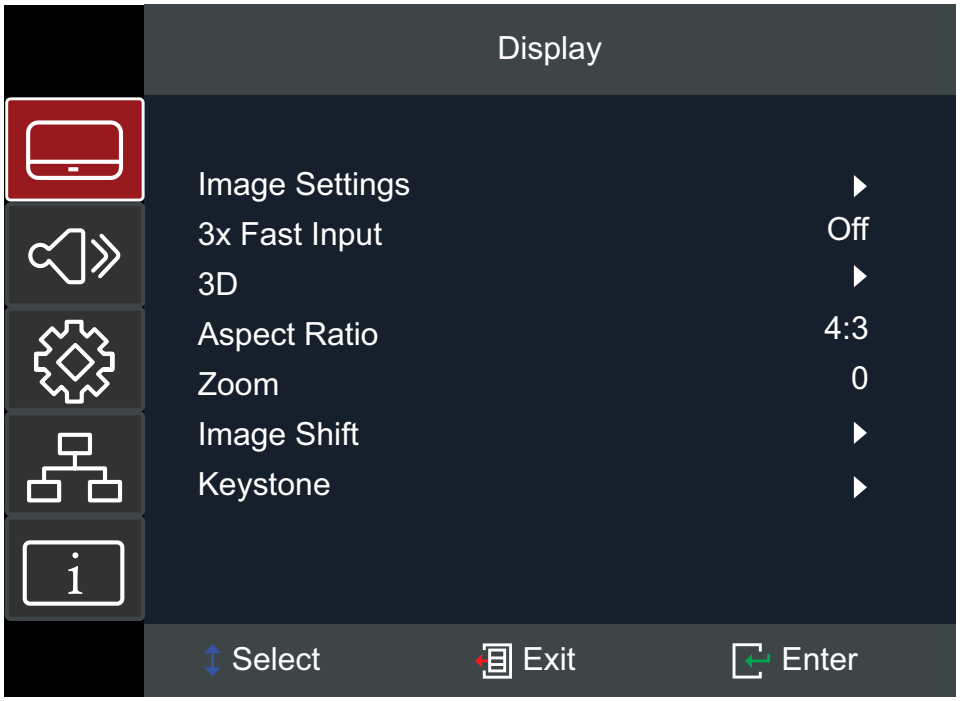

Menu		Description
Display		Adjust Image, 3D, Aspect Ratio, Edge Mask, Zoom, Image Shift, and Keystone settings.
Audio		Adjust the volume level or mute.
Setup		Adjust Projection, Power, Security, Language, Menu, Input Source, etc. settings.
Network		Adjust LAN and RS-232 control settings.
Information		View projector and network information.

Menu Navigation

The projector has multilingual on-screen display menus that allow for image and settings adjustment.

1. To open the On-Screen Display (OSD) Menu, press the **Menu/Exit** button on the projector or the remote control.
2. When the OSD is displayed, use the **Navigation** buttons (▲/▼) to select any item in the main menu. While making a selection on a particular page, press the Enter button on the projector or the remote control to enter a sub-menu.
3. Use the **Navigation** buttons (▲/▼/◀/▶) to select the desired item in the sub-menu and then press Enter to view further settings. Adjust the settings by using the **Navigation** buttons (▲/▼/◀/▶).
4. Select the next item to be adjusted in the sub-menu and adjust as described above.
5. Press **Enter** to confirm, and the screen will return to the main menu.
6. To exit, press the **Menu/Exit** button again. The OSD menu will close and the projector will automatically save the new settings.

On-Screen Display (OSD) Menu Tree

LS901HD

Main Menu	Sub-menu	Menu Option		
Display	Image Settings	Color Mode	Presentation	
			Brightest	
			HDR SIM.	
			Movie	
			Game	
			sRGB	
			DICOM SIM.	
			Golf	
			3D	
		Brightness	(-/+, -50~50)/1	
		Contrast	(-/+, -50~50)/1	
		Sharpness	(-/+, 1~15)/1	
		Color	(-/+, -50~50)/1	
		Tint	(-/+, -50~50)/1	
		Gamma	Cube	
			1.8	
			2.0	
			2.2	
			2.35	
			2.5	
			sRGB	
			Film	

Main Menu	Sub-menu	Menu Option			
Display	Image Settings	Color Settings	Brilliant Color™	(-/+, 1~10)/1	
			Color Temperature	Warm	
				Standard	
				Cool	
				Cold	
			Color Management	Color	Red
					Green
					Blue
					Cyan
					Yellow
					Magenta
					White
				Hue/R	(-/+, -50~50)/1
				Saturation/G	(-/+, -50~50)/1
				Gain/B	(-/+, -50~50)/1
				Reset	
				Exit	
			RGB Gain/Bias	Red Gain	(-/+, -50~50)/1
				Green Gain	(-/+, -50~50)/1
				Blue Gain	(-/+, -50~50)/1
				Red Bias	(-/+, -50~50)/1
				Green Bias	(-/+, -50~50)/1
				Blue Bias	(-/+, -50~50)/1
				Reset	
				Exit	

Main Menu	Sub-menu	Menu Option			
Display	Image Settings	Color Settings	Color Space	Auto	
				RGB (0~255)	
				RGB (16~235)	
				YUV	
		Light Source Mode	Dynamic Black		
			Eco		
			Light Source Power 100%~50%		
		Reset			
	3x Fast Input	Off			
		On			
	3D	3D Mode	Off		
			DLP-Link		
		3D Format	Auto		
			SBS		
			Top and Bottom		
			Frame Sequential		
		3D Sync Invert	Off		
			On		
	Aspect Ratio	4:3			
		16:9			
		Native			
		Auto			
	Zoom	(-/+, -5~25)/1			
	Image Shift	Horizontal (H.)	(-/+, -100~100)/1		
		Vertical (V.)	(-/+, -100~100)/1		
	Keystone	Four Corners	Top-Left		
			Top-Right		
			Bottom-Left		
			Bottom-Right		
		H. Keystone	(-/+, -30~30)/1		
		V. Keystone	(-/+, -30~30)/1		
		Reset			

Main Menu	Sub-menu	Menu Option		
Audio	Mute	Off		
		On		
	Volume	(-/+, 0~10)/1		
Setup	Projection	Front		
		Rear		
		Ceiling-Top		
		Rear-Top		
	Power Settings	Direct Power On	Off	
			On	
		Signal Power On	Off	
			On	
		Auto Power Off (min.)	(-/+, 0~180)/5 minutes	
		Power Mode (Standby)	Eco	
			Active	
			ErP Off	
	Security	Power On Lock	Off	
			On	
		Change Password		

Main Menu	Sub-menu	Menu Option		
Setup	HDMI CEC	HDMI CEC	Off	
			On	
	Test Pattern	Test Pattern	Off	
			Green Grid	
			Magenta Grid	
			White Grid	
			White	
			Test Card	
	Options	Language	English	
			Deutsch	
			Français	
			Italiano	
			Español	
			Português	
			Polski	
			Nederlands	
			Svenska	
			Norsk/Dansk	
			Suomi	
			ελληνικά	
			繁體中文	
			簡体中文	
			日本語	
			한국어	
			Русский	
			Magyar	
			Čeština	
			عربي	
			ไทย	
			Türkçe	
			فارسی	
			Tiếng Việt	
			Bahasa Indonesia	
			Română	
			Slovenčina	

Main Menu	Sub-menu	Menu Option		
Setup	Options	Auto Source	Off	
			On	
		High Altitude	Off	
			On	
		Logo	Default	
			Neutral	
	Reset	Reset to Default		

Main Menu	Sub-menu	Menu Option		
Network	LAN	Network Status		
		MAC Address		
		DHCP	Off	
			On	
		IP Address	xxx.xxx.xxx	
		Subnet Mask	xxx.xxx.xxx	
		Gateway	xxx.xxx.xxx	
		DNS	xxx.xxx.xxx	
		Reset		
	Control	Crestron	Off	
			On	
		Extron	Off	
			On	
		PJ Link	Off	
			On	
		AMX Device Discovery	Off	
			On	
		Telnet	Off	
			On	
		HTTP	Off	
			On	

Main Menu	Sub-menu	Menu Option	
Information	Serial Number		
	Source		
	Resolution		
	Refresh Rate		
	Color Mode		
	Power Mode (Standby)		
	Light Source Hours		
	Network Status		
	IP Address		
	Light Source Mode		
	FW Version	System	
		LAN	
		MCU	

LS901-4K

Main Menu	Sub-menu	Menu Option		
Display	Image Settings	Color Mode	Presentation	
			Brightest	
			HDR	
			HLG	
			Movie	
			Game	
			sRGB	
			Golf	
			3D	
		Brightness	(-/+, -50~50)/1	
		Contrast	(-/+, -50~50)/1	
		Sharpness	(-/+, 1~15)/1	
		Color	(-/+, -50~50)/1	
		Tint	(-/+, -50~50)/1	
		Gamma	Cube	
			1.8	
			2.0	
			2.2	
			2.35	
			2.5	
			sRGB	
			Film	

Main Menu	Sub-menu	Menu Option			
Display	Image Settings	Color Settings	Brilliant Color™	(-/+, 1~10)/1	
			Color Temperature	Warm	
				Standard	
				Cool	
				Cold	
			Color Management	Color	Red
					Green
					Blue
					Cyan
					Yellow
					Magenta
					White
				Hue/R	(-/+, -50~50)/1
				Saturation/G	(-/+, -50~50)/1
				Gain/B	(-/+, -50~50)/1
				Reset	
				Exit	

Main Menu	Sub-menu	Menu Option			
Display	Image Settings	Color Settings	Color Space	Auto	
				RGB (0~255)	
				RGB (16~235)	
				YUV	
		Light Source Mode	Dynamic Black		
			Eco		
			Light Source Power 100%~50%		
		Reset			
	Ultra Fast Input	Active			
		Inactive			
	3D	3D Mode	Off		
			On		
		3D Format	Auto		
			SBS		
			Top and Bottom		
			Frame Sequential		
		3D Sync Invert	Off		
			On		
	Aspect Ratio	4:3			
		16:9			
		21:9			
		Native			
		Auto			
	Zoom	(-/+, -5~20)/1			
	Keystone	Four Corners	Top-Left		
			Top-Right		
			Bottom-Left		
			Bottom-Right		
		H. Keystone	(-/+, -30~30)/1		
		V. Keystone	(-/+, -30~30)/1		
		3x3 Warp			
		Reset			

Main Menu	Sub-menu	Menu Option		
Audio	Mute	Off		
		On		
	Volume	(-/+, 0~10)/1		
Setup	Projection	Front		
		Rear		
		Ceiling-Top		
		Rear-Top		
	Power Settings	Direct Power On	Off	
			On	
		Signal Power On	Off	
			On	
		Auto Power Off (min.)	(-/+, 0~180)/5 minutes	
		Power Mode (Standby)	Eco	
			Active	
			ErP Off	
	Security	Power On Lock	Off	
			On	
		Change Password		

Main Menu	Sub-menu	Menu Option		
Setup	HDMI CEC	HDMI CEC	Off	
			On	
	Test Pattern	Test Pattern	Off	
			Green Grid	
			Magenta Grid	
			White Grid	
			White	
			Test Card	
	Options	Language	English	
			Deutsch	
			Français	
			Italiano	
			Español	
			Português	
			Polski	
			Nederlands	
			Svenska	
			Norsk/Dansk	
			Suomi	
			ελληνικά	
			繁體中文	
			簡体中文	
			日本語	
			한국어	
			Русский	
			Magyar	
			Čeština	
			عربي	
			ไทย	
			Türkçe	
			فارسی	
			Tiếng Việt	
			Bahasa Indonesia	
			Română	
			Slovenčina	

Main Menu	Sub-menu	Menu Option		
Setup	Options	Auto Source	Off	
			On	
		High Altitude	Off	
			On	
		Logo	Default	
			Neutral	
	Reset	Reset to Default		
Network	LAN	Network Status		
		MAC Address		
		DHCP	Off	
			On	
		IP Address	xxx.xxx.xxx	
		Subnet Mask	xxx.xxx.xxx	
		Gateway	xxx.xxx.xxx	
		DNS	xxx.xxx.xxx	
		Reset		
	Control	Crestron	Off	
			On	
		Extron	Off	
			On	
		PJ Link	Off	
			On	
		AMX Device Discovery	Off	
			On	
		Telnet	Off	
			On	
		HTTP	Off	
			On	

Main Menu	Sub-menu	Menu Option	
Information	Serial Number		
	Source		
	Resolution		
	Refresh Rate		
	Color Mode		
	Power Mode (Standby)		
	Light Source Hours		
	Network Status		
	IP Address		
	Light Source Mode		
	FW Version	System	
		LAN	
		MCU	

Menu Options

Display Menu

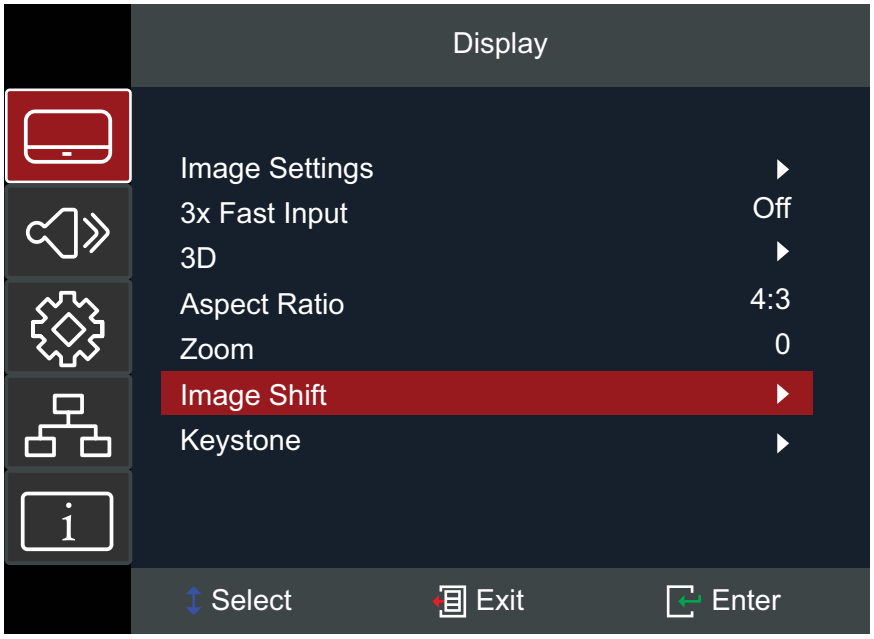

<table>
<tr><th>Menu</th><th>Description</th></tr>
<tr><td>Image Settings</td><td>
<u>Color Mode</u>
There are several predefined display modes that you can choose from to suit your viewing preference.
<table>
<tr><th>Mode</th><th>Description</th></tr>
<tr><td>Presentation</td><td>Suitable for most presenting needs for business and education environments.</td></tr>
<tr><td>Brightest</td><td>Suitable for bright, well-lit environments.</td></tr>
<tr><td>HDR SIM.[1]/ HDR[2]</td><td>Decodes and displays High Dynamic Range (HDR) content for the deepest blacks, brightest whites, and vivid cinematic color using REC.2020 color gamut. This mode can be selected to enhances non-HDR content with simulated High Dynamic Range (HDR).</td></tr>
<tr><td>HLG[2]</td><td>Enable for HLG supported content and darker blacks, brighter highlights, and vivid color.</td></tr>
<tr><td>Movie</td><td>Provides the best balance of detail and colors for watching movies.</td></tr>
<tr><td>Game</td><td>Optimizes your projector for maximum contrast and vivid colors allowing you to see shadow detail when playing games.</td></tr>
<tr><td>sRGB</td><td>Standardized sRGB color gamut.</td></tr>
<tr><td>DICOM SIM.[1]</td><td>Suitable for projecting monochrome images.</td></tr>
<tr><td>Golf</td><td>Suitable for golf simulators.</td></tr>
<tr><td>3D</td><td>Optimized for 3D content.
NOTE: 3D glasses are needed.</td></tr>
</table>
</td></tr>
</table>

1 - LS901HD only.

2 - LS901-4K only.

Menu	Description
Image Settings	Brightness The higher the value, the brighter the image. Lower values will result in a darker image. Contrast Use this to set the peak white level after you have previously adjusted the **Brightness** setting to suit your selected input and viewing environment. Sharpness A high value results in a sharper picture; a low value softens the picture. Color Adjust an image from black and white to fully saturated color. Tint The higher the value, the more greenish the picture becomes. The lower the value, the more reddish the picture becomes. Gamma Reflects the relationship between input source and picture brightness.

<table>
<tr><th>Menu</th><th>Description</th></tr>
<tr><td>Image Settings</td><td>
<u>Color Settings</u>
<table>
<tr><th>Setting</th><th>Description</th></tr>
<tr><td>Brilliant Color™</td><td>A color-processing algorithm and enhancements to enable higher brightness while providing true, more vibrant colors in picture.</td></tr>
<tr><td>Color Temperature</td><td>Select from Warm, Standard, Cool, or Cold.</td></tr>
<tr><td>Color Management</td><td>Only in permanent installations with controlled lighting levels such as: boardrooms, lecture halls, or home theaters should Color Matching be considered.

Color Matching provides fine color control adjustment to allow for more accurate color reproduction, should you require it.

If you have purchased a test disc, which contains various color test patterns and can be used to test the color presentation on monitors, TVs, projectors, etc., you can project any image from the disc on the screen and enter the Color Matching menu to make adjustments.</td></tr>
<tr><td>RGB Gain/Bias[3]</td><td>Configure the brightness (gain) and contrast (bias).</td></tr>
<tr><td>Color Space</td><td>Select from Auto, RGB (0~255), RGB (16~235), and YUV color space.</td></tr>
</table>
<u>Light Source Mode</u>
<table>
<tr><th>Mode</th><th>Description</th></tr>
<tr><td>Dynamic Black</td><td>Automatically adjust the picture brightness in order to give optimum contrast performance.</td></tr>
<tr><td>Eco</td><td>Dim the light output, lowering power consumption.</td></tr>
<tr><td>Light Source Power</td><td>Select the power percentage (50%~100%) for brightness mode.</td></tr>
</table>
<u>Reset</u>
Return current display mode settings (Brightness, Contrast, Sharpness, Color, Tint, Gamma, Brilliant Color, Color Temperature, Color Management, RGB Gain/Bias[3], Color Space, Brightness Mode) to default values.
</td></tr>
</table>

3 - LS901HD only.

<table>
<tr><th>Menu</th><th>Description</th></tr>
<tr><td>3x Fast Input[4]/Ultra Fast Input[5]</td><td>This function is favorable to frame rate reducing.</td></tr>
<tr><td>3D</td><td>
<u>3D Mode</u>
Enable or disable the 3D function.

<u>3D Format</u>
Select the 3D content format.
NOTE: A Blu-ray 3D source will be detected automatically, and options will not be selectable.
<table>
<tr><th>Option</th><th>Description</th></tr>
<tr><td>Auto</td><td>When a 3D identification signal is detected, the 3D format is selected automatically.</td></tr>
<tr><td>SBS</td><td>Display in Side-by-Side format.</td></tr>
<tr><td>Top and Bottom</td><td>Display in Top and Bottom format.</td></tr>
<tr><td>Frame Sequential</td><td>Display in Frame Sequential format.</td></tr>
</table>
<u>3D Sync Invert</u>
Enable or disable the 3D Sync Invert function.
</td></tr>
</table>

NOTE: This projector is a 3D ready projector with DLP-Link 3D solution. Please make sure your 3D glasses are for DLP-Link 3D. This projector supports Blue-ray 3D and frame sequential (page-flip) 3D via the **HDMI 1/ HDMI 2** ports. For the best performance, 1920 x 1080 resolution is recommended. Please note that 4K (3840 x 2160) resolution is not supported in 3D mode.

4 - LS901HD only.

5 - LS901-4K only.

<table>
<tr><th>Menu</th><th>Description</th></tr>
<tr><td>Aspect Ratio</td><td>Select the aspect ratio of the projected image.
<table>
<tr><th>Aspect Ratio</th><th>Description</th></tr>
<tr><td>4:3</td><td>Scales an image so that it is displayed in the center of the screen with a 4:3 aspect ratio. This is most suitable for 4:3 images like computer monitors, standard definition TV, and 4:3 aspect DVD movies, as it displays them without aspect alteration.</td></tr>
<tr><td>16:9</td><td>Scales an image so that it is displayed in the center of the screen with a 16:9 aspect ratio. This is most suitable for images which are already in a 16:9 aspect, like high definition TV.</td></tr>
<tr><td>21:9[6]</td><td>Scales an image so that it is displayed in the center of the screen with a 21:9 aspect ratio without aspect alteration.</td></tr>
<tr><td>Native</td><td>Projects the image as its original resolution and resizes it to fit within the display area. For input signals with lower resolutions, the projected image will be displayed in its original size.</td></tr>
<tr><td>Auto</td><td>Scales an image proportionally to fit the projector’s native resolution in its horizontal width. This is suitable for the incoming image which is neither 4:3 nor 16:9 and you want to make the most use of the screen without altering the image’s aspect ratio.</td></tr>
</table></td></tr>
<tr><td>Zoom</td><td>Reduce or magnify the projected image.</td></tr>
<tr><td>Image Shift</td><td>Adjust the projected image horizontally or vertically.</td></tr>
</table>

6 - LS901-4K only.

<table>
<tr><th>Menu</th><th>Description</th></tr>
<tr><td>Keystone</td><td>
<table>
<tr><th>Option</th><th>Description</th></tr>
<tr><td>Four Corners</td><td>Adjust each corner to make a square image when the projection surface is not level.
NOTE: While adjusting the Four Corners, the Aspect Ratio, Edge Mask, Image Shift, and Zoom menus will be disabled. To enable them, reset the Keystone settings to default.</td></tr>
<tr><td>H. Keystone</td><td>Adjust image distortion horizontally.</td></tr>
<tr><td>V. Keystone</td><td>Adjust image distortion vertically.</td></tr>
<tr><td>3x3 Warp[7]</td><td>Configure the geometric distortion of the projector’s images when the images are projected onto screens which have an uneven surface such as a cylinder, a spherical shape, etc.</td></tr>
<tr><td>Reset</td><td>Return the Keystone settings to default.</td></tr>
</table>
</td></tr>
</table>

7 - LS901-4K only.

Audio Menu

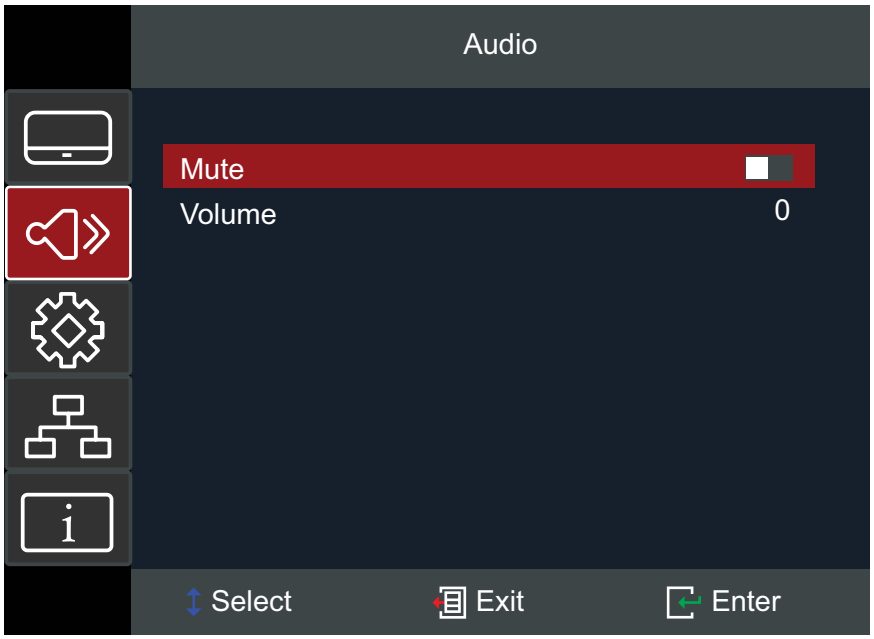

Menu	Description
Mute	Temporarily turn off the sound.
Volume	Adjust the volume level.

Setup Menu

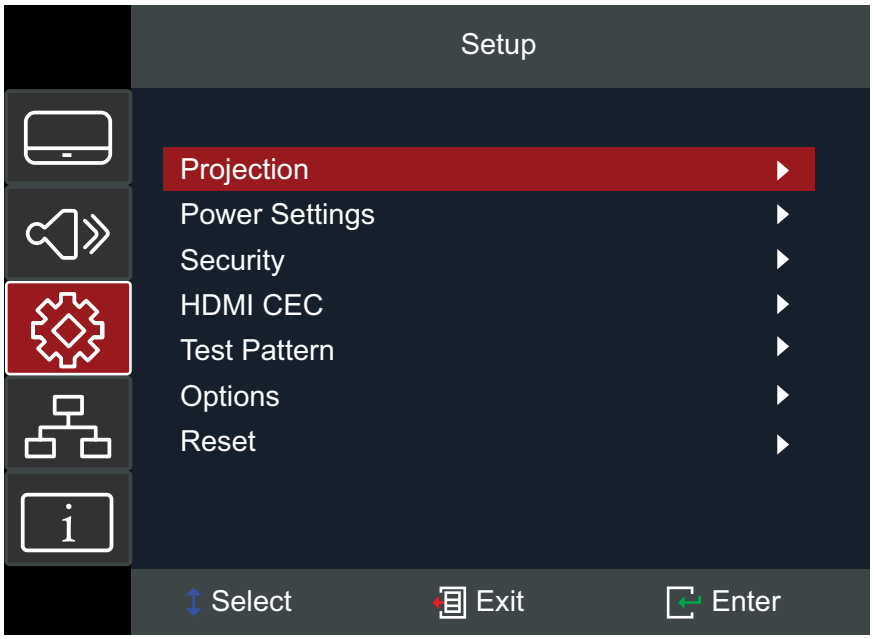

Menu	Description
Projection	Select the preferred projection: Front, Rear, Ceiling-Top, and Rear-Top.
Power Settings	<u>Direct Power On</u> Automatically power on the projector when AC power is supplied, without pressing the **Power** button on the projector or the remote control. <u>Signal Power On</u> Automatically power on the projector when a signal is detected, without pressing the **Power** button on the projector or on the remote control. **NOTE:** The LS901-4K will not power on automatically by HDMI if there is one HDMI cable already connected. <u>Auto Power Off (min.)</u> A countdown timer will start when there is no signal being sent to the projector. The projector will automatically power off when the countdown has finished (in minutes). **NOTE:** • When you deactivate the power management function, energy consumption will increase. • A warning message will also appear: COMMISION REGULATION (EU) 2023/826 Disabling this function will increase energy consumption.

<table>
<tr><th>Menu</th><th>Description</th></tr>
<tr><td>Power Settings</td><td>
<u>Power Mode (Standby)</u>
NOTE:
• There is no USB power supply when the projector is in standby mode.
• If you wish to connect to the projector via LAN in its standby mode, be sure you have selected “Erp Off”.
• When you deactivate the power management function, energy consumption will increase.
• A warning message will also appear:
COMMISION REGULATION (EU) 2023/826
Disabling this function will increase energy consumption.
<table>
<tr><th>Mode</th><th>Description</th></tr>
<tr><td>Eco</td><td>Minimum power consumption (< 0.5 Watt) that does not allow network controlling.</td></tr>
<tr><td>Active</td><td>Normal standby (> 0.5Watt) which allows the LAN module to enter sleep mode(< 0.5 Watt) in 20 minutes and can’t be woken by Wake on LAN (WoL).</td></tr>
<tr><td>ErP Off</td><td>Keep ports and network always powered, allows the projector to provide the network function in standby mode.</td></tr>
</table>
</td></tr>
<tr><td>Security</td><td>
<u>Power On Lock</u>
Enable or disable a password prompt before using the projector.
NOTE: The default password is: 1234
<u>Change Password</u>
Set or modify the password.
</td></tr>
</table>

Menu	Description
HDMI CEC	When you connect HDMI CEC-compatible devices to the projector with HDMI cables, you can control them on the same power on or power off status using the HDMI CEC control feature in the projector's OSD. This lets one device or multiple devices in a group power on or power off via HDMI CEC in a typical configuration. **NOTE:** • In order for the CEC function to work properly, make sure that the device is correctly connected to the **HDMI** input of the projector via an HDMI cable, and its CEC function is turned on. • Depending on the connected device, the CEC function may not work. • If both **HDMI 1** and **HDMI 2** ports are occupied, the CEC function will not be able to detect the correct source.[8]
Test Pattern	Select the test pattern from green grid, magenta grid, white grid, white, or disable this function (off).
Options	Language Select the On-Screen Display (OSD) Menu language. Auto Source Automatically find an available input source. High Altitude When On, the fans will spin faster for better cooling and performance. This is useful for high altitude environments where the air is thin. Logo Set the "startup screen". If changes are made, they will take effect the next time the projector is powered on.
Reset	Return the settings to default. **NOTE:** When resetting, the following settings will still remain: Zoom, Keystone Settings, Language, Projection, Power Mode (Standby), High Altitude Mode, Security Settings, Network Settings, Light Source Hours Information.

8 - LS901-4K only.

Network Menu

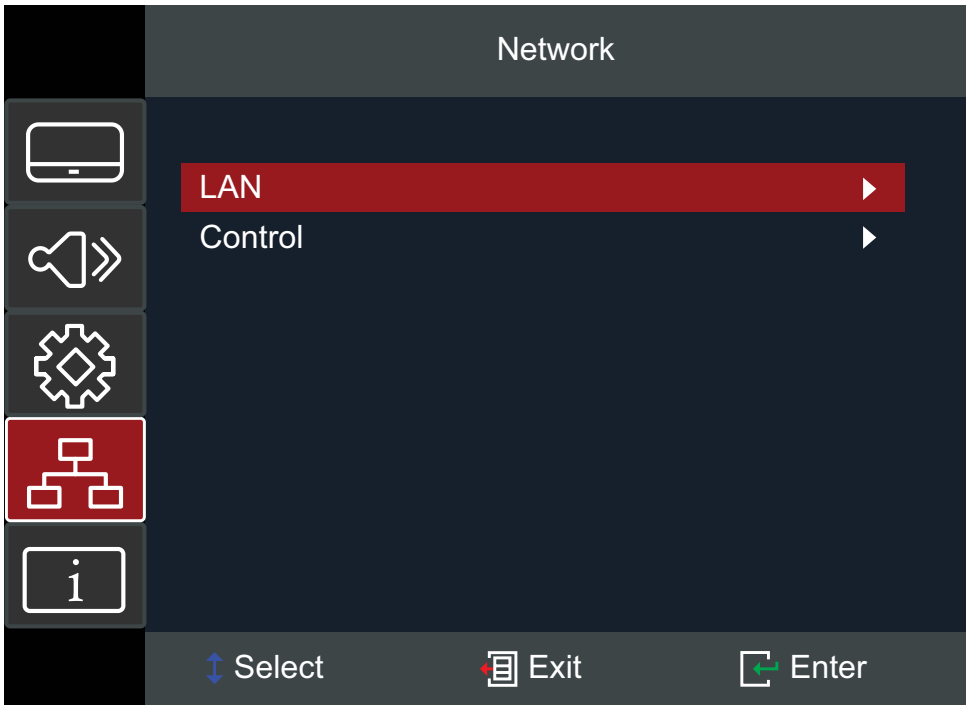

Menu	Description
LAN	View network information and enable/disable DHCP.
Control	Enable or disable network control suites. **NOTE:** To connect successfully, the control suite must be enabled. 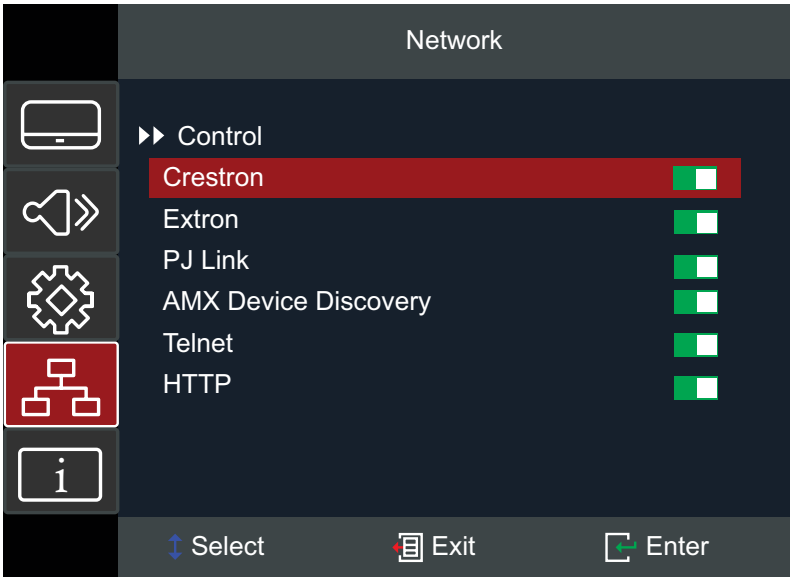

Controlling the Projector through a Network

The projector provides diverse networking and remote management features. The LAN /RJ45 function of the projector, through a network, can remotely manage: Power On/Off, Volume adjustment, Input select, Brightness, and more.

NOTE: Please ensure **Network > Control > HTTP** is enabled.

1. Connect the projector to a network via the LAN/RJ45 port.

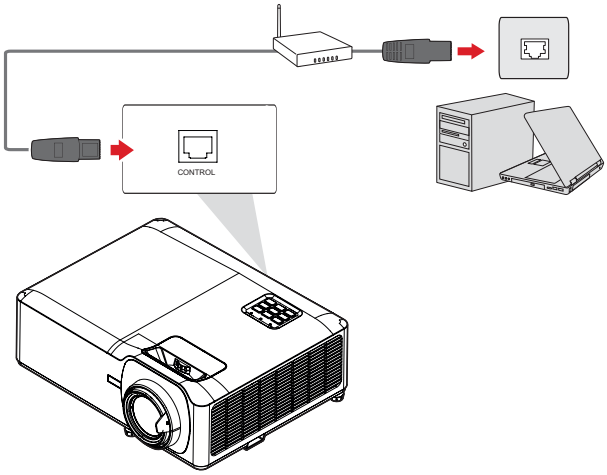

2. Open the On-Screen Display Menu and go to: **Network** > **LAN**.

3. Select **DHCP** and turn it **On** to obtain an IP address automatically; or select **Off** to enter the network information manually.

NOTE: Please wait for around 15~20 seconds, then re-enter the **LAN** settings page. The Projector IP Address, Subnet Mask, Default Gateway, DNS Server settings will be displayed. Make note of the IP address displayed in the Projector IP Address row.

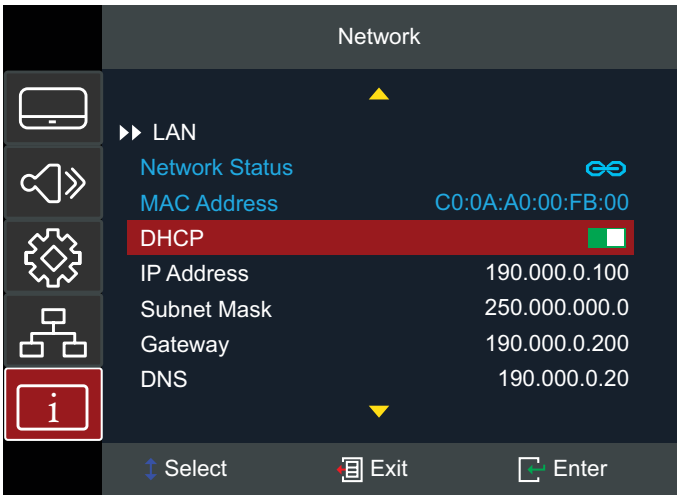

4. Using a web browser, and under the same network, type in the projector's IP address.

5. Enter the user name and password, then click **Log in**.

NOTE: When logging in for the first time, please follow the description on the web page to set a password. Then you will be able to log in.

Information Menu

View Serial Number, Source, Resolution, Refresh Rate, Display Mode, Power Mode, Light Source Hours, Network Status, IP Address, Brightness Mode, and Firmware Version information.

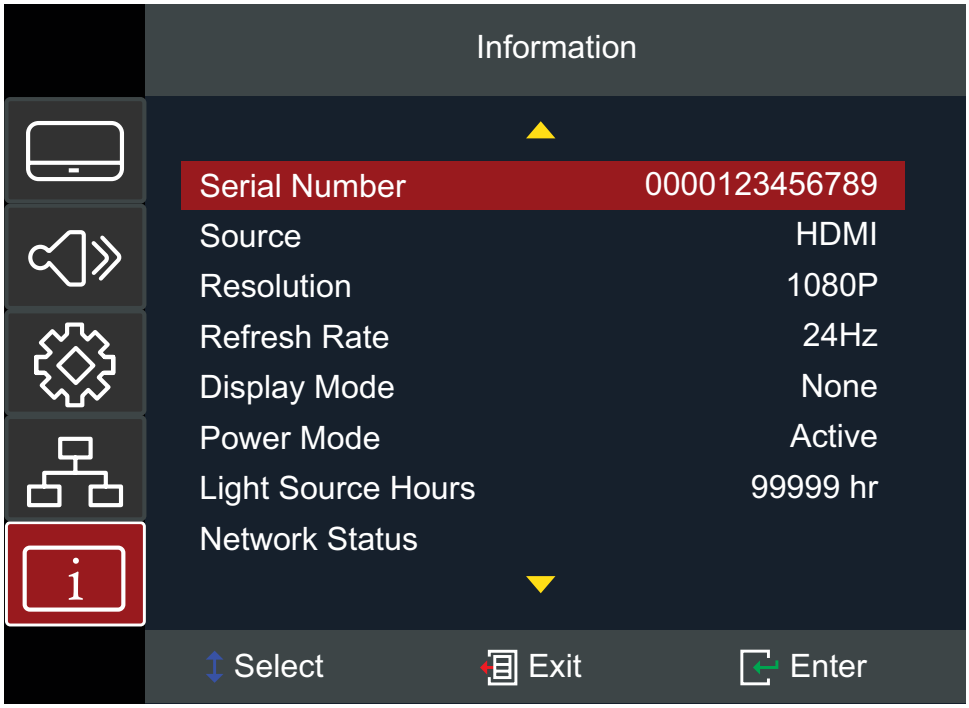

Appendix

Specifications

Item	Category	Specifications	
		LS901HD	LS901-4K
Projector	Type	Laser	
	Display Size	30”~300”	
	Throw Ratio	1.2~2.04 (100” @ 2.66 m)	
	Display System	1-CHIP DMD	
Input Signal	HDMI 1	f_h: 15~135 kHz, f_v:23~120 Hz, Pixel rate: 600 MHz	f_h: 15~255 kHz, f_v:23~240 Hz, Pixel rate: 600 MHz
	HDMI 2	f_h: 15~135 kHz, f_v:23~120 Hz, Pixel rate: 300 MHz	
Resolution	Native	1920 x 1080	3840 x 2160
Power	Input Voltage	AC 100-240V, 50/60 Hz (auto switch)	
Operating Conditions	Altitude	0 to 2,500 ft. at 0°C to 40°C 2,500 to 5,000 ft. at 0°C to 35°C 5,000 to 12,000 ft. at 0°C to 30°C	
	Relative Humidity	10% to 80% (non-condensing)	
	Temperature	0°C to 40°C	
		32°F to 104°F	
Storage Conditions	Altitude	0 to 12.1 km	
		0 to 40,000 ft	
	Relative Humidity	5% to 90% (non-condensing)	
	Temperature	-20°C to 60°C	
		-4°F to 140°F	
Dimensions	Physical (W x H x D)	337 x 280 x 132 mm (13.27” x 11.02” x 5.20”)	
Weight	Physical	4.77 kg	4.85 kg
		10.52 lb	10.70 lb
Power Consumption	On[1]	245W (Typical)	
	Off	< 0.5W (Standby)	

[1] The test condition follows EEI standards.

Projector Dimensions

337 mm (W) x 132 mm (H) x 280 mm (D)

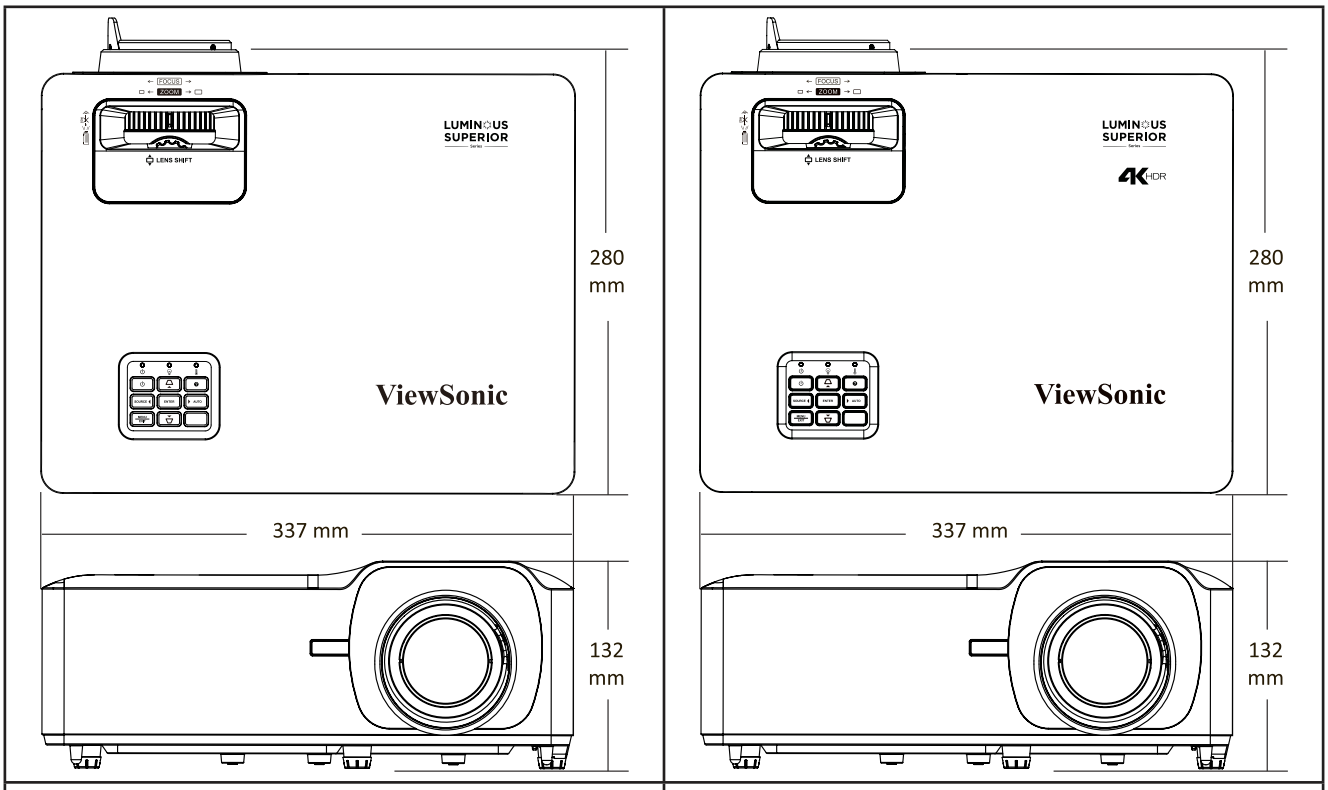

LS901HD	LS901-4K

Timing Chart

LS901HD

HDMI 1 (v. 2.0)

HDMI - PC Signal

Timing	Resolution	Refresh Rate (Hz)
VGA	640 x 480	60/67/72/75/120
	720 x 400	70
SVGA	800 x 600	56/60/72/75/120
	832 x 624	75
XGA	1024 x 768	60/70/75/120
SXGA	1280 x 1024	60/75
PowerBook G4	1152 x 870	75
WXGA	1280 x 720	60
	1280 x 800	60/120
	1366 x 768	60
UXGA	1600 x 1200	60
WSXGA+	1920 x 1080	60
WUXGA	1920 x 1200	60

HDMI - Video Signal

Signal	Resolution	Refresh Rate (Hz)
SDTV(480p)	720 x 480	60
SDTV(576p)	720 x 576	50
HDTV(720p)	1280 x 720	50/60
HDTV(1080i)	1920 x 1080	50/60
HDTV(1080p)	1920 x 1080	24/50/60
4K	3840 x 2160	24/25/30/50/60
4K	4096 x 2160	24/25/30/50/60

HDMI - 3D

Signal	Resolution	Refresh Rate (Hz)
Frame packing		
720p	1280 X 720	50/60
1080p	1920 X 1080	24
Side-by-Side		
1080i	1920 X 1080	50/60
Top-and-Bottom		
720p	1280 X 720	50/60
1080p	1920 X 1080	24

NOTE:

- 1080i @ 25 Hz and 720p @ 50 Hz will run in 100 Hz; other 3D timing will run in 120 Hz.
- 1080p @24 Hz will run 144 Hz (XGA, WXGA, 1080p)/96 Hz (WUXGA).
- If the input frame rate is 48 Hz or greater, the output frame rate is set to twice the input frame rate (FRC = 2X mode).
- If the 3D input frame rate is 25 Hz or greater, the output frame rate is set to four times the input frame rate (FRC = 4X mode).
- If the 3D input frame rate is 24 Hz (includes 23.9 Hz), the output frame rate is set to six times the input frame rate (FRC = 6X mode).

HDMI 2 (v. 1.4)

HDMI - PC Signal

Timing	Resolution	Refresh Rate (Hz)
VGA	640 x 480	60/67/72/75/120
	720 x 400	70
SVGA	800 x 600	56/60/72/75/120
	832 x 624	75
XGA	1024 x 768	60/70/75/120
SXGA	1280 x 1024	60/75
PowerBook G4	1152 x 870	75
WXGA	1280 x 720	60
	1280 x 800	60/120
	1366 x 768	60
UXGA	1600 x 1200	60
WSXGA+	1920 x 1080	60
WUXGA	1920 x 1200	60

HDMI - Video Signal

Signal	Resolution	Refresh Rate (Hz)
SDTV(480i)	720(1440) x 480	60
SDTV(480p)	640 x 480	60
SDTV(480p)	720 x 480	60
SDTV(576i)	720(1440) x 576	50
SDTV(576P)	720 x 576	50
HDTV(720p)	1280 x 720	50/60
HDTV(1080i)	1920 x 1080	50/60
HDTV(1080p)	1920 x 1080	24/50/60
4K	3840 x 2160	24/25/30

HDMI - 3D

Signal	Resolution	Refresh Rate (Hz)
Frame packing		
720p	1280 X 720	50/60
1080p	1920 X 1080	24
Side-by-Side		
1080i	1920 X 1080	50/60
Top-and-Bottom		
720p	1280 X 720	50/60
1080p	1920 X 1080	24

NOTE:

- 1080i @ 25 Hz and 720p @ 50 Hz will run in 100 Hz; other 3D timing will run in 120 Hz.
- 1080p @24 Hz will run 144 Hz (XGA, WXGA, 1080p)/96 Hz (WUXGA).
- If the input frame rate is 48 Hz or greater, the output frame rate is set to twice the input frame rate (FRC = 2X mode).
- If the 3D input frame rate is 25 Hz or greater, the output frame rate is set to four times the input frame rate (FRC = 4X mode).
- If the 3D input frame rate is 24 Hz (includes 23.9 Hz), the output frame rate is set to six times the input frame rate (FRC = 6X mode).

LS901-4K

HDMI 1 and HDMI 2 (v. 2.0)

HDMI - PC Signal

Timing	Resolution	Refresh Rate (Hz)
VGA	640 x 480	60/67/72/75
	720 x 400	70
SVGA	800 x 600	56/60/72/75
	832 x 624	75
XGA	1024 x 768	60/70/75
	1152 x 864	75
PowerBook G4	1152 x 870	75
WXGA	1280 x 720	120
	1440 x 900	60
QuadVGA	1280 x 960	60
SXGA	1280 x 1024	60/75
WSXGA+	1680 x 1050	60
	1920 x 1080	60/240
WUXGA	1920 x 1200	60
WQHD	2560 x 1440	120
4K	3840 x 2160	60

HDMI - Video Signal

Signal	Resolution	Refresh Rate (Hz)
SDTV(480i)	720 x 480	60
SDTV(480p)	720 x 480	60
SDTV(576i)	720 x 576	50
SDTV(576i)	720 x 576	50
HDTV(720p)	1280 x 720	50/60
HDTV(1080i)	1920 x 1080	50/60
HDTV(1080p)	1920 x 1080	24/25/30/50/60/120
QHD	2560 x 1080	60
4K	3840 x 2160	24/25/30/50/60

HDMI - 3D

Signal	Resolution	Refresh Rate (Hz)
Frame packing		
720p	1280 X 720	50/60
1080p	1920 X 1080	24
Side-by-Side		
1080i	1920 X 1080	50/60
Top-and-Bottom		
720p	1280 X 720	50/60
1080p	1920 X 1080	24

NOTE:

- 1080i @ 25 Hz and 720p @ 50 Hz will run in 100 Hz; other 3D timing will run in 120 Hz.
- 1080p @24 Hz will run 144 Hz (XGA, WXGA, 1080p)/96 Hz (WUXGA).
- If the input frame rate is 48 Hz or greater, the output frame rate is set to twice the input frame rate (FRC = 2X mode).
- If the 3D input frame rate is 25 Hz or greater, the output frame rate is set to four times the input frame rate (FRC = 4X mode).
- If the 3D input frame rate is 24 Hz (includes 23.9 Hz), the output frame rate is set to six times the input frame rate (FRC = 6X mode).

Troubleshooting

This section describes some common problems that you may experience when using the projector.

Problem or Issue	Possible Solutions
The projector does not turn on	• Ensure the power cord is properly attached to the projector and to the power outlet. • If the cooling process has not completed, please wait until it has finished then try to turn on the projector again. • If the above does not work, try another power outlet or another electrical device with the same power outlet.
There is no picture	• Ensure the video source cable is connected properly, and that the video source is turned on. • If the input source is not selected automatically, select the correct source with the “Source Input” on either the projector or the remote control.
The image is blurred	• Adjusting focus with the Focus Ring will help correctly focus the projection lens. • Ensure the projector and screen are aligned properly. If necessary, adjust the height of the projector as well as the projection angle and direction.
The image is reversed	• Open the OSD Menu and go to: **Setup** > **Projection** and adjust the projection option.
The image is stretched when projecting a 16:9 DVD	• When you play an anamorphic DVD or 16:9 DVD, the projector will show the best image in 16:9. • If you play a 4:3 format DVD title, please change the format as 4:3 in projector OSD Menu. • Please setup the display format as 16:9 (wide) aspect ratio on the DVD player.

Problem or Issue	Possible Solutions
The remote control does not work	• Ensure there are no obstacles between the remote control and projector; and that they are within range, 8 m (26 ft). • The batteries may be out of power, please check and replace if necessary.
The projector stops responding to all controls	• Turn off the projector and unplug the power cord. Wait at least 20 seconds then reconnect and try again.

LED Indicators

When the warning indicators (see below) light up or flash, the projector will automatically shutdown. Unplug the power cord from the projector, wait for 30 seconds and try again. If the warning indicators light up or flash, please contact your nearest service center for assistance.

<table>
<tr><th rowspan="2">Status and Description</th><th colspan="2">Power Indicator Light</th><th>Temperature Indicator Light</th><th>Light Source Indicator Light</th></tr>
<tr><th>Red</th><th>Blue</th><th>Red</th><th>Red</th></tr>
<tr><td>Standby State (Power cord input)</td><td>Steady Light</td><td colspan="3"></td></tr>
<tr><td>Power On (Warming)</td><td rowspan="3"></td><td>Flashing (0.5 sec off/0.5 sec on)</td><td colspan="2" rowspan="3"></td></tr>
<tr><td>Power On and Lamp Lighting</td><td>Steady Light</td></tr>
<tr><td>Power Off (Cooling)</td><td>Flashing (0.5 sec off/0.5 sec on)
Back to red steady light when the cooling fan turns off.</td></tr>
<tr><td>Error (Lamp failure)</td><td>Flashing</td><td rowspan="3"></td><td></td><td>Steady Light</td></tr>
<tr><td>Error (Fan failure)</td><td>Flashing</td><td>Flashing</td><td rowspan="2"></td></tr>
<tr><td>Error (Overheat)</td><td>Flashing</td><td>Steady Light</td></tr>
</table>

Maintenance

General Precautions

- Make sure the projector is turned off and the power cable is unplugged from the power outlet.
- Never remove any parts from the projector. Contact ViewSonic® or a reseller when any part of the projector needs replacing.
- Never spray or pour any liquid directly onto the case.
- Handle the projector with care, as a darker-colored projector, if scuffed, may show marks more clearly than a lighter-colored projector.

Cleaning the Lens

- Use a canister of compressed air to remove dust.
- If the lens is still not clean, use lens-cleaning paper or moisten a soft cloth with lens cleaner and gently wipe the surface.

CAUTION: Never rub the lens with abrasive materials.

Cleaning the Case

- Use a soft, lint-free, dry cloth to remove dirt or dust.
- If the case is still not clean, apply a small amount of non-ammonia, non-alcohol based, mild non-abrasive detergent onto a clean, soft, lint-free cloth, then wipe the surface.

CAUTION: Never use wax, alcohol, benzene, thinner, or other chemical detergents.

Storing the Projector

If you intend to store the projector for an extended period of time:

- Ensure the temperature and humidity of the storage area are within the recommend range.
- Retract the adjuster foot completely.
- Remove the batteries from the remote control.
- Pack the projector in its original packaging or equivalent.

Disclaimer

- ViewSonic® does not recommend the use of any ammonia or alcohol-based cleaners on the lens or case. Some chemical cleaners have been reported to damage the lens and/or case of the projector.
- ViewSonic® will not be liable for damage resulting from use of any ammonia or alcohol-based cleaners.

Regulatory and Service Information

Compliance Information

This section addresses all connected requirements and statements regarding regulations. Confirmed corresponding applications shall refer to nameplate labels and relevant markings on the unit.

FCC Compliance Statement

This device complies with part 15 of FCC Rules. Operation is subject to the following two conditions: (1) this device may not cause harmful interference, and (2) this device must accept any interference received, including interference that may cause undesired operation. This equipment has been tested and found to comply with the limits for a Class B digital device, pursuant to part 15 of the FCC Rules.

These limits are designed to provide reasonable protection against harmful interference in a residential installation. This equipment generates, uses, and can radiate radio frequency energy, and if not installed and used in accordance with the instructions, may cause harmful interference to radio communications. However, there is no guarantee that interference will not occur in a particular installation. If this equipment does cause harmful interference to radio or television reception, which can be determined by turning the equipment off and on, the user is encouraged to try to correct the interference by one or more of the following measures:

- Reorient or relocate the receiving antenna.
- Increase the separation between the equipment and receiver.
- Connect the equipment into an outlet on a circuit different from that to which the receiver is connected.
- Consult the dealer or an experienced radio/TV technician for help.

Warning: You are cautioned that changes or modifications not expressly approved by the party responsible for compliance could void your authority to operate the equipment.

Industry Canada Statement

This Class B digital apparatus complies with Canadian ICES-003.

Cet appareil numérique de classe B est conforme à la norme NMB-003 du Canada.

CAN ICES (B) / NMB (B)

CE Conformity for European Countries

The device complies with the EMC Directive 2014/30/EU and Low Voltage Directive 2014/35/EU. Ecodesign Directive 2009/125/EC.

The following information is only for EU-member states:

The mark shown to the right is in compliance with the Waste Electrical and Electronic Equipment Directive 2012/19/EU (WEEE). The mark indicates the requirement NOT to dispose of the equipment as unsorted municipal waste, but use the return and collection systems according to local law.

Declaration of RoHS2 Compliance

This product has been designed and manufactured in compliance with Directive 2011/65/EU of the European Parliament and the Council on restriction of the use of certain hazardous substances in electrical and electronic equipment (RoHS2 Directive) and is deemed to comply with the maximum concentration values issued by the European Technical Adaptation Committee (TAC) as shown below:

Substance	Proposed Maximum Concentration	Actual Concentration
Lead (Pb)	0.1%	< 0.1%
Mercury (Hg)	0.1%	< 0.1%
Cadmium (Cd)	0.01%	< 0.01%
Hexavalent Chromium ($Cr6^{+}$)	0.1%	< 0.1%
Polybrominated biphenyls (PBB)	0.1%	< 0.1%
Polybrominated diphenyl ethers (PBDE)	0.1%	< 0.1%
Bis (2-ethylhexyl) phthalate (DEHP)	0.1%	< 0.1%
Butyl benzyl phthalate (BBP)	0.1%	< 0.1%
Dibutyl phthalate (DBP)	0.1%	< 0.1%
Diisobutyl phthalate (DIBP)	0.1%	< 0.1%

Certain components of products as stated above are exempted under the Annex III of the RoHS2 Directives as noted below. Examples of exempted components are:

- Mercury in cold cathode fluorescent lamps and external electrode fluorescent lamps (CCFL and EEFL) for special purposes not exceeding (per lamp):
  - » Short length (500 mm): maximum 3.5 mg per lamp.
  - » Medium length (> 500 mm and 1,500 mm): maximum 5 mg per lamp.
  - » Long length (> 1,500 mm): maximum 13 mg per lamp.
- Lead in glass of cathode ray tubes.
- Lead in glass of fluorescent tubes not exceeding 0.2% by weight.
- Lead as an alloying element in aluminum containing up to 0.4% lead by weight.
- Copper alloy containing up to 4% lead by weight.
- Lead in high melting temperature type solders (i.e. lead-based alloys containing 85% by weight or more lead).
- Electrical and electronic components containing lead in a glass or ceramic other than dielectric ceramic in capacitors, e.g. piezoelectronic devices, or in a glass or ceramic matrix compound.

Indian Restriction of Hazardous Substances

Restriction on Hazardous Substances statement (India). This product complies with the “India E-waste Rule 2011” and prohibits use of lead, mercury, hexavalent chromium, polybrominated biphenyls or polybrominated diphenyl ethers in concentrations exceeding 0.1 weight % and 0.01 weight % for cadmium, except for the exemptions set in Schedule 2 of the Rule.

Product Disposal at End of Product Life

ViewSonic® respects the environment and is committed to working and living green. Thank you for being part of Smarter, Greener Computing. Please visit the ViewSonic® website to learn more.

USA & Canada:

https://www.viewsonic.com/us/go-green-with-viewsonic

Europe:

https://www.viewsonic.com/eu/environmental-social-governance/recycle

Taiwan:

https://recycle.moenv.gov.tw/

For EU users, please contact us for any safety/accident issue experienced with this product:

ViewSonic Europe Limited
Haaksbergweg 75
1101 BR Amsterdam
Netherlands

+31 (0) 650608655

EPREL@viewsoniceurope.com

https://www.viewsonic.com/eu/

Copyright Information

Copyright© ViewSonic® Corporation, 2024. All rights reserved.

Macintosh and Power Macintosh are registered trademarks of Apple Inc.

Microsoft, Windows, and the Windows logo are registered trademarks of Microsoft Corporation in the United States and other countries.

ViewSonic® and the three birds logo are registered trademarks of ViewSonic® Corporation.

VESA is a registered trademark of the Video Electronics Standards Association. DPMS, DisplayPort, and DDC are trademarks of VESA.

ENERGY STAR® is a registered trademark of the U.S. Environmental Protection Agency (EPA).

As an ENERGY STAR® partner, ViewSonic® Corporation has determined that this product meets the ENERGY STAR® guidelines for energy efficiency.

Disclaimer: ViewSonic® Corporation shall not be liable for technical or editorial errors or omissions contained herein; nor for incidental or consequential damages resulting from furnishing this material, or the performance or use of this product.

In the interest of continuing product improvement, ViewSonic® Corporation reserves the right to change product specifications without notice. Information in this document may change without notice.

No part of this document may be copied, reproduced, or transmitted by any means, for any purpose without prior written permission from ViewSonic® Corporation.

LS901HD_LS901-4K_UG_ENG_1a_20240816

Customer Service

For technical support or product service, see the table below or contact your reseller.

NOTE: You will need the product's serial number.

Country/ Region	Website	Country/ Region	Website
Asia Pacific & Africa			
Australia	www.viewsonic.com/au/	Bangladesh	www.viewsonic.com/bd/
中国 (China)	www.viewsonic.com.cn	香港 (繁體中文)	www.viewsonic.com/hk/
Hong Kong (English)	www.viewsonic.com/hk-en/	India	www.viewsonic.com/in/
Indonesia	www.viewsonic.com/id/	Israel	www.viewsonic.com/il/
日本 (Japan)	www.viewsonic.com/jp/	Korea	www.viewsonic.com/kr/
Malaysia	www.viewsonic.com/my/	Middle East	www.viewsonic.com/me/
Myanmar	www.viewsonic.com/mm/	Nepal	www.viewsonic.com/np/
New Zealand	www.viewsonic.com/nz/	Pakistan	www.viewsonic.com/pk/
Philippines	www.viewsonic.com/ph/	Singapore	www.viewsonic.com/sg/
臺灣 (Taiwan)	www.viewsonic.com/tw/	ประเทศไทย	www.viewsonic.com/th/
Việt Nam	www.viewsonic.com/vn/	South Africa & Mauritius	www.viewsonic.com/za/
Americas			
United States	www.viewsonic.com/us	Canada	www.viewsonic.com/us
Latin America	www.viewsonic.com/la		
Europe			
Europe	www.viewsonic.com/eu/	France	www.viewsonic.com/fr/
Deutschland	www.viewsonic.com/de/	Қазақстан	www.viewsonic.com/kz/
Россия	www.viewsonic.com/ru/	España	www.viewsonic.com/es/
Türkiye	www.viewsonic.com/tr/	Україна	www.viewsonic.com/ua/
United Kingdom	www.viewsonic.com/uk/		

Limited Warranty

ViewSonic® Projector

What the warranty covers:

ViewSonic® warrants its products to be free from defects in material and workmanship, under normal use, during the warranty period. If a product proves to be defective in material or workmanship during the warranty period, ViewSonic® will, at its sole option, repair or replace the product with a like product. Replacement product or parts may include remanufactured or refurbished parts or components.

Limited Three (3) year General Warranty:

Subject to the more limited one (1) year warranty set out below, North and South America: Three (3) years warranty for all parts excluding the lamp, three (3) years for labor, and one (1) year for the original lamp from the date of the first consumer purchase.

Other regions or countries: Please check with your local dealer or local ViewSonic® office for the warranty information.

Limited One (1) year Heavy Usage Warranty:

Under heavy usage settings, where a projector's use includes more than fourteen (14) hours average daily usage, North and South America: One (1) year warranty for all parts excluding the lamp, one (1) year for labor, and ninety (90) days for the original lamp from the date of the first consumer purchase; Europe: One (1) year warranty for all parts excluding the lamp, one (1) year for labor, and ninety (90) days for the original lamp from the date of the first consumer purchase. Other regions or countries: Please check with your local dealer or local ViewSonic® office for the warranty information. Lamp warranty subject to terms and conditions, verification and approval. Applies to manufacturer's installed lamp only. All accessory lamps purchased separately are warranted for 90 days.

Who the warranty protects:

This warranty is valid only for the first consumer purchaser.

What the warranty does not cover:

1. Any product on which the serial number has been defaced, modified, or removed.
2. Damage, deterioration, or malfunction resulting from:
   - » Accident, misuse, neglect, fire, water, lightning, or other acts of nature, unauthorized product modification, or failure to follow instructions supplied with the product.
   - » Operation outside of product specifications.
   - » Operation of the product for other than the normal intended use or not under normal conditions.
   - » Repair or attempted repair by anyone not authorized by ViewSonic®.
   - » Any damage of the product due to shipment.
   - » Removal or installation of the product.
   - » Causes external to the product, such as electric power fluctuations or failure.
   - » Use of supplies or parts not meeting Viewsonic's specifications.
   - » Normal wear and tear.
   - » Any other cause which does not relate to a product defect.
3. Removal, installation, and set-up service charges.

How to get service:

1. For information about receiving service under warranty, contact ViewSonic® Customer Support (Please refer to the "Customer Support" page). You will need to provide your product's serial number.
2. To obtain warranted service, you will be required to provide: (a) the original dated sales slip, (b) your name, (c) your address, (d) a description of the problem, and (e) the serial number of the product.
3. Take or ship the product, freight prepaid, in the original container to an authorized ViewSonic® service center or ViewSonic®.
4. For additional information or the name of the nearest ViewSonic® service center, contact ViewSonic®.

Limitation of implied warranties:

There are no warranties, express or implied, which extend beyond the description contained herein including the implied warranty of merchantability and fitness for a particular purpose.

Exclusion of damages:

ViewSonic's liability is limited to the cost of repair or replacement of the product. ViewSonic® shall not be liable for:

1. Damage to other property caused by any defects in the product, damages based upon inconvenience, loss of use of the product, loss of time, loss of profits, loss of business opportunity, loss of goodwill, interference with business relationships, or other commercial loss, even if advised of the possibility of such damages.
2. Any other damages, whether incidental, consequential or otherwise.
3. Any claim against the customer by any other party.

Effect of state law:

This warranty gives you specific legal rights, and you may also have other rights which vary from local authority. Some local governments do not allow limitations on implied warranties and/or do not allow the exclusion of incidental or consequential damages, so the above limitations and exclusions may not apply to you.

Sales outside the U.S.A. and Canada:

For warranty information and service on ViewSonic® products sold outside of the U.S.A. and Canada, contact ViewSonic® or your local ViewSonic® dealer.

The warranty period for this product in mainland China (Hong Kong, Macao, and Taiwan Excluded) is subject to the terms and conditions of the Maintenance Guarantee Card.

For users in Europe and Russia, full details of warranty provided can be found at: http://www.viewsonic.com/eu/ under "Support/Warranty Information".

Projector Warranty Term Template In UG

VSC_TEMP_2005

Mexico Limited Warranty

ViewSonic® Projector

What the warranty covers:

ViewSonic® warrants its products to be free from defects in material and workmanship, under normal use, during the warranty period. If a product proves to be defective in material or workmanship during the warranty period, ViewSonic® will, at its sole option, repair or replace the product with a like product. Replacement product or parts may include remanufactured or refurbished parts or components & accessories.

How long the warranty is effective:

3 years for all parts excluding the lamp, 3 years for labor, 1 year for the original lamp from the date of the first consumer purchase.

Lamp warranty subject to terms and conditions, verification and approval. Applies to manufacturer's installed lamp only.

All accessory lamps purchased separately are warranted for 90 days.

Who the warranty protects:

This warranty is valid only for the first consumer purchaser.

What the warranty excludes and does not cover:

1. Any product on which the serial number has been defaced, modified or removed.

2. Damage, deterioration, or malfunction resulting from:

- » Accident, misuse, neglect, fire, water, lightning, or other acts of nature, unauthorized product modification, unauthorized attempted repair, or failure to follow instructions supplied with the product.
- » Any damage of the product due to shipment.
- » Causes external to the product, such as electrical power fluctuations or failure.
- » Use of supplies or parts not meeting ViewSonic®'s specifications.
- » Normal wear and tear.
- » Any other cause which does not relate to a product defect.

3. Any product exhibiting a condition commonly known as "image burn-in" which results when a static image is displayed on the product for an extended period of time.

4. Removal, installation, insurance, and set-up service charges.

How to get service:

For information about receiving service under warranty, contact ViewSonic® Customer Support (Please refer to the attached "Customer Service" page). You will need to provide your product's serial number, so please record the product information in the space provided below on your purchase for your future use. Please retain your receipt of proof of purchase to support your warranty claim.

For Your Records

Product Name: _____ Model Number: _____

Document Number: _____ Serial Number: _____

Purchase Date: _____ Extended Warranty Purchase? _____(Y/N)

If so, what date does warranty expire? _____

1. To obtain warranty service, you will be required to provide (a) the original dated sales slip, (b) your name, (c) your address, (d) a description of the problem, and (e) the serial number of the product.
2. Take or ship the product, in the original container packaging, to an authorized ViewSonic® service center.
3. Round trip transportation costs for in-warranty products will be paid by ViewSonic®.

Limitation of implied warranties:

There are no warranties, express or implied, which extend beyond the description contained herein including the implied warranty of merchantability and fitness for a particular purpose.

Exclusion of damages:

ViewSonic®'s liability is limited to the cost of repair or replacement of the product. ViewSonic® shall not be liable for:

1. Damage to other property caused by any defects in the product, damages based upon inconvenience, loss of use of the product, loss of time, loss of profits, loss of business opportunity, loss of goodwill, interference with business relationships, or other commercial loss, even if advised of the possibility of such damages.
2. Any other damages, whether incidental, consequential or otherwise.
3. Any claim against the customer by any other party.
4. Repair or attempted repair by anyone not authorized by ViewSonic®.

Contact Information for Sales & Authorized Service (Centro Autorizado de Servicio) within Mexico:	
Name, address, of manufacturer and importers: México, Av. de la Palma #8 Piso 2 Despacho 203, Corporativo Interpalmas, Col. San Fernando Huixquilucan, Estado de México Tel: (55) 3605-1099 http://www.viewsonic.com/la/soporte/index.htm	
NÚMERO GRATIS DE ASISTENCIA TÉCNICA PARA TODO MÉXICO: 001.866.823.2004	
Hermosillo: Distribuciones y Servicios Computacionales SA de CV. Calle Juarez 284 local 2 Col. Bugambilias C.P: 83140 Tel: 01-66-22-14-9005 E-Mail: disc2@hmo.megared.net.mx	***Villahermosa:*** Compumantenimietnos Garantizados, S.A. de C.V. AV. GREGORIO MENDEZ #1504 COL, FLORIDA C.P. 86040 Tel: 01 (993) 3 52 00 47 / 3522074 / 3 52 20 09 E-Mail: compumantenimientos@prodigy.net.mx
Puebla, Pue. (Matriz): RENTA Y DATOS, S.A. DE C.V. Domicilio: 29 SUR 721 COL. LA PAZ 72160 PUEBLA, PUE. Tel: 01(52).222.891.55.77 CON 10 LINEAS E-Mail: datos@puebla.megared.net.mx	***Veracruz, Ver.:*** CONEXION Y DESARROLLO, S.A DE C.V. Av. Americas # 419 ENTRE PINZÓN Y ALVARADO Fracc. Reforma C.P. 91919 Tel: 01-22-91-00-31-67 E-Mail: gacosta@qplus.com.mx
Chihuahua: Soluciones Globales en Computación C. Magisterio # 3321 Col. Magisterial Chihuahua, Chih. Tel: 4136954 E-Mail: Cefeo@soluglobales.com	***Cuernavaca:*** Compusupport de Cuernavaca SA de CV Francisco Leyva # 178 Col. Miguel Hidalgo C.P. 62040, Cuernavaca Morelos Tel: 01 777 3180579 / 01 777 3124014 E-Mail: aquevedo@compusupportcva.com
Distrito Federal: QPLUS, S.A. de C.V. Av. Coyoacán 931 Col. Del Valle 03100, México, D.F. Tel: 01(52)55-50-00-27-35 E-Mail : gacosta@qplus.com.mx	***Guadalajara, Jal.:*** SERVICRECE, S.A. de C.V. Av. Niños Héroes # 2281 Col. Arcos Sur, Sector Juárez 44170, Guadalajara, Jalisco Tel: 01(52)33-36-15-15-43 E-Mail: mmiranda@servicrece.com
Guerrero Acapulco: GS Computación (Grupo Sesicomp) Progreso #6-A, Colo Centro 39300 Acapulco, Guerrero Tel: 744-48-32627	***Monterrey:*** Global Product Services Mar Caribe # 1987, Esquina con Golfo Pérsico Fracc. Bernardo Reyes, CP 64280 Monterrey N.L. México Tel: 8129-5103 E-Mail: aydeem@gps1.com.mx
MERIDA: ELECTROSER Av Reforma No. 403Gx39 y 41 Mérida, Yucatán, México CP97000 Tel: (52) 999-925-1916 E-Mail: rrrb@sureste.com	***Oaxaca, Oax.:*** CENTRO DE DISTRIBUCION Y SERVICIO, S.A. de C.V. Murguía # 708 P.A., Col. Centro, 68000, Oaxaca Tel: 01(52)95-15-15-22-22 Fax: 01(52)95-15-13-67-00 E-Mail. gpotai2001@hotmail.com
Tijuana: STD Av Ferrocarril Sonora #3780 L-C Col 20 de Noviembr Tijuana, Mexico	***FOR USA SUPPORT:*** ViewSonic® Corporation 381 Brea Canyon Road, Walnut, CA. 91789 USA Tel: 800-688-6688 E-Mail: http://www.viewsonic.com

Projector Mexico Warranty Term Template In UG
VSC_TEMP_2006

ViewSonic®