VX2758A-2K-PRO-3

Display
User Guide

IMPORTANT: Please read this User Guide to obtain important information on installing and using your product in a safe manner, as well as registering your product for future service. Warranty information contained in this User Guide will describe your limited coverage from ViewSonic® Corporation, which is also found on our web site at http://www.viewsonic.com in English, or in specific languages using the Regional selection box of our website.

Model No. VS20058
P/N: VX2758A-2K-PRO-3

Thank you for choosing ViewSonic®

As a world-leading provider of visual solutions, ViewSonic® is dedicated to exceeding the world's expectations for technological evolution, innovation, and simplicity. At ViewSonic®, we believe that our products have the potential to make a positive impact in the world, and we are confident that the ViewSonic® product you have chosen will serve you well.

Once again, thank you for choosing ViewSonic®!

Safety Precautions

- Read these instructions completely before using the equipment.
- Keep these instructions in a safe place.
- Heed all warnings and follow all instructions.
- Sit at least 18” / 45 cm from the monitor.
- When installing the monitor, please leave 4” / 10 cm of open space around the monitor for ventilation safety purposes.
- Always handle the display with care when moving it.
- Always use cabinets or stands or installation methods recommended by the manufacturer of the monitor set.
- Always use furniture that can safely support the monitor.
- Always ensure the monitor is not overhanging the edge of the supporting furniture.
- Do not place the monitor where children are likely to be present.
- Always educate children about the dangers of climbing on furniture to reach the monitor or related equipment.
- Always route and manage cords and cables connected to your monitor so they cannot be tripped over, pulled, or grabbed.
- Exercise caution when removing the rear cover of the monitor. This monitor contains high-voltage parts.
- Do not use this equipment near water. To reduce the risk of fire or electric shock, do not expose the monitor to rain or moisture.
- Avoid exposing the monitor to direct sunlight or other sources of sustained heat. Do not install near any heat sources such as radiators, heat registers, stoves, or other devices (including amplifiers) that may increase the temperature of the monitor to dangerous levels.
- Clean with a soft, dry cloth. If further cleaning is required, see the “Maintenance” section in this guide for further instructions.
- Avoid touching the screen. Skin oils are difficult to remove.
- Do not touch, rub, or apply pressure to the monitor screen, as it may permanently damage the screen.
- Do not place the monitor in an unstable location.
- Do not place the monitor on tall furniture (for example, cupboards or bookcases) without anchoring both the furniture and the monitor to a suitable support.
- Do not place the monitor on cloth or other materials that may be located between the product and supporting furniture.

- Place the monitor in a well-ventilated area. Do not place anything on the display that prevents heat dissipation.
- Do not place heavy objects on the display, video cable, or power cord.
- Do not place items that might tempt children to climb, such as toys and remote controls, on the top of the monitor or furniture on which the product is placed.
- If smoke appears, an abnormal noise, or a strange odor is present, immediately switch the display off and contact your dealer or ViewSonic. It is dangerous to continue using the display.
- Do not attempt to circumvent the safety provisions of the polarized or grounding-type plug. A polarized plug has two blades with one wider than the other. A grounding type plug has two blades and a third grounding prong. The wide blade and the third prong are provided for your safety. If the plug does not fit into your outlet, obtain an adaptor and do not attempt to force the plug into the outlet.
- Please confirm the distribution system installed in the building. The system should provide a circuit breaker rated at 120/240V, 20A.
- When connecting to a power outlet, DO NOT remove the grounding prong. Please ensure grounding prongs are NEVER REMOVED.
- Protect the power cord from being treaded upon or pinched, particularly at the plug, and at the point where it emerges from the equipment. Be sure that the power outlet is located near the equipment so that it is easily accessible.
- Only use attachments/accessories specified by the manufacturer.
- Use only with the cart, stand, tripod, bracket, or table specified by the manufacturer, or sold with the equipment. When a cart is used, use with caution when moving the cart/equipment combination to avoid injury from tipping over.
- Unplug this equipment when it will be unused for long periods of time.
- Refer all servicing to qualified service personnel. Service will be required when the unit has been damaged in any way, such as: if the power-supply cord or plug is damaged, if liquid is spilled onto or objects fall into the unit, if the unit is exposed to rain or moisture, or if the unit does not operate normally or has been dropped.
- Excessive sound volume from ear-/headphones may cause hearing damage/ hearing loss.
- Adjustment of the volume control as well as the equalizer may increase the ear-/ headphones output voltage and therefore, the sound volume level.
- The factors influencing the ear-/headphones output other than those specified by the manufacturer (e.g. operating system, equalizer software, firmware, driver) may increase the ear-/headphone output voltage and therefore, the sound volume level.

- Stability Hazard: The display may fall, causing serious personal injury or death. To prevent injury, this display must be securely attached to the floor/wall in accordance with the installation instructions.
- Fastening the monitor to a wall or fixed object using cordage or other restraining devices can help support the weight of the monitor in order to prevent the monitor from falling over.

Hole pattern (W x H)	Interface Pad (W x H x D)	Pad Hole	Screw Specification	Screw Quantity
100 x 100 mm	115 x 115 x 2.6 mm	Ø 5 mm	M4 x 10 mm	4 screws

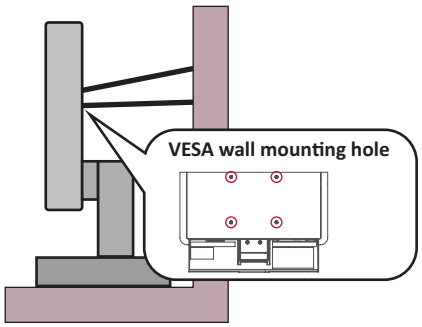

NOTE:

- Restraining device/cordage should be able to withstand 100N force.
- Make sure the cordage is straightened, and any slack is removed. The back of the device shall face the wall to ensure the device cannot tilt under external force.
- Make sure the monitor does not tilt under external force at any height and rotation angle of the device.

- If the existing monitor is going to be retained and relocated, the same considerations as above should be applied.

Contents

Safety Precautions 3

Contents 6

Introduction 8

Package Contents 8

Product Overview 9

Front and Rear View 9

I/O Ports 9

Initial Setup 10

Installing the Stand 10

Removing the Stand and Mounting the Monitor 11

Using the Security Slot 13

Making Connections 14

Connecting to Power 14

Connecting to External Devices 15

Using the Monitor 16

Adjusting the Viewing Angle 16

Tilt Angle Adjustment 16

Turning the Monitor On/Off 17

Quick Menu 18

Hot Keys 19

Configuring the Settings 21

General Operations 21

On-Screen Display (OSD) Menu Tree 23

Appendix 27
Specifications 27
Glossary 30
Troubleshooting 34
Maintenance 36
General Precautions 36
Cleaning the Screen 36
Cleaning the Case 36
Blue Light Filter and Eye Health 37
Calculating Breaks 37
Looking at Distant Objects 37
Eye and Neck Exercises 37
Regulatory and Service Information 38
Compliance Information 38
FCC Compliance Statement 38
Industry Canada Statement 38
CE Conformity for European Countries 38
Declaration of RoHS2 Compliance 39
Indian Restriction of Hazardous Substances 40
Product Disposal at End of Product Life 40
Copyright Information 41
Customer Service 42
Limited Warranty 43
Mexico Limited Warranty 46

Introduction

Package Contents

- Monitor
- Power cord
- Video cable
- Quick start guide

NOTE: The power cord and video cables included in your package may vary depending on your country. Please contact your local reseller for more information.

Product Overview

Front and Rear View

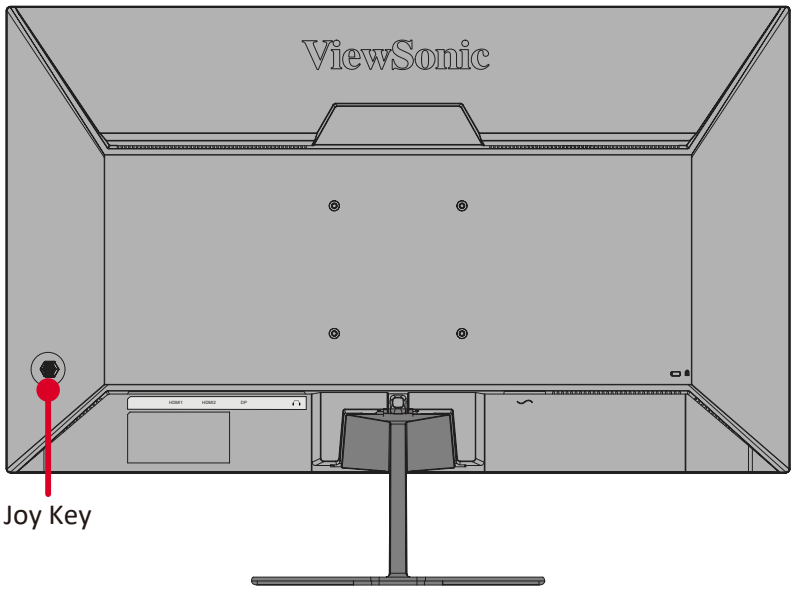

I/O Ports

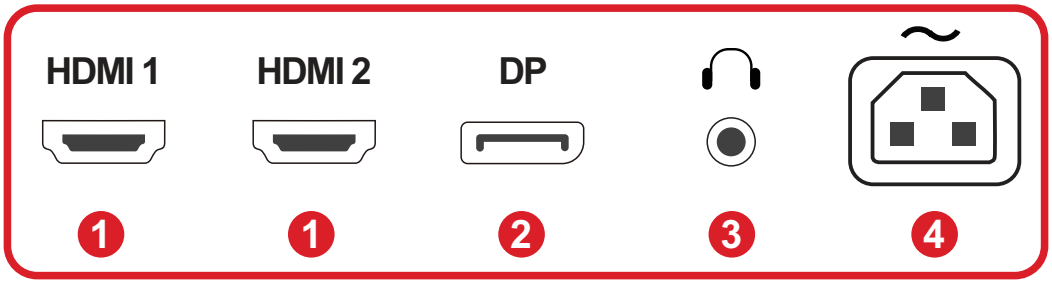

1. HDMI **2.** DisplayPort **3.** Audio Out **4.** AC IN

NOTE: For more information about the **Joy Key** and its functions, refer to “Hot Keys” on page 19.

Initial Setup

Installing the Stand

1

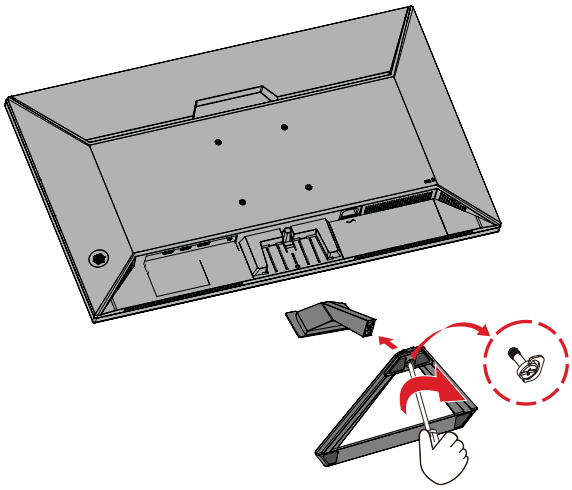

2

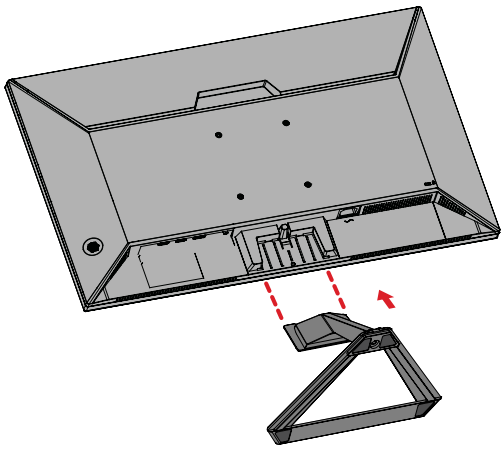

3

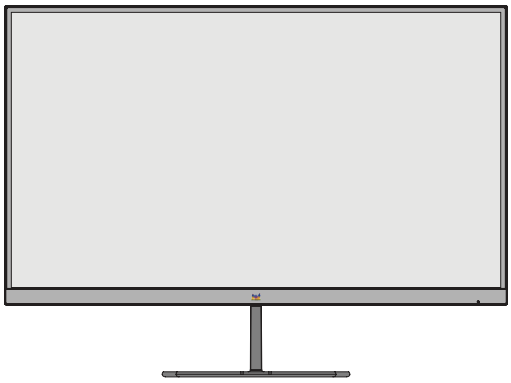

NOTE: Always place the device on a flat, stable surface. Failure to do so may cause the device to fall and damage the device and/or result in personal injury.

Removing the Stand and Mounting the Monitor

Refer to the table below for the standard dimensions for mounting kits.

NOTE: For use only with a UL certified mounting kit/bracket. To obtain a wall mounting kit or height adjustment base, contact ViewSonic® or your local dealer.

Maximum Loading	Hole pattern (W x H)	Interface Pad (W x H x D)	Pad Hole	Screw Specification	Screw Quantity
14 kg	100 x 100 mm	115 x 115 x 2.6 mm	Ø 5 mm	M4 x 10 mm	4 screws

NOTE: Mounting kits are sold separately.

1. Turn off the monitor and disconnect all cables.

2. Place the monitor on a flat, stable surface with the screen facing down.

3. Remove the stand.

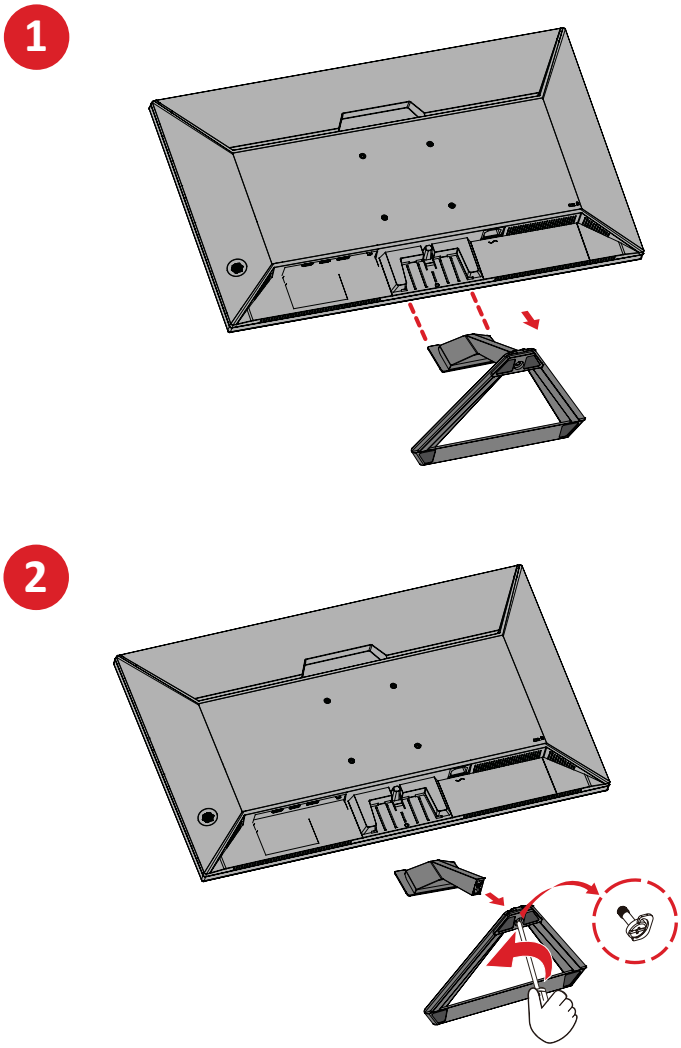

4. Attach the mounting bracket to the VESA mounting holes at the rear of the monitor. Then secure it with four screws (M4 x 10 mm).

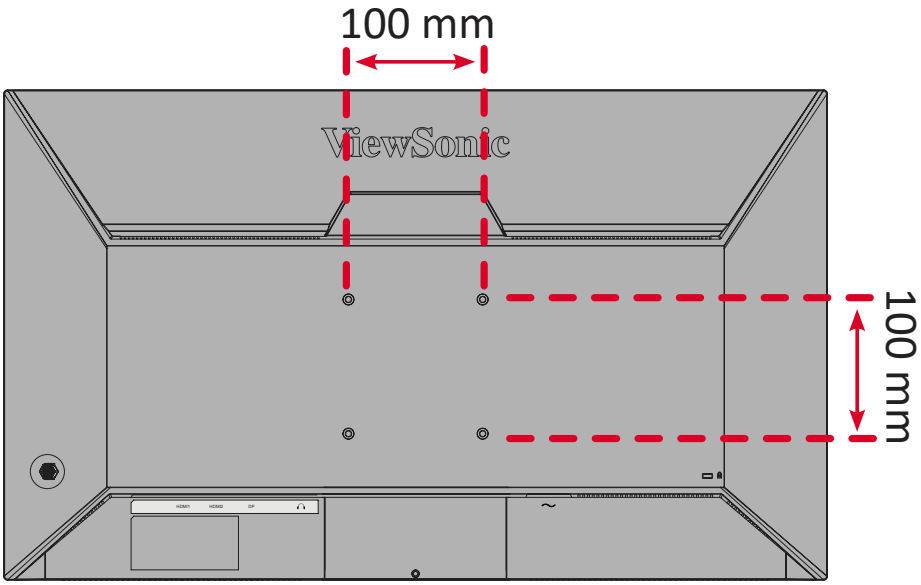

5. Follow the instructions that come with the mounting kit to mount the monitor.

Using the Security Slot

To help prevent the monitor from being stolen, use a security slot locking device to secure the monitor to a fixed object.

Additionally, fastening the monitor to a wall or fixed object using a security cable can help support the weight of the monitor in order to prevent the monitor from falling over.

Below is an example of setting up a security slot locking device on a table.

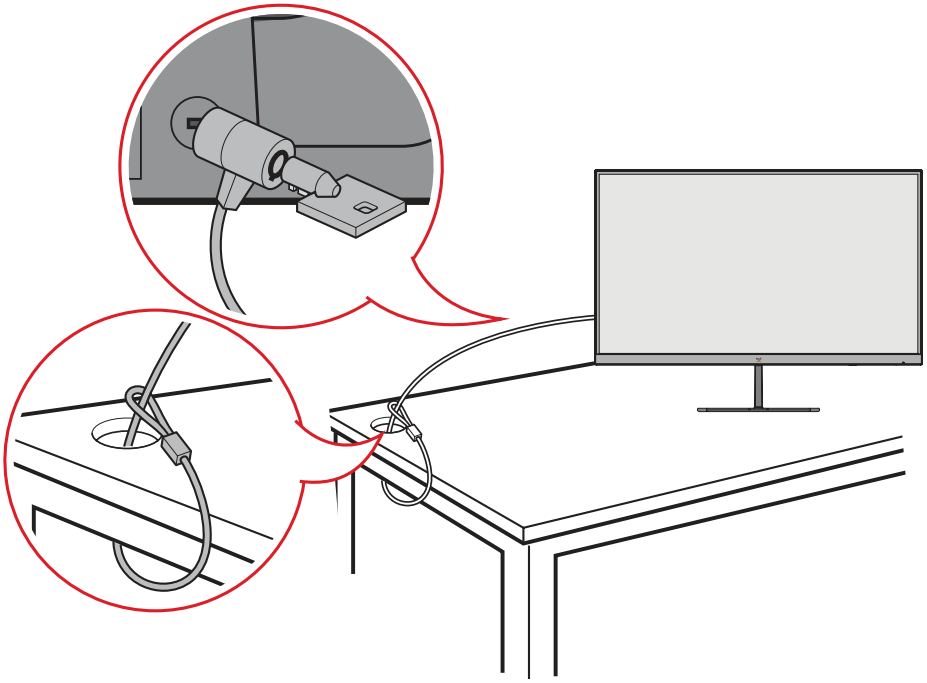

Making Connections

Connecting to Power

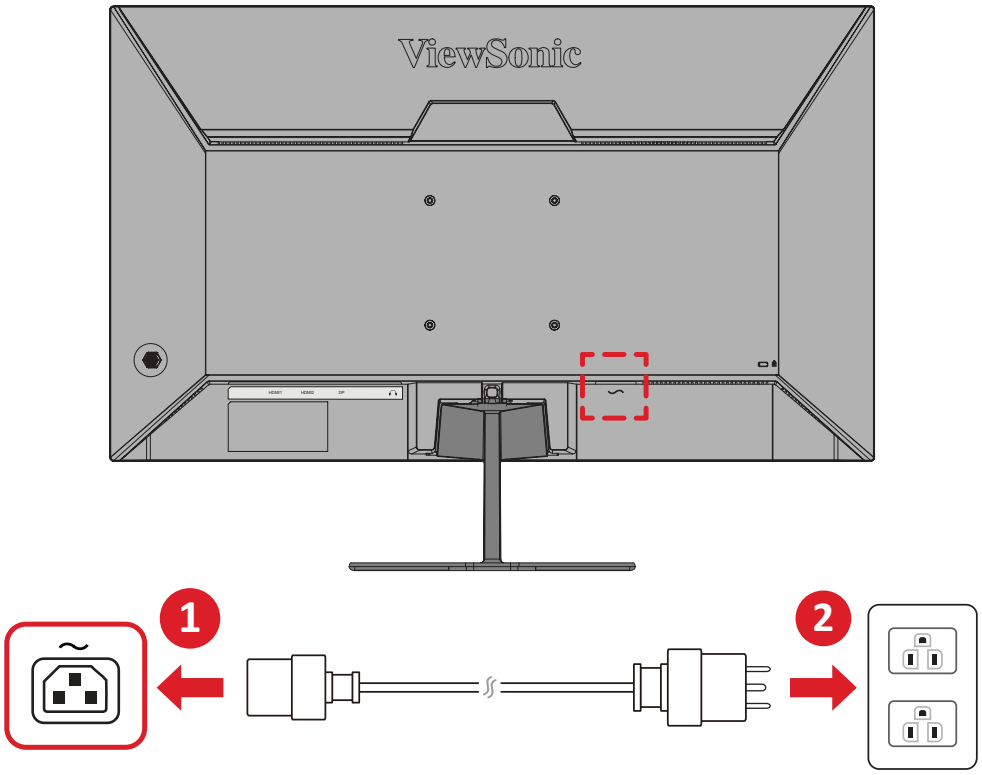

1. Connect the power cord to the AC IN jack at the rear of the monitor.

2. Plug the power cord plug into a power outlet.

Connecting to External Devices

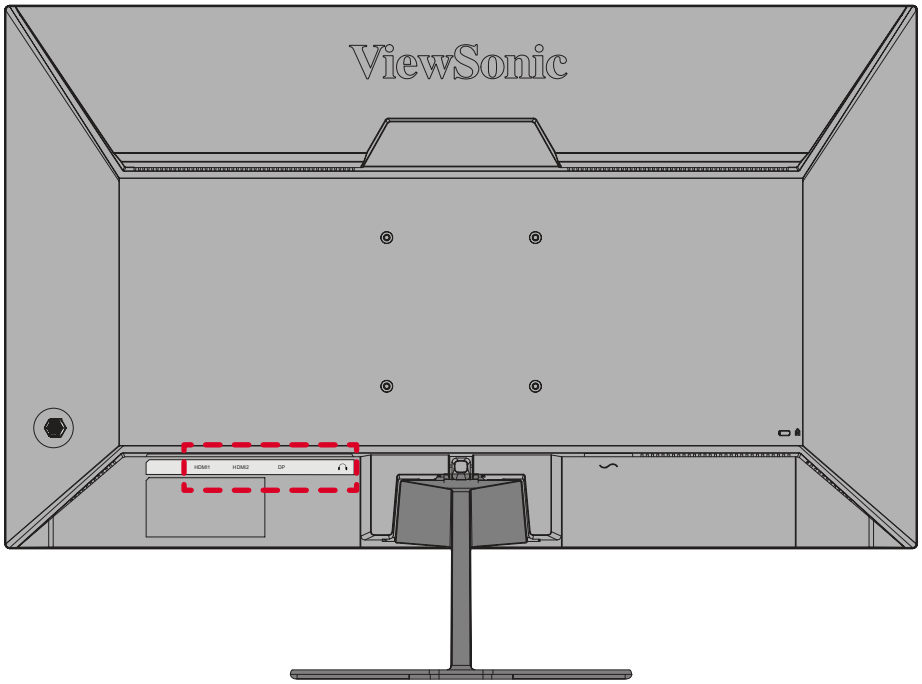

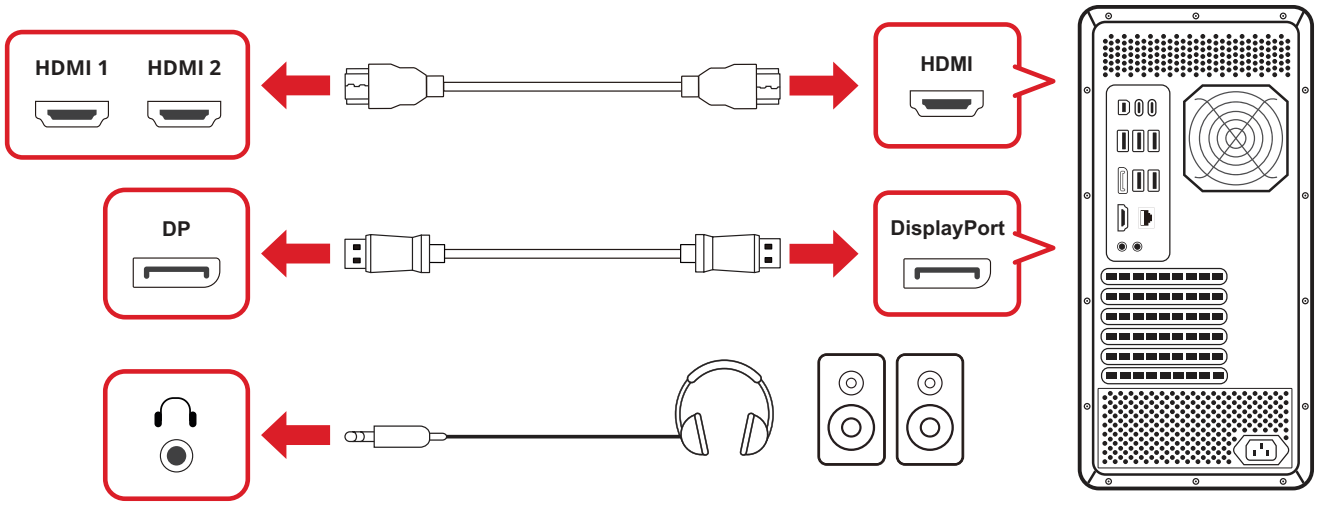

Using the Monitor

Adjusting the Viewing Angle

Tilt Angle Adjustment

Tilt the monitor forwards or backwards to the desired viewing angle (-7˚ to 20˚).

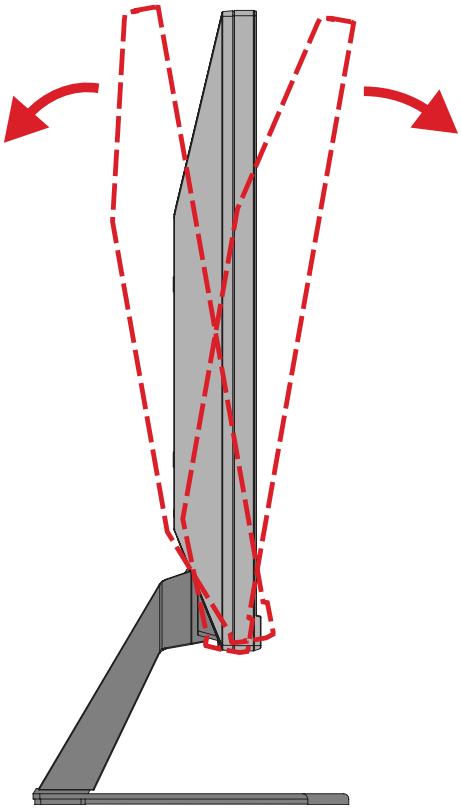

NOTE: When adjusting, support the stand firmly with one hand while tilting the monitor forwards or backwards with the other hand.

Turning the Monitor On/Off

1. Plug the power cord into a power outlet.

2. Press the **Power** button to turn on the monitor.

3. To turn the monitor off, press the **Power** button again.

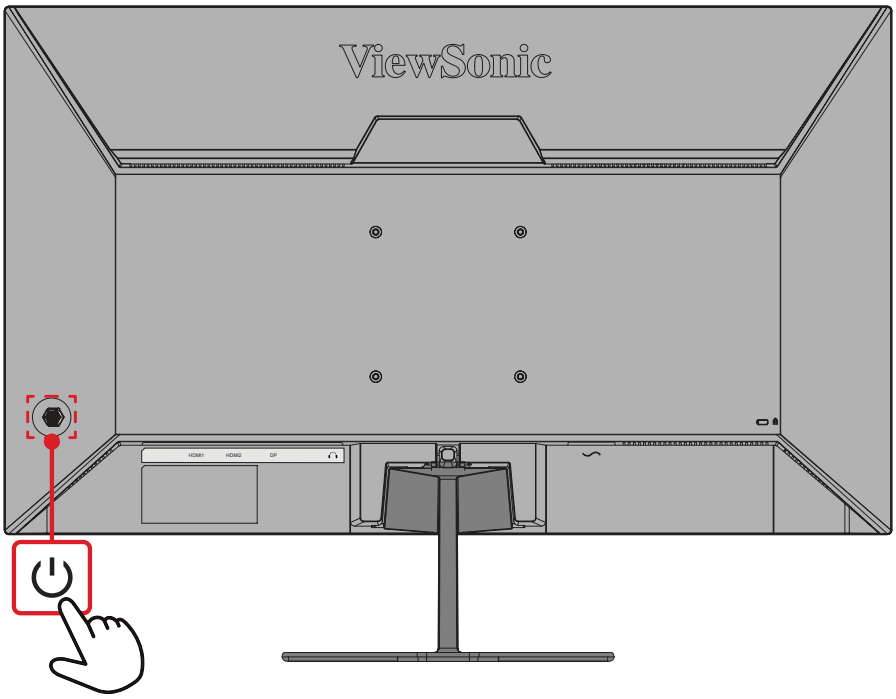

NOTE: The monitor will still consume some power as long as the power cord is connected to the power outlet. If the monitor is not being used for a long period of time, please disconnect the power plug from the power outlet.

Using the Joy Key

Use the **Joy Key** to access the Quick Menu, activate Hot Keys, navigate the On-Screen Display (OSD) Menu, and change settings.

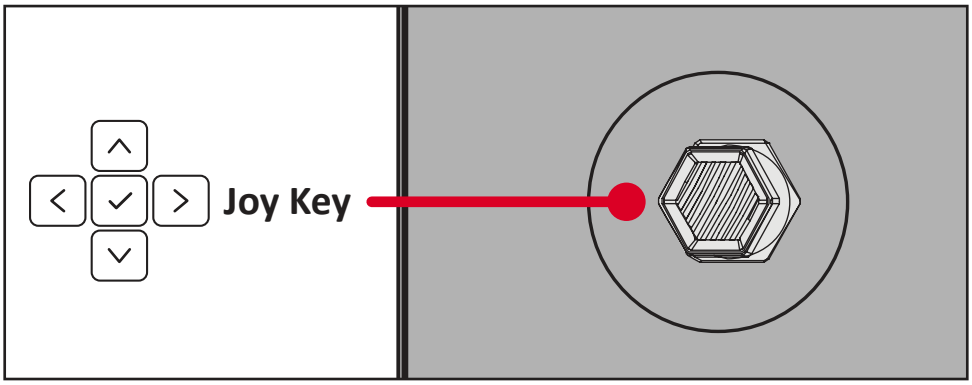

Quick Menu

Press the **Joy Key** ✓ to activate the Quick Menu.

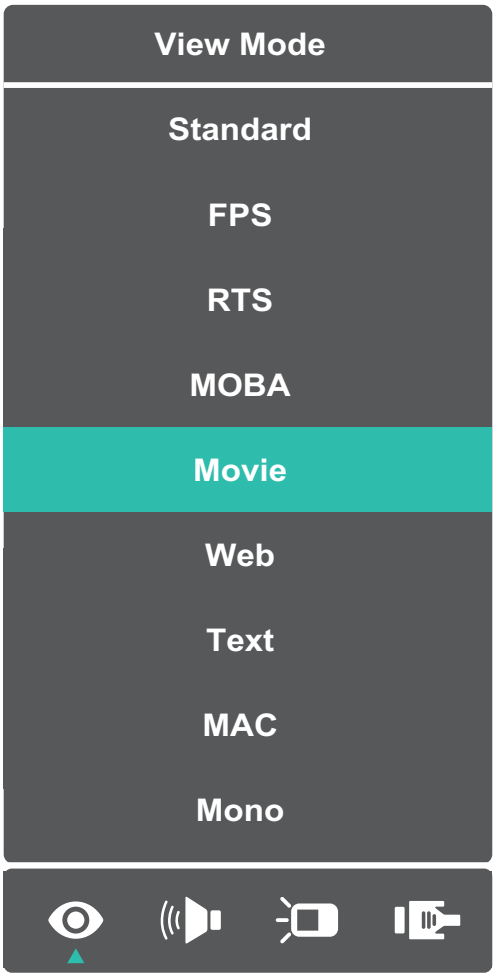

NOTE: Follow the key guide that appears on the screen to select the option or make adjustments.

Menu	Description
ViewMode	Select one of the preset color settings.
Volume	Adjust the level, or mute the volume.
Contrast/Brightness	Adjust the contrast or brightness level.
Input Select	Select the input source.
Exit	Exit the Quick Menu.

Hot Keys

When the On-Screen Display (OSD) Menu is off, you can quickly access special functions by using the **Joy Key**.

Key	Description
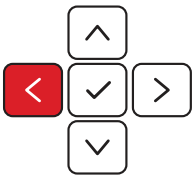	Move and hold the **Joy Key** < for five seconds to lock/unlock the OSD Menu. When the menu appears on the screen, continue holding the key for 10 seconds to lock/unlock the OSD Menu. 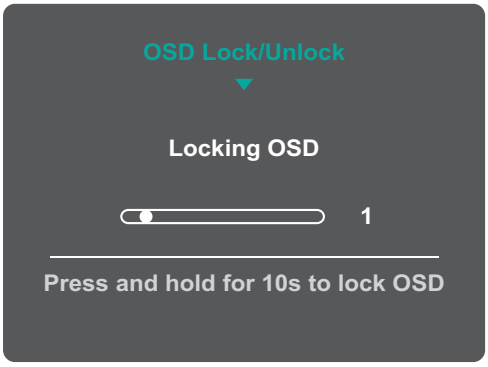 If the OSD Menu is locked, the below message will appear on the screen: 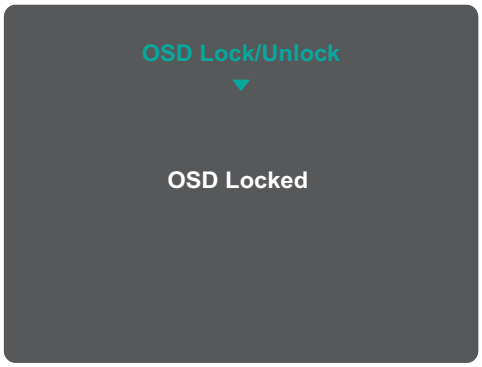

Key	Description
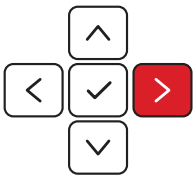	Move and hold the **Joy Key** [>] for five seconds to lock/unlock the **Power** button. When the menu appears on the screen, continue holding the key for 10 seconds to lock/unlock the **Power** button. 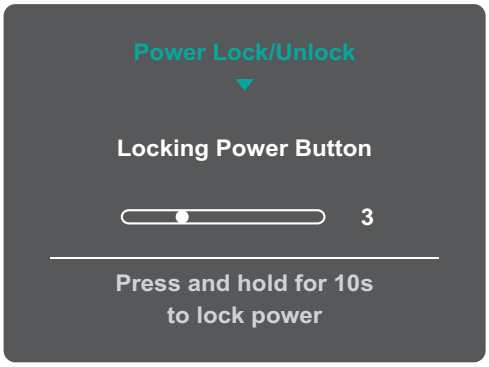 If the **Power** button is locked, the below message will appear on the screen: 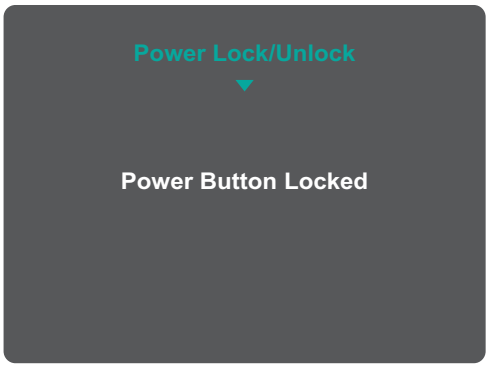
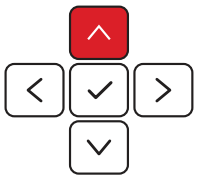	Move and hold the **Joy Key** [^] for five seconds to display/hide the boot up screen when the monitor is turned on. 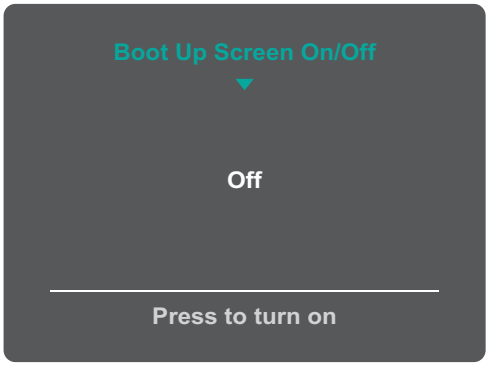

Configuring the Settings

General Operations

1. Move the **Joy Key** < / > / ^ / v to display the On-Screen Display (OSD) Menu.

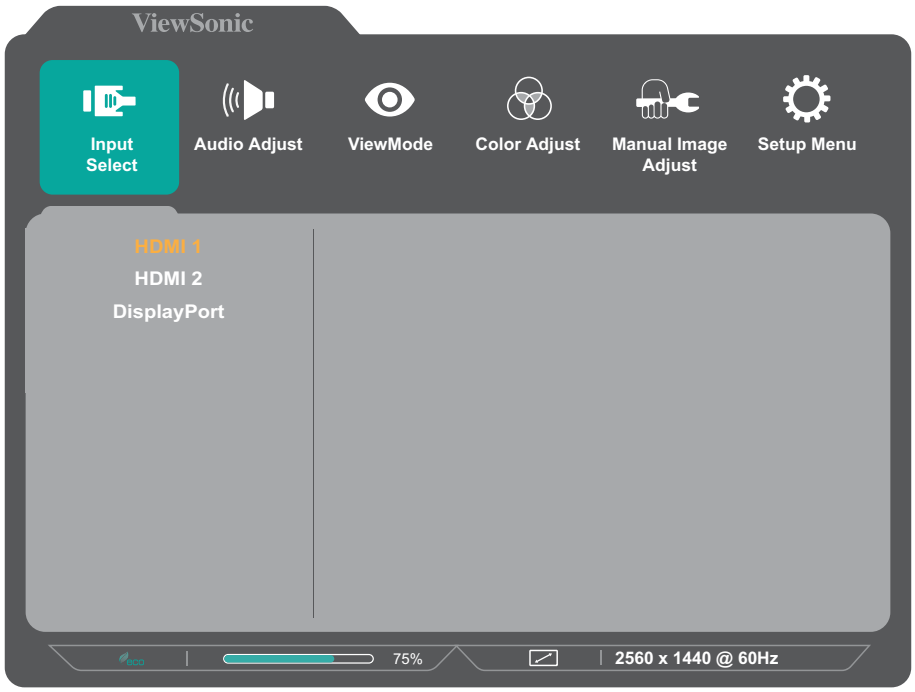

2. Move the **Joy Key** < or > to select the main menu. Then move the **Joy Key** v to enter the selected menu.

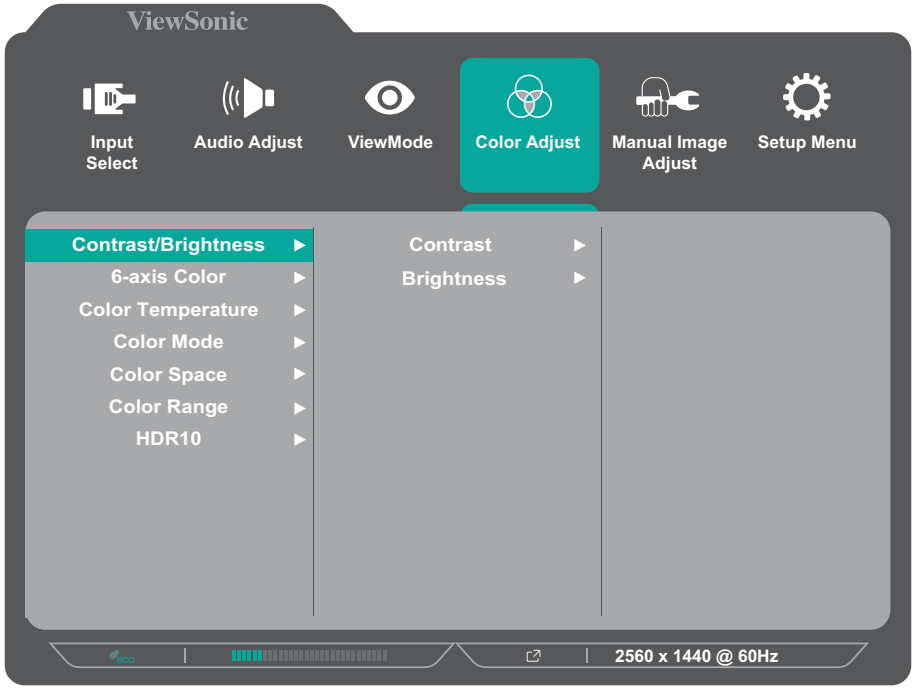

3. Move the **Joy Key** [∧] or [∨] to select the desired menu option. Then move the **Joy Key** [>] to enter the sub-menu.

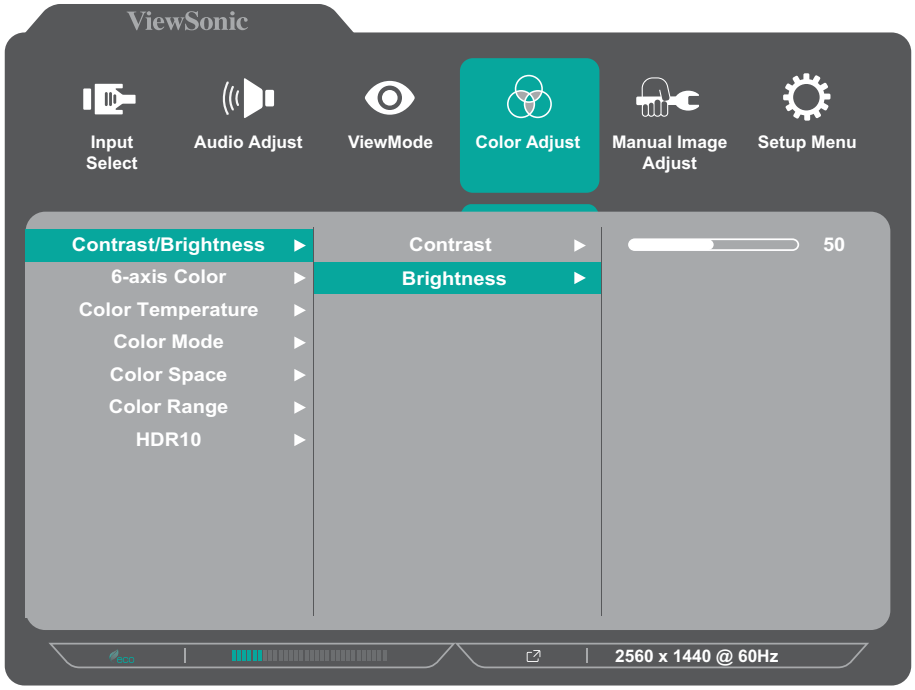

4. Move the **Joy Key** [∧] or [∨] to select the setting. Then press the **Joy Key** [✓] to confirm, or move the **Joy Key** [<] or [>] to make adjustments.

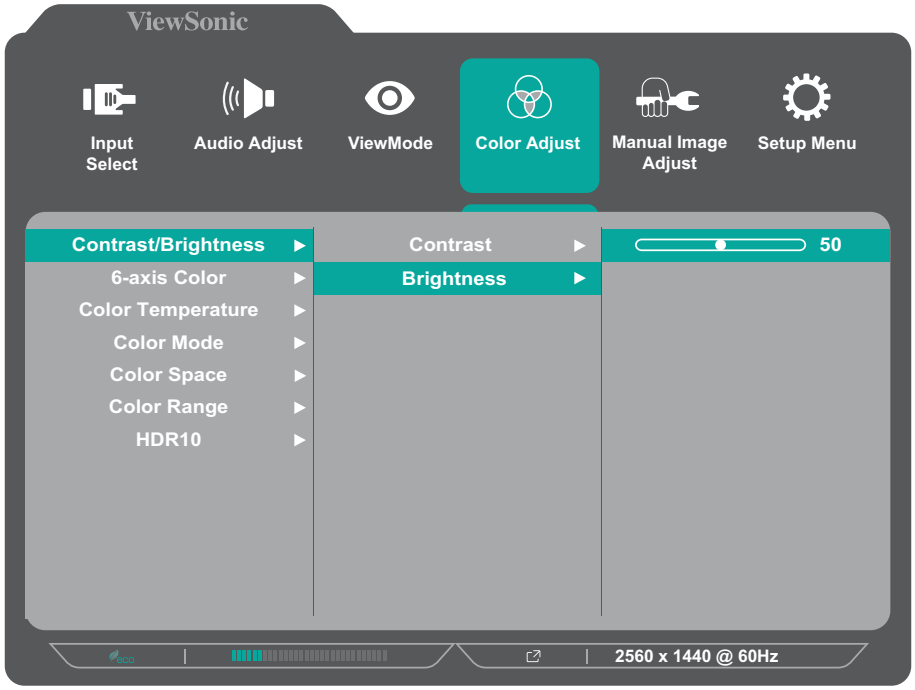

NOTE: Follow the key guide that appears on the screen to select the option or make adjustments.

On-Screen Display (OSD) Menu Tree

Main Menu	Sub-menu	Menu Option	
Input Select	HDMI 1		
	HDMI 2		
	DisplayPort		
Audio Adjust	Volume	(-/+, 0~100)	
	Mute	On	
		Off	
ViewMode	Standard		
	FPS Game		
	RTS Game		
	MOBA Game		
	Movie		
	Web		
	Text		
	MAC		
	Mono		

Main Menu	Sub-menu	Menu Option		
Color Adjust	Contrast/Brightness	Contrast	(-/+, 0~100)	
		Brightness	(-/+, 0~100)	
	6-axis Color	Hue	Red	(-/+, 0~100)
			Green	(-/+, 0~100)
			Blue	(-/+, 0~100)
			Cyan	(-/+, 0~100)
			Magenta	(-/+, 0~100)
			Yellow	(-/+, 0~100)
		Color Saturation	Red	(-/+, 0~100)
			Green	(-/+, 0~100)
			Blue	(-/+, 0~100)
			Cyan	(-/+, 0~100)
			Magenta	(-/+, 0~100)
			Yellow	(-/+, 0~100)
	Color Temperature	Bluish		
		Cool		
		Native		
		Warm		
		User Color	Red	(-/+, 0~100)
			Green	(-/+, 0~100)
			Blue	(-/+, 0~100)
	Color Mode	sRGB		
		Adobe RGB		
		DCI-P3		
		Native		
	Color Space	Auto		
		RGB		
		YUV		
	Color Range	Auto		
		Full Range		
		Limited Range		
	HDR10	Auto		
		Off		

Main Menu	Sub-menu	Menu Option	
Manual Image Adjust	Sharpness	(-/+, 0/25/50/75/100)	
	Blue Light Filter	(-/+, 0~100)	
	Aspect Ratio	4:3	
		5:4	
		16:9	
		16:10	
	Overscan	On	
		Off	
	Black Stabilization	(-/+, 0/10/20/30/40/50/60/70/80/90/100)	
	Advanced DCR	(-/+, 0/25/50/75/100)	
	Response Time	Standard	
		Advanced	
		Ultra Fast	
Setup Menu	Language Select	English	
		Français	
		Deutsch	
		Español	
		Italiano	
		Suomi	
		Svenska	
		Русский	
		Türkçe	
		Česká	
		Tiếng Việt	
		日本語	
		한국어	
		繁體中文	
		简体中文	
	AMD FreeSync	On	
		Off	
	1ms Mode	On	
		Off	
	Resolution Notice	On	
		Off	
	Information		
	OSD Timeout	(-/+, 5/15/30/60)	

Main Menu	Sub-menu	Menu Option	
Setup Menu	OSD Background	On	
		Off	
	Power Indicator	On	
		Off	
	Auto Power Off	On	
		Off	
	Sleep	30 minutes	
		45 minutes	
		60 minutes	
		120 minutes	
		Off	
	ECO Mode	Standard	
		Optimize	
		Conserve	
	DisplayPort 1.1	On	
		Off	
	Auto Detect	On	
		Off	
	DDC/CI	On	
		Off	
	Memory Recall		

Appendix

Specifications

Item	Category	Specifications
LCD	Type	IPS, Color a-Si TFT Active Matrix 2560 x 1440 LCD; 0.2331 (H)mm x 0.2331 (V)mm pixel pitch
	Display Size	68.6 cm
		27” real diagonal
	Color Filter	RGB Vertical Stripe
	Glass Surface	Anti-Glare (Haze 25%), Hard Coating (3H)
Input Signal	Video Sync	TMDS digital (100 Ω) DisplayPort (v. 1.4): f_h:30~255 kHz, f_v:48~240 Hz HDMI (v. 2.1[1]): f_h:24~222 kHz, f_v:48~144 Hz
Compatibility	PC	up to 2560 x 1440
	Macintosh	up to 2560 x 1440

1 - HDMI 2.1 (TMDS Mode) compatible.

Item	Category	Specifications
Resolution and Timings[2]	Recommended	2560 x 1440 @ 60 Hz
	Supported	• 2560 x 1440 @ 60, 100, 120, 144, 165[3], 170[2], 240[2] Hz • 2560 x 1080 @ 24, 25, 30, 50, 60 Hz • 2048 x 1152 @ 60 Hz • 1920 x 1440 @ 51, 60, 75 Hz • 1920 x 1200 @ 60, 75 Hz • 1920 x 1080 @ 24, 25, 30, 50, 60 Hz • 1680 x 1050 @ 60 Hz • 1600 x 1200 @ 60 Hz • 1600 x 900 @ 60 Hz • 1440 x 900 @ 60, 75 Hz • 1440 x 576 @ 50, 60 Hz • 1400 x 1050 @ 60, 75 Hz • 1366 x 768 @ 60 Hz • 1360 x 768 @ 60 Hz • 1280 x 1024 @ 50, 60, 75 Hz • 1280 x 960 @ 50, 60, 75 Hz • 1280 x 800 @ 60, 75 Hz • 1280 x 768 @ 50, 60, 75 Hz • 1280 x 720 @ 50, 60 Hz • 1152 x 900 @ 66 Hz • 1152 x 870 @ 75 Hz • 1152 x 864 @ 60, 75 Hz • 1024 x 768 @ 50, 60, 70, 72, 75 Hz • 1024 x 600 @ 60 Hz • 848 x 480 @ 60 Hz • 832 x 624 @ 75 Hz • 800 x 600 @ 56, 60, 72, 75 Hz • 720 x 576 @ 50 Hz • 720 x 480 @ 60 Hz • 720 x 400 @ 70 Hz • 640 x 480 @ 50, 60, 67, 73, 75 Hz • 640 x 400 @ 60, 70 Hz • 640 x 350 @ 70 Hz
Power[4]	Input Voltage	AC 100-240V, 50/60Hz (auto switch)
Display Area	Active Size (H x V)	596.736 x 335.66 mm
		23.49” x 13.21”
Operating Conditions	Altitude	5 km
		16,404.2 ft
	Relative Humidity	20% to 90% (non-condensing)
	Temperature	0° C to 40° C
		32° F to 104° F

2 - Do not set the graphics card in your computer to exceed these timing modes; doing so may result in permanent damage to the display.

3 - For DisplayPort only.

4 - Please use the power cord from ViewSonic® or an authorized source only.

Item	Category	Specifications
Storage Conditions	Altitude	12 km
		39,370.1 ft
	Relative Humidity	5% to 90% (non-condensing)
	Temperature	-20° C to 60° C
		-4° F to 140° F
Dimensions (with stand)	Physical (W x H x D)	614.1 x 453.0 x 183.0 mm
		24.1” x 17.8” x 7.17”
Dimensions (without stand)	Physical (W x H x D)	614.1 x 365.65 x 47.05 mm
		24.1” x 14.4” x 1.8”
Wall Mount	Dimensions	100 x 100 mm
Weight (with stand)	Physical	4.7 kg
		10.4 lbs
Weight (without stand)	Physical	4.45 kg
		9.81 lbs
Power Consumption	On[5]	39W (Typical)
	Off	≤ 0.3W

5 - The test condition follows EEI standards.

Glossary

This section describes the standard glossary of terms used in all LCD display models. All terms are listed in alphabetical order.

NOTE: Some terms may not be applicable to your monitor.

A

Advanced DCR
Advanced DCR technology automatically detects the image signal and intelligently controls the backlight brightness and color to improve on the ability to make the black blacker in a dark scene, and make the white whiter in a bright environment.

Audio Adjust
Adjusts the volume, mutes the sound, or toggles between inputs if you have more than one source.

Auto Detect
If the current input source has no signal, the monitor will automatically switch to the next input option. This function, on some models, is disabled by default.

Auto Image Adjust
Automatically sizes, centers, and fine tunes the video signal to eliminate waviness and distortion.

B

Blue Light Filter
Adjusts the filter that blocks high-energy blue light for a more comfortable viewing experience.

Brightness
Adjusts background black levels of the screen image.

C

Color Adjust

Provides several color adjustment modes, to help adjust the color settings to fit the user's needs.

Color Space

Allows users to choose which color space they would like to use for monitor color output (RGB, YUV).

Color Temperature

Allows users to select specific color temperature settings to further customize their viewing experience.

Panel Default	Panel Original Status
sRGB	Standard color space used for the Windows system.
Bluish	Set the color temperature to 9300K.
Cool	Set the color temperature to 7500K.
Native	Default color temperature. Recommended for general use.
Warm	Set the color temperature to 5000K.

Contrast

Adjusts the difference between the image background (black level) and the foreground (white level).

I

Information

Displays the timing mode (video signal input) coming from the graphics card in the computer, the LCD model number, the serial number, and the ViewSonic® website URL. See your graphics cards's user guide for instructions on changing the resolution and refresh rate (vertical frequency).

NOTE: VESA 1024 x 768 @ 60Hz, for example, means that the resolution is 1024 x 768 and the refresh rate is 60Hz.

Input Select

Toggles between the various input options that are available for the monitor.

M

Manual Image Adjust
Displays the “Manual Image Adjust” menu. You can manually set a variety of image quality adjustments.

Memory Recall
Returns the adjustments back to factory settings if the display is operating in a factory preset timing mode listed in the “Specifications” of this manual.

NOTE: (Exception) This control does not affect changes made in the “Language Select” or “Power Lock” setting.

O

Overscan
Refers to a cropped image on your monitor’s screen. A setting on your monitor zooms in on movie content, so that you cannot see the outermost edges of the film.

R

Recall
Resets the ViewMode monitor settings.

Resolution Notice
The notice tells users that the current viewing resolution is not the correct native resolution. This notice will appear in the display settings window when setting up the display resolution.

Response Time
Adjusts the response time, creating smooth images without streaking, blurring, or ghosting. A low response time is perfect for the most graphic-intense gaming, and provides amazing visual quality while watching sports or action movies.

S

Setup Menu
Adjusts On-Screen Display (OSD) Menu settings. Many of these settings can activate on-screen display notifications so users do not have to reopen the menu.

Sharpness
Adjusts the picture quality of the monitor.

V ViewMode

ViewSonic's unique ViewMode feature offers "Game", "Movie", "Web", "Text", "MAC", and "Mono" presets. These presets are specifically designed to deliver an optimized viewing experience for different screen applications.

1 1ms Mode <MPRT>

Choose whether to activate Moving Picture Response Time (MPRT); default setting is Off.

NOTE:

- Make sure Input Timing detection is ≥ 75Hz to turn on 1ms Mode from default.
- If 1ms Mode is set to "On", when turning on FreeSync, MPRT will automatically turn off.
- When 1ms Mode is set to "On", the following functions will be grayed out and disabled: Brightness, Advanced DCR, Eco Mode, Response Time, DDC/CI Brightness adjustment.
- The IC controls Moving Picture Response Time, so the overall Brightness will be dark.

Troubleshooting

This section describes some common problems that you may experience when using the monitor.

Problem or Issue	Possible Solutions
No power	• Make sure you have turned on the monitor by pressing the **Power** button. • Make sure the power cord is properly and securely connected to the monitor and power outlet. • Plug another electrical device into the power outlet to verify that the outlet is supplying power.
Power is On, but no image appears on screen	• Make sure the video cable connecting the monitor to the computer is properly and securely connected. • Adjust the brightness and contrast settings. • Make sure the correct input source is selected.
Wrong or abnormal colors	• If any colors (red, green, or blue) are missing, check the video cable to make sure it is properly and securely connected. Loose or broken pins in the cable connector could cause an improper connection. • Connect the monitor to another computer.
Screen image is too light or dark	• Adjust brightness and contrast settings via the OSD Menu. • Reset the monitor to factory settings.
Screen image cuts in and out	• Make sure the correct input source is selected. • Check for bent or broken pins in the video cable connector. • Make sure the video cable connecting the monitor to the computer is properly and securely connected.
Screen image is blurred	• Adjust the resolution to the correct Aspect Ratio. • Reset the monitor to factory settings.
The screen isn't centered correctly	• Adjust the horizontal and vertical controls via the OSD Menu. • Check the Aspect Ratio. • Reset the monitor to factory settings.
The screen appears yellow	• Make sure the "Blue Light Filter" is Off.

Problem or Issue	Possible Solutions
The OSD Menu does not appear on the screen/the OSD controls are inaccessible	• Check whether the OSD Menu is locked. • Turn off the monitor, unplug the power cord, plug it back in, and then turn on the monitor. • Reset the monitor to factory settings.
Control panel keys do not work	• Press only one key at a time. • Restart the computer.
Some menus aren't selectable in the OSD	• Adjust the ViewMode or the input source. • Reset the monitor to factory settings.
No audio output	• If using ear-/headphones, ensure the mini stereo jack is connected. • Make sure the volume is not muted, nor set to 0. • Check the Audio Input setting.
The monitor will not adjust	• Make sure there are no obstructions near or on the monitor, and that there is adequate spacing. • For more information, see "Adjusting the Viewing Angle".
USB devices connected to the monitor do not work	• Make sure the USB cable is connected properly. • Try changing to another USB port (if applicable). • Some USB devices require a higher electric current; connect the device directly to the computer.
The external device is connected, but no image appears on the screen	• Make sure the Power is On • Adjust brightness and contrast via the OSD Menu. • Check the connecting cable and make sure it is properly and securely connected. Loose or broken pins in the cable connector could cause an improper connection.

Maintenance

General Precautions

- Make sure the monitor is turned off and the power cable is unplugged from the power outlet.
- Never spray or pour any liquid directly onto the screen or case.
- Handle the monitor with care, as a darker-colored monitor, if scuffed, may show marks more clearly than a lighter-colored monitor.

Cleaning the Screen

- Wipe the screen with a clean, soft, lint-free cloth. This removes dust and other particles.
- If the screen is still not clean, apply a small amount of non-ammonia, non-alcohol based glass cleaner onto a clean, soft, lint-free cloth; then wipe the screen.

Cleaning the Case

- Use a soft, dry cloth.
- If the case is still not clean, apply a small amount of non-ammonia, non-alcohol based, mild non-abrasive detergent onto a clean, soft, lint-free cloth, then wipe the surface.

Disclaimer

- ViewSonic® does not recommend the use of any ammonia or alcohol-based cleaners on the display screen or case. Some chemical cleaners have been reported to damage the screen and/or case of the monitor.
- ViewSonic® will not be liable for damage resulting from use of any ammonia or alcohol-based cleaners.

Blue Light Filter and Eye Health

The Blue Light Filter blocks high-energy blue light for a more comfortable viewing experience.

While using and enjoying your monitor please keep the following in mind:

- Viewing computer screens for extended periods of time may cause eye irritation and discomfort. To reduce these effects, it is recommended to take periodic breaks from viewing to allow the eyes to relax.
- The monitor also supports Flicker-Free, which reduces or eliminates screen flicker, thus easing potential eye strain.
- Setting the filter value to 100 will provide the best performance of the blue light filter, which meets TUV certification standards.

Calculating Breaks

When viewing the monitor for extended periods, it is recommended to take periodic breaks from viewing. Short breaks of at least five (5) minutes are recommended after one (1) to two (2) hours of continuous viewing.

Taking shorter, more frequent breaks are generally more beneficial than longer, less frequent breaks.

Looking at Distant Objects

While taking breaks, users can further reduce eye strain and dryness by focusing on objects that are further away from them.

Eye and Neck Exercises

<u>Eye Exercises</u>

Eye exercises can help minimize eye strain. Slowly roll your eyes to the left, right, up, and down. Repeat as many times as needed.

<u>Neck Exercises</u>

Neck exercises can also help minimize eye strain. Relax your arms and let them hang at your sides, bend forward slightly to stretch the neck, turn your head to the right and to the left. Repeat as many times as needed.

Regulatory and Service Information

Compliance Information

This section addresses all connected requirements and statements regarding regulations. Confirmed corresponding applications shall refer to nameplate labels and relevant markings on the unit.

FCC Compliance Statement

This device complies with part 15 of FCC Rules. Operation is subject to the following two conditions: (1) this device may not cause harmful interference, and (2) this device must accept any interference received, including interference that may cause undesired operation. This equipment has been tested and found to comply with the limits for a Class B digital device, pursuant to part 15 of the FCC Rules.

These limits are designed to provide reasonable protection against harmful interference in a residential installation. This equipment generates, uses, and can radiate radio frequency energy, and if not installed and used in accordance with the instructions, may cause harmful interference to radio communications. However, there is no guarantee that interference will not occur in a particular installation. If this equipment does cause harmful interference to radio or television reception, which can be determined by turning the equipment off and on, the user is encouraged to try to correct the interference by one or more of the following measures:

- Reorient or relocate the receiving antenna.
- Increase the separation between the equipment and receiver.
- Connect the equipment into an outlet on a circuit different from that to which the receiver is connected.
- Consult the dealer or an experienced radio/TV technician for help.

Warning: You are cautioned that changes or modifications not expressly approved by the party responsible for compliance could void your authority to operate the equipment.

Industry Canada Statement

CAN ICES-003(B) / NMB-003(B)

CE Conformity for European Countries

CE The device complies with the EMC Directive 2014/30/EU and Low Voltage Directive 2014/35/EU.

The following information is only for EU-member states:

The mark shown to the right is in compliance with the Waste Electrical and Electronic Equipment Directive 2012/19/EU (WEEE). The mark indicates the requirement NOT to dispose of the equipment as unsorted municipal waste, but use the return and collection systems according to local law.

Declaration of RoHS2 Compliance

This product has been designed and manufactured in compliance with Directive 2011/65/EU of the European Parliament and the Council on restriction of the use of certain hazardous substances in electrical and electronic equipment (RoHS2 Directive) and is deemed to comply with the maximum concentration values issued by the European Technical Adaptation Committee (TAC) as shown below:

Substance	Proposed Maximum Concentration	Actual Concentration
Lead (Pb)	0.1%	< 0.1%
Mercury (Hg)	0.1%	< 0.1%
Cadmium (Cd)	0.01%	< 0.01%
Hexavalent Chromium ($Cr6^{+}$)	0.1%	< 0.1%
Polybrominated biphenyls (PBB)	0.1%	< 0.1%
Polybrominated diphenyl ethers (PBDE)	0.1%	< 0.1%
Bis (2-ethylhexyl) phthalate (DEHP)	0.1%	< 0.1%
Butyl benzyl phthalate (BBP)	0.1%	< 0.1%
Dibutyl phthalate (DBP)	0.1%	< 0.1%
Diisobutyl phthalate (DIBP)	0.1%	< 0.1%

Certain components of products as stated above are exempted under the Annex III of the RoHS2 Directives as noted below. Examples of exempted components are:

- Copper alloy containing up to 4% lead by weight.
- Lead in high melting temperature type solders (i.e. lead-based alloys containing 85% by weight or more lead).
- Electrical and electronic components containing lead in a glass or ceramic other than dielectric ceramic in capacitors, e.g. piezoelectronic devices, or in a glass or ceramic matrix compound.
- Lead in dielectric ceramic in capacitors for a rated voltage of 125V AC or 250V DC or higher.

Indian Restriction of Hazardous Substances

Restriction on Hazardous Substances statement (India). This product complies with the “India E-waste Rule 2011” and prohibits use of lead, mercury, hexavalent chromium, polybrominated biphenyls or polybrominated diphenyl ethers in concentrations exceeding 0.1 weight % and 0.01 weight % for cadmium, except for the exemptions set in Schedule 2 of the Rule.

Product Disposal at End of Product Life

ViewSonic® respects the environment and is committed to working and living green. Thank you for being part of Smarter, Greener Computing. Please visit the ViewSonic® website to learn more.

USA & Canada:

https://www.viewsonic.com/us/go-green-with-viewsonic

Europe:

https://www.viewsonic.com/eu/environmental-social-governance/recycle

Taiwan:

https://recycle.moenv.gov.tw/

For EU users, please contact us for any safety/accident issue experienced with this product:

ViewSonic Europe Limited
Haaksbergweg 75
1101 BR Amsterdam
Netherlands

+31 (0) 650608655

EPREL@viewsoniceurope.com

https://www.viewsonic.com/eu/

Copyright Information

Copyright© ViewSonic® Corporation, 2024. All rights reserved.

Macintosh and Power Macintosh are registered trademarks of Apple Inc.

Microsoft, Windows, and the Windows logo are registered trademarks of Microsoft Corporation in the United States and other countries.

ViewSonic® and the three birds logo are registered trademarks of ViewSonic® Corporation.

VESA is a registered trademark of the Video Electronics Standards Association. DPMS, DisplayPort, and DDC are trademarks of VESA.

Disclaimer: ViewSonic® Corporation shall not be liable for technical or editorial errors or omissions contained herein; nor for incidental or consequential damages resulting from furnishing this material, or the performance or use of this product.

In the interest of continuing product improvement, ViewSonic® Corporation reserves the right to change product specifications without notice. Information in this document may change without notice.

No part of this document may be copied, reproduced, or transmitted by any means, for any purpose without prior written permission from ViewSonic® Corporation.

VX2758A-2K-PRO-3_UG_ENG_1a_20240524

Customer Service

For technical support or product service, see the table below or contact your reseller.

NOTE: You will need the product's serial number, which is located on the rear of the monitor by the I/O ports.

Country/ Region	Website	Country/ Region	Website
Asia Pacific & Africa			
Australia	www.viewsonic.com/au/	Bangladesh	www.viewsonic.com/bd/
中国 (China)	www.viewsonic.com.cn	香港 (繁體中文)	www.viewsonic.com/hk/
Hong Kong (English)	www.viewsonic.com/hk-en/	India	www.viewsonic.com/in/
Indonesia	www.viewsonic.com/id/	Israel	www.viewsonic.com/il/
日本 (Japan)	www.viewsonic.com/jp/	Korea	www.viewsonic.com/kr/
Malaysia	www.viewsonic.com/my/	Middle East	www.viewsonic.com/me/
Myanmar	www.viewsonic.com/mm/	Nepal	www.viewsonic.com/np/
New Zealand	www.viewsonic.com/nz/	Pakistan	www.viewsonic.com/pk/
Philippines	www.viewsonic.com/ph/	Singapore	www.viewsonic.com/sg/
臺灣 (Taiwan)	www.viewsonic.com/tw/	ประเทศไทย	www.viewsonic.com/th/
Việt Nam	www.viewsonic.com/vn/	South Africa & Mauritius	www.viewsonic.com/za/
Americas			
United States	www.viewsonic.com/us	Canada	www.viewsonic.com/us
Latin America	www.viewsonic.com/la		
Europe			
Europe	www.viewsonic.com/eu/	France	www.viewsonic.com/fr/
Deutschland	www.viewsonic.com/de/	Қазақстан	www.viewsonic.com/kz/
Россия	www.viewsonic.com/ru/	España	www.viewsonic.com/es/
Türkiye	www.viewsonic.com/tr/	Україна	www.viewsonic.com/ua/
United Kingdom	www.viewsonic.com/uk/		

Limited Warranty

ViewSonic® Display

What the warranty covers:

ViewSonic® warrants its products to be free from defects in material and workmanship during the warranty period. If a product proves to be defective in material or workmanship during the warranty period, ViewSonic® will, at its sole option, and as your sole remedy, repair or replace the product with a similar product. Replacement Product or parts may include remanufactured or refurbished parts or components. The repair or replacement unit or parts or components will be covered by the balance of the time remaining on the customer's original limited warranty and the warranty period will not be extended. ViewSonic® provides no warranty for any third-party software whether included with the product or installed by the customer, installation of any unauthorized hardware parts or components (e.g. Projector Lamps). (Please refer to: "What the warranty excludes and does not cover" section).

How long the warranty is effective:

ViewSonic® displays are warranted for between 1 and 3 years, depending on your country of purchase, for all parts including the light source and for all labor from the date of the first consumer purchase.

Who the warranty protects:

This warranty is valid only for the first consumer purchaser.

What the warranty excludes and does not cover:

- Any product on which the serial number has been defaced, modified, or removed.
- Damage, deterioration, or malfunction resulting from:
  - » Accident, misuse, neglect, fire, water, lightning, or other acts of nature, unauthorized product modification, or failure to follow instructions supplied with the product.
  - » Repair or attempted repair by anyone not authorized by ViewSonic®.
  - » Damage to or loss of any programs, data, or removable storage media.
  - » Normal wear and tear.
  - » Removal or installation of the product.
- Software or data loss occurring during repair or replacement.
- Any damage of the product due to shipment.

- Causes external to the product, such as electric power fluctuations or failure.
- Use of supplies or parts not meeting ViewSonic's specifications.
- Failure of owner to perform periodic product maintenance as stated in the User Guide.
- Any other cause which does not relate to a product defect.
- Damage caused by static (non-moving) images displayed for lengthy periods of time (also referred to as image burn-in).
- Software - Any third-party software included with the product or installed by the customer.
- Hardware/Accessories/Parts/Components – Installation of any unauthorized hardware, accessories, consumable parts or components (e.g. Projector Lamps).
- Damage to, or abuse of, the coating on the surface of the display through inappropriate cleaning as described in the product User Guide.
- Removal, installation, and set-up service charges, including wall-mounting of the product.

How to get service:

- For information about receiving service under warranty, contact ViewSonic® Customer Support (Please refer to the "Customer Service" page). You will need to provide your product's serial number.
- To obtain warranty service, you will be required to provide: (a) the original dated sales slip, (b) your name, (c) your address, (d) a description of the problem, and (e) the serial number of the product.
- Take or ship the product, freight prepaid, in the original container to an authorized ViewSonic® service center or ViewSonic®.
- For additional information or the name of the nearest ViewSonic® service center, contact ViewSonic®.

Limitation of implied warranties:

There are no warranties, express or implied, which extend beyond the description contained herein including the implied warranty of merchantability and fitness for a particular purpose.

Exclusion of damages:

ViewSonic's liability is limited to the cost of repair or replacement of the product. ViewSonic® shall not be liable for:

- Damage to other property caused by any defects in the product, damages based upon inconvenience, loss of use of the product, loss of time, loss of profits, loss of business opportunity, loss of goodwill, interference with business relationships, or other commercial loss, even if advised of the possibility of such damages.
- Any other damages, whether incidental, consequential or otherwise.
- Any claim against the customer by any other party.
- Repair or attempted repair by anyone not authorized by ViewSonic®.

Effect of state law:

This warranty gives you specific legal rights, and you may also have other rights which vary from state to state. Some states do not allow limitations on implied warranties and/or do not allow the exclusion of incidental or consequential damages, so the above limitations and exclusions may not apply to you.

Sales outside the U.S.A. and Canada:

For warranty information and service on ViewSonic® products sold outside of the U.S.A. and Canada, contact ViewSonic® or your local ViewSonic® dealer.

The warranty period for this product in mainland China (Hong Kong, Macao, and Taiwan Excluded) is subject to the terms and conditions of the Maintenance Guarantee Card.

For users in Europe and Russia, full details of warranty provided can be found at: http://www.viewsonic.com/eu/ under "Support/Warranty Information".

Display Warranty Term Template In UG
VSC_TEMP_2007

Mexico Limited Warranty

ViewSonic® Display

What the warranty covers:

ViewSonic® warrants its products to be free from defects in material and workmanship, under normal use, during the warranty period. If a product proves to be defective in material or workmanship during the warranty period, ViewSonic® will, at its sole option, repair or replace the product with a like product. Replacement product or parts may include remanufactured or refurbished parts or components & accessories.

How long the warranty is effective:

ViewSonic® LCD displays are warranted for between 1 and 3 years, depending on your country of purchase, for all parts including the light source and for all labour from the date of the first consumer purchase.

Who the warranty protects:

This warranty is valid only for the first consumer purchaser.

What the warranty excludes and does not cover:

- Any product on which the serial number has been defaced, modified or removed.
- Damage, deterioration, or malfunction resulting from:
  - » Accident, misuse, neglect, fire, water, lightning, or other acts of nature, unauthorized product modification, unauthorized attempted repair, or failure to follow instructions supplied with the product.
  - » Causes external to the product, such as electrical power fluctuations or failure.
  - » Use of supplies or parts not meeting ViewSonic®'s specifications.
  - » Normal wear and tear.
  - » Any other cause which does not relate to a product defect.
- Any product exhibiting a condition commonly known as "image burn-in" which results when a static image is displayed on the product for an extended period of time.
- Removal, installation, insurance, and set-up service charges.

How to get service:

For information about receiving service under warranty, contact ViewSonic® Customer Support (Please refer to the attached "Customer Service" page). You will need to provide your product's serial number, so please record the product information in the space provided below on your purchase for your future use. Please retain your receipt of proof of purchase to support your warranty claim.

For Your Records

Product Name: _____ Model Number: _____

Document Number: _____ Serial Number: _____

Purchase Date: _____ Extended Warranty Purchase? _____(Y/N)

If so, what date does warranty expire? _____

- To obtain warranty service, you will be required to provide (a) the original dated sales slip, (b) your name, (c) your address, (d) a description of the problem, and (e) the serial number of the product.
- Take or ship the product, in the original container packaging, to an authorized ViewSonic® service center.
- Round trip transportation costs for in-warranty products will be paid by ViewSonic®.

Limitation of implied warranties:

There are no warranties, express or implied, which extend beyond the description contained herein including the implied warranty of merchantability and fitness for a particular purpose.

Exclusion of damages:

ViewSonic®'s liability is limited to the cost of repair or replacement of the product. ViewSonic® shall not be liable for:

- Damage to other property caused by any defects in the product, damages based upon inconvenience, loss of use of the product, loss of time, loss of profits, loss of business opportunity, loss of goodwill, interference with business relationships, or other commercial loss, even if advised of the possibility of such damages.
- Any other damages, whether incidental, consequential or otherwise.
- Any claim against the customer by any other party.
- Repair or attempted repair by anyone not authorized by ViewSonic®.

Contact Information for Sales & Authorized Service (Centro Autorizado de Servicio) within Mexico:	
Name, address, of manufacturer and importers: México, Av. de la Palma #8 Piso 2 Despacho 203, Corporativo Interpalmas, Col. San Fernando Huixquilucan, Estado de México Tel: (55) 3605-1099 http://www.viewsonic.com/la/soporte/index.htm	
NÚMERO GRATIS DE ASISTENCIA TÉCNICA PARA TODO MÉXICO: 001.866.823.2004	
Hermosillo: Distribuciones y Servicios Computacionales SA de CV. Calle Juarez 284 local 2 Col. Bugambilias C.P: 83140 Tel: 01-66-22-14-9005 E-Mail: disc2@hmo.megared.net.mx	***Villahermosa:*** Compumantenimietnos Garantizados, S.A. de C.V. AV. GREGORIO MENDEZ #1504 COL, FLORIDA C.P. 86040 Tel: 01 (993) 3 52 00 47 / 3522074 / 3 52 20 09 E-Mail: compumantenimientos@prodigy.net.mx
Puebla, Pue. (Matriz): RENTA Y DATOS, S.A. DE C.V. Domicilio: 29 SUR 721 COL. LA PAZ 72160 PUEBLA, PUE. Tel: 01(52).222.891.55.77 CON 10 LINEAS E-Mail: datos@puebla.megared.net.mx	***Veracruz, Ver.:*** CONEXION Y DESARROLLO, S.A DE C.V. Av. Americas # 419 ENTRE PINZÓN Y ALVARADO Fracc. Reforma C.P. 91919 Tel: 01-22-91-00-31-67 E-Mail: gacosta@qplus.com.mx
Chihuahua: Soluciones Globales en Computación C. Magisterio # 3321 Col. Magisterial Chihuahua, Chih. Tel: 4136954 E-Mail: Cefeo@soluglobales.com	***Cuernavaca:*** Compusupport de Cuernavaca SA de CV Francisco Leyva # 178 Col. Miguel Hidalgo C.P. 62040, Cuernavaca Morelos Tel: 01 777 3180579 / 01 777 3124014 E-Mail: aquevedo@compusupportcva.com
Distrito Federal: QPLUS, S.A. de C.V. Av. Coyoacán 931 Col. Del Valle 03100, México, D.F. Tel: 01(52)55-50-00-27-35 E-Mail : gacosta@qplus.com.mx	***Guadalajara, Jal.:*** SERVICRECE, S.A. de C.V. Av. Niños Héroes # 2281 Col. Arcos Sur, Sector Juárez 44170, Guadalajara, Jalisco Tel: 01(52)33-36-15-15-43 E-Mail: mmiranda@servicrece.com
Guerrero Acapulco: GS Computación (Grupo Sesicomp) Progreso #6-A, Colo Centro 39300 Acapulco, Guerrero Tel: 744-48-32627	***Monterrey:*** Global Product Services Mar Caribe # 1987, Esquina con Golfo Pérsico Fracc. Bernardo Reyes, CP 64280 Monterrey N.L. México Tel: 8129-5103 E-Mail: aydeem@gps1.com.mx
MERIDA: ELECTROSER Av Reforma No. 403Gx39 y 41 Mérida, Yucatán, México CP97000 Tel: (52) 999-925-1916 E-Mail: rrrb@sureste.com	***Oaxaca, Oax.:*** CENTRO DE DISTRIBUCION Y SERVICIO, S.A. de C.V. Murguía # 708 P.A., Col. Centro, 68000, Oaxaca Tel: 01(52)95-15-15-22-22 Fax: 01(52)95-15-13-67-00 E-Mail. gpotai2001@hotmail.com
Tijuana: STD Av Ferrocarril Sonora #3780 L-C Col 20 de Noviembr Tijuana, Mexico	***FOR USA SUPPORT:*** ViewSonic® Corporation 381 Brea Canyon Road, Walnut, CA. 91789 USA Tel: 800-688-6688 E-Mail: http://www.viewsonic.com

LCD Mexico Warranty Term Template In UG
VSC_TEMP_2008

ViewSonic®