User Manual
Dishwasher

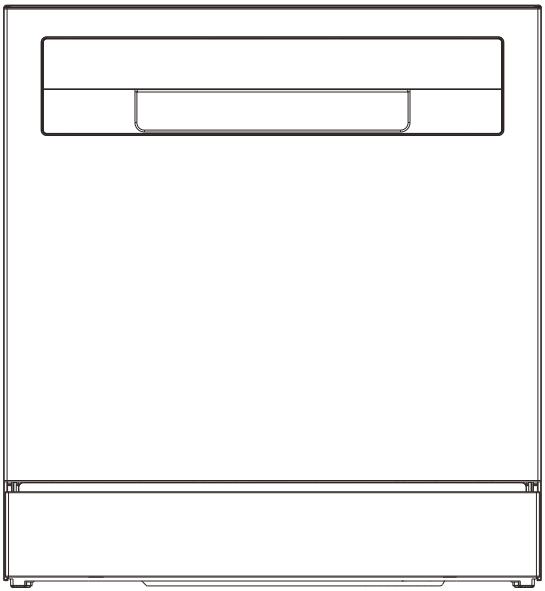

CP 8F9FFW

Thank you for purchasing a Candy product

Please read these instructions carefully before using this appliance. The instructions contain important information which will help you get the best out of the appliance and ensure safe and proper installation, use and maintenance.
Keep this manual in a convenient place so you can always refer to it for the safe and proper use of the appliance.
If you sell the appliance, give it away, or leave it behind when you move house, make sure you also pass on this manual so that the new owner can become familiar with the appliance and safety warnings.

Content

Safety and warnings 1
Installation instructions 4
Product description 12
Overview of programmes..... 13
Caring for your tableware..... 15
Loading tableware 16
How to make savings..... 18
Adding detergent..... 19
Using rinse aid..... 20
Preference Settings..... 21
Daily use..... 23
Wi-Fi Connection..... 24
Care and cleaning..... 25
Troubleshooting..... 28
Standards Test..... 32

Your dishwasher has been carefully designed to operate safely during normal dishwashing procedures. Please keep the following instructions in mind when you are using your dishwasher.

⚠ WARNING Electrical shock hazard

Before installing the dishwasher, remove the house fuse or open the circuit breaker. This appliance must be earthed. In the event of a malfunction or breakdown, earthing will reduce the risk of electric shock by providing a path of least resistance for electric current. This appliance is equipped with a cord having an equipment-earthing conductor and an earthing plug. The plug must be plugged into an appropriate outlet that is installed and earthed in accordance with all local codes and ordinances.

WARNING - Improper connection of the equipment-earthing conductor can result in a risk of electric shock. Check with a qualified electrician or service representative if you are in doubt as to whether the appliance is properly earthed.

Do not modify the power supply plug provided with the appliance - if it will not fit the outlet, have a proper outlet installed by a qualified electrician. Do not use an extension cord, adapter plug or multiple outlet box.

Failure to follow this advice may result in electrical shock or death.

⚠ WARNING Cut Hazard

Take care - panel edges are sharp.

Failure to use caution could result in injury or cuts.

⚠ WARNING When using your dishwasher, follow basic precautions, including the following:

● Read all instructions before using the dishwasher.

● The information in this manual must be followed to minimise the risk of fire or explosion or to prevent property damage, personal injury or loss of life.

● Use the dishwasher only for its intended function as described in this user guide.

● This appliance is intended to be used in household and similar applications such as:

– staff kitchen areas in shops, offices and other working environments;
– farm houses;
– by clients in hotels, motels and other residential type environments;
– bed and breakfast type environments.

● Use only detergents or rinse aid recommended for use in a domestic dishwasher and keep them out of reach of children.

● Check that the detergent dispenser is empty after the completion of each wash programme.

● When loading items to be washed, locate sharp items so that they are not likely to damage the dishwasher and load sharp knives with the handle up to reduce the risk of cut-type injuries.

● Do not touch the filter plate (the metal disc in the dishwasher base) during or immediately after use, as it may be hot from the heater plate underneath.

● Do not tamper with the controls.

● Do not abuse, sit in, stand on the door or dish rack of the dishwasher.

● Do not lean on the adjustable racks or use them to support your body weight.

● To reduce the risk of injury, do not allow children to play in or on the dishwasher.

● Under certain conditions, hydrogen gas may be produced in a hot water heater system that has not been used for two weeks or more. Hydrogen gas is explosive. If the hot water system has not been used for such a period, before using the dishwasher, turn on all hot water taps and let the water flow from each for several minutes. This will release any accumulated hydrogen gas. As the gas is flammable, do not smoke or use an open flame during this time.

● Remove the door to the washing compartment when removing an old dishwasher from service or discarding it.

● Some dishwasher detergents are strongly alkaline. They can be extremely dangerous if swallowed. Avoid contact with the skin and eyes and keep children away from the dishwasher when the door is open. Check that the detergent receptacle is empty after completion of the wash cycle.

● Certified residential dishwashers are not intended for licensed food establishments.

Maintenance safety instructions

● Disconnect the appliance from the power supply before any cleaning or maintenance.

● When disconnecting the appliance, pull the plug rather than the power supply cord or junction of cord to avoid damage.

● Do not repair or replace any part of the appliance or attempt any servicing unless specifically recommended in this user guide.

● Keep the floor around your appliance clean and dry to reduce the possibility of slipping.

● Keep the area around/underneath your appliance free from the accumulation of combustible materials, such as lint, paper, rags and chemicals.

Operational safety instructions

● Open the door very carefully if the dishwasher is in operation. There is a risk of being sprayed with hot water. Do not open the door fully until the spray arms have stopped rotating.

● The door should not be left in the open position as this could present a tripping hazard.

● The water inside the dishwasher is not suitable for drinking.

● The dishwasher must be used with the filter plate, drain filter and spray arm(s) in place. To identify what these parts are, see drawings in section "Care and Cleaning" of this user guide.

● Do not operate this dishwasher if it is damaged, malfunctioning, partially disassembled or has missing or broken parts, including a damaged power supply cord or plug.

● Household appliances are not intended to be played with by children. Children of less than 8 years old must be kept away from the appliance unless continuously supervised. This appliance can be used by children aged from 8 years and above, and persons with reduced physical, sensory or mental capabilities or lack of experience and knowledge, if they have been given supervision or instruction concerning the use of the appliance in a safe way and they understand the hazards involved.

● Cleaning and user maintenance shall not be done by children without supervision.

● Do not allow children to play inside, on or with this appliance or any discarded appliance.

● If a dishwasher cleaner is used, we would strongly recommend a wash program with detergent should be run immediately afterward, to prevent any damage to the dishwasher.

● The dishwasher is designed for washing normal household utensils. Items that are contaminated by petrol, paint, steel or iron debris, corrosive, acidic or alkaline chemicals are not to be washed in the dishwasher.

● If the dishwasher is not being used for long periods of time, turn the electricity and water supply to the dishwasher off.

Installation instructions

■ Parts supplied

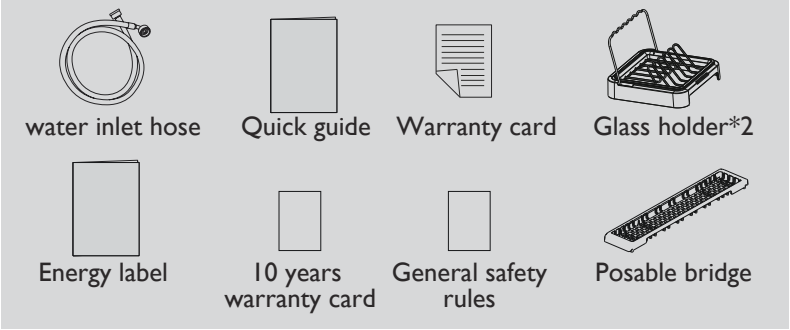

■ Prior to installation

Unpacking and handling

● Check packaging and dishwasher for signs of transport damage. If the dishwasher is in any way damaged, do not install it. Contact the dealer the dishwasher was purchased from.
● Disposal of packaging: some of the packaging is recyclable. Check the symbols and labels and recycle if possible.
● Never lift the dishwasher from the door handle or the top panel. Doing so may cause damage.
● Always be careful with the hoses and power cord at the back of the dishwasher. Careful handling will prevent damage and malfunction from squashing, kinking or cuts.
● While installing the dishwasher, check the drain hose is not restricted or kinked.

Connections and services

● Check that the power cord is long enough to reach the outlet. If it isn't, it must be replaced by a Candy authorised technician. Extension cords or multi-outlet power boards should not be used to connect the dishwasher to the power supply.
● Check that the hoses are long enough to reach the services. If a hose needs extending, ensure that the extension hose is new and of equal quality and diameter to the one already fitted.
● The dishwasher should not be connected to a water system where the temperature exceeds 60°C.
● The dishwasher must not be connected to an undersink high-pressure "push-through" type hot water system, as damage to the system will result.

Product dimensions

PLAN

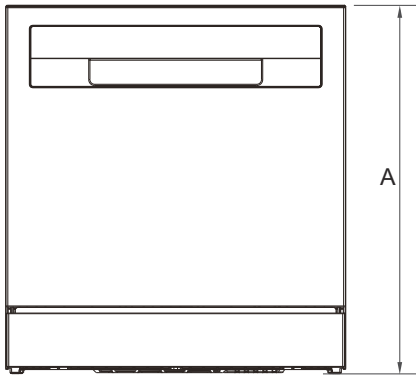

PROFILE

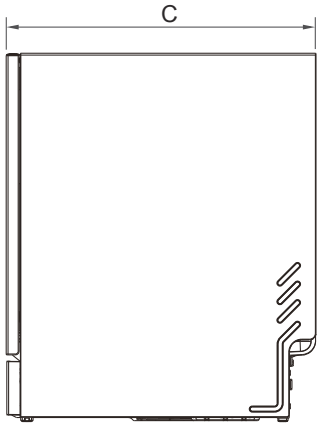

FRONT

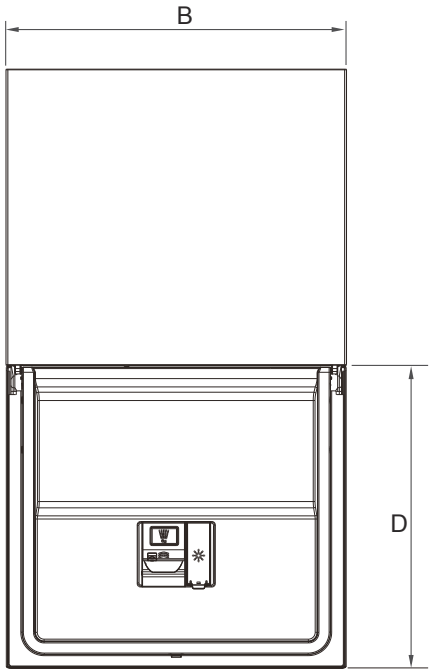

PRODUCT DIMENSIONS		MM
A	Overall height of product	595
B	Overall width of product	550
C	Overall depth of product	501
D	Depth of open door (measured from front of kickstrip)	490

Installation instructions

⚠ WARNING

The appliance is in the open door state. Do not allow children to pull the door body, otherwise the device may tip over

Installation method 1

IMPORTANT!
The power outlet must be located in a cabinet adjacent to the dishwasher cavity

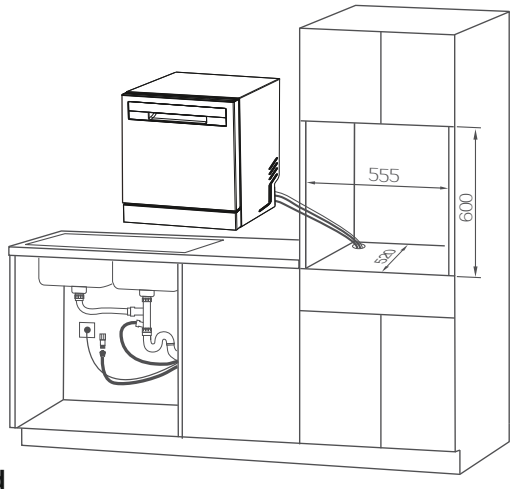

► **Drain pipe connection method**

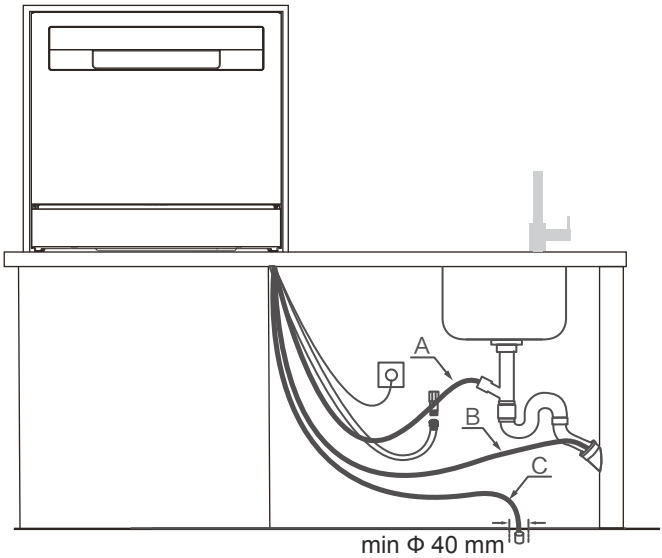

IMPORTANT!
Do not connect the drain hoses to a Waste Disposal Unit, as this type of connection may lead to a blockage in the drain hoses.

Installation method 2

To prevent possible steam damage to the cabinetry,ensure that any bare wood surrounding the dishwasher is sealed with an oil-based paint or moisture-proof polyurethane.

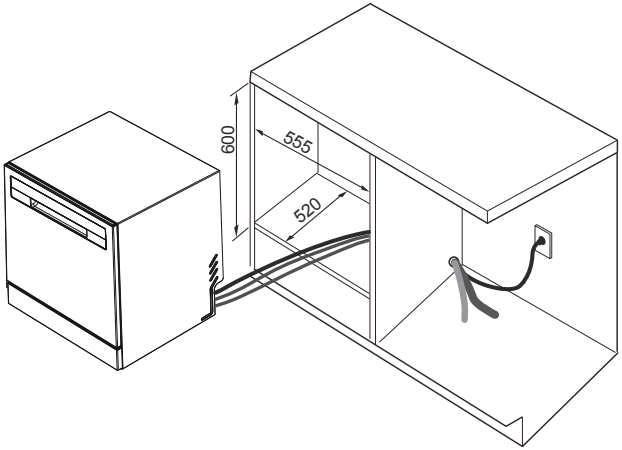

Fixed dishwasher

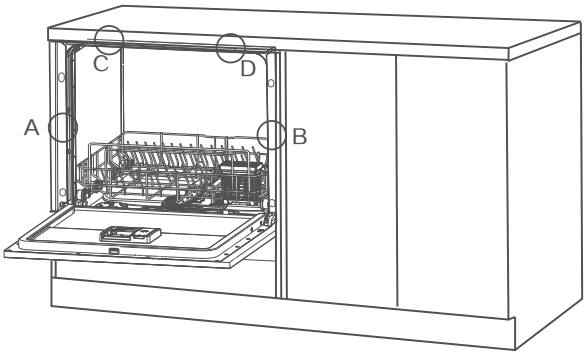

IMPORTANT!

Before fixing, it is necessary to confirm that the dishwasher is level. Maintain a consistent left and right gap between the dishwasher and the cabinet. Otherwise, it may cause abnormalities in the door body

► Drain pipe connection method

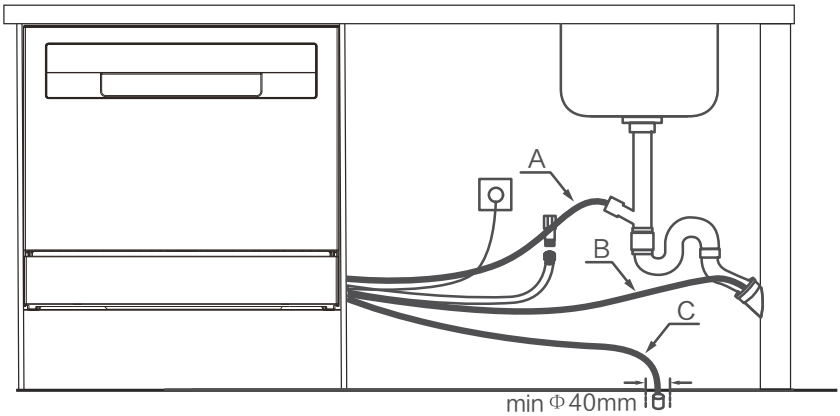

Connect inlet hose to cold water

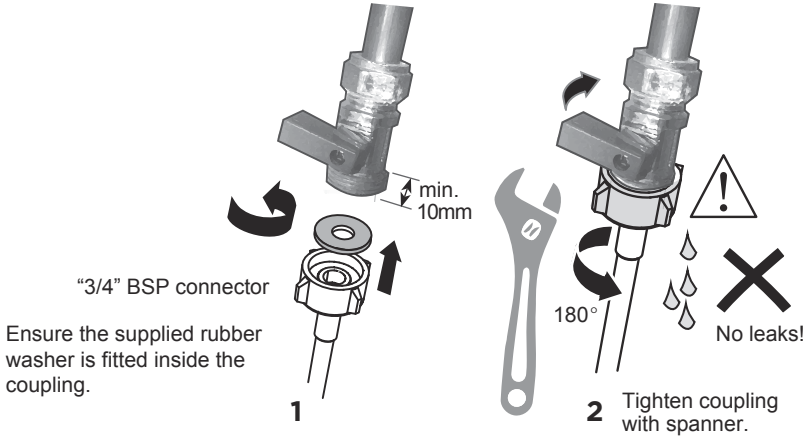

Plumbing -- Water inlet connection

IMPORTANT!

- **The appliance should be connected to the water main using the new water inlet hose supplied. Old hoses should not be used.**
- **Do not shorten the inlet hose.**

1.Take note of water connection requirements.

- The dishwasher has a single valve water connection.
- We recommend a cold water connection for best performance and energy efficiency.
- The incoming water temperature should not exceed 60°C.

2.Take note of the permitted water pressure extremes.

- Lowest: 0.4 bar = 4 N/cm^2 = 40kPa
- Where pressure is below 1 bar, contact a qualified plumber.
- Highest: 10 bar = 100 N/cm^2 = 1MPa
- Where pressure is above 10 bar, a pressure reduction valve must be installed. Contact a qualified plumber.

3.Connect the water inlet hose to an accessible water tap with a "3/4" BSP connector. Ensure that there is no kink in the inlet hose that could restrict the flow of water. A 90° bend requires a minimum height of 200 mm for a kink-free curve.

- Ensure incoming water is clear. If the water pipes have not been used for a long period of time, let the water run to make sure it is clear with no impurities. Not doing so may result in the water inlet hose getting blocked and damaging the appliance.
- If required, use a filter insert to filter out deposits from the piping. The filter insert is available from your Authorised Service Centre or Customer Care.

4.Tighten the hose coupling a further half turn after seal contact.

5.Check that the connection does not leak.

5 Plug product in

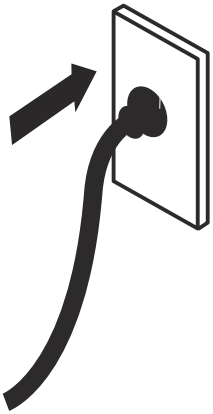

Electrical connection

- The dishwasher must not be connected to the electrical supply while installation is being carried out. Ensure all domestic wiring is properly earthed.
- Check the rating label (located on the left-hand side of the dishwasher's stainless steel inner door) and ensure that the voltage and frequency values for the current in the house correspond to those on the rating label.
- Insert the plug into a properly earthed power outlet that has a disconnection switch.

IMPORTANT!

- The earthing of the appliance is a safety requirement mandated by law.
- If the power cord is not long enough to reach the outlet or the outlet to which the appliance must be connected is not appropriate for the plug, the entire dishwasher power cord must be replaced. This should only be done by a Candy authorised technician. Do not modify or cut the plug. Do not use an adaptor, extension cord, or multi-outlet power board to connect the dishwasher to the power supply, as these could cause overheating and create a fire hazard.
- The outlet into which the dishwasher is plugged must remain easily accessible(e.g. in an adjacent cabinet) even when the appliance is installed. This is to ensure that the dishwasher can be disconnected from the power supply for safe cleaning and maintenance.

■ Final checklist

To be completed by the installer

- Check all parts are installed.
- Ensure that all panels and parts thereof are secure and final electrical tests have been conducted in accordance with local electrical regulations.
- Check that the dishwasher is level. If necessary, adjust the levelling feet slightly. To ensure optimum performance, the dishwasher should not be inclined more than 1°. Check with a spirit level.
- Ensure inlet hose to water supply has supplied rubber washer fitted, and that it's tightened a further half turn after seal contact.
- Ensure any knockouts or plugs in drain connection have been drilled out and drain connection has been made.
- The drain hose joiner must not support the weight of excess hose material. Keep drain hose as fully extended as possible to prevent sagging. Any excess length of drain hose should be kept on the dishwasher side of the highloop.
- If connecting the drain hose to the sink trap, ensure the highloop is a minimum 150mm higher than the drain hose joiner.
- Ensure any packaging or tape securing the racks is removed from the dishwasher.
- Check that the door opens and closes freely without resistance to adjacent cabinetry.
- Check that the electrical outlet is accessible and located in an adjacent cupboard.
- Check the operation of the dishwasher:
  If a fault code appears, see the 'Fault codes' section of the User guide for advice.

Product Description

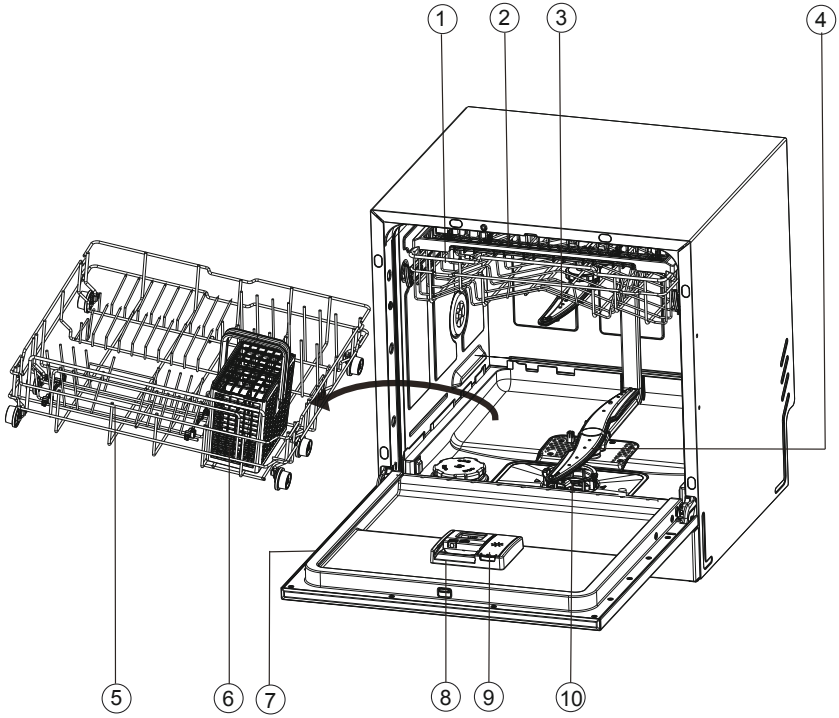

1. Upper Basket
2. Posable bridge
3. Upper Spray Arm
4. Lower Spray Arm
5. Lower Basket
6. Cutlery Basket
7. Rating Label
8. Detergent Dispenser
9. Rinse Aid Dispenser
10. Filters

Overview of programmes

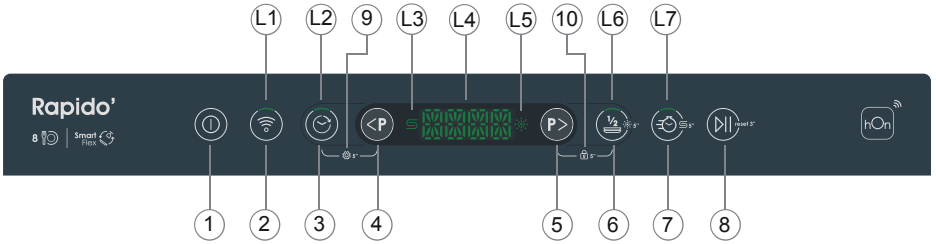

1. ON / OFF button
2. WI-FI button
3. DELAY button
4. BACK button
5. FORHT button
* 6. HALF LOAD/ RINSE SET button
* 7. EXPRESS / SALT RESET button
8. START/ PAUSE/ RESET button
* 9. SET (+)
* 10. CHILD LOCK (+)

L1. WIFI indicator
L2. DELAY indicator
L3. SALT indicator
L4. DISPLAY
L5. Rinse aid indicator
L6. HALF LOAD indicator
L7. EXPRESS indicator

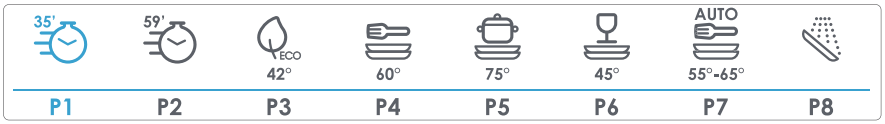

P1. RAPID 35' (W&D)
P2. RAPID 59'
P3. ECO
P4. UNIVERSAL
P5. INTENSIVE
P6. GLASS
P7. AUTO WASH (SOIL*)
P8. PREWASH

HALF LOAD: This is an option feature.Only some programe are available.

EXPRESS: This is an option feature.Only some programe are available.

SET: Press + for 5 seconds to .(only on FS and Half-Integrated)

Child Lock: To activate or cancel Child lock, press button + for 5 seconds.(only on FS and Half-Integrated)

Overview of programmes

Programmes

Programmes	Type of food residue	Type of load
RAPID 35' (W&D)	Fresh soil: Coffee,cake,milk,cold drink, salad,sausage	Non-delicate: Dinnerware cutlery, pots and pans
RAPID 59'	Fresh soil: Coffee,cake,milk,cold drink, salad,sausage	Non-delicate: Dinnerware,cutlery, glassware
ECO	Normal soil: Soups,eggs,sauce,potatoes, pasta,rice,roasted or fried food	All: Glassware,dinnerware, pots and pans
UNIVERSAL	Normal soil: Soups,eggs,sauce,potatoes, pasta,rice,roasted or fried food	Non-delicate: Dinnerware,cutlery, glassware
INTENSIVE	Heavy soil: Coffee,cake,milk,cold drink, salad,sausage	All: Glassware,dinnerware, pots and pans
GLASS	Fresh soil: Soups,eggs,sauce,potatoes, pasta,rice,roasted or fried food	Non-delicate: Dinnerware,cutlery, glassware
AUTO WASH (SOIL*)	Normal soil: Soups,eggs,sauce,potatoes, pasta,rice,roasted or fried food	Non-delicate: Dinnerware,cutlery, glassware
PREWASH	Fresh soil: Coffee,cake,milk,cold drinks, salad,sausages	Non-delicate: Dinnerwate,cutlery, glassware

After connecting to WiFi. More programs are available through the APP

IMPORTANT!

The combination of high temperatures and dishwasher detergent may cause damage to some items. Refer to the manufacturer's guidance or wash by hand if in doubt.

Cutlery and silverware

Rinse cutlery and silverware immediately after use to prevent tarnishing. Silver should not come into contact with stainless steel, mixing these can cause staining. Remove silver cutlery from the dishwasher and hand dry immediately.

Aluminium

Aluminium can be dulled by detergent. The degree of change depends on the quality of the detergent or aluminium.

Other metals

Iron and cast iron can rust and stain other items. Copper, pewter and brass tend to stain.

Woodware

Woodware is generally sensitive to heat and water. Regular use in the dishwasher may cause deterioration over time.

Glassware

Most glassware is dishwasher safe. Crystal, very fine and antique glassware may etch and develop a cloudy appearance.

Plastic

Some plastics may change shape or colour with hot water. Refer to the manufacturer’s guide. Dishwasher safe plastic should be weighed down so it does not flip and fill with water or fall through the base rack during the wash.

Decorated items

Mos t modern china patterns are dishwasher safe. Antique items, those with a pattern painted over the glaze, gold rims or hand painted china may be more sensitive to machine washing.

Glued items

Certain adhesives are softened or dissolved in machine washing.

Water hardness

Hard water is water with a high concentration of minerals such as calcium and magnesium. It can be detrimental to the performance of your dishwasher and parts can fail over time. Glassware washed in hard water will become cloudy over time and dishes will become spotted or covered in a white film. Water hardness varies by geographical location.
If you live in a hard water area, we recommend fitting a water softener to the household water supply.

If your home has hard water

Refer to 'Powdered detergent quantity recommendations'.
Use rinse aid. We recommend you raise the rinse aid setting to help improve wash performance. Refer to 'Preferences' for details.
Use a dishwasher cleaner/descaler regularly, or whenever you notice a build-up of limescale deposits in your dishwasher.

If your home has soft or softened water

Avoid using too much detergent.

Loading tableware

When loading your Dishwasher ensure items are placed so water coming from the rotating spray arm below can reach all areas. Wash performance will be reduced if it can't.

Your dishwasher can hold up to a maximum of 8 place settings.

Ensure

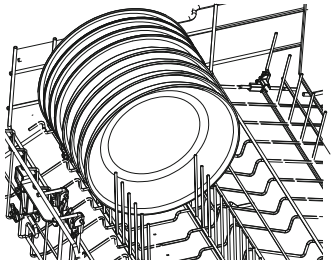

- Lower and middle spray arms can rotate freely.
- Tall items will obstruct the upper spray arm.
- Glass and other fragile items are stable.
- All dish openings are facing downwards.
- Plates are evenly spaced.
- All sharp objects are located securely to avoid injury or damage to the product.

Avoid

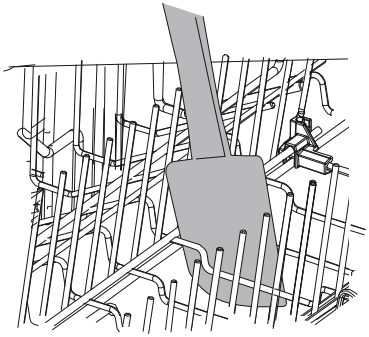

- Overcrowding.
- Any protrusions below the racks and basket that may prevent spray arm rotation.
- Any protrusions at the front of the dishwasher.
- Blocking water from any items on the foldaway cup racks.

Upper rack

The upper rack is designed to hold items like glasses, cups, saucers, plates and shallow pans.

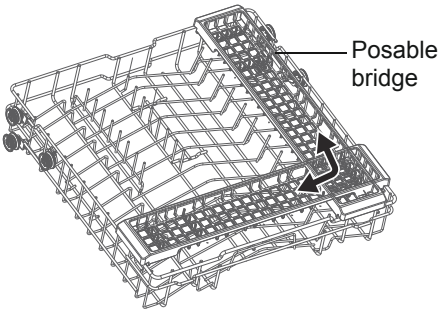

Lower rack

• Place the largest items here: pots, pans, lids, serving dishes and bowls.
• Fold down the tines to place pots and pans flat on the bottom.
• Ensure dishware items do not block the spray arm above from rotating.

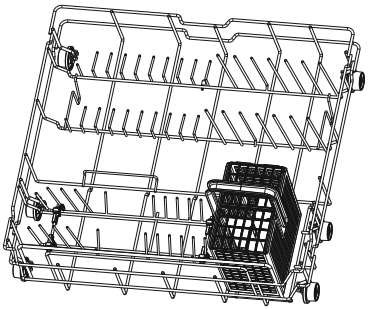

• Cutlery basket also placed on the lower shelf.

Cutlery basket

- Mix spoons with other cutlery to prevent them to bond together.
- Use the grid element in order to separate the cutlery.
- The lid of the cutlery basket can be filpped up and down.
- If long items may block the spray arms find a horizontal positioning in the upper basket.

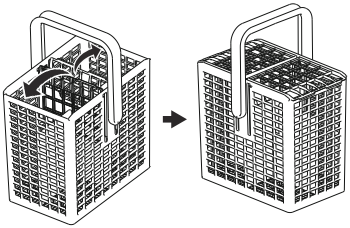

⚠ CAUTION

Put sharp and pointed items with the blade pointing downward to keep them out of harms way.

How to make savings

- Tips on how to save money and not damage the environment, when using your appliance.

- Achieve the best use of energy, water, detergent and time by using the recommended maximum load size. Save up to 50% energy by washing a full load instead of 2 half loads.

- Scrape food particles from load items rather than pre-rinse to save water.

- For normally soiled dishes select an ECO programme for most efficient water and energy consumption.

Adding detergent

IMPORTANT!

- Only use detergents recommended for automatic dishwashers.
- Dishwasher detergents are strongly alkaline. They can be extremely dangerous if swallowed. Avoid contact with the skin and eyes and keep children and infirm persons away from the dishwasher when it is open. Check that the detergent dispenser is empty after completion of each wash programme.
- Never sprinkle or pour detergent directly onto any item in the dishwasher. Detergent and dishwasher tablets should not be in direct contact with dishes or cutlery.
- Do not use hand washing liquids, soap, laundry detergents or disinfectants, as these will damage the dishwasher.

Filling the detergent dispenser

1.Press the button on the left of the dispenser.

IMPORTANT!
Approach the dispenser from the left-hand side to prevent the cover from snapping open on your hand.

2.Add detergent into the appropriate compartment(s). The ‘15’ and ‘25’ markings in the main wash compartment correspond to grams of powdered detergent.

IMPORTANT!
Tablets should only be placed in the main wash (larger) compartment.

3.Remove any excess detergent from the edges of the dispenser.
4.Close the cover and press down until it clicks shut. The detergent will automatically be released into the dishwasher during the wash programme.

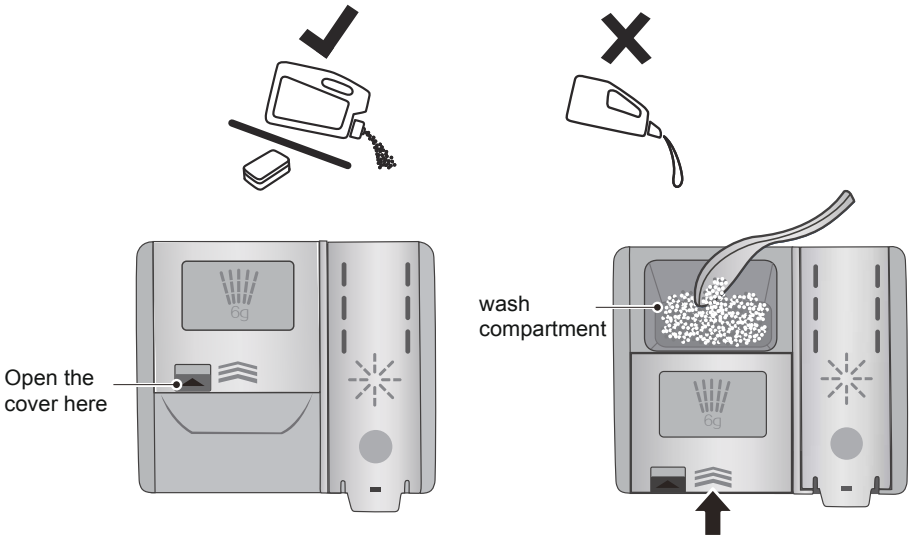

Filling the rinse aid dispenser

1.Pull the upper end of the dispenser cover to snap it open.

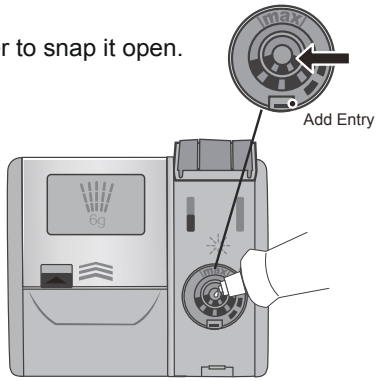

2.Pour rinse aid into the circular opening, making sure not to fill beyond the MAX marking.

IMPORTANT!

Take care not to spill rinse aid into the dishwasher. Any spills must be wiped up to prevnet excess foaming. Failure to do so may result in a service call, which will not be covered by warranty.

3.Close the cover, making sure it clicks shut.

When to refill the rinse aid

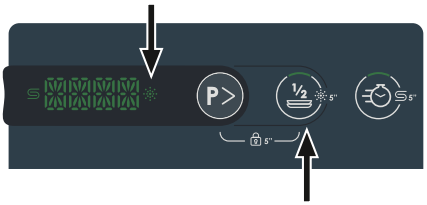

When rinse aid level becomes low, the Rinse aid indicator will light to remind you to refill the dispenser.Then press and hold ½ 5" for 5 sec after each refill to reset rinse aid indicator

We highly recommend using liquid rinse aid regularly to get the best drying results. Rinse aid gives a streak-free, sparkling clean look to glass and chinaware. In addition, it prevents metal from tarnishing

When to refill salt

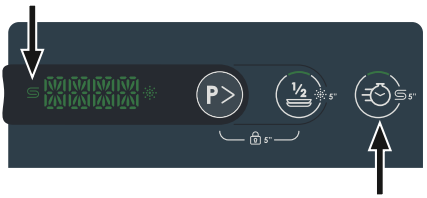

When need aid salt , the salt indicator will light to remind you. Then press and hold 5" for 5 sec after each refill to reset salt indicator

Preference Settings

How to Adjust User Preference Settings

Users can set Water softener grade,Buzzer setting, MEMO mode, Rinse Aid setting according to preferences

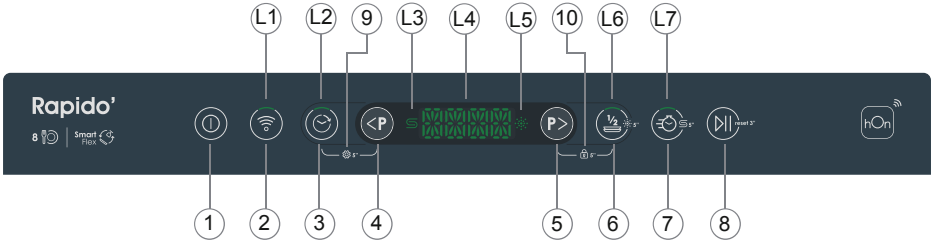

During the selection of programmes. Press and hold + for about 5 seconds to enter the menu. The screen start scrolling:LANGUAGE-SOFTENER-RINSE AID-BUZZER-LAST USED

Press and hold for about 5 seconds to cancel changes and exit.

1.Language setting

- ► Press once to selcect Language. Press to enter the language menu
- ► Press to select the language you want.
- ► Press to save the settings and enter next setting.
- ► Press to exit the settings menu and enter the program selection state.

2.Water softener gear setting

- ► Press again to selcect softener setting. Press to enter the softener menu
- ► Press to select the level you want. (S0-S5; Max:S5)
- ► Press to save the settings and enter next setting.
- ► Press to exit the settings menu and enter the program selection state.

L	°fH	°dH	
1	–	–	S0
2	0–15	0–8	S1
3	16–22	9–12	S2
4	23–29	13–16	S3
5 * DEFAULT	30–54	17–30	S4
6	55–89	31–50	S5

3.Rinse Aid setting

- ► Press P> again to selcect RINSE AID . Press ▷II to enter the RINSE menu
- ► Press <P P> to select the level you want. (R0-R3; Max:RX)
- ► Press ▷II to save the settings and enter next setting.
- ► Press ⏻ to exit the settings menu and enter the program selection state.

R0	Empty	R2	5ml default
R1	3ml	R3	6ml

4.Buzzer setting

- ► Press P> again to selcect BUZZER . Press ▷II to enter the BUZZER menu
- ► Press <P P> to select YES or NO.
- ► Press ▷II to save the settings and enter next setting.
- ► Press ⏻ to exit the settings menu and enter the program selection state.

After turning off, all sounds will be turned off. Except for the following sounds:
1. Melody when turning on/off;
2. Cycle start/reset/end;
3. Fault/error;

5.Last Program Used setting

- ► Press P> again to selcect Last Program Used . Press ▷II to enter the Last Program Used menu
- ► Press <P P> to select YES or NO.
- ► Press ▷II to save the settings and enter next setting.
- ► Press ⏻ to exit the settings menu and enter the program selection state.

Start a Programme

Press the ON/OFF button to turn the dishwasher on.

● First Start

1.1.Press <P P> to select language available. Then press to confirm the language.

1.2. Press <P P> to select the program you want on the dishwasher control panel.

● Not First Start

1.1.ECO or MEMO Mode program is showed.

1.2.Press <P P> to select the program. Continuous press available to fast scroll between programs.

(When is pressed without confirming the language, when DW turns ON again the user must select the language.) *

► Option Select

2.1. You can press ½ / and add it to the program (if available).By changing program the option deactivates.

► Delay Start selection

3.1.Press or keep pressed the to select 0:30-24:00h delay.(With 30min step till 4h, then 1h step.If the command is sent from the app, the delay start can be set in 1 minute step.)

3.2.Delay will not reset if you press <P P> to change program.

► Start the program

4.1.Press to start.

4.2.If you start a program with door open, it's paused and it will start only when you close the door

► Reset

5.1.Press and hold for 3s.

5.2.Clear all selected options and delay setting, then back to select program .

► End cycle

6.1.NO ACTION NEEDED

► Turn it OFF

7.1.Press and hold for 500ms

⚠ NOTICE

Press to pause the programme and open the door carefully.There is a risk of being sprayed with hot water, do not fully open the door until the spray arms have stopped rotating.

Your appliance can be connected to your home wireless network and Selected remotely using the app.

Getting started

Ensure your home Wi-Fi network is turned on.

You will be given step by step guidance on both your appliance and mobile device. It may take up to 10 minutes to connect your appliance
For further guidance and troubleshooting, please refer to the app.

On your mobile device:

1.Download the app from:

Download on the App Store | ANDROID APP ON Google play | EXPLORE IT ON AppGallery

2.Register and create an account.
3.Add your appliance and set up the Wi-Fi connection

Connecting to your home Wi-Fi

With the product in standby:
Press ,the display will show APP .
You can now, follow the prompts in the app to complete set-up.

Enabling Remote mode

1. When the machine is not connected with app, the icon keeps blinking.

When the machine is connected with app, the icon keeps lighting.

2. Remote control is automatically activated, the mobile app can start the dishwasher program. You can control the dishwasher by app, such as: select a cycle, cancel or pause a cycle, add the additional functions.

Care and cleaning

Over time, food residue or limescale deposits may accumulate inside your dishwasher.These may reduce efficiency, and food residue may produce a bad odour. Inspect and clean your dishwasher regularly.

IMPORTANT !

• Before any cleaning or maintenance, always disconnect the dishwasher from the power supply, turn off the water supply, and wait until all parts of the dishwasher have cooled.

• Do not use the following cleaning aids, as they may damage the surfaces:

-plastic or stainless steel scouring pads

-abrasive, solvent, household cleaners

-acid or alkaline cleaners

-laundry detergents or disinfectants

-stainless steel cleaners or polishes

-hand-washing liquids or soap

• Where there is broken crockery or glass in the dishwasher, it must be carefully removed to prevent personal injury or damage to the appliance.

• After cleaning, always check that the spray arms and filters are all correctly in place.

Cleaning the dishwasher exterior

• To clean exterior surfaces of the dishwasher, wipe with a clean, soft damp cloth and dry with a clean, lint-free cloth.

• For non-flush surfaces wipe along or around the surface. For example, to wipe down the exterior control buttons, use a circular wiping motion around the button.

• Take care not to cause excessive wetting of the control panel area.

Note: before cleaning the control panel, it is useful to disable the buttons by activating Keylock.

Cleaning the door seal and dishwasher interior

Clean thoroughly with warm water on a soft, lint-free cloth. If the interior is heavily soiled, use a dishwasher cleaner/descaler following the manufacturer’s instructions.

Cleaning the filters

The filters prevent larger food particles in the wash water from reaching the pump. These particles may occasionally block the filters. We recommend cleaning the filters whenever there is evidence of food particles.

• To remove the drain filter, turn the filter anti-clockwise to release, then lift out.
• Once the drain filter has been removed you can lift the filter plate out.
• Rinse them thoroughly under running water and then replace.
Replace the filters correctly after cleaning, making sure the filter plate is flush with the dishwasher base.

IMPORTANT !
When cleaning the underside of the filter plate, take care handling its sharp outer edge.

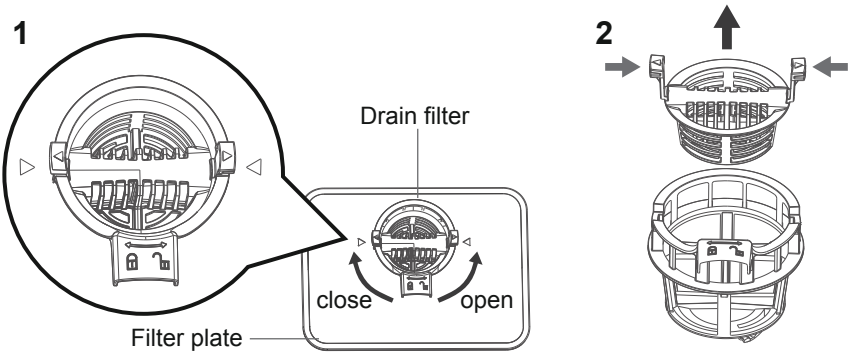

Cleaning the spray arms

Limescale and food particles in the wash water can block the holes in the spray arms and the arm mountings. Clean these parts about once a month, or more often should the need arise.

Cleaning the upper spray arm/head

- To remove the upper spray arm, carefully unscrew its locking nut.
- Rinse the spray arm thoroughly under running water, then refit.

IMPORTANT !

Make sure you twist the locking nut on the centre spray arm firmly back on the water supply tube.Check that the centre spray arm is firmly locked in place and rotates freely.

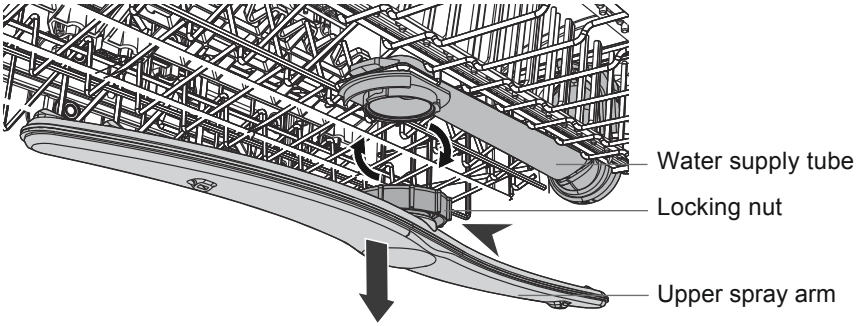

Cleaning the lower spray arm

- To remove the lower spray arm, simply lift the spray arm off its mounting.
- Rinse the spray arm thoroughly under running water, then refit it on its mounting.

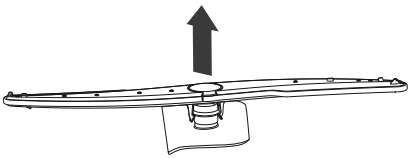

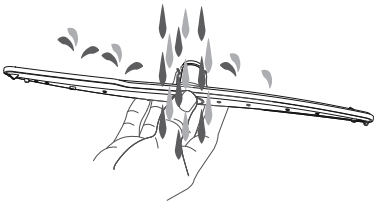

Many occuring problems could be solved by yourself without specific expertise. In case of a problem please check all shown possibilities and follow below instructions before you contact an after sales service.

⚠ CAUTION

• Before maintenance, deactivate the appliance and disconnect the mains plug from the mains socket.
• Electrical equipment should be serviced only by qualified electrical experts, because improper repairs can cause considerable consequential damages.

The appliance does not start, or it stops during operation or Indicator is lighted.

Problem	Possible cause	Possible solution
The programme does not start.	Appliance door is open.	Close the appliance door.
	Delay start is set.	Refer to displayed time.
	Mains plug is not connected in the mains socket.	Connect the mains plug.
	Fuse in the house circuit is damaged.	Replace the fuse.
Rinse Aid Indicator is lighted.	Rinse aid dispenser is empty.	Refill Rinse aid until full and reset indicator.
	Refill of rinse aid was not confirmed	Press button for 5 sec after each refill.
Salt Indicator is lighted.	Water softener salt chamber is empty	Refill salt until full and reset indicator.
	Refill of salt was not confirmed	Press button for 5 sec after each refill.

Troubleshooting

Error codes on the display

Problem	Possible cause	Possible solution
The alarm code E10 The appliance does not fill with water.	Water tap is closed.	Open the water tap. Note: Whenever Error is solved switch off the appliance and restart the programm.
	Water inlet hose has a kink or a bend.	Make sure that the position of the hose is correct.
	In case of aqua-stop system: water protection is triggered; the marker (C) is red.	The hose must be replaced.
	Filter in the water inlet hose is clogged.	Clean the filter at the inlet hose connections at tap and the rear of the appliance.
	Water inlet is clogged.	Check water flow from tap.
	Water pressure is too low.	Contact your local water authority.
The alarm code E30 Leak: The drain pump runs permanently!	Anti- flood device is on: • There are water leakages in the appliance. • The water inlet valve is open and blocked. • The drainage is blocked.	1.Close the water tap. 2.Disconnect appliance from power supply. 3.Contact Service.

All other Alarmcodes:
1. Note Alarmcode
2. Contact Service ; refer to CUSTOMER SERVICE

Washing Results are not satisfactory

Problem	Possible cause	Possible solution
The dishes are not clean.	Filters are clogged.	Clean the filters.
	Filters are not correctly assembled and installed.	Make sure that the filters are correctly assembled and installed.
	Spray arms are clogged.	Remove remaining food remnants with a thin pointed object.
	Programme was not applicable for the type of load and food remnants.	Make sure that the programme is applicable for the type of load and food remnants.
	Incorrect position of the items in the baskets. Water could not wash all items.	Make sure that the position of the items in the baskets is correct and that the water can easily wash all items.
	Spray arms could not turn freely.	Make sure that the position of the items in the baskets is correct and does not cause the blockage of the spray arms.
	No detergent or insufficient quantity of detergent in the detergent dispenser.	Make sure that you add the correct quantity detergent in the dispenser before you start a programme.
	The wash cycle was interrupted by a long break.	Do not open the door or cut power supply during the wash cycle.
Whitish streaks, stains or bluish layers on glasses and dishes.	Released quantity of rinse aid is too much.	Decrease the released quantity of rinse aid
	Quantity of detergent was too much.	Make sure that you add the correct quantity of detergent in the dispenser before you start a programme.

Troubleshooting

Problem	Possible cause	Possible solution
Dry water drop stains on glasses and dishes.	Rinse aid dosage is too low.	Increase the released quantity of rinse aid.
	Quality of rinse aid or Multitab stains on glasses	Cleaning product too old; change the product.
The dishes are wet.	• Programme had no drying phase. • Programme had a low temperature drying phase.	Open the door slightly and leave it ajar (about 100 mm) to help the drying process.
The dishes are wet and matte.	Rinse aid dispenser is empty.	Refill rinse aid into the dispenser and reset the rinse aid indicator.
	Quality of rinse aid or Multitab.	Cleaning product too old; change the product.

Wash programme	Eco
Powdered detergent quantities	16 g
Rinse aid dosage level	R2
Maximum number of place settings	8

Recommended loading patterns

0120505112