levelone

UPS-21xx Series

USER MANUAL

Android App

IOS App

Scan to Download APP

SAFETY INSTRUCTIONS

SAVE THESE INSTRUCTIONS. This manual contains important instructions that should be followed during installation and maintenance of the UPS and batteries.

UPS Tower models are considered acceptable for use in the ambient of 0 ~ 45°C;

UPS RT models are considered acceptable for use in the ambient of 0 ~ 40°C;

Certification standards

- Safety: IEC/EN 62040-1
- EMC: IEC/EN 62040-2
- Performance: IEC/EN 62040-3.
- ISO 9001:2015.
- ISO 14001:2015.

Special symbols

RISK OF ELECTRIC SHOCK- Observe the warning associated with the risk of electric shock symbol.

Important instructions that must always be followed.

EU separate collection and lead content mark for lead acid batteries. Indicates that the battery must not be disposed of to the 'normal' household waste but be separately collected and recycled.

EU separate collection mark for waste electrical and electronic equipment (WEEE). Indicates that the item must not be disposed of to the 'normal' household waste but be separately collected and recycled.

Information, advice, help.

Refer to the user manual.

Safety of persons

- Dangerous voltage levels are present within the system. It should be opened exclusively by qualified service personnel.
- The system must be properly grounded.
- The battery supplied with the system contains small amounts of toxic materials. To avoid accidents, the directives listed below must be observed:

  -Servicing of batteries should be performed or supervised by personnel knowledgeable about batteries and the required precautions.

  -Risk of explosion if battery is replaced by an incorrect type. When replacing batteries, replace with the same type and number of batteries or battery packs. Instructions shall carry sufficient information to enable the replacement of the battery with a suitable recommended type.

-CAUTION: Do not dispose of batteries in a fire. The batteries may explode. Dispose of used batteries according to the instructions.

-Do not open or mutilate batteries. Released electrolyte is harmful to the skin and eyes. It may be toxic.

-CAUTION – A battery can present a risk of electrical shock and high short circuit cur- rent. The following precautions should be observed when working on batteries:

- Remove watches, rings, or other metal objects.
- Use tools with insulated handles.
- Wear rubber gloves and boots.
- Do not lay tools or metal parts on top of batteries.
- Disconnect charging source prior to connecting or disconnecting battery terminals.
- Determine if battery is inadvertently grounded. If inadvertently grounded, remove source from ground. Contact with any part of a grounded battery can result in electrical shock. The likelihood of such shock can be reduced if such grounds are removed during installation and maintenance.
- Failed batteries can reach temperatures that exceed the burn thresholds for touchable surfaces.

Product safety

- The UPS connection instructions and operation described in the manual must be followed in the indicated order.
- UPS enclosure IP rating IP20.
- CAUTION - To reduce the risk of fire, the unit connects only to a circuit provided with branch circuit overcurrent protection for:
- 20A rating, for Tower 3ks models, trip curve C .
- The upstream circuit breaker for Normal AC/Bypass AC must be easily accessible.
- for PERMANENTLY CONNECTED EQUIPMENT, a readily accessible disconnect device shall be incorporated external to the equipment.
- for PLUGGABLE EQUIPMENT, the socket-outlet shall be installed near the equipment and shall be easily accessible.
- Check that the indications on the rating plate correspond to your AC powered system and to the actual electrical consumption of all the equipment to be connected to the system.
- Never install the system near liquids or in an excessively damp environment.
- Never let a foreign body penetrate inside the system.
- Never block the ventilation grates of the system.
- Never expose the system to direct sunlight or source of heat.
- If the system must be stored prior to installation, storage must be in a dry place.
- The admissible storage temperature range is -25°C to +55°C without batteries, 0°C to +40°C with batteries, suggest to storage the battery below 25°C.
- This UPS can be used in TN/IT/TT power system.

Special precautions

- The unit is heavy: wear safety shoes and use vacuum lifter preferentially for handling operations.
- All handling operations will require at least two people (unpacking, lifting, installation in rack system).
- Before and after the installation, if the UPS remains de-energized for a long period, the UPS must be energized for a period of 24 hours, at least once every 6 months (for a nor- mal storage temperature less than 25°C). This charges the battery, thus avoiding possible irreversible damage.
- During the replacement of the Battery Module, it is imperative to use the same type and number of elements as the original Battery Module provided with the UPS to maintain an identical level of performance and safety.

Warning:

DEUTSCH

Dieses Schnellinstallationshandbuch enthält wesentliche Informationen für die grundlegende Einrichtung. Für detaillierte Anweisungen und zusätzliche Funktionen beachten Sie bitte das umfassende Benutzerhandbuch, das auf der Website von LevelOne zum Download zur Verfügung steht: www.level1.com
Bitte lesen Sie alle Anweisungen sorgfältig durch und befolgen Sie sie während der Installation und des Betriebs des Geräts. Lesen Sie dieses Handbuch gründlich durch, bevor Sie versuchen, den UPS auszupacken, zu installieren oder zu betreiben.
VORSICHT! Der UPS muss an eine geerdete AC-Steckdose mit Sicherung oder Leitungsschutzschalter angeschlossen werden. SCHLIEßEN Sie den UPS NICHT an eine nicht geerdete Steckdose an. Wenn Sie dieses Gerät entladen müssen, schalten Sie das Gerät aus und ziehen Sie den Stecker.
VORSICHT! Die Batterie kann gefährliche Komponenten im Gerät mit Strom versorgen, selbst wenn die AC- Eingangsstromversorgung getrennt ist.
VORSICHT! Der UPS sollte in der Nähe der angeschlossenen Geräte und leicht zugänglich aufgestellt werden. VORSICHT! Um das Risiko eines Brandes oder elektrischen Schlags zu verhindern, installieren Sie den UPS in einem temperatur- und feuchtigkeitskontrollierten Innenbereich, der frei von leitfähigen Verunreinigungen ist. (Bitte beachten Sie die Spezifikationen für akzeptable Temperatur- und Feuchtigkeitsbereiche).
VORSICHT! (Keine benutzerbedienbaren Teile): Risiko eines elektrischen Schlags, nehmen Sie die Abdeckung nicht ab. Im Inneren befinden sich keine vom Benutzer wartbaren Teile. Wenden Sie sich zur Wartung an qualifiziertes Servicepersonal.
VORSICHT! (Nicht isolierte Batterieversorgung): Risiko eines elektrischen Schlags, der Batteriekreis ist nicht vom AC-Stromnetz isoliert; Gefährliche Spannung kann zwischen den Batterieklemmen und dem Boden vorhanden sein.
Vor Berührung testen.
VORSICHT! Um das Risiko eines Brandes zu reduzieren, schließen Sie den UPS an einen Stromkreis mit maximal 10 Ampere (1K / 2K) / 16 Ampere (3K)
Ü berstromschutz gemäß den CE-Anforderungen an.
VORSICHT! Die AC-Steckdose, an die der UPS angeschlossen ist, sollte in der Nähe des Geräts und leicht zugänglich sein.
VORSICHT! Verwenden Sie bitte nur VDE-geprüfte und mit CE gekennzeichnete Netzkabel (z. B. das Netzkabel Ihres Geräts), um den UPS an die AC-Steckdose anzuschließen.
VORSICHT! Verwenden Sie bitte nur VDE-geprüfte und mit CE gekennzeichnete

Stromkabel, um Geräte mit dem UPS zu verbinden.

VORSICHT! Bei der Installation des Geräts stellen Sie sicher, dass die Summe des Ableitstroms des UPS und der angeschlossenen Geräte 3,5 mA nicht überschreitet.

VORSICHT! Trennen Sie das Gerät während des Betriebs nicht vom AC-Stromnetz, da dies die Schutzleiterisolierung ungültig macht.

VORSICHT! Um einen elektrischen Schlag zu vermeiden, schalten Sie das Gerät aus und ziehen Sie den Stecker, bevor Sie das Eingangs-/Ausgangsnetzkabel mit

Erdung installieren. Schließen Sie die Erdung vor dem Anschließen der Leiterdrähte an!

VORSICHT! Verwenden Sie kein Stromkabel in unangemessener Größe, da dies zu Beschädigungen Ihres Geräts und Brandgefahren führen kann.

VORSICHT! Die Verdrahtung muss von qualifiziertem Personal durchgeführt werden.

VORSICHT! NICHT FÜ R MEDIZINISCHE ODER LEBENSUNTERSTÜ TZENDE GERÄ TE VERWENDEN! Unter keinen Umständen darf dieses Gerät für medizinische Anwendungen mit lebenserhaltender Ausrüstung und/oder Patientenversorgung verwendet werden.

VORSICHT! NICHT IN DER NÄ HE VON AQUARIEN VERWENDEN! Zur Minimierung des Brandrisikos nicht in der Nähe von Aquarien verwenden. Kondenswasser aus dem Aquarium kann mit metallischen elektrischen Kontakten in Berührung kommen und das Gerät kurzschließen.

VORSICHT! Entsorgen Sie Batterien nicht im Feuer, da die Batterie explodieren kann.

VORSICHT! Ö ffnen oder beschädigen Sie die Batterie nicht, da ausgetretenes Elektrolyt schädlich für Haut und Augen ist.

VORSICHT! Eine Batterie kann ein Risiko für einen elektrischen Schlag und einen hohen Kurzschlussstrom darstellen. Die folgende Vorsichtsmaßnahme sollte beachtet werden, wenn an Batterien gearbeitet wird:

1. Uhren, Ringe oder andere Metallgegenstände entfernen.
2. Verwenden Sie Werkzeuge mit isolierten Griffen.

VORSICHT! Das Gerät hat eine gefährliche Spannung. Wenn die UPS-Anzeigen aktiv sind, kann das Gerät weiterhin Strom liefern, sodass die Steckdosen des Geräts möglicherweise eine gefährliche Spannung aufweisen, auch wenn es nicht an die Wandsteckdose angeschlossen ist.

VORSICHT! Stellen Sie sicher, dass alles vollständig ausgeschaltet und vollständig getrennt ist, bevor Wartungsarbeiten, Reparaturen oder Sendungen durchgeführt werden.

VORSICHT! Schließen Sie vor dem Anschließen anderer Kabel den Schutzleiter (PE) sicherheitsmäßig an.

WARNUNG! (Sicherungen): Um das Brandrisiko zu verringern, ersetzen Sie nur durch denselben Typ und dieselbe Bewertung der Sicherung.

INSTALLIEREN SIE DEN UPS NICHT AN EINEM ORT, DER DIREKTER SONNENEINSTRAHLUNG AUSGESETZT IST ODER SICH IN DER NÄ HE EINER STARKEN WÄ RMEQUELLE BEFINDET!

BLOCKIEREN SIE NICHT DIE BELÜ FTUNGSÖ FFNUNGEN UM DAS GEHÄ USE HERUM! VERBINDEN SIE HAUSHALTSGERÄ TE WIE HAARTROCKNER NICHT MIT DEN UPS- AUSGANGSSTECKDOSEN!
DIE WARTUNG VON BATTERIEN SOLLTE VON PERSONAL DURCHGEFÜ HRT ODER Ü BERWACHT WERDEN, DAS Ü BER WISSEN IM UMGANG MIT BATTERIEN UND DIE ERFORDERLICHEN VORSICHTSMASSNAHMEN
VERFÜ GT. HALTEN SIE UNBEFUGTE PERSONEN VON DEN BATTERIEN FERN!

FRANCAIS

Ce Guide d'Installation Rapide fournit des informations essentielles pour la configuration de base. Pour des instructions détaillées et des fonctionnalités supplémentaires, veuillez consulter le manuel utilisateur complet disponible en téléchargement sur le site web de LevelOne : www.level1.com.
Veuillez lire et suivre attentivement toutes les instructions lors de l'installation et de l'utilisation de l'appareil. Lisez ce manuel attentivement avant d'essayer de déballer, d'installer ou d'utiliser l'UPS.
ATTENTION ! L'UPS doit être connecté à une prise secteur AC mise à la terre avec protection fusible ou disjoncteur. NE branchez PAS l'UPS sur une prise qui n'est pas mise à la terre. Si vous devez vider l'équipement de sa puissance, éteignez-le et débranchez l'appareil.
ATTENTION ! La batterie peut alimenter des composants dangereux à l'intérieur de l'unité, même lorsque l'alimentation CA est déconnectée.
ATTENTION ! L'UPS doit être placé près de l'équipement connecté et facilement accessible.
ATTENTION ! Pour éviter le risque d'incendie ou de choc électrique, installez-le dans un espace intérieur contrôlé en termes de température et d'humidité, sans contaminants conducteurs. (Veuillez consulter les spécifications pour la plage de température et d'humidité acceptables).
ATTENTION ! (Aucune pièce réparable par l'utilisateur) : Risque de choc électrique, ne retirez pas le couvercle. Aucune pièce réparable par l'utilisateur à l'intérieur. Confiez la maintenance à un personnel qualifié. **ATTENTION ! (Alimentation de batterie non isolée) :** Risque de choc électrique, le circuit de batterie n'est pas isolé de la source d'alimentation CA ; une tension dangereuse peut exister entre les bornes de la batterie et la terre. Testez avant de toucher.
ATTENTION ! Pour réduire le risque d'incendie, connectez l'UPS à un circuit de dérivation avec une protection contre les surintensités maximales de 10 ampères (1K / 2K) / 16 ampères (3K) conformément aux exigences CE.
ATTENTION ! La prise secteur à laquelle l'UPS est connecté doit être proche de l'unité et facilement accessible. ATTENTION ! Veuillez utiliser uniquement un câble secteur testé VDE, marqué CE, (par exemple le câble secteur de votre équipement), pour connecter l'UPS à la prise secteur.
ATTENTION ! Veuillez utiliser uniquement des câbles d'alimentation testés VDE, marqués CE, pour connecter tout équipement à l'UPS.

ATTENTION ! Lors de l'installation de l'équipement, assurez-vous que la somme du courant de fuite de l'UPS et de l'équipement connecté ne dépasse pas 3,5 mA.
ATTENTION ! Ne débranchez pas l'unité de l'alimentation CA pendant l'utilisation, car cela invalidera l'isolation de la mise à la terre de protection.
ATTENTION ! Pour éviter les chocs électriques, éteignez et débranchez l'unité avant d'installer le cordon d'alimentation d'entrée/sortie avec fil de terre. Connectez d'abord le fil de terre avant de connecter les fils de ligne ! ATTENTION ! N'utilisez pas de cordon d'alimentation de taille incorrecte car cela peut endommager votre équipement et provoquer des risques d'incendie. ATTENTION ! Le câblage doit être effectué par un personnel qualifié.

ATTENTION ! NE PAS UTILISER POUR DU MATÉRIEL MÉDICAL OU DE SUPPORT VITAL ! En aucun cas,
cette unité ne doit être utilisée pour des applications médicales impliquant du matériel de support vital et/ou des soins aux patients.

ATTENTION ! NE PAS UTILISER AVEC OU PRÈS D'AQUARIUMS ! Pour réduire le risque d'incendie, ne pas utiliser avec ou près d'aquariums. La condensation de l'aquarium peut entrer en contact avec les contacts électriques métalliques et provoquer un court-circuit de la machine.

ATTENTION ! Ne jetez pas les batteries au feu car la batterie peut exploser.
ATTENTION ! Ne pas ouvrir ou mutiler la batterie, l'électrolyte libéré est nocif pour la peau et les yeux.
ATTENTION ! Une batterie peut présenter un risque de choc électrique et de courant de court-circuit élevé. Les précautions suivantes doivent être observées lors du travail sur les batteries

1. Retirez les montres, bagues ou autres objets métalliques.
2. Utilisez des outils avec des poignées isolées.

ATTENTION ! L'unité a une quantité dangereuse de tension. Lorsque les indicateurs de l'UPS sont allumés, les unités peuvent continuer à fournir de l'énergie, donc les prises de l'unité peuvent avoir une quantité dangereuse de tension même lorsqu'elle n'est pas branchée à la prise murale.
ATTENTION ! Assurez-vous que tout est éteint et complètement déconnecté avant d'effectuer toute maintenance, réparation ou expédition.
ATTENTION ! Connectez le conducteur de sécurité Terre de Protection (PE) avant tout autre câble. AVERTISSEMENT ! (Fusibles) : Pour réduire le risque d'incendie, remplacez uniquement par le même type et la même puissance de fusible.

NE PAS INSTALLER L'UPS DANS UN ENDROIT EXPOSÉ DIRECTEMENT AU SOLEIL OU PRÈS D'UNE SOURCE DE CHALEUR INTENSE !
NE PAS OBSTRUER LES OUVERTURES DE VENTILATION AUTOUR DU BOÎTIER !
NE PAS CONNECTER DES APPAREILS DOMESTIQUES COMME DES SÈCHE-CHEVEUX AUX PRISES DE SORTIE DE L'UPS !
LA MAINTENANCE DES BATTERIES DOIT ÊTRE EFFECTUÉE OU SURVEILLÉE PAR DU PERSONNEL CONNAISSANT LES BATTERIES ET LES PRÉCAUTIONS REQUISES. TENIR LES PERSONNES NON AUTORISÉES ÉLOIGNÉES DES BATTERIES !

ESPANOL

Esta Guía de Instalación Rápida proporciona información esencial para la configuración básica. Para instrucciones detalladas y características adicionales, consulte el manual de usuario completo disponible para descargar en el sitio web de LevelOne: www.Level1.com.

Por favor, lea y siga todas las instrucciones cuidadosamente durante la instalación y operación de la unidad. Lea este manual detenidamente antes de intentar desempaquetar, instalar u operar el UPS.

¡ PRECAUCIÓ N! El UPS debe estar conectado a un tomacorriente de CA con conexión a tierra con protección de fusible o interruptor automático. NO enchufe el UPS en un tomacorriente que no esté conectado a tierra. Si necesita drenar la energía de este equipo, apáguelo y desenchúfelo.

¡ PRECAUCIÓN! La batería puede alimentar componentes peligrosos dentro de la unidad, incluso cuando la alimentación de CA está desconectada.

¡ PRECAUCIÓ N! El UPS debe colocarse cerca del equipo conectado y ser fácilmente accesible.

¡ PRECAUCIÓN! Para evitar el riesgo de incendio o descarga eléctrica, instálelo en un área interior controlada en temperatura y humedad, libre de contaminantes conductores. (Consulte las especificaciones para el rango de temperatura y humedad aceptable).

¡ PRECAUCIÓN! (No hay piezas reparables por el usuario): Riesgo de descarga eléctrica, no quite la cubierta. No hay piezas reparables por el usuario adentro. Consulte a personal de servicio calificado para el mantenimiento.

¡ PRECAUCIÓ N! (Suministro de baterí ano aislado): Riesgo de descarga eléctrica, el circuito de la batería no está aislado de la fuente de alimentación de CA; puede existir voltaje peligroso entre los terminales de la batería y tierra. Pruebe antes de tocar.

¡ PRECAUCIÓN! Para reducir el riesgo de incendio, conecte el UPS a un circuito de derivación con protección máxima de sobre corriente de 10 amperios (1K / 2K) / 16 amperios (3K) de acuerdo con los requisitos de CE.

¡ PRECAUCIÓN! El tomacorriente de CA donde está conectado el UPS debe estar cerca de la unidad y ser fácilmente accesible.

¡ PRECAUCIÓN! Utilice solo cables de alimentación marcados con VDE probados y CE para conectar el UPS al tomacorriente de CA. (por ejemplo, el cable de alimentación de su equipo).

¡ PRECAUCIÓN! Utilice solo cables de alimentación probados con VDE y marcados CE para conectar cualquier equipo al UPS.

¡ PRECAUCIÓN! Al instalar el equipo, asegúrese de que la suma de la corriente de fuga del UPS y el equipo conectado no exceda los 3.5mA.

¡ PRECAUCIÓN! No desconecte la unidad de la alimentación de CA durante la operación, ya que esto invalidará la aislación de tierra protectora.

¡ PRECAUCIÓ N! Para evitar descargas eléctricas, apague y desenchufe la unidad antes de instalar el cable de alimentación de entrada/salida con un cable de tierra. ¡Conecte el cable de tierra antes de conectar los cables de línea!

¡ PRECAUCIÓN! No use un cable de alimentación de tamaño inadecuado, ya que puede causar daños a su equipo y provocar riesgos de incendio.

¡ PRECAUCIÓN! El cableado debe ser realizado por personal calificado.

¡ PRECAUCIÓN! La unidad tiene una cantidad peligrosa de voltaje. Cuando los indicadores del UPS están encendidos, las unidades pueden continuar suministrando energía, por lo tanto, los enchufes de la unidad pueden tener una cantidad peligrosa de voltaje incluso cuando no están conectados a la toma de corriente de la pared.

¡ PRECAUCIÓN! Asegúrese de que todo esté apagado y desconectado completamente antes de realizar cualquier mantenimiento, reparación o envío.

¡ PRECAUCIÓN! Conecte el conductor de seguridad Tierra de Protección (PE) antes de conectar cualquier otro cable.

¡ ADVERTENCIA! (Fusibles): Para reducir el riesgo de incendio, reemplace solo con el mismo tipo y calificación de fusible.

¡ NO INSTALE EL UPS DONDE ESTÉ EXPUESTO A LA LUZ SOLAR DIRECTA O CERCA DE UNA FUENTE DE CALOR INTENSA!

¡ NO BLOQUEE LAS ABERTURAS DE VENTILACIÓ N ALREDEDOR DE LA CARCASA!
¡ NO CONECTE APARATOS DOMÉ STICOS COMO SECADORES DE PELO A LOS TOMACORRIENTES DE SALIDA DEL UPS!
EL MANTENIMIENTO DE LAS BATERÍ ASDEBE SER REALIZADO O SUPERVISADO POR PERSONAL CON CONOCIMIENTO DE BATERÍ ASY LAS PRECAUCIONES REQUERIDAS. ¡ MANTENGA A LAS PERSONAS NO AUTORIZADAS LEJOS DE LAS BATERÍ AS!

ITALIANO

Questa Guida alla Rapida Installazione fornisce informazioni essenziali per la configurazione di base. Per istruzioni dettagliate e funzionalità aggiuntive, consultare il manuale utente completo disponibile per il download sul sito web di
: www.level1.com
Si prega di leggere e seguire attentamente tutte le istruzioni durante l'installazione e il funzionamento dell'unità. Leggere attentamente questo manuale prima di tentare di sballare, installare o far funzionare l'UPS. **ATTENZIONE!** L'UPS deve essere collegato a una presa di corrente AC con messa a terra e protezione tramite fusibile o interruttore differenziale. NON collegare l'UPS a una presa non messa a terra. Se è necessario scaricare completamente l'attrezzatura, spegnere e scollegare l'unità.
ATTENZIONE! La batteria può alimentare componenti pericolosi all'interno dell'unità, anche quando l'alimentazione AC è scollegata.
ATTENZIONE! L'UPS deve essere posizionato vicino all'attrezzatura collegata e facilmente accessibile. **ATTENZIONE!** Per evitare il rischio di incendio o shock elettrico, installare in un'area interna controllata in termini di temperatura e umidità, priva di contaminanti conduttivi. (Si prega di consultare le specifiche per il range accettabile di temperatura e umidità).
ATTENZIONE! (Nessuna parte riparabile dall'utente): Rischio di shock elettrico, non rimuovere il coperchio. Nessuna parte riparabile dall'utente all'interno. Rivolgersi a personale qualificato per la manutenzione.
ATTENZIONE! (Alimentazione batteria non isolata): Rischio di shock elettrico, il circuito della batteria non è isolato dalla fonte di alimentazione AC; potrebbe esistere una tensione pericolosa tra i terminali della batteria e la terra. Testare prima di toccare.
ATTENZIONE! Per ridurre il rischio di incendio, collegare l'UPS a un circuito derivato con protezione massima da sovracorrente di 10 ampere (1K / 2K) / 16 ampere (3K) in conformità ai requisiti CE.
ATTENZIONE! La presa AC a cui è collegato l'UPS dovrebbe essere vicina all'unità e facilmente accessibile. **ATTENZIONE!** Si prega di utilizzare solo cavi di rete testati VDE, marcati CE, (ad esempio il cavo di rete del vostro equipaggiamento), per collegare l'UPS alla presa AC.
ATTENZIONE! Si prega di utilizzare solo cavi di alimentazione testati VDE, marcati CE, per collegare qualsiasi equipaggiamento all'UPS.
ATTENZIONE! Durante l'installazione dell'attrezzatura, assicurarsi che la somma della corrente di dispersione dell'UPS e dell'attrezzatura collegata non superi i 3,5 mA.
ATTENZIONE! Non scollegare l'unità dall'alimentazione AC durante il funzionamento, poiché ciò invaliderà l'isolamento della messa a terra protettiva. **ATTENZIONE!** Per evitare shock elettrici, spegnere e scollegare l'unità prima di installare il cavo di alimentazione ingresso/uscita con filo di terra. Collegare il filo di terra prima di collegare i fili di linea!
ATTENZIONE! Non utilizzare un cavo di alimentazione di dimensioni inappropriate poiché potrebbe danneggiare l'attrezzatura e causare rischi di incendio.

ATTENZIONE! L'unità ha una quantità pericolosa di tensione. Quando l'indicatore dell'UPS è acceso, le unità possono continuare a fornire energia e quindi le prese dell'unità possono avere una quantità pericolosa di tensione anche quando non è collegata alla presa a muro.

ATTENZIONE! Assicurarsi che tutto sia spento e completamente scollegato prima di effettuare qualsiasi manutenzione, riparazione o spedizione.
ATTENZIONE! Collegare il conduttore di sicurezza Terra di Protezione (PE) prima di connettere qualsiasi altro cavo. **ATTENZIONE! (Fusibili):** Per ridurre il rischio di incendio, sostituire solo con lo stesso tipo e valore nominale di fusibile.
NON INSTALLARE L'UPS IN LUOGHI ESPOSTI A LUCE SOLARE DIRETTA O VICINO A FONTI DI CALORE INTENSO!
NON OSTACOLARE LE APERTURE DI VENTILAZIONE ATTORNO ALL'INVOLUCRO!
NON COLLEGARE APPARECCHI DOMESTICI COME ASCIUGACAPELLI ALLE PRESE DI USCITA DELL'UPS! LA MANUTENZIONE DELLE BATTERIE DEVE ESSERE EFFETTUATA O SOVRAVISIONATA DA PERSONALE CHE CONOSCE LE BATTERIE E LE PRECAUZIONI RICHIESTE. MANTENERE PERSONALE NON AUTORIZZATO LONTANO DALLE BATTERIE!

PORTUGUÊ S

Este Guia de Instalação Rápida fornece informações essenciais para a configuração básica. Para instruções detalhadas e recursos adicionais, consulte o manual do usuário completo disponível para download no site da LevelOne:www.level1.com.
Por favor, leia e siga todas as instruções cuidadosamente durante a instalação e operação da unidade. Leia este manual completamente antes de tentar desembalar, instalar ou operar o UPS.
CUIDADO! O UPS deve ser conectado a uma tomada de corrente alternada com aterramento, com proteção de fusível ou disjuntor. NÃ O conecte o UPS a uma tomada que não esteja aterrada. Se precisar desativar este equipamento, desligue e desconecte a unidade.
CUIDADO! A bateria pode alimentar componentes perigosos dentro da unidade, mesmo quando a energia de entrada CA estiver desconectada.
CUIDADO! O UPS deve ser colocado próximo ao equipamento conectado e de fácil acesso.
CUIDADO! Para evitar o risco de incêndio ou choque elétrico, instale em uma área interna controlada por temperatura e umidade, livre de contaminantes condutivos.
(Consulte as especificações para faixa de temperatura e umidade aceitável). **CUIDADO! (Nenhuma Peça Serviçável pelo Usuário):** Risco de choque elétrico, não remova a tampa. Não há peças servíveis pelousuário dentro. Encaminhe a manutenção para pessoal qualificado.
CUIDADO! (Fonte de Alimentação de Bateria Não Isolada): Risco de choque elétrico, o circuito da bateria não está isolado da fonte de energia CA; pode existir voltagem perigosa entre os terminais da bateria e o terra. Teste antes de tocar. **CUIDADO!** Para reduzir o risco de incêndio, conecte o UPS a um circuito derivado com proteção máxima de sobrecorrente de 10 amperes (1K / 2K) / 16 amperes (3K) de acordo com os requisitos da CE.
CUIDADO! A tomada de CA onde o UPS está conectado deve estar próxima à unidade e de fácil acesso. **CUIDADO!** Use apenas cabos de alimentação testados pela VDE e marcados com CE para conectar o UPS à tomada de CA (por exemplo, o cabo de alimentação do seu equipamento).
CUIDADO! Use apenas cabos de energia testados pela VDE e marcados com CE para conectar qualquer equipamento ao UPS.
CUIDADO! Ao instalar o equipamento, certifique-se de que a soma da corrente de fuga do UPS e do equipamento conectado não exceda 3,5mA.
CUIDADO! Não desconecte a unidade da Energia CA durante a operação, pois isso invalidará o isolamento de terra de proteção.
CUIDADO! Para evitar choque elétrico, desligue e desconecte a unidade antes de instalar o cabo de energia de entrada/saída com fio terra. Conecte o fio terra antes de conectar os fios de linha!
CUIDADO! Não use um cabo de energia de tamanho inadequado, pois isso pode causar

danos ao seu equipamento e riscos de incêndio.
CUIDADO! A fiação deve ser realizada por pessoal qualificado.

CUIDADO! A unidade possui uma quantidade perigosa de voltagem. Quando os indicadores do UPS estão ligados, as unidades podem continuar a fornecer energia, assim as tomadas da unidade podem ter uma quantidade perigosa de voltagem mesmo quando não estão conectadas à tomada da parede.
CUIDADO! Certifique-se de que tudo esteja desligado e desconectado completamente antes de realizar qualquer manutenção, reparo ou envio. **CUIDADO!** Conecte o condutor de segurança Terra de Proteção (PE) antes de conectar quaisquer outros cabos.
AVISO! (Fusí veis): Para reduzir o risco de incêndio, substitua apenas pelo mesmo tipo e classificação de fusível. **NÃ O INSTALE O UPS ONDE ELE FICARIA EXPOSTO À LUZ SOLAR DIRETA OU PRÓ XIMO A UMA FONTE DE CALOR FORTE!**
NÃ O BLOQUEIE AS ABERTURAS DE VENTILAÇ Ã O AO REDOR DA CARCAÇ A! NÃ O CONECTE ELETRODOMÉ STICOS COMO SECADORES DE CABELO À S TOMADAS DE SAÍ DADO UPS!
A MANUTENÇ Ã O DAS BATERIAS DEVE SER REALIZADA OU SUPERVISIONADA POR PESSOAL CÔNHECEDOR DE BATERIAS E DAS PRECAUÇ Õ ES NECESSÁ RIAS. MANTENHA PESSOAL NÃ O AUTORIZADO LONGE DAS BATERIAS!

Magyar

Ez a Gyors Telepítési Útmutató lényeges információkat nyújt az alapvető beállításhoz. Részletes utasításokért és további funkciókért kérjük, tekintse meg a teljes körű felhasználói kézikönyvet, amely letölthető a LevelOne weboldaláról: www.level1.com.
Kérjük, gondosan olvassa el és kövesse az összes utasítást a berendezés telepítése és üzemeltetése során. Olvassa el alaposan ezt a kézikönyvet, mielőtt megpróbálná kicsomagolni, telepíteni vagy üzemeltetni az UPS-t. **FIGYELEM!** Az UPS-t földelt AC hálózati aljzathoz kell csatlakoztatni, biztosítékkal vagy áramkör-védelemmel. NE csatlakoztassa az UPS-t földelés nélküli aljzatba. Ha le szeretné meríteni az eszközt, kapcsolja ki és húzza ki az egységet a hálózati aljzatból.
FIGYELEM! Az akkumulátor áramot szolgáltathat a készülékben található veszélyes alkatrészekhez, még akkor is, ha a hálózati áramellátás ki van kapcsolva. **FIGYELEM!** Az UPS-t a csatlakoztatott berendezések közelében és könnyen hozzáférhető helyre kell elhelyezni.
FIGYELEM! A tűz- vagy áramütési veszély elkerülése érdekében telepítse egy hőmérséklet- és páratartalom- szabályozott beltéri területre, szabad vezetőanyag-szennyeződésektől mentesen. (Kérjük, tekintse meg a megengedett hőmérsékleti és páratartalom-tartományra vonatkozó specifikációkat.)
FIGYELEM! (Nincsenek felhasználó által javí tható alkatrészek): Á ramütés veszélye, ne távolítsa el a fedélzetet. A készülék belsejében nincsenek felhasználó által javítható alkatrészek. A szervizelést engedélyezett személyzet végezze. **FIGYELEM! (Nem elszigetelt akkumulátoros tápegység):** Á ramütés veszélye, az akkumulátor áramköre nincs szigetelve az AC tápellátástól; veszélyes feszültség lehet az akkumulátor termináljai és a föld között. Érintés előtt tesztelje.
FIGYELEM! A tűzveszély csökkentése érdekében csatlakoztassa az UPS-t egy 10 amperes (1K / 2K) / 16 amperes (3K) maximális túlfeszültség-védelemmel rendelkező ágkörbe a CE előírásoknak megfelelően.
FIGYELEM! Az AC aljzat, amelyhez az UPS csatlakozik, közel kell legyen a berendezéshez és könnyen hozzáférhetőnek kell lennie.
FIGYELEM! Kérjük, használjon csak VDE-tesztelt, CE-jelzett hálózati kábelt (például az Ö n berendezése hálózati kábelét), hogy az UPS-t az AC aljzathoz csatlakoztassa. **FIGYELEM!** Kérjük, használjon csak VDE-tesztelt, CE-jelzett tápkábeleket bármely berendezés csatlakoztatásához az UPS-hez.
FIGYELEM! Az eszköz telepítésekor győződjön meg róla, hogy az UPS és a csatlakoztatott berendezések átszivárgási áramának összege nem haladja meg a 3,5mA-t.

FIGYELEM! Ne húzza ki az egységet az AC hálózati áramforrásból üzem közben, mert ez érvénytelenné teszi a védőföldszigetelést.
FIGYELEM! Az elektromos sokk elkerülése érdekében kapcsolja ki és húzza ki az egységet, mielőtt a bemeneti/ kimeneti hálózati kábelt a földelési vezetékkel telepíti. Csatlakoztassa a földelési vezetéket a vonalvezetékek csatlakoztatása előtt! **FIGYELEM!** Ne használjon nem megfelelő méretű hálózati kábelt, mert ez károsíthatja az Ön berendezését, és tűzveszélyt okozhat.
FIGYELEM! A vezetékezést csak képzett személyzet végezze.

FIGYELEM! NE HASZNÁLJA ORVOSI VAGY ÉLETMENTŐ FELSZERELÉSHEZ! Semmilyen körülmények
között ne használja ezt az egységet orvosi alkalmazásokra életmentő berendezésekkel és/vagy betegápolással kapcsolatban.
FIGYELEM! NE HASZNÁ LJA AKVÁ RIUMOKKAL VAGY KÖ ZEL! A tűzveszély csökkentése érdekében ne használja akváriumokkal vagy azok közelében. Az akvárium kondenzációja érintkezhet a fémes elektromos kapcsolatokkal és rövidzárlatot okozhat a gépben.
FIGYELEM! Ne dobja a akkumulátorokat tűzbe, mert az akkumulátor felrobbanhat.
FIGYELEM! Ne nyissa ki vagy
roncsolja meg az akkumulátort, mert a kiszabaduló elektrolit káros lehet a bőrre és a szemre.
FIGYELEM! Az akkumulátor elektromos sokk- és magas rövidzárlati áramveszélyt jelenthet. Az alábbi elővigyázatossági intézkedéseket kell betartani az akkumulátorokkal való munka során: Vegye le az órákat, gyűrűket vagy más
fémtárgyakat. Használjon szigetelt
fogantyúval ellátott eszközöket.
FIGYELEM! Az egység veszélyes mennyiségű feszültséggel rendelkezik. Amikor az UPS jelzője be van kapcsolva, az egység továbbra is áramot szállíthat, így az egység aljzatai veszélyes mennyiségű feszültséget tarthatnak fenn, még akkor is, ha nincs csatlakoztatva a fali aljzathoz.
FIGYELEM! Győződjön meg arról, hogy minden teljesen kikapcsolt és leválasztott, mielőtt bármilyen karbantartást, javítást vagy szállítást végezne.
FIGYELEM! Csatlakoztassa az Védelem Föld (PE) biztonsági vezetőt, mielőtt más kábeleket csatlakoztatna. **FIGYELEM! (Biztosí tékok):** A tűzveszély csökkentése érdekében csak ugyanolyan típusú és besorolású biztosítékkal cserélje ki.
NE TELEPÍ TSE AZ UPS-T OLYAN HELYRE, AHOL KÖZVETLEN NAPFÉNYSUGÁRZÁSNAK LENNE KITESZVE, VAGY KÖZEL EGY ERŐS HŐFORRÁSHOZ!
NE ZÁRJA EL A KARBANTARTÁS ALATT
ÁLLÓ SZELLŐZTETÉSI NYÍ LÁSOKAT A
BURKOLAT KÖ RÜ L!
NE CSATLAKOZZON OTTHONI KISZOLGÁ LÓ
BERENDEZÉ SEKET, MINT PÉ LDÁ UL HAJSZÁ RÍ TÓ
KAT, AZ UPS KIMENETI CSATLAKOZÓ IBA!
AZ AKKUMULÁ TOROK SZERVIZELÉ SÉ T OLYAN SZEMÉ LYZETNEK KELL ELVÉ GEZNI VAGY FELÜ GYELNI, AKIK ISMERIK AZ AKKUMULÁ TOROKAT É S A SZÜKSÉGES ELŐÍRT ÓVINTÉZKEDÉSEKET. TARTSON TÁVOLSÁGOT A NEM JÓVÁHAGYOTT SZEMÉLYZETTŐL AZ AKKUMULÁTOROKTÓL!

Contents

1 Introduction **1**
1.1 Electronic equipment Protection 1
1.2 Environmental protection 2
2 Product Overview **3**
2.1 Weight and Dimension 4
2.2 Rear panels 5
3 Installation **6**
3.1 Inspecting the equipment 6
3.2 Checking the accessory kit 6
3.3 Install the Unit 7
3.4 Connecting the EBM(s) 11
4 Operation **12**
4.1 LCD panel 12
4.2 LCD description 13
4.3 Display functions 15
4.4 User settings 15
4.5 Starting the UPS with utility 16
4.6 Starting the UPS on Battery 17
4.7 UPS Shutdown 17
5 Communication 18
5.1 RS232 and USB 18
5.2 UPS remote control functions 18
5.3 IoT 19
5.4 Modbus TCP 21
5.5 Intelligent Card (Optional) 21
5.6 UPS Management Software 22
6 UPS maintenance **24**
6.1 Equipment care 24
6.2 Transporting the UPS 24
6.3 Storing the equipment 24
6.4 4
6.5 Recycle 26
7 Troubleshooting **27**
8 Specifications **29**

1 Introduction

Thank you for selecting our UPS to protect your electrical equipment.

We recommend that you take the time to read this manual to take full advantage of the many features of the UPS (Uninterruptible Power System).

Before installing the UPS, please read the booklet presenting the safety instructions. Then follow the indications in this manual.

1.1 Electronic equipment protection

The UPS protects your sensitive electronic equipment from the most common power problems, including power failures, power sags, power surges, brownouts, line noise, high voltage spikes, frequency variations, switching transients, and harmonic distortion.

Special characteristic:

- Double converter with pure sine waveform output
- Full digital control
- Higher power density, and output PF = 1
- Wider input voltage range: 110Vac~300Vac
- Higher efficiency: 93% for 2K/3k, 89% for 1k/1.5k
- Input THDI<5%
- Bigger charger current for long backup mode:8A, adjustable from 2A to 8A through LCD
- EBM quantity auto detection
- Communication ports: RPO, Dry in, Dry out, intelligent slot, USB, RS232
- IoT: Ethernet(default) and Wireless (Optional)
- Dot-matrix LCD, it supports Multi-Language
- ECO Mode
- Start-able without battery.

1.2 Environmental protection

Products are developed according to an eco-design approach.

Substances

This product does not contain CFCs, HCFCs or asbestos.

Packing

To improve waste treatment and facilitate recycling, separate the various packing components.

- The cardboard we use comprises over 50% of recycled cardboard.
- Sacks and bags are made of polyethylene.
- Packing materials are recyclable.

Follow all local regulations for the disposal of packing materials.

Product

The product is mainly made up of recyclable materials.

Dismantling and disassembly must take place in compliance with all local regulations concerning waste. At the end of its service life, the product must be transported to recycling centers, re-use and treatment facilities for waste electrical and electronic equipment (WEEE).

Battery

The product contains lead-acid batteries that must be processed according to applicable local regulations concerning batteries.

The battery may be removed to comply with regulations and in view of correct disposal.

2 Product Overview

2.1 Weight and Dimension

The weights in this table is reference only, please see the labels on the carton for details.

Rack Mount models

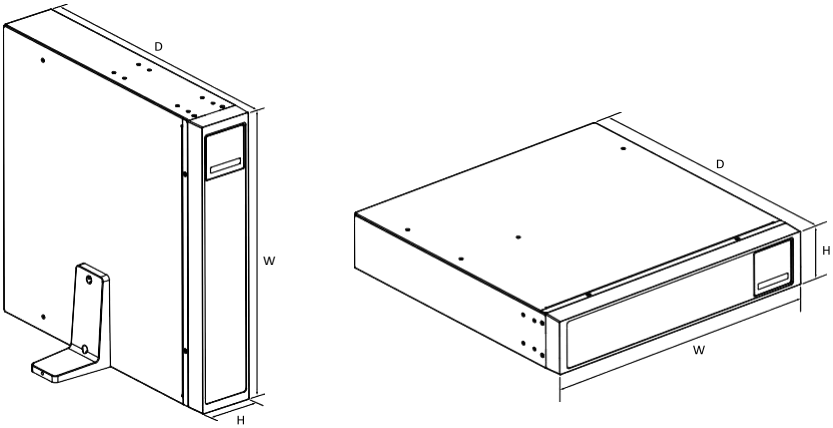

Description	Net Weights (kg)	Dimensions: D x W x H (mm)	Remark
UPS-2101	14.3	445*438*85.5	Standard model
UPS-2102	23.3	600*438*85.5	
UPS-2103	26.2	600*438*85.5	
EBM-2136	22.6	445*438*85.5	EBM model
EBM-2172	39.9	600*438*85.5	

2.2 Rear panels

UPS-2101

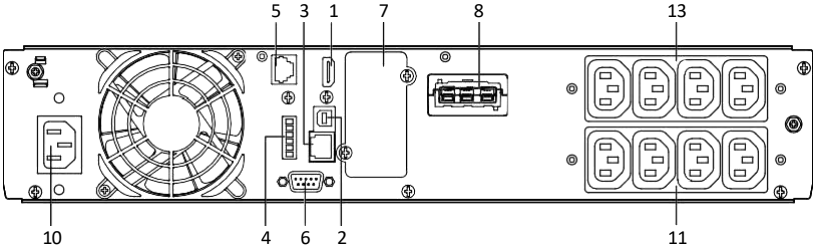

UPS-2102

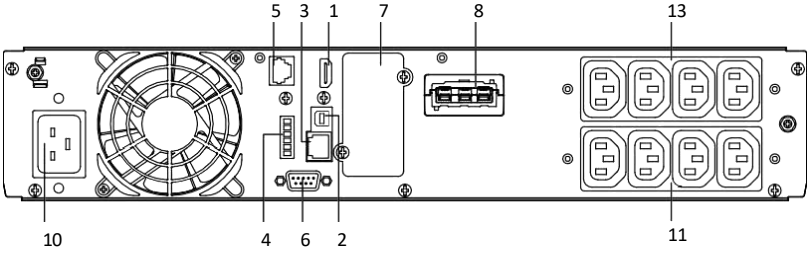

UPS-2103

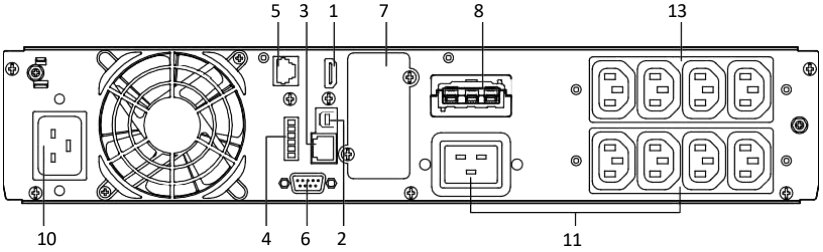

EBM-2136

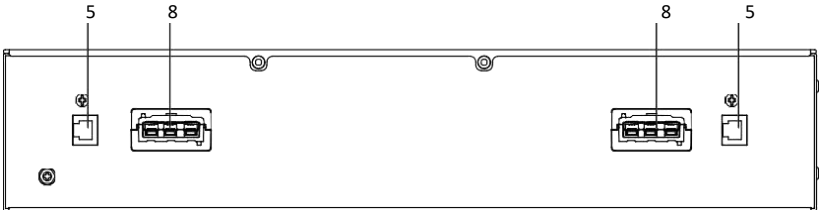

EBM-2172

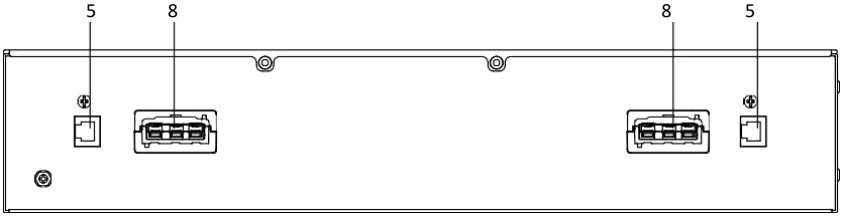

1	WLAN(HDMI)	8	EBM Connector
2	USB	9	Input Breaker(optional)
3	Ethernet (RJ45)	10	Input Socket/ Input Terminal
4	RPO/Dry in/Dry out	11	Output Socket/Output Terminal
5	EBM auto detection	12	Output Fuse (optional)
6	RS232	13	Programmable Output Socket
7	Slot Card Box		

3 Installation

3.1 Inspecting the equipment

If any equipment has been damaged during shipment, keep the shipping cartons and packing materials for the carrier or place of purchase and file a claim for shipping damage. If you discover damage after acceptance, file a claim for concealed damage.

To file a claim for shipping damage or concealed damage:

1. File with the carrier within 15 days of receipt of the equipment;
2. Send a copy of the damage claim within 15 days to your service representative.

3.2 Checking the accessory kit

UPS-21xx Series

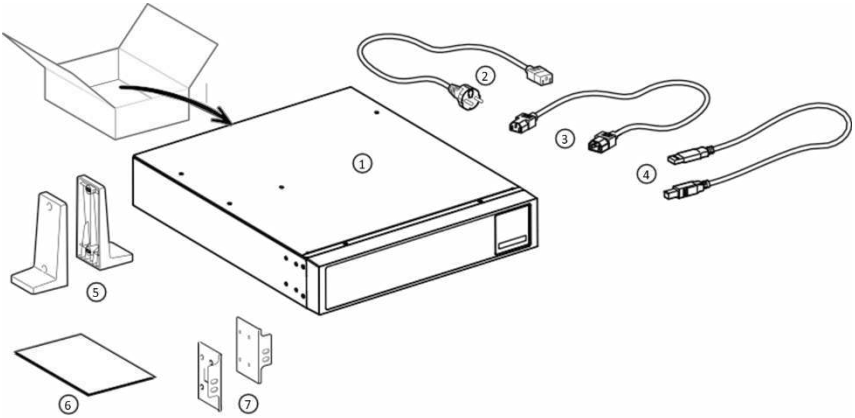

1	UPS
2	Input cable
3	Input cable
4	USB cable
5	Tower stands
6	User manual (English)
7	Rack ears

3.3 Install the Unit

Always keep 200 mm of free space behind the UPS rear panel.

Check that the indications on the name plate located on the top cover of the UPS meets to the AC-power source and the true electrical consumption of the total load.

1. Connect the UPS input socket to the AC-power source using the cable of the protected equipment.
2. Connect the loads to the UPS using the cables.

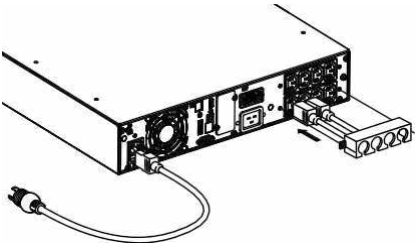

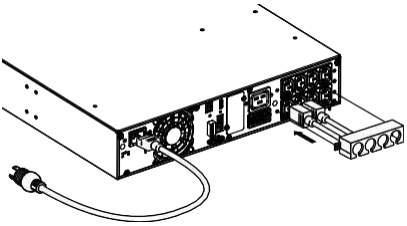

Compact model

Note: The UPS charges the battery as soon as it is connected to the AC-power source, even if button is not pressed.

Once the UPS is connected to the AC-power source, 8 hours of charging are required before the battery can supply the rated backup time.

- **Recommended upstream protection**

UPS model	Upstream circuit breaker
Tower 3KS	C curve-20A

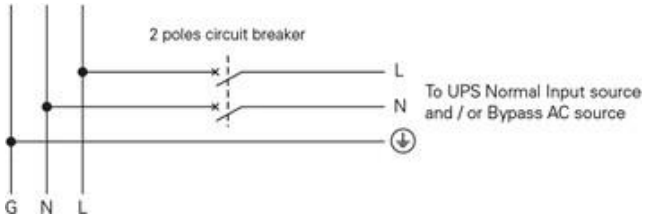

- **Input terminal and output terminal connection:**

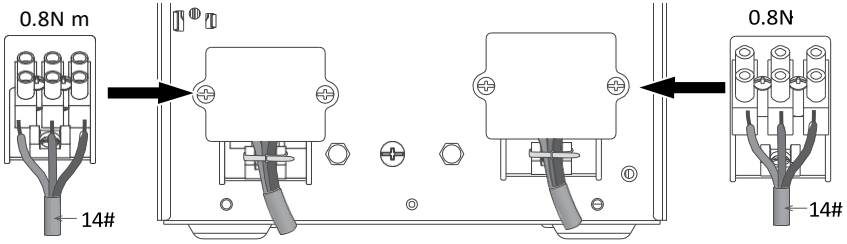

Tower 3KS	Minimum of section required/ Torque	Terminal-block capacity
Input L, N, G conductor cross section	2.5 mm²/(0.3N.m)	4 mm²
Output L, N, G conductor cross section	4 mm²/(0.8N.m)	10 mm²

Note: For Tower 3KS, the output cable should less than 3m.

When the cables connected to terminal block, the inner copper wire must not be exposed to avoid the risk of electric shock.

3.3.1 Rack Mount

- **Rack installation**

Follow steps 1 to 4 for module mounting on the rails.

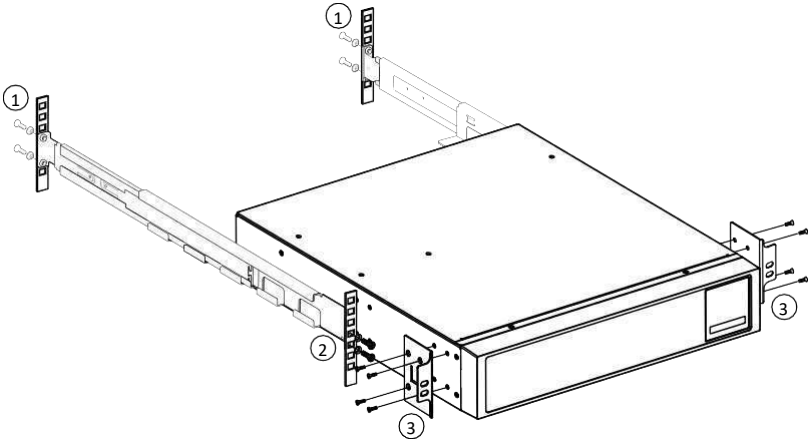

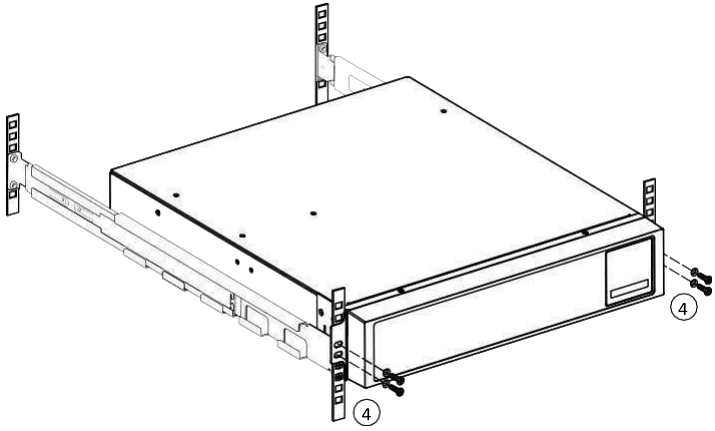

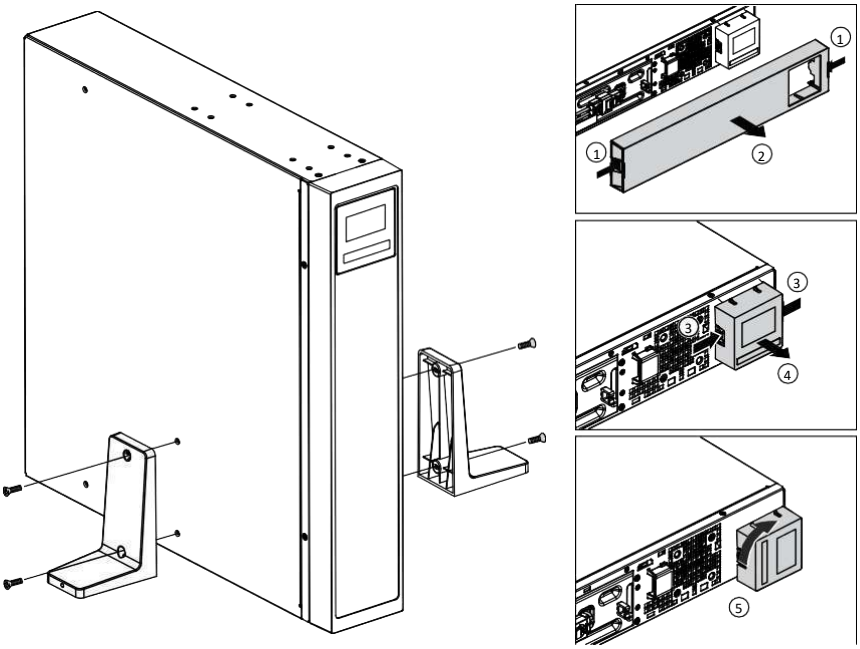

3.4 Connecting the EBM(s)

A small amount of arcing may occur when connecting an EBM to the UPS. This is normal and will not harm personnel.

Up to 4 EBMs can be connected to the UPS.

3.4.3 Rack models

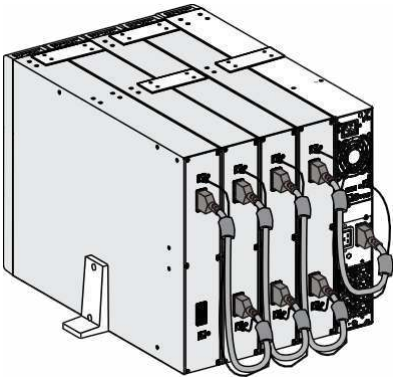

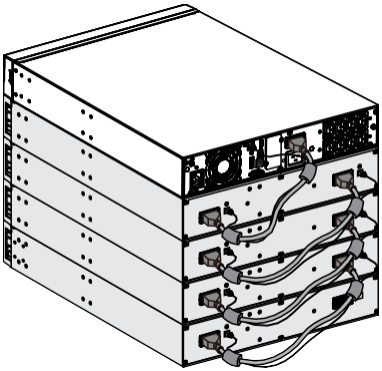

Compact model

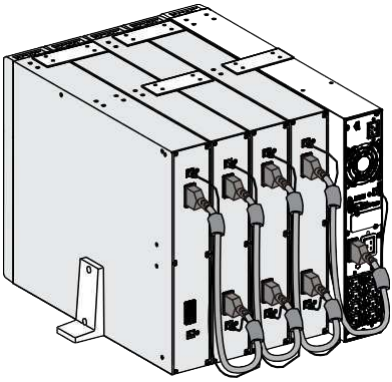

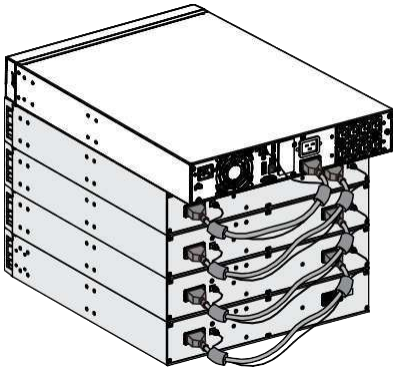

4 Operation

4.1 LCD panel

The UPS provides useful information about the UPS itself, load status, events, measurements and settings.

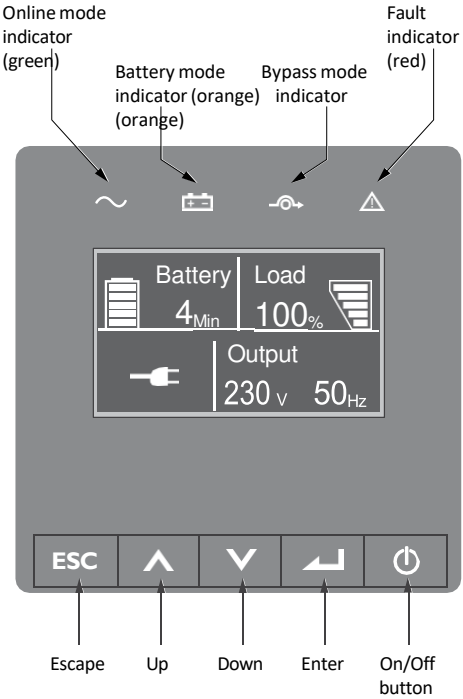

The following table shows the indicator status and description: Default Password :4732

Indicator	Status	Description
Green	On	The UPS is operating normally on Online or on High Efficiency mode.
Yellow	On	The UPS is on Battery mode.
Yellow	On	The UPS is on Bypass mode.
Red	On	The UPS has an active alarm or fault. See ***troubleshooting*** for additional information.

The following table shows the indicator status and description:

The button	Function	Illustration
	Power on	Press the Button for >100ms & < 1s can power on the UPS without utility input at the condition of battery connected
	Turn on	When the Unity is powered on, press the button for >1s can turn on the UPS
	Turn off	Press the button > 3s can turn off the UPS
	Scroll up	Press to Scroll up the menu option
	Scroll down	Press to Scroll down the menu option
	Enter menu	Select/Confirm the current selection
ESC	Exit the present menu	Press to exit present menu to Main menu or the higher-level menu without changing a setting
	Mute buzzer	Press the button to mute the buzzer temporarily, once new warning or fault is active, buzzer will work again

4.2 LCD description

The LCD backlight automatically dims after 10 minutes of inactivity. Press any button to restore the screen.

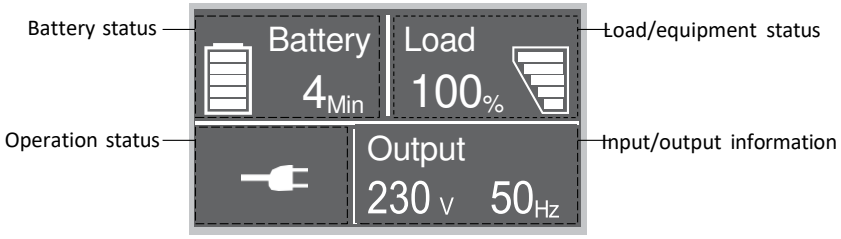

Operation status	Cause	Description
	Standby mode	The UPS is Off without output.
	Online mode	The UPS is operating normally and protecting the equipment.
1 beep every 4 seconds	Battery mode	A utility failure has occurred, and the UPS is powering the equipment with battery. Prepare your equipment for shutdown.
1 beep every 1 seconds	Battery mode with battery low	This warning is approximate, and the actual time to shutdown may vary significantly.
	High Efficiency mode	Once the mains are loss or abnormal, the UPS would transfer to Line mode or Battery mode and the load is supplied continuously.
	Converter mode	The UPS would free run with fixed output frequency (50Hz or 60Hz). The load should be derating to 60% in converter mode.
	Bypass mode	Overload or fault has occurred, or a command has been received, and the UPS is in Bypass mode.
	Battery test	UPS is executing a battery test
	Battery fail	The UPS detects bad battery or battery disconnected
	Overload	Some unnecessary loads should be cut off to reduce the load.
	Fault mode	Some fatal problems happened.

4.3 Display functions

When starting the UPS, the display is in the default UPS status summary screen.

Main menu	Submenu	Display information or Menu function
UPS status		UPS mode, IoT status, date/time, battery status and current alarms
Event log		Displays the events and faults stored
Measurements		[Load] W VA A P%, [Input/Output] V Hz, [Battery] % min V EBM, [DC Bus] V, [Temperature] C
Control	Go to Bypass	Transfers the UPS on Bypass mode
	Load segment	Load segment on/off
	Start battery test	Starts a manual battery test
	Reset fault state	Clear active fault
	Reset event list	Clear events and faults
	Reset com card /Reset IoT	Reset IoT and Modbus TCP function inside UPS
	Restore factory settings	Restore to default factory settings
Settings		Refer to ***User settings***
Identification		[Product name], [Serial number], [firmware version], [IP/MAC address]

4.4 User settings

Submenu	**Available settings**	**Default settings**
Password	Can be changed by user	4732
Change language	English, Italiano, Français, Deutsch, Español, Русский, Polski,简体中文	English
User password	[enabled, ****], [disabled]	enabled
Audible alarms	[enabled], [disabled]	enabled
Output voltage	[200V], [208V], [220V], [230V], [240V]	[230V] [240V] for AU
Output frequency	[autosensing], [converter 50Hz, 60Hz]	autosensing
High efficiency mode	[disabled], [enabled]	disabled
Auto bypass	[disabled], [enabled]	disabled
Start/Auto restart/Start from bypass	[disabled], [enabled]	Cold start/Auto restart: enabled Start from bypass: disabled
Site wiring fault	[enabled], [disabled]	disabled
Overload pre-alarm	[50%~105%]	105%

Submenu	Available settings	Default settings
External battery	[Auto detection], [Manual EBM: 0~4], [Manual Ah: 7~144Ah]	Auto detection 0 EBM
Charger current	[2A], [4A], [6A], [8A] for long backup model	4A 2A (For compact model)
Dry in signal	[Disabled], [Remote on], [Remote off], [Forced bypass]	disabled
Dry out signal	[load powered], [on bat], [Low bat], [bat open], [by-pass], [ups ok]	bypass
Ambient temperature alarm	[enabled], [disabled]	enabled
Battery remaining time	[enabled], [disabled]	enabled
Date and time	dd/mm/yyyy hh:mm	01/01/2020 00:00
LCD contrast	[-5 ~ +5]	[0]
IoT	[enabled], [disabled]	disabled
Modbus TCP	[enabled], [disabled]	disabled

If the load type is a transformer type, it is recommended to enable the “start from bypass” function.

4.5 Starting the UPS with utility

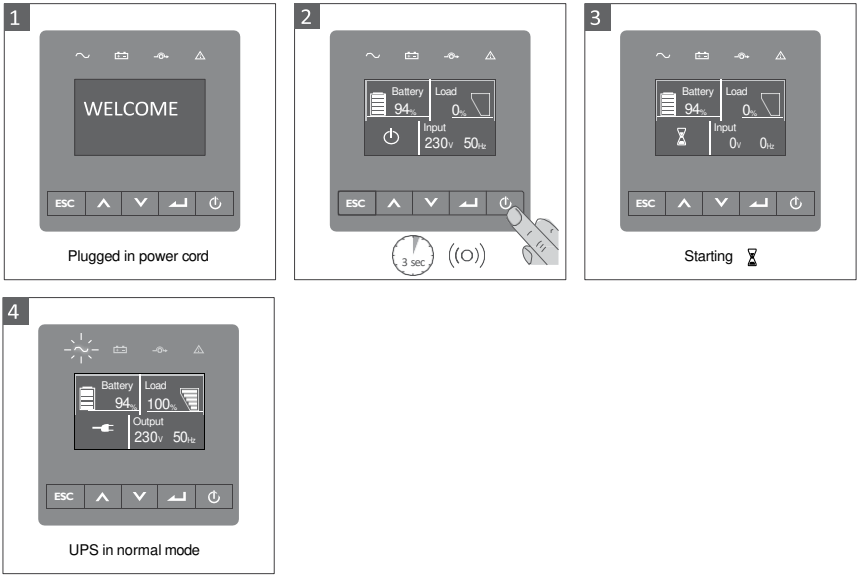

4.6 Starting the UPS on Battery

Before using this feature, the UPS must have been powered by utility power with output enabled at least once.

Battery start can be disabled. Refer to the Chapter ***User setting***.

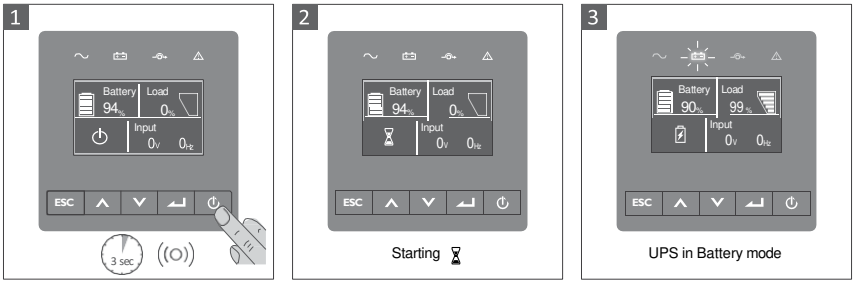

4.7 UPS Shutdown

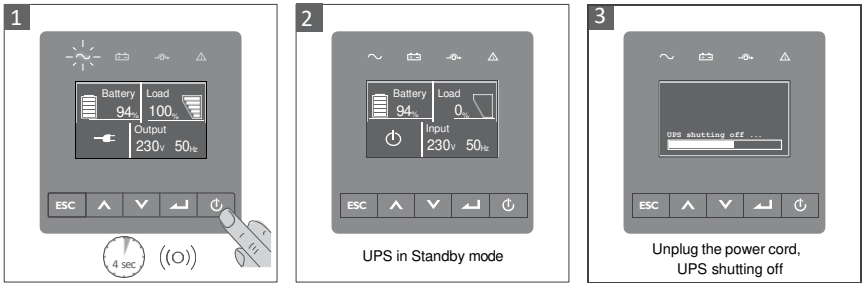

5 Communication

5.1 RS232 and USB

1. Communication cable to the serial or USB port on the computer.
2. Connect the other end of the communication cable to the RS232 or USB communication port on the UPS.

5.2 UPS remote control functions

- **Remote Power Off (RPO)**

When RPO is activated, UPS will cut off output immediately, and continues to alarm.

RPO	Comments
Connector type	16 AWG Maximum wires
External breaker specification	60 V DC/30 V AC 20 mA max

- **Dry in**

Dry in function can be configured (see Settings > Dry in)

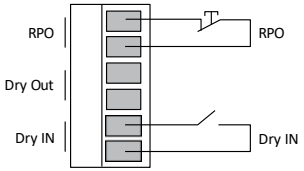

Dry in	Comments
Connector type	16 AWG Maximum wires
External breaker specification	60 V DC/30 V AC 20 mA max

- **Dry out**

Dry out is the relay out, dry out function can be configured (see Settings > Dry out).

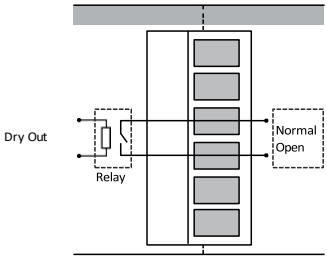

Dry out	Comments
Connector type	16 AWG Maximum wires
Inner Relay specification	24Vdc/1A

5.3 IoT

Built-in ethernet port and WLAN (optional accessary) port enable market-leading and easy-to-use IoT solutions for:

- Winpower View mobile app which allows you to remote monitor UPS(s) and keep informed about critical UPS event always.
- Remote report UPS faults and status (contact with your service for detail) from APP or registered APP account (Email address).
- Automatic UPS and battery warranty alert from APP or registered APP account (Email address).

IoT Connection

-Wired connection

1. Connect UPS and router or switch with network cable

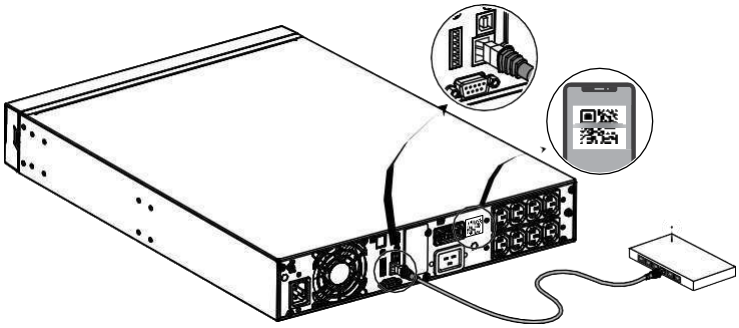

Please use CAT6 shielded network cable.

The Position of QR code on the UPS is for reference, subject to the actual UPS label.

Make sure your IT settings can access the public network and Microsoft Azure Cloud.

2. Enable the IoT function in LCD (see Settings-> IoT)
3. Search the “WinPower View” from Google Play store or Apple APP store, downloading and installing.
4. Open the app, register an account, log in, follow the instructions of the app.
5. Tap ⊕ on the upper right corner, scan the SN barcode on UPS label to add device.

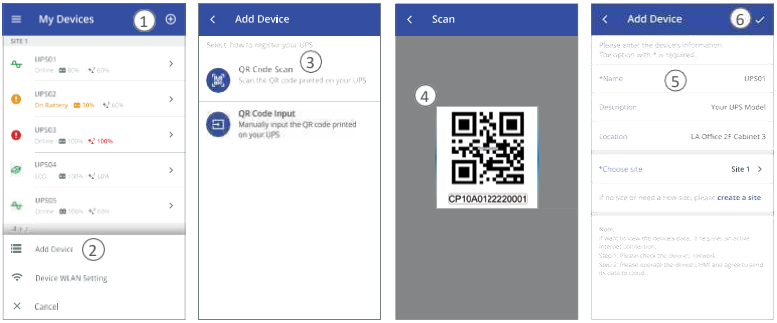

For more detail information and Q&A about the IoT and APP, please refer to the HELP menu in the app.

WinPower View is a mobile app which allows you to centralized monitoring UPS(s) connected to cloud. Please download it from Google Play store or Apple APP store.

Please refer to the ***Modbus TCP*** for IoT connection.

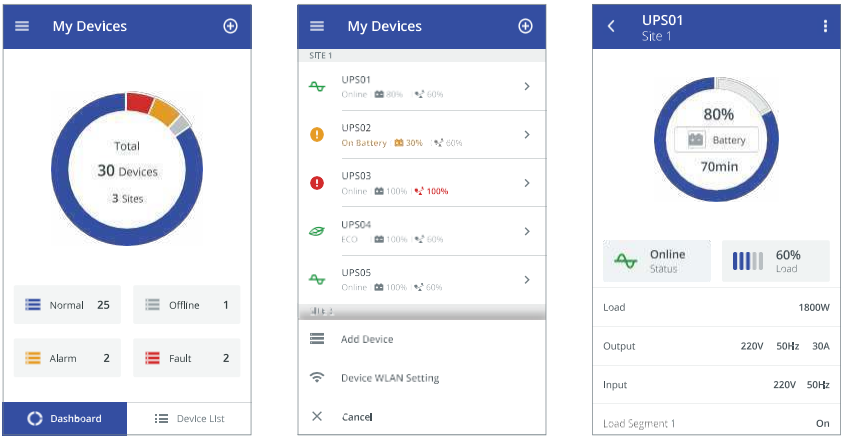

5.4 Modbus TCP

Built-in ethernet port offers Modbus TCP feature to facilitate remote monitoring of the UPS into your own software. Contact with your service for protocol details.

5.5 Optional Card

Intelligent Card allow the UPS to communicate with different types of devices in variety of networking environments. The UPS could use the following connectivity cards, please contact your local distributor for details.

- NMC Card- Ideal monitoring solution enables user to monitor and control the status of UPS on web browser via internet.
- CMC card -provides connection to Modbus protocol with standard RS485 signal.
- Dry card- Provides voltage-free dry-contact signals for programmable controller and management system.
- EMP - Supports temperature and humidity sensors for remote environment monitoring, should work with NMC Card.

5.6 UPS Management Software

5.6. WinPower

WinPower provides user-friendly interface to monitor and control your UPS. This unique software provides safely auto shutdown for multi-computer systems while power failure. With this software, users can monitor and control any UPS on the same LAN no matter how far from the UPSs.

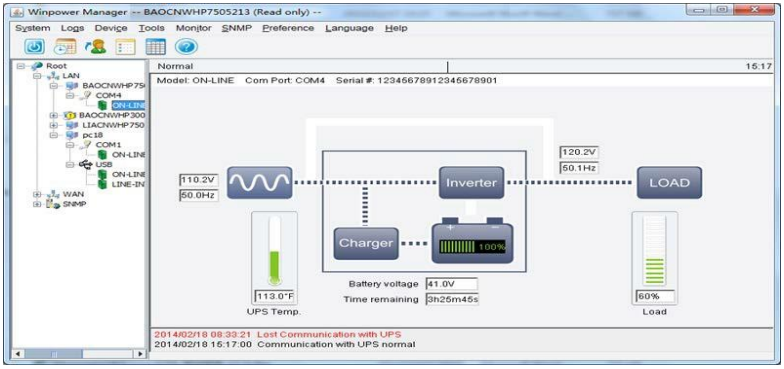

Installation procedure:

1. Go to the website:

   http://www.ups-software-download.com/content/ups-download-software/download.html
2. Choose the operation system you need and follow the instruction described on the web-site to download the software.
3. When downloading all required files from the internet, enter the serial No: **511C1-01220-0100-478DF2A** to install the software.

   When you finish installation, restart your computer, the WinPower software will appear as a green plug icon located in the system tray, near the clock.
4. The Default **Password : Administrator** , First login please change password. More about Winpower software

   detail via our website: www.level1.com

5.6.5 UPS Web Page

Open a web browser(Recommend using Google Chrome or Edge), key in IoT device's IP address, currently IP address show on "**LCD Identification Ethernet IP**" default DHCP mode.

Default username: admin

Default password: Admin*1

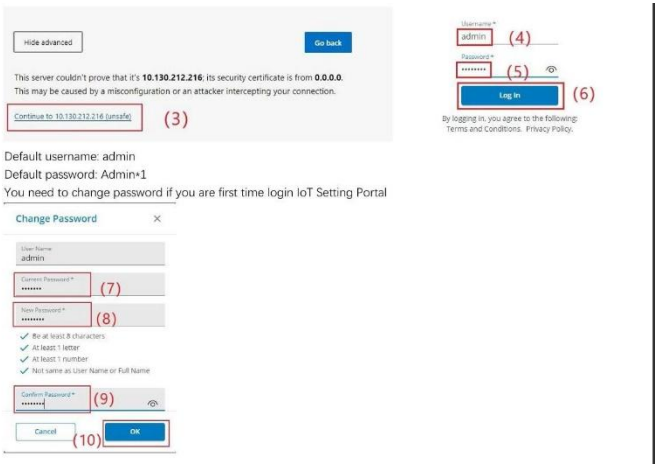

6 UPS maintenance

6.1 Equipment care

For the best preventive maintenance, keep the area around the equipment clean and dust free. If the atmosphere is very dusty, clean the outside of the system with a vacuum cleaner. For full battery life, keep the equipment at an ambient temperature of 25°C (77°F).

The batteries are rated for a 3-5-year service life. The length of service life varies, depending on the frequency of usage and ambient temperature. Batteries used beyond expected service life will often have severely reduced runtimes. Replace batteries at least every 4 years to keep units running at peak efficiency.

6.2 Transporting the UPS

Please transport the UPS only in the original packaging. If the UPS requires any type of transportation, verify that the UPS is disconnected and turned off.

6.3 Storing the equipment

If you store the equipment for a long period, recharge the battery every 6 months by connecting the UPS to utility power. Recommends that the batteries charge for 48 hours after long-term storage.

If batteries were never recharged over 6 months, do not use them. Contact your service representative.

6.4 Replacing batteries

DO NOT DISCONNECT the batteries while the UPS is in Battery mode.

Consider all warnings, cautions, and notes before replacing batteries.

- Servicing should be performed by qualified service personnel with knowledgeable of batteries and required precautions. Keep unauthorized personnel away from batteries.

- **Replacing the internal battery**

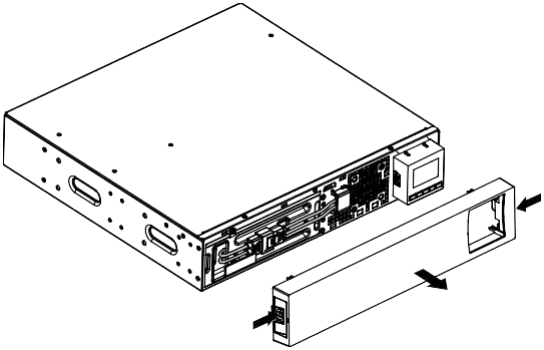

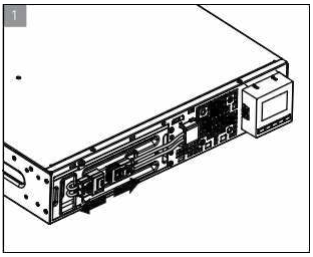

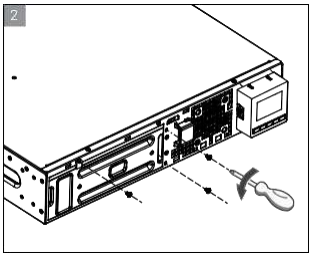

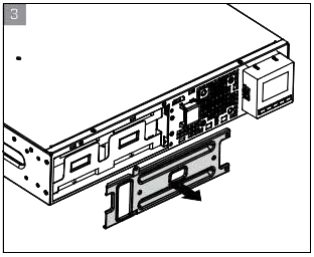

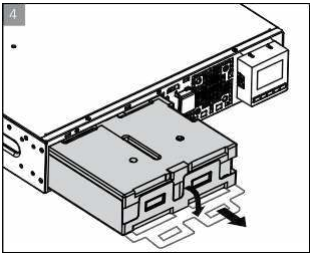

1. Put the new battery pack into the UPS.
2. Screw back the metal protection covers and the front panel.
3. Testing new batteries.

Verify that the replacement batteries have the same rating and brand as the batteries being replaced.

6.5 Recycle

Contact your local recycling or hazardous waste center for information on proper disposal of the used equipment.

Do not dispose of the batteries in the fire. Which may cause battery explosion. The batteries must be rightly disposed according to local regulation.

Do not open or destroy the batteries. Escaping electrolyte can cause injury to the skin and eyes. It may be toxic.

Do not discard the batteries in the trash.

Pb

This product contains sealed lead acid batteries and must be disposed as it's explained in this manual. For more information, contact your local recycling centers, re-use and treatment facilities.

The crossed-out wheeled bin symbol indicates that waste electrical and electronic equipment should not be discarded together with unseparated household waste but must be collected separately. The product should be handed in for recycling in accordance with the local environmental regulations for waste disposal.

By separating waste electrical and electronic equipment, you will help reduce the volume of waste sent for incineration or land-fills and minimize any potential negative impact on human health and environment.

7 Troubleshooting

Typical alarms and faults:

To check the UPS status and Event log:

1. Press any button on the front panel display to activate the menu options.
2. Press the button to select Event log.
3. Scroll through the listed events and faults.

The following table describes typical conditions.

Conditions	Possible cause	Action
Battery mode LED is On. 1 beep every 4 seconds.	A utility failure has occurred, and the UPS is in Battery mode.	The UPS is powering the equipment with battery power. Prepare your equipment for shutdown.
Battery low LED is On. 1 beep every second.	The UPS is in Battery mode and the battery is running low.	This warning is approximate, and the actual time to shutdown may vary significantly.
No battery LED is On. Beep continuous.	The batteries are disconnected.	1. Verify that all batteries and detective cable (RJ45) are properly connected. 2. Check the LCD menu: Settings – External battery. If select the “Manual EBM” and Value is 0, please set the right value.
Battery fault LED is On. Beep continuous.	The battery test is failed due to bad or disconnected batteries, or the battery minimum voltage is reached in OBM cycling mode.	Verify that all batteries are properly connected. Start a new battery test: if the condition persists, contact your service representative.
The UPS does not provide the expected backup time.	The batteries need charging or service.	Apply utility power for 48 hours to charge the batteries. If the condition persists, contact your service representative.
Bypass mode LED is on.	An overload or a fault has occurred, or a command has been received and the UPS is in Bypass mode. Or auto bypass function is enabled.	Equipment is powered but not protected by the UPS. Check for one of the following alarms: overtemperature, overload, UPS failure or auto bypass setting.

Conditions	Possible cause	Action
Power overload LED is On. 1 beep every second.	Power requirements exceed the UPS capacity (greater than 105% of nominal;	Remove some of the equipment from the UPS. The alarm resets when the condition becomes inactive.
over temperature warning LED is On. 1 beep every second.	The UPS internal temperature is too high. At the warning level, the UPS generates the alarm but remains in the current operating state.	Clear vents and remove any heat sources. Ensure the airflow around the UPS is not restricted.
The UPS does not start.	The input source is not connected correctly.	Check the input connections.
	The Remote Power Off (RPO) switch is active or the RPO connector is missing.	If the UPS Status menu displays the “Remote Power Off” notice, inactivate the RPO input.
Emergency power off	RPO is active	1. Check the RPO connector status 2. Reset the RPO fault through LCD. Main menu – Control- Reset fault state.
Fan fault	Fan abnormal	Check if the fan is running normally
Site fault	Phase and neutral conductor at input of UPS system are reversed	Site Fault detection disabled by default. It can still be enabled / disabled from the LCD settings menu. Reconnect all input wires.
Over temperature fault	Over temperature is too high, UPS goes to bypass or stopped.	Check the ventilation of the UPS and check the ambient temperature.
Output short circuit	Output short circuit occurred.	Check the output of UPS and loads, make sure the short circuit is removed before turning on again.
APP cannot connect to UPS	IoT is disabled	Enable IoT function in LCD
	Your IT settings may block UPS get cloud connected (NTP, Proxy, etc.)	please refer to WinpowerView app help file

8 Specifications

8.1 UPS Block Diagram

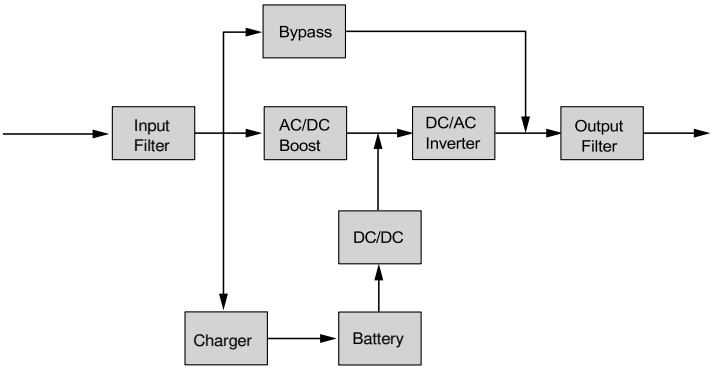

8.2 UPS Specification

Model name		UPS-2101	UPS-2102	UPS-2103
Power rating	VA/Watt	1000VA/1000W	2000VA/2000W	3000VA/3000W
Efficiency	Line mode	89%	93%	
	ECO mode	96%	97%	
Input performance	Voltage range	160-300V 100% load, 110-160V derating to 50% load linearly		
	Rated frequency	50Hz/60Hz		
	Frequency range	40Hz-70Hz (45Hz-55Hz, 54Hz-66Hz @ load>60%)		
	PF	>0.99		
	THDI	<5%		
Input connection	Socket (RT)	1x IEC C14	1x IEC C20	
	Socket (Tower)	1x IEC C14	1x IEC C20	
Output performance	Rated voltage	200/208/220/230/240 VAC (derating 10% at 208V, derating 20% at 200V)		
	Rated frequency	50Hz/60Hz		
	Maximum PF	PF = 1		
	Voltage accuracy	±1%		
	THDv	<1% linear load; <5% nonlinear load		
	Transfer time	0ms@line <-> battery; 4ms @ line <-> bypass; 10ms @ ECO <->Inverter		
	Crest Ratio	Max 3:1		
	Overload	100%<load≤105% continuous. 105%< load ≤125% for 5 minutes 125<load≤150% for 30 seconds. >150% for 500ms.		

Model name		UPS-2101	UPS-2102	UPS-2103
Output connection	Socket (RT)	1 main outlet group (with 4 x IEC C13) 1 programmable outlet group (with 4 x IEC C13)		1 main outlet group (with 1 x IEC C19 + 4 x IEC C13) 1 programmable outlet group (with 4 x IEC C13)
	Socket (Tower IEC)	4 x IEC C13	8 x IEC C13	8 x IEC C13 1x IEC C19
	Load segment control	RT: Yes, 1 programmable load segment control Tower: NA		
Short-circuit current (RMS) /protect time	Bypass mode	550A/2.8ms	699A/7ms	699A/7ms
	Normal/Battery mode	20A/100ms	36A/100ms	54A/100ms
Battery	Voltage	36VDC	72VDC	72VDC
	Capacity (AH)	3 x 12V 7Ah	6 x 12V 7Ah	6 X12V 9Ah
Maximum EBM quantity		4		
EBM auto detection		Yes		
Battery Hot swappable		Yes		
Charger	Charging method	Optimize Battery Management (OBM)		
	Charging current	1.5A	1.5A	1.5A
	Recharging time	3h to 90%	3h to 90%	3h to 90%
Other mode	CVCF	Yes (derating to 60% load)		
HMI	Display	Dot matrix LCD (optional segment LCD)		
	Language	Multi-Language		
	USB	USB 2.0 with HID power device		
	RS232	Yes (DB9)		
	Dry in/out	1 programmable dry in; 1 programmable dry out		
	RPO	Yes		
	Intelligent slot	Yes (for long card)		
	Network card	Optional, NMC long card		
	Modbus card	Optional, CMC Long Card		
	Dry contactor card	Optional, Dry contactor Card		
	Wireless module	Optional		
	IOT Ethernet port	RJ45		
	Monitor software	Winpower, Winpower View APP		
		More information Please vis our Web : WWW.level1.com		

		UPS-2101	UPS-2102/UPS-2103
Physical perfor-mance	Dimension (W*D*H) mm	RT: 438*445*85.5(2U)	RT: 438*600*85.5(2U) Compact RT: 438*505*85.5(2U)
	IP protection level	IP20	
	Plug solid	Optional	
	Wheel	No	
Environment	Operating temperature	RT: 0-40ºC Tower: 0-45ºC, 40-45ºC derating to 80%	
	Relative Humidity	0-95%	
	Operating Altitude	0~3000m(the load derating 1 % every up 100m @1000~3000m)	
	Acoustic Noise	<45dB at front 1m	<50dB at front 1m
Certification		CE, IEC/EN 62040	
EMC		EN IEC 62040-2 C2	
Accessory	Input power cable	Yes	
	Output power cable	Yes (For IEC models)	
	EBM cable	Yes (in EBM)	
	USB cable	Yes	
	RS232 cable	Optional	
	Rail kit	Optional	
	Tower Feet	RT: Yes; Tower: No	
	Rack ear	RT: Yes; Tower: No	
	Manual (English)	Yes	