DRM12A

2000W 12" ARRAYABLE POWERED LOUDSPEAKER

DRM12A

The DRM12A 2000W 12″ Arrayable Powered Loudspeaker delivers class-leading power via an ultra-efficient Class-D amplifier with next-gen protection and Power Factor Correction technology for peak performance when you need it.

Advanced Impulse™ DSP provides acoustic correction and time-alignment via precision tuned FIR filters for crystal clear, punchy sound typically experienced only with massive touring systems. The DRM Control Dashboard™ features a high-contrast, full-color display for quick access to EQ, voicing modes and more.

A custom high-excursion 12″ woofer and three 1″ compression drivers housed in the texture coated 15mm plywood cabinet are designed for consistent performance in the most demanding applications. The DRM12A is perfect for clubs, houses of worship, rental systems and more.

APPLICATIONS:

Large theaters/band PA systems, houses of worship, DJs, rehearsal spaces, gymnasiums, banquet halls, A/V rentals and many, many more.

FEATURES:

- High-efficiency 2000W Class-D amplifier offers ample headroom for professional applications
  - Universal power supply (100-240 VAC) with Power Factor Correction technology ensures consistent performance even with unstable AC power
  - Next-gen protection circuitry keeps transducers safe and ensures peak performance in all applications
- Advanced Impulse™ DSP module
  - Precision crossovers and transducer time-alignment deliver reference quality sound that is consistent throughout the frequency range
  - Cutting-edge FIR Filtering technology drastically reduces inherent anomalies, phase issues, and muddy midrange resulting in crystal clear sound
- DRM Control Dashboard™ features a high-contrast full color display for easy single-knob access to configuration, processing, and more
  - View current EQ and voicing mode, high-resolution metering, and more from a single overview window
  - Preset array configuration settings make setup easy with modes for 1 cabinet, 2 cabinets, 3-4 cabinets with long throw option, and independent Sub option w/ variable crossover
  - Adjustable 3-band parametric EQ allows for additional customization and tuning for your application and venue
  - Alignment Delay control for delay stacks
  - Save and recall up to 6 user presets for various applications and venues
  - Screensaver plus dimmer and contrast control
  - System lock with 4-digit passcode
- Parallel XLR Input and Output
- Premium components and cabinet design
  - Road-worthy 15mm plywood construction and internal bracing offers optimal acoustic performance with a touring-grade textured coating and powder-coated heavy gauge steel grille
  - Unique ported design provides exceptionally smooth yet punchy low frequency response while providing cool air to the internal amplifier
  - Triple 1″ Titanium diaphragm compression driver array is perfectly matched to the amplifier for maximum clarity and efficiency
  - 12″ high-excursion woofer offers minimal distortion with increased bass response and reliability to withstand the most demanding live applications
- Versatile configuration options
  - Dual-angle pole mount
  - Flyable with up to 4 DRM12A cabinets and 2 DRM18S subwoofers using the FB100 Fly Bar
  - 7 x M10 flypoints
  - Integrated flying hardware
  - Optional FB100 Fly Bar
- Max SPL: 135 dB
- Coverage: 20°V x 110°H
- 55.0 lb / 24.9 kg

Like us

Follow us

Watch our dang videos

DRM12A SPECIFICATIONS

Acoustic Performance

Frequency Range (–10 dB):	50 Hz – 20 kHz
Frequency Range (–3 dB):	65 Hz – 20 kHz
Horizontal Coverage Angle:	110º
Vertical Coverage Angle:	20º
Maximum SPL Peak:	135 dB

Transducers

Low Frequency:	12 in / 305 mm mm woofer with ferrite
High Frequency:	3x 1.0 in / 25 mm titanium dome compression drivers

Array Coverage

Horizontal Coverage (–6 dB):	110˚ averaged 2 kHz to 10 kHz
Vertical Coverage (–6 dB):	
1x DRM12A	20˚ averaged 2 kHz – 10 kHz
2x DRM12A	40˚ averaged 2 kHz – 10 kHz
3x DRM12A	60˚ averaged 2 kHz – 10 kHz
4x DRM12A	80˚ averaged 2 kHz – 10 kHz

Array Mode

Single:	Voicing for an array with 1 DRM12A
Dual:	Voicing for an array with 2 DRM12As
3 – 4:	Voicing for an array with 3-4 DRM12As
3 – 4 Long:	Long Throw Voicing for an array with 3-4 DRM12As

Power Amplifiers

System Power Amplification	
Rated Power:	2000 watts peak
Low Frequency Power Amplifier	
Rated Power:	1620 watts peak
Rated THD:	< 1%
Cooling:	Convection
Design:	Class D
High Frequency Power Amplifier	
Rated Power:	380 watts peak
Rated THD:	< 1%
Cooling:	Convection
Design:	Class D

System Processing

Array Mode:	4 array modes
Subwoofer HPF:	Off, DRM18S, Var
Main Output EQ:	3-band
Delay:	0 – 100 ms

Equalization

Low:	±12 dB @ 20 Hz – 200 Hz
Mid:	±12 dB @ 200 Hz – 2.00 kHz
High:	±12 dB @ 2.00 kHz – 20.0 kHz
HPF:	40 Hz – 160 Hz (Var)

Input / Output

Input Type:	Female XLR Balanced
Mic Impedance:	8 kΩ balanced
Output Type:	Male XLR Balanced
Mix Out Impedance:	600 Ω balanced
Main Control:	Rotating Knob

Electronic Crossover

Crossover Type:	24 dB/octave
Crossover Frequency:	1.0 kHz

Line Input Power

Detachable line cord:	100 – 120 VAC, 50 – 60 Hz, 175W 220 – 240 VAC, 50 – 60 Hz, 175W
AC In Connector:	Locking Neutrik PowerCon® A, 20 amp, 250 VAC, Max input 1400W
AC Thru Connector:	Locking Neutrik PowerCon® B, 20 amp, 250 VAC, Max input 1250W
Power Supply Type:	Switchmode

Safety Features

Input Protection:	Peak and RMS limiting, power supply and amplifier thermal protection
Display LEDs:	Defeatable front power, Speaker Control
Status Info:	Input and output levels, array mode, high-pass filter, EQ and delay settings

DRM12A SPECIFICATIONS CONTINUED...

Construction Features

Basic Design:	Horizontal Trapezoidal
Enclosure Material:	15 mm plywood
Enclosure Finish:	Black Polyurea
Grille Material:	16-18 gauge perforated steel
Grille Finish:	Powder-coated black
Handles:	One on each side
Display LEDs	
Front:	Power ON
Rear:	Speaker Control
Operating Temperature:	0 – 40 °C 32 – 104 °F

Physical Properties (product)

Height	15.2 in / 386 mm
Width	24.7 in / 627 mm
Depth	18.0 in / 457 mm
Weight	55.0 lb / 24.9 kg

Physical Properties (packaged product)

Height	18.9 in / 480 mm
Width	28.4 in / 721 mm
Depth	21.1 in / 536 mm
Weight	62.0 lb / 28.1 kg

Mounting Methods

Floor mount, pole mount via the built-in socket on the bottom of the cabinet [Be sure the pole is capable of supporting the weight of the DRM12A loudspeaker] or fly via the integrated M10 mounting points (using M10 x 1.5 x 20 mm forged shoulder eyebolts).

Options

DRM12A Cover:	P/N 2036809-52
FB100 Flybar Kit:	P/N 2050041
SPM400 Loudspeaker Pole Mount:	P/N 2051055
PA-A2 Forged Shoulder Eyebolt Kit (3 x M10 x 1.5 x 20 mm)	P/N 2051054

Ordering Information

DRM12A 2000W 12" Arrayable Powered Loudspeaker, US	P/N 2050091-00
DRM12A 2000W 12" Arrayable Powered Loudspeaker, EU	P/N 2050091-01
DRM12A 2000W 12" Arrayable Powered Loudspeaker, UK	P/N 2050091-03
DRM12A 2000W 12" Arrayable Powered Loudspeaker, AU	P/N 2050091-04
DRM12A 2000W 12" Arrayable Powered Loudspeaker, CN	P/N 2050091-05
DRM12A 2000W 12" Arrayable Powered Loudspkr, BZ ~120V	P/N 2050091-06
DRM12A 2000W 12" Arrayable Powered Loudspeaker, AR	P/N 2050091-07

DRM12A DIMENSIONS

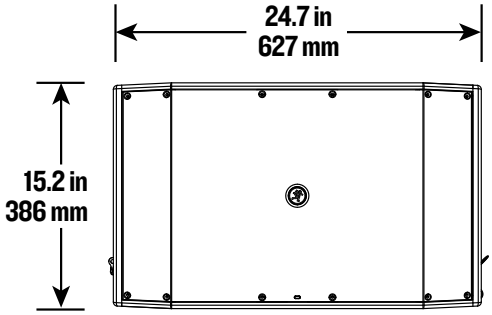

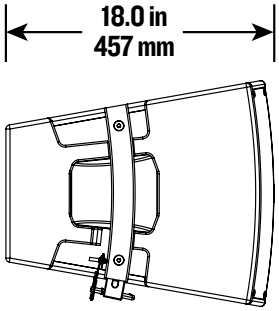

DRM12A FREQUENCY GRAPH

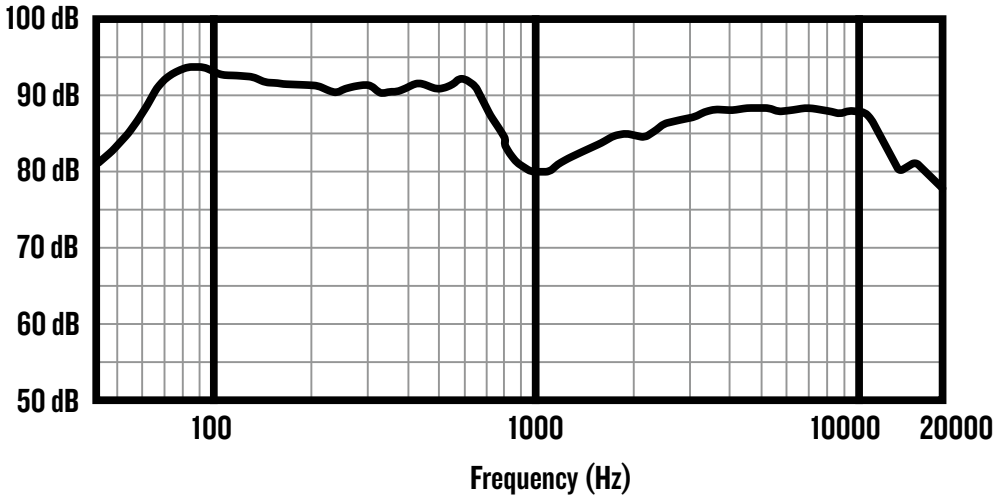

DRM12A MOUNTING POINTS

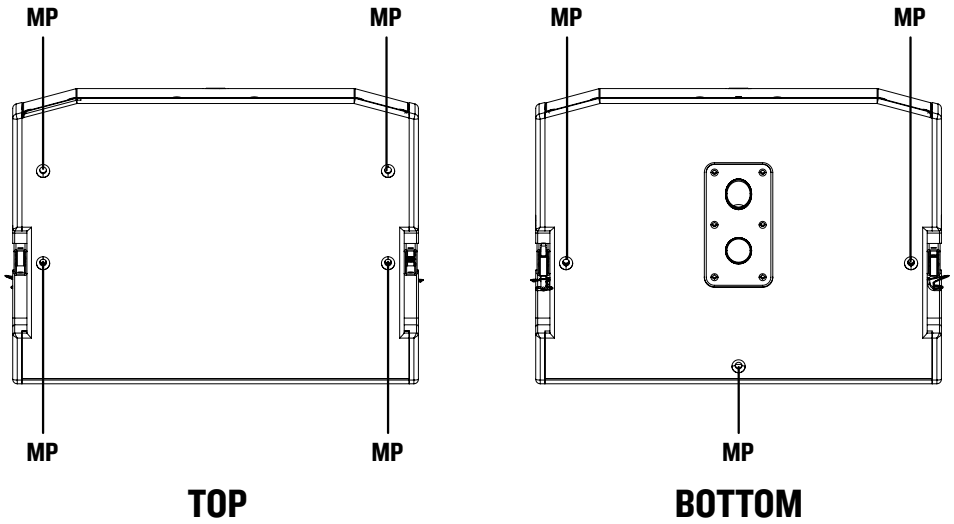

DRM12A RIGGING POSSIBILITIES

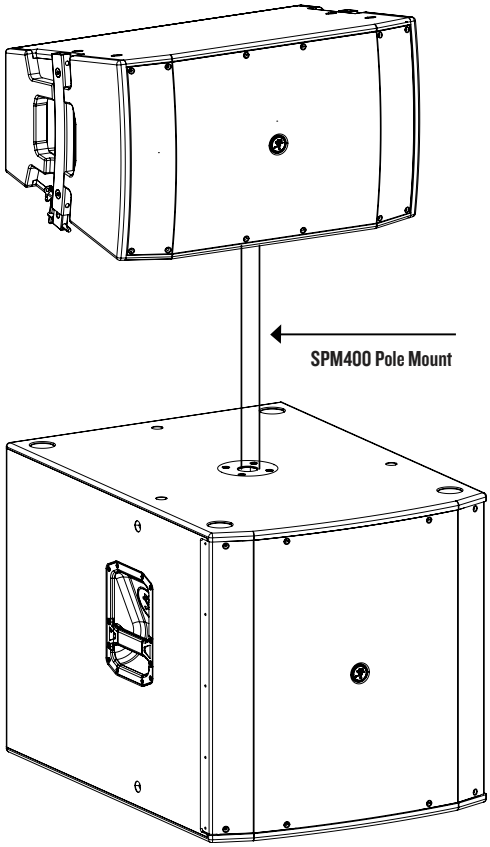

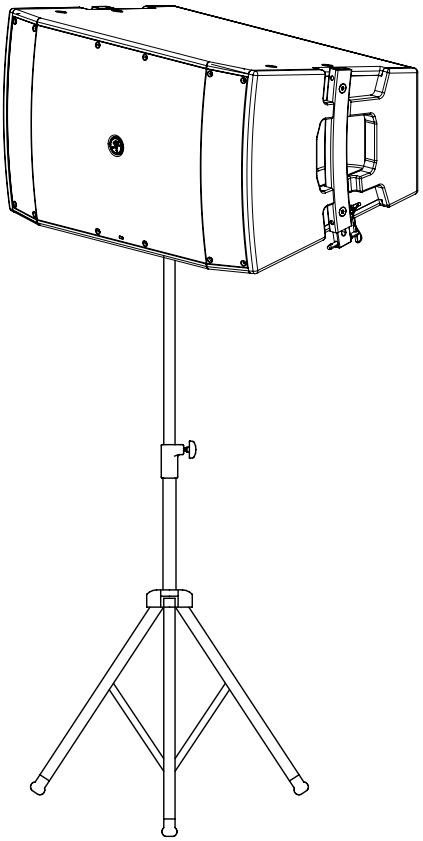

DRM12A RIGGING POSSIBILITIES

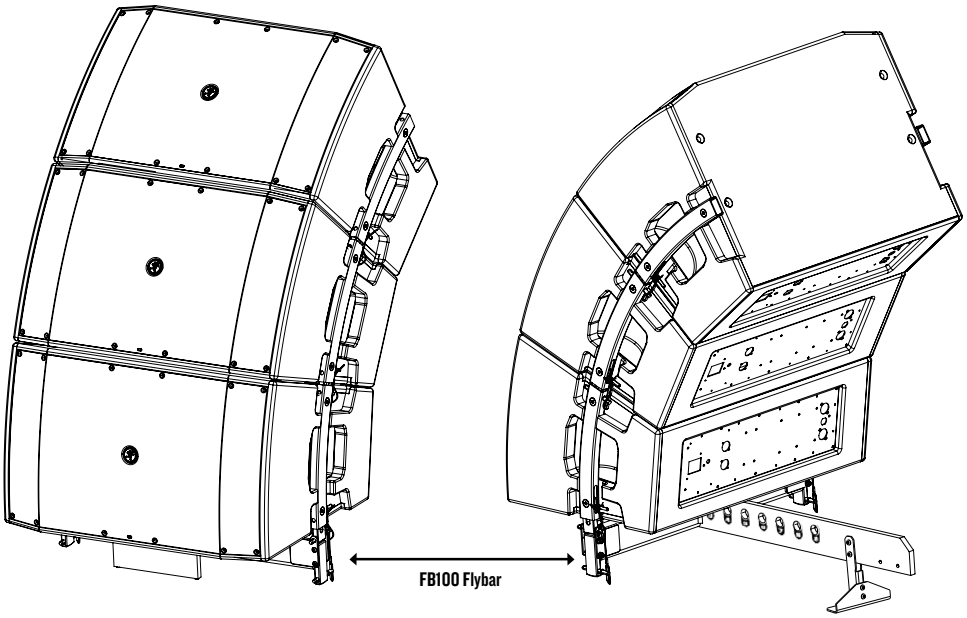

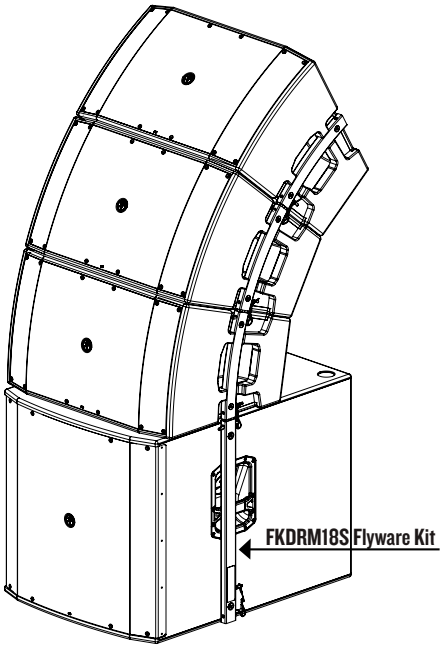

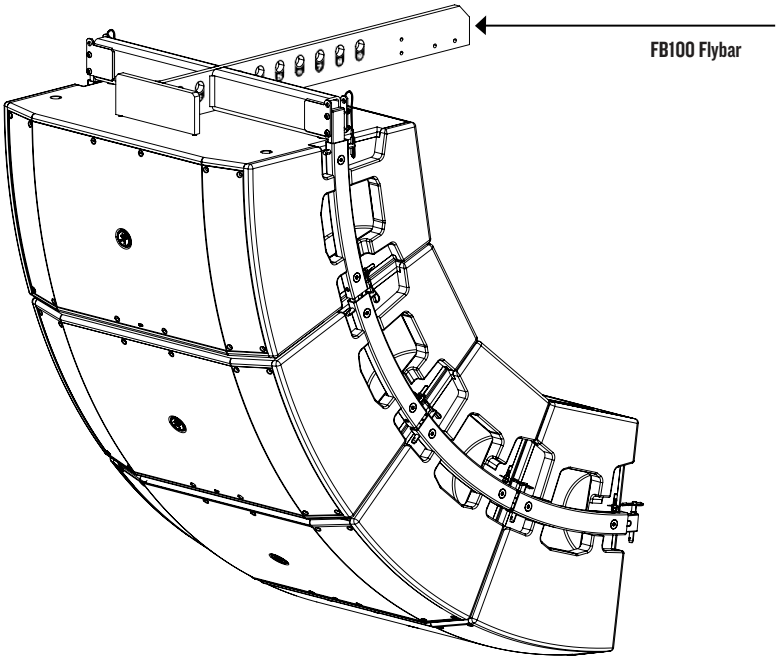

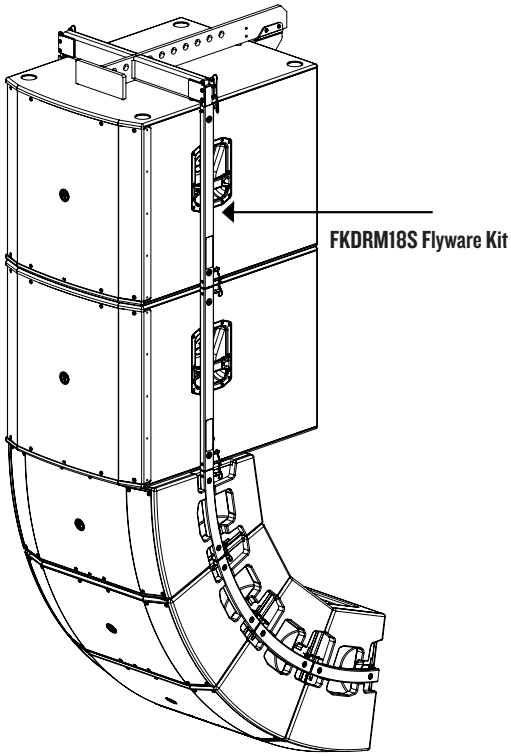

DRM12A BLOCK DIAGRAM

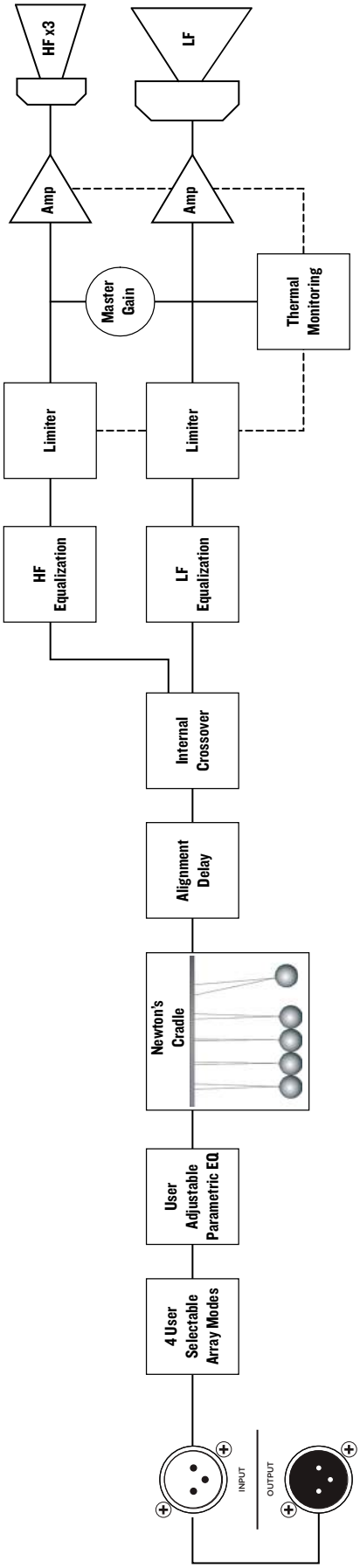

DRM12A REAR PANEL

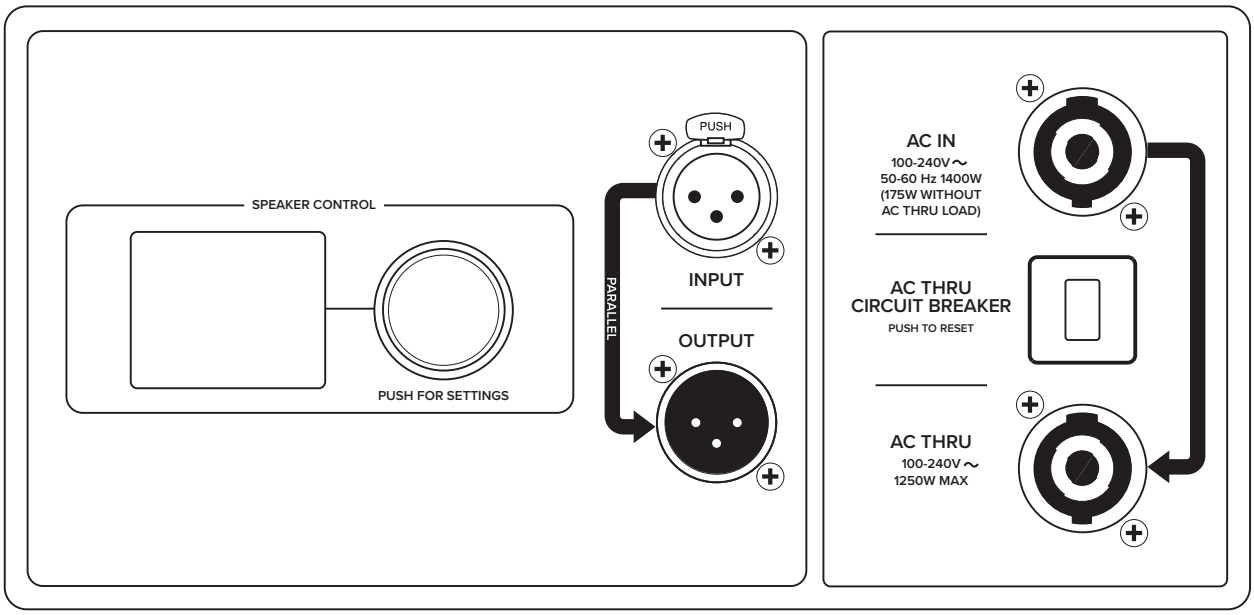

LOUD Audio, LLC. is always striving to improve our products by incorporating new and improved materials, components, and manufacturing methods. Therefore, we reserve the right to change these specifications at any time without notice.

"Mackie" and the "Running Man" figure are registered trademarks of LOUD Audio, LLC. All other brands mentioned are trademarks or registered trademarks of their respective holders, and are hereby acknowledged.

©2019 LOUD Audio, LLC. All rights reserved.

Electronic files for this product are available at:
www.mackie.com

Specification Sheet	DRM12A_SS.PDF
Owner's Manual	DRM12A_OM.PDF

MACKIE.
www.mackie.com
16220 Wood-Red Road NE
Woodinville, WA 98072 USA
800-898-3211, Fax 425-487-4337

Part No. SW1273 Rev. B 06/19