DRM12A

2000W 12″ Arrayable Powered Loudspeaker

OWNER'S MANUAL

MACKIE®

Important Safety Instructions

1. Read these instructions.
2. Keep these instructions.
3. Heed all warnings.
4. Follow all instructions.
5. Do not use this apparatus near water.
6. Clean only with a dry cloth.
7. Do not block any ventilation openings. Install in accordance with the manufacturer's instructions.
8. Minimum distance (5 cm) around the apparatus for sufficient ventilation. The ventilation should not be impeded by covering the ventilation openings with items, such as newspapers, table-cloths, curtains, etc.
9. Do not install near any heat sources such as radiators, heat registers, stoves, or other apparatus (including amplifiers) that produce heat.
10. No naked flame sources, such as lighted candles, should be placed on the apparatus.
11. Do not defeat the safety purpose of the polarized or grounding-type plug. A polarized plug has two blades with one wider than the other. A grounding-type plug has two blades and a third grounding prong. The wide blade or the third prong are provided for your safety. If the provided plug does not fit into your outlet, consult an electrician for replacement of the obsolete outlet.
12. Protect the power cord from being walked on or pinched particularly at plugs, convenience receptacles, and the point where they exit from the apparatus.
13. Only use attachments/accessories specified by the manufacturer.
14. Use only with a cart, stand, tripod, bracket, or table specified by the manufacturer, or sold with the apparatus. When a cart is used, use caution when moving the cart/apparatus combination to avoid injury from tip-over.

15. Unplug this apparatus during lightning storms or when unused for long periods of time.
16. Refer all servicing to qualified service personnel. Servicing is required when the apparatus has been damaged in any way, such as power-supply cord or plug is damaged, liquid has been spilled or objects have fallen into the apparatus, the apparatus has been exposed to rain or moisture, does not operate normally, or has been dropped.
17. This apparatus shall not be exposed to dripping or splashing, and no object filled with liquids, such as vases or beer glasses, shall be placed on the apparatus.
18. Do not overload wall outlets and extension cords as this can result in a risk of fire or electric shock.

CAUTION

RISK OF ELECTRIC SHOCK! DO NOT OPEN!

CAUTION: TO REDUCE THE RISK OF ELECTRIC SHOCK DO NOT REMOVE COVER (OR BACK). NO USER-SERVICEABLE PARTS INSIDE. REFER SERVICING TO QUALIFIED PERSONNEL.

The lightning flash with arrowhead symbol within an equilateral triangle is intended to alert the user to the prescence of uninsulated "dangerous voltage" within the product's enclosure, that may be of significant magnitude to constitute a risk of electric shock to persons.

The exclamation point within an equilateral triangle is intended to alert the user of the prescence of important operating and maintaining (servicing) instructions in the literature accompanying the appliance.

WARNING — To reduce the risk of fire or electric shock, do not expose this apparatus to rain or moisture.

CAUTION — To prevent electric shock hazard, do not connect to mains power supply while grille is removed.

Laite on liitettävä suojakoskettimilla varustettuun pistorasiaan.

Apparatet må tilkoples jordet stikkontakt.

Apparaten skall anslutas till jordat uttag.

19. This apparatus has been designed with Class-I construction and must be connected to a mains socket outlet with a protective earthing connection (the third grounding prong).
20. The AC Mains PowerCon® connector (the appliance coupler) is used as the disconnect device. This connector shall remain readily accessible and operable.
21. The use of apparatus is in tropical and/or moderate climates.
22. **NOTE:** This equipment has been tested and found to comply with the limits for a Class A digital device, pursuant to part 15 of the FCC Rules. These limits are designed to provide reasonable protection against harmful interference when the equipment is operated in a commercial environment. This equipment generates, uses, and can radiate radio frequency energy and, if not installed and used in accordance with the instruction manual, may cause harmful interference to radio communications. Operation of this equipment in a residential area is likely to cause harmful interference in which case the user will be required to correct the interference at his own expense.
    WARNING: Operation of DRM12A in a residential environment could cause radio interference.
    CAUTION: Changes or modifications to this device not expressly approved by LOUD Audio, LLC could void the user's authority to operate the equipment under FCC rules.
23. This apparatus does not exceed the Class A/Class B (whichever is applicable) limits for radio noise emissions from digital apparatus as set out in the radio interference regulations of the Canadian Department of Communications.

ATTENTION — *Le présent appareil numérique n'émet pas de bruits radioélectriques dépassant las limites applicables aux appareils numériques de class A/de class B (selon le cas) prescrites dans le réglement sur le brouillage radioélectrique édicté par les ministere des communications du Canada.*

24. Exposure to extremely high noise levels may cause permanent hearing loss. Individuals vary considerably in susceptibility to noise-induced hearing loss, but nearly everyone will lose some hearing if exposed to sufficiently intense noise for a period of time. The U.S. Government's Occupational Safety and Health Administration (OSHA) has specified the permissible noise level exposures shown in the following chart.
    According to OSHA, any exposure in excess of these permissible limits could result in some hearing loss. To ensure against potentially dangerous exposure to high sound pressure levels, it is recommended that all persons exposed to equipment capable of producing high sound pressure levels use hearing protectors while the equipment is in operation. Ear plugs or protectors in the ear canals or over the ears must be worn when operating the equipment in order to prevent permanent hearing loss if exposure is in excess of the limits set forth here:

Duration, per day in hours	Sound Level dBA, Slow Response	Typical Example
8	90	Duo in small club
6	92	
4	95	Subway Train
3	97	
2	100	Very loud classical music
1.5	102	
1	105	Matt screaming at Troy about deadlines
0.5	110	
0.25 or less	115	Loudest parts at a rock concert

Installation should only be done by experienced, licensed professionals. Improper installation may result in damage to the equipment, injury or death.

Correct disposal of this product: This symbol indicates that this product should not be disposed of with your household waste, according to the WEEE directive (2012/19/EU) and your national law. This product should be handed over to an authorized collection site for recycling waste electrical and electronic equipment (EEE). Improper handling of this type of waste could have a possible negative impact on the environment and human health due to potentially hazardous substances that are generally associated with EEE. At the same time, your cooperation in the correct disposal of this product will contribute to the effective usage of natural resources. For more information about where you can drop off your waste equipment for recycling, please contact your local city office, waste authority, or your household waste disposal service.

Contents

Important Safety Instructions 2
Contents / Features 3
Introduction 4
Getting Started 5
Hookup Diagrams 6

DRM12A Loudspeaker: Rear Panel Features 13
1. AC In Jack 13
2. AC Thru Jack 13
3. AC Thru Circuit Breaker 13
4. XLR Input 14
5. XLR Output 14
6. LCD Display 14
7. Speaker Control Knob 14
8 and 9. Dual-Angle Pole Cup 14

DRM Control Dashboard™ 15
Main 15
Array Mode 16
Sub 16
EQ Setup 17
Delay 18
Configuration 19

Array Usage 22
Floor Mounting 22

Protection Circuitry 23
Limiting 23
Overexcursion Protection 23
Thermal Protection 23
AC Power 23
Care and Maintenance 23

Rigging 24
Room Acoustics 26

Appendix A: Service Information 27
Appendix B: Technical Information 28
DRM12A Frequency Graph 29
DRM12A Dimensions 29
DRM12A Block Diagram 30

Limited Warranty 31

Features

- High-efficiency 2000W Class-D amplifier offers ample headroom for professional applications
  - Universal power supply (100-240 VAC) with Power Factor Correction technology ensures consistent performance even with unstable AC power
  - Next-gen protection circuitry keeps transducers safe and ensures peak performance in all applications
- Advanced Impulse™ DSP module
  - Precision crossovers and transducer time-alignment deliver reference quality sound that is consistent throughout the frequency range
  - Cutting-edge FIR Filtering technology drastically reduces inherent anomalies, phase issues, and muddy midrange resulting in crystal clear sound
- DRM Control Dashboard™ features a high-contrast full color display for easy single-knob access to configuration, processing, and more
  - View current EQ and voicing mode, high-resolution metering, and more from a single overview window
  - Preset array configuration settings make setup easy with modes for 1 cabinet, 2 cabinets, 3-4 cabinets with long throw option, and independent Sub option w/ variable crossover
  - Adjustable 3-band parametric EQ allows for additional customization and tuning for your application and venue
  - Alignment Delay control for delay stacks
  - Save and recall up to 6 user presets for various applications and venues
  - Screensaver plus dimmer and contrast control
  - System lock with 4-digit passcode
- Parallel XLR Input and Output
- Premium components and cabinet design
  - Road-worthy 15mm plywood construction and internal bracing offers optimal acoustic performance with a touring-grade textured coating and powder-coated heavy gauge steel grille
  - Unique ported design provides exceptionally smooth yet punchy low frequency response while providing cool air to the internal amplifier
  - Triple 1" Titanium diaphragm compression driver array is perfectly matched to the amplifier for maximum clarity and efficiency
  - 12" high-excursion woofer offers minimal distortion with increased bass response and reliability to withstand the most demanding live applications
- Versatile configuration options
  - Dual-angle pole mount
  - Flyable with up to 4 DRM12A cabinets and 2 DRM18S subwoofers using the FB100 Fly Bar
  - 7 x M10 flypoints
  - Integrated flying hardware
  - Optional FB100 Fly Bar
- Max SPL: 135 dB
- Coverage: 20˚V x 110˚H
- 55.0 lb / 24.9 kg

Like us Follow us Watch our dang videos

Part No. SW1267 Rev. B 06/19
©2019 LOUD Audio, LLC. All Rights Reserved.

Introduction

The DRM12A 2000W 12″ Arrayable Powered Loudspeaker delivers class-leading power via an ultra-efficient Class-D amplifier with next-gen protection and Power Factor Correction technology for peak performance when you need it.

Advanced Impulse™ DSP provides acoustic correction and time-alignment via precision tuned FIR filters for crystal clear, punchy sound typically experienced only with massive touring systems. The DRM Control Dashboard™ features a high-contrast, full-color display for quick access to EQ, voicing modes and more.

A custom high-excursion 12″ woofer and three 1″ compression drivers housed in the texture coated 15mm plywood cabinet are designed for consistent performance in the most demanding applications. The DRM12A is perfect for clubs, houses of worship, rental systems and more.

While traditional point-and-shoot systems are great for venues such as coffee houses and small clubs, they do not have the output or throw to cover larger venues. In order to compensate, venues often combine loudspeakers to get more output and cover more ground. The problem is that the output of these traditional loudspeakers overlap and interfere. This interference is both constructive and destructive; it varies depending upon the listening position. For many, what they hear is less than desirable, and for no one it is exactly the same.

A line array solves this problem by effectively channeling these interferences, directing the sound where it is desired, and removing it from where it is not. Today, line arrays are the loudspeaker format of choice for high-profile tours and large installs worldwide. Unlike traditional point-and-shoot systems, line arrays excel at providing high output, long throw and directional coverage with good vertical pattern control – all in a package that is highly configurable and scalable.

But what is a line array system and how does it work? In its simplest form, a line array is a group of closely spaced loudspeakers arranged in a straight line. They are designed such that constructive interference occurs in front of the array of loudspeakers and destructive interference occurs at the top and bottom. This is the highly desirable vertical directivity for which line arrays are known.

However, one shouldn't place just any 'ol loudspeaker in a line and expect to get increased output and better pattern control. In order to get good vertical pattern control, a line array must be designed so the transducers are positioned as close together as possible. More specifically, the separation between the transducers must be less than the wavelengths emitted by them. This is easy to achieve for lower frequencies with long wavelengths (e.g. 1 kHz is equal to 13.56 inches), but much more difficult with higher frequencies (e.g. 10 kHz is equal to only 1.32 inches). Line arrays achieve this tight spacing by using multiple drivers and more complex mechanical designs. Even then, it isn't practical to place drivers only an inch apart. Therefore, additional acoustical magic is employed in the horn design to flatten the output of the high frequency wave fronts so they combine constructively. The result is high output and even coverage.

Well, if line arrays are so awesome, why even use traditional loudspeakers any more? Simply because line arrays aren't perfect for all situations. A line array is best-suited to applications where broad horizontal coverage is desired throughout a given space, combined with long-throw and higher output. Small venues don't always need the added size and output of a line array, and many meeting rooms, halls and restaurants are better served by distributed systems comprised of many small point-and-shoot loudspeakers. Plus, the added cost for the more complex acoustical and mechanical design of a line array puts them out of reach of many customers...until now. The Mackie DRM12A brings this technology to you at a price point never seen before.

The DRM12A is a constant curvature line array. This means that the physical angle of the loudspeaker matches the acoustical angle. There is only one way to rig together multiple DRM12As, so it's easy to use. As more units are added, the array provides additional vertical coverage (plus more vertical directivity at lower frequencies) and, of course, it's louder. DRM12A's integrated rigging makes it perfect for use in large permanent installs, tours and festivals where the system is flown, or as a high-output pole-mounted portable PA. The DRM12A is as versatile as your shows and will scale to fit your needs like no other system anywhere else.

There is a lot to digest, so grab a coffee, cozy up into your favorite chair and learn all there is to know about your new DRM12A system.

THE EVER-IMPORTANT INSTALLATION WARNING

WARNING: DRM12A loudspeakers are a wonderful tool when utilized in installed and portable PA systems. However, improper installation may result in damage to the equipment, injury or even death. Therefore, installation should only be done by experienced, licensed professionals to ensure that the loudspeakers are installed in a stable and secure way in order to avoid any conditions that may be dangerous for persons or structures.

How to Use This Manual:

After this introduction, a getting started guide will help you get things set up fast. The hookup diagrams show some typical DRM12A loudspeaker setups.

This icon marks information that is critically important or unique! For your own good, read and remember them...it is a good idea to pay special attention to these areas in the Owner's Manual marked with the "VERY IMPORTANT" hand icon.

There's an illustration of a microscope, so, of course, you're going to get more detailed information when you see this little guy. There are explanations of features and practical tips listed here.

It's a good idea to pay attention to text displayed next to a note icon, as this icon draws attention to certain features and functions relating to the usage of the DRM12A.

Getting Started

The following steps will help you set up the DRM12A quickly.

1. Make all initial connections with the power switches OFF on all equipment. Make sure the master volume, level and gain controls are all the way down.

2. If using a subwoofer, connect the outputs from the mixing console (or other signal source) to the inputs on the rear panel of the subwoofer, then connect the high pass outputs from the subwoofer to the inputs of the DRM12A loudspeakers. Make sure the subwoofer's gain knob is set to "U" (unity gain).

3. If not using a subwoofer, connect the outputs from the mixing console (or other signal source) to the inputs on the rear panel of the DRM12A loudspeakers.

4. Push the line cord securely into the subwoofer's IEC connectors and plug the other ends into grounded AC outlets. The subwoofer may accept the appropriate voltage as indicated near the IEC connector.

5. Turn the mixer (or other signal source) on.

6. Turn the subwoofer on.

7. Push the AC mains cord securely into the DRM12A loudspeaker's AC In Neutrik PowerCon® jack, then twist 1/4 turn clockwise to lock. Plug the other end into the AC mains supply receptacle.

8. Set the gain on the DRM12A (and all other DRM boxes) to unity. Volume will be controlled via the mixer.

9. Start the signal source and raise the mixer's main L/R fader up to a comfortably loud listening level.

Things to Remember:

- Never listen to loud music for prolonged periods. Please see the Safety Instructions on page 2 for information on hearing protection.
- As a general guide, the mixer (or other signal source should be turned on first, subwoofer next, and DRM12A loudspeakers last. As such, the DRM12A loudspeakers should also be turned off first, followed by the subwoofer, then the mixer. This will reduce the possibility of any turn-on or turn-off thumps and other noises generated by any upstream equipment from coming out of the speakers.
- Save the shipping boxes and packing materials! You may need them someday. Besides, the cats will love playing in them and jumping out at you unexpectedly. Remember to pretend like you are surprised!
- Save your sales receipt in a safe place.

Please write the serial numbers here for future reference (i.e., insurance claims, tech support, return authorization, make dad proud, etc.)

Purchased at:

Date of purchase:

Hookup Diagrams

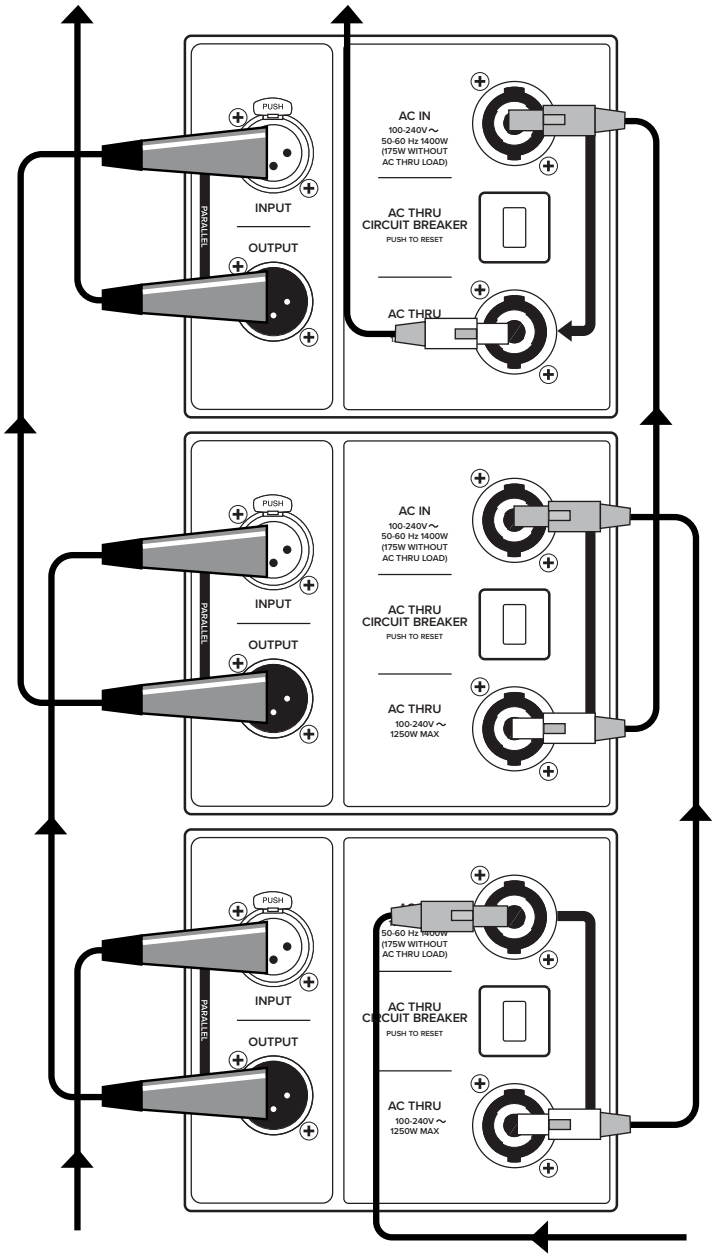

One convenient feature of the Mackie DRM12A loudspeaker system is the ability to connect multiple loudspeakers together easily, as shown in the illustration above.

If only one DRM12A is required, connect the mixer output to the DRM12A's input using a balanced XLR cable. The DRM12A is powered via the supplied Neutrik PowerCon® cable connected to the AC IN jack. See the following page for details on this type of setup.

If multiple DRM12As will be connected, start with the instructions as listed above. Next, connect the first DRM12A's thru jack to the second DRM12A's input jack using a balanced XLR cable. A short 1-2 foot cable is all that is necessary. Hook up the supplied loop Neutrik PowerCon® cable from the first DRM12A's AC Thru jack to the second DRM12A's AC In jack. A maximum of four DRM12As may be daisy-chained together in this fashion from a single 20A source.

See pages 9-12 for systems utilizing multiple DRM12As in various setups. See page 13 for more information regarding powering the Mackie DRM12A loudspeaker.

Daisy-Chaining Multiple DRM12A Loudspeakers

Hookup Diagrams continued...

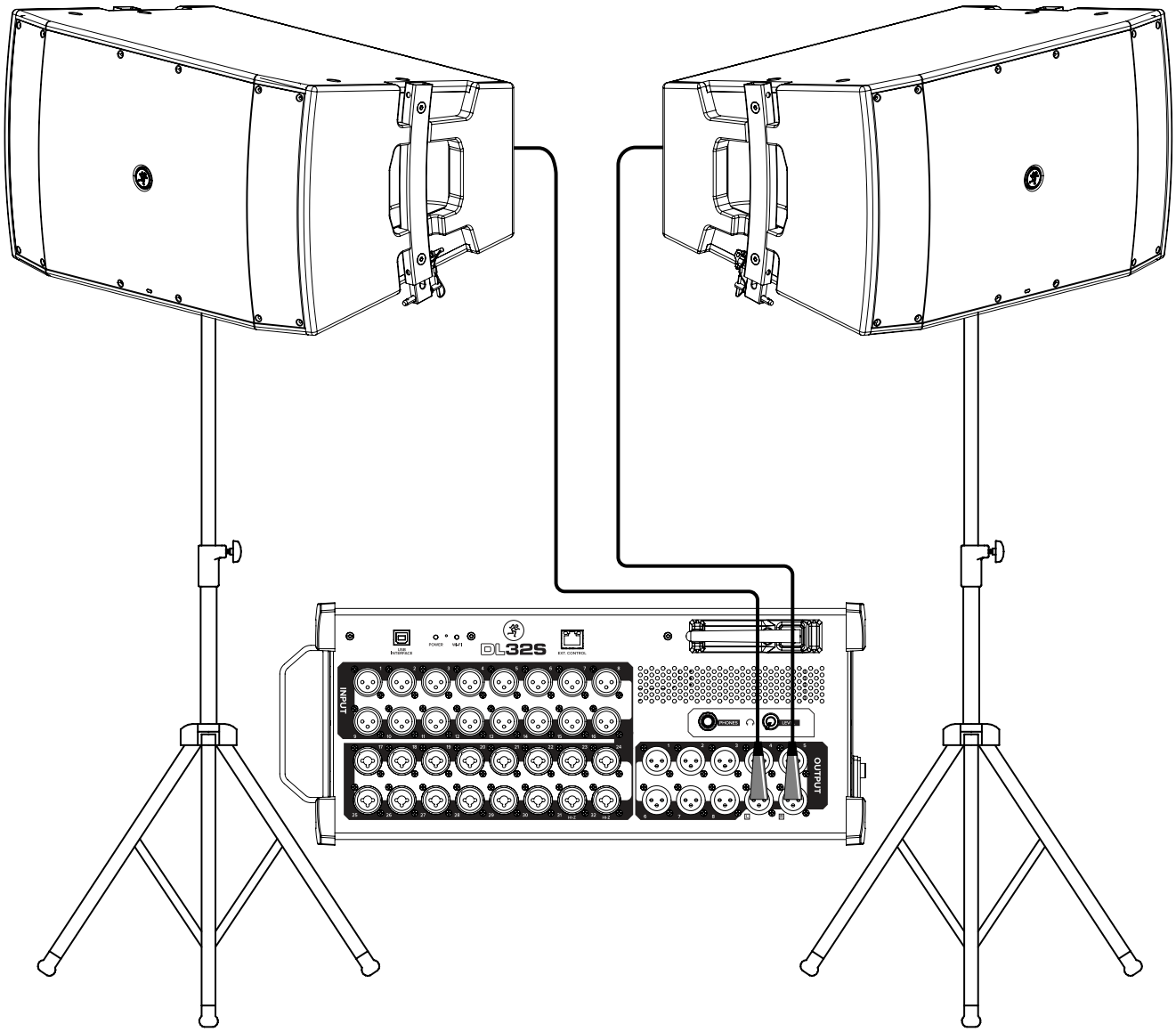

This type of setup will typically be found at small indoor or outdoor gigs, weddings, parades, rental systems, and/or used as vocal reinforcement. Another possibility is to place DRM12As on the stage as front or side fills. This helps provide sound to the fans near the stage where they may not be adequately covered by the PA.

The outputs from a mixer feed the inputs of a pair of DRM12A loudspeakers. Since only two DRM12As are used, the array mode should be set to dual on both speakers and the subwoofer HPF set to off.

2-Way System

Hookup Diagrams continued...

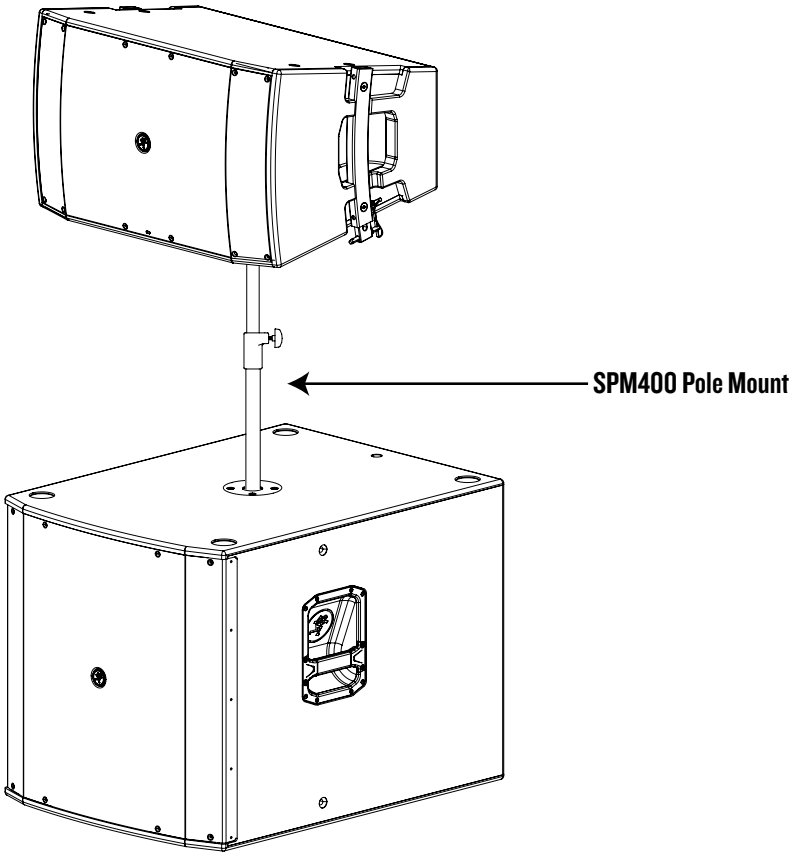

This type of setup will typically be found at small indoor or outdoor gigs, festivals, weddings, or parades where a high output PA with wide coverage and throw is necessary. This is a great setup for local DIY bands, too.

In this example, the left output from a mixer feeds the ch. 1 input of a Mackie DRM18S powered subwoofer. The ch. 1 high-pass output of the subwoofer feeds the input of a Mackie DRM12A powered loudspeaker. The DRM12As reproduce the mid-to-high frequencies in mono, and the subs provide the low frequencies in mono. Here the array mode should be set to single position and the subwoofer HPF to DRM Sub. Or set it to Var if not using the DRM18S.

It is possible to reproduce this exact same hookup in stereo for even wider (and louder) dispersion. Simply utilize the left and right main outputs from the mixer to feed the main inputs of each subwoofer and mirror the rest of the system as identified above. Heck, you could even add an additional pair DRM12A loudspeakers for greater coverage. Lots of possibilities!

Another important aspect to keep in mind is the rigging setup of loudspeakers. In this diagram, the DRM12As are pole-mounted on a subwoofer, utilizing an SPM400 adjustable pole. Refer to page 22 to view a table listing other configuration possibilities and pages 24-26 for more information about rigging.

Note that the DRM12As AC power may be linked via the AC Thru. Refer to page 6 for details on daisy-chaining AC power.

*If using a DRM18S subwoofer, set the crossover to DRM Top to match the DRM12A.

Single pole-mounted DRM12A arrayable loudspeaker with single DRM18S subwoofer

Hookup Diagrams continued...

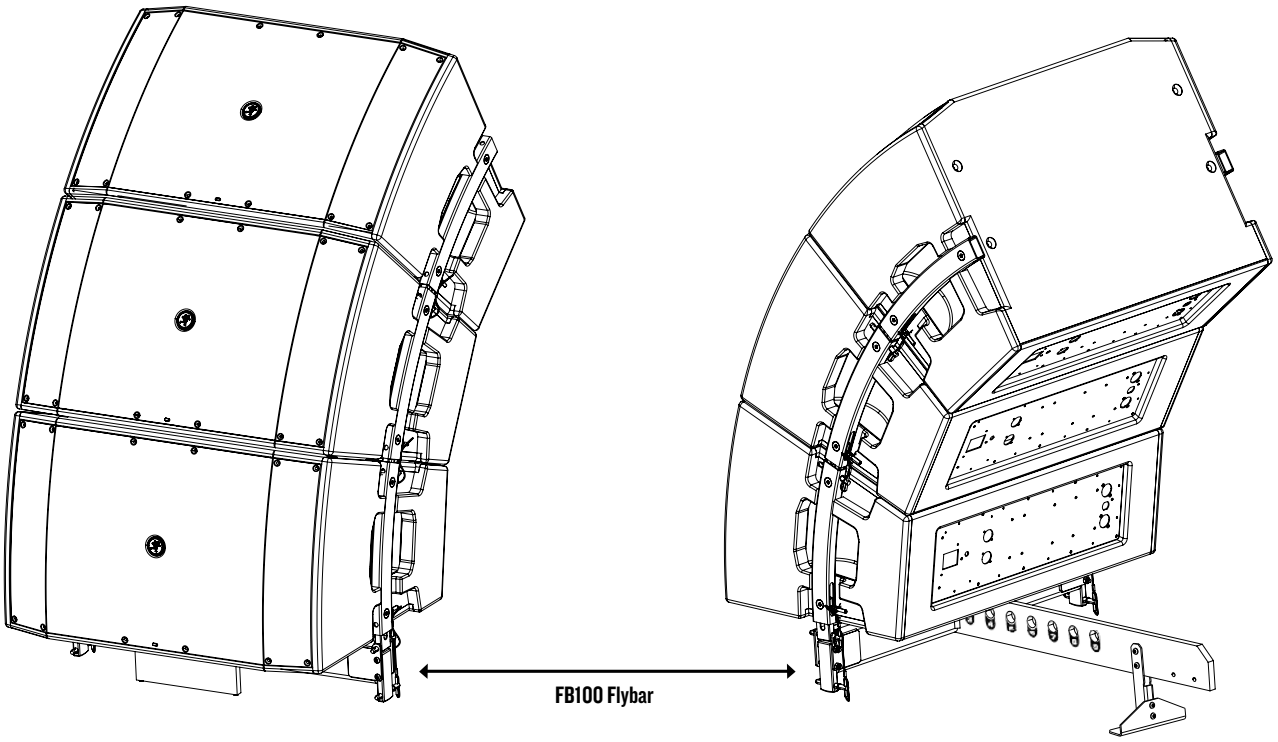

This is the perfect setup for any venue where the audience is level with and above the stage. For example, a bowl, a shed or a gym with bleachers.

The left output from a mixer feeds the input of a Mackie DRM12A powered loudspeaker. The output of that Mackie DRM12A feeds the input of the next Mackie DRM12A. This daisy-chained array is repeated once more to complete the tri-fecta.

Since three units are used, the array mode should be set to either 3-4 or 3-4 long and the subwoofer HPF set to off. See page 16 for more information about the array mode and the choices available.

It is possible to reproduce this exact same hookup in stereo. Simply utilize the left and right main outputs from the mixer to feed the main inputs of the first DRM12A on each side of the stage and mirror the rest of the system as described above.

Another important aspect to keep in mind is the rigging setup of loudspeakers. In this diagram, the DRM12As are ground stacked on the FB100 Flybar and the kickstand is included for additional support. This may be a full-range system (as illustrated above) or add some DRM18S subwoofers to the system for extra thump. You could even mount the DRM12As on top of the sub as shown on the next page. Refer to page 22 to view a table listing other configuration possibilities and pages 24-26 for more information about rigging.

Note that the DRM12As AC power may be linked via the AC Thru. Refer to page 6 for details on daisy-chaining AC power.

Ground-stacked with FB100 Flybar Accessory

Hookup Diagrams continued...

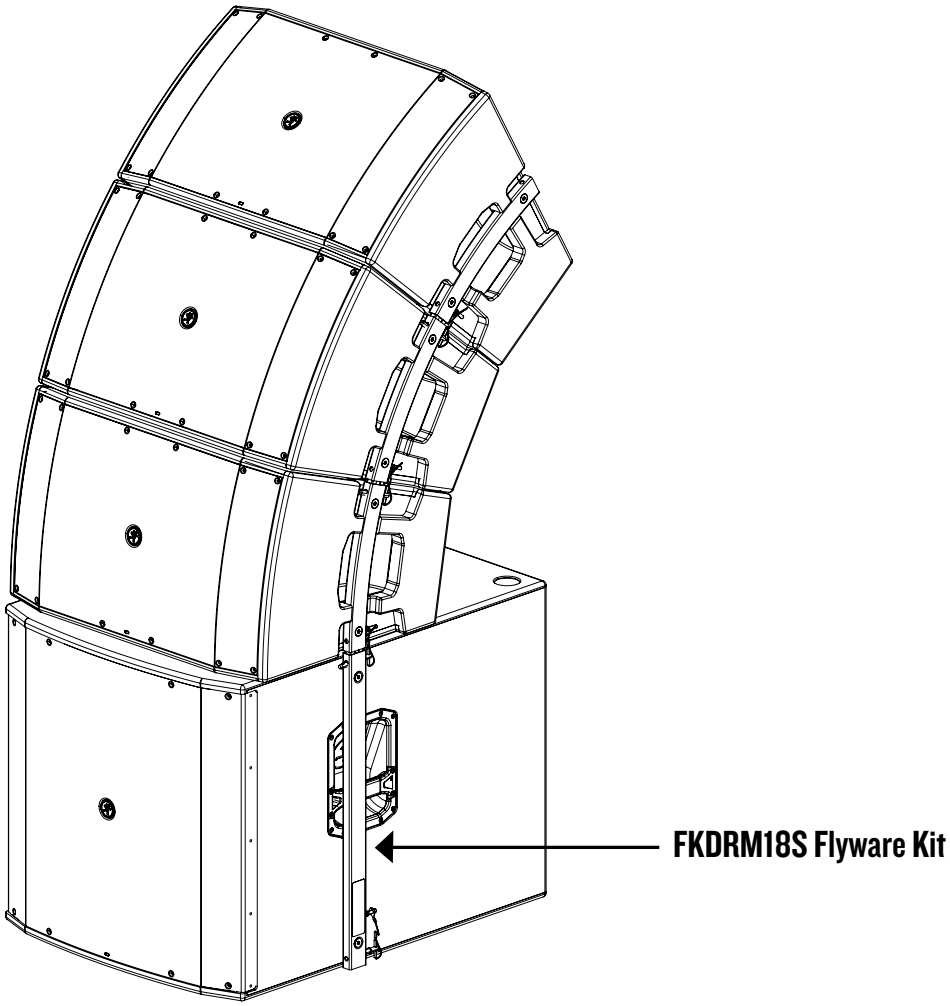

Similar to the hook-up diagram on the previous page, this is the perfect setup for any venue where the audience is level with and sloping upward from the stage and PA. For example, a bowl, a shed or a gym with bleachers. However, a DRM18S subwoofer is introduced to this setup, adding a lot more thump to the system.

The left output from a mixer feeds the ch. 1 input of a Mackie DRM18S powered subwoofer. The ch. 1 high-pass output of the subwoofer feeds the input of a Mackie DRM12A powered loudspeaker. The output of that Mackie DRM12A powered loudspeaker feeds the input of the next Mackie DRM12A powered loudspeaker. The DRM12As reproduce the mid-to-high frequencies in mono, and the sub provides the low frequencies in mono. Since three DRM12As are used, the array mode should be set to the 3-4 or 3-4 long position and the subwoofer HPF to DRM Sub. Or set it to Var if not using the DRM18S.

It is possible to reproduce this exact same hookup in stereo. Simply utilize the left and right main outputs from the mixer to feed the ch. 1 input of each DRM18S and mirror the rest of the system as described above.

Another important aspect to keep in mind is the rigging setup of loudspeakers. In this diagram, the DRM12As are ground stacked on a DRM18S subwoofer utilizing the FKDRM18S flyware kit. This system may also be flown utilizing the FB100 Flybar, with the DRM18S powered subwoofer on top. See the next two pages for flying DRM12As, page 22 to view a table listing other configuration possibilities and pages 24-26 for more information about rigging.

Note that the DRM12A's AC power may be linked via the AC Thru. Refer to page 6 for details on daisy-chaining AC power.

Three ground-stacked DRM12A arrayable loudspeakers with single DRM18S

Hookup Diagrams continued...

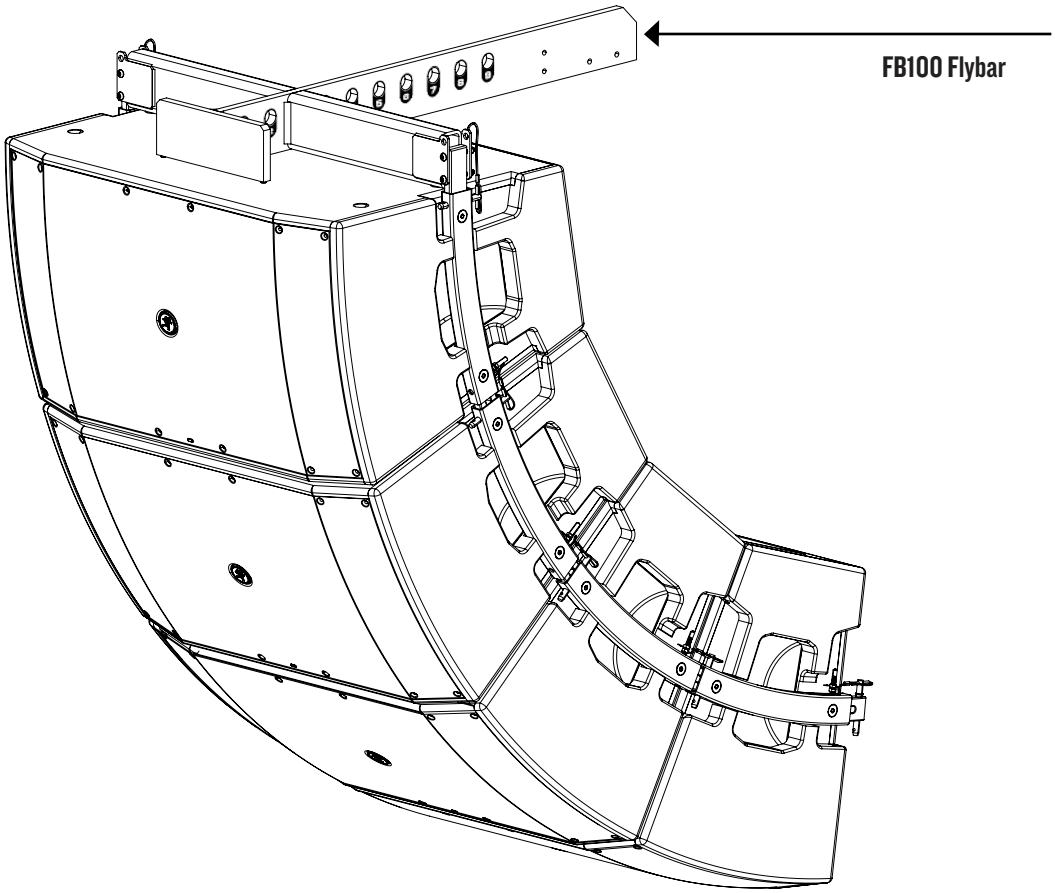

This setup is perfect for installs, touring systems, festivals and/or small stages...any venue requiring high output with a 75–100 foot throw.

The left output from a mixer feeds the input of the top DRM12A. The output of that DRM12A feeds the input of the next DRM12A. This daisy-chained array is repeated twice more to complete the quad DRM12A setup. Here, the array mode should be set to the 3-4 position because four DRM12As are in the array. Alternatively, the top one or two DRM12As may be set to the 3-4 long position if they have to cover an audience at a substantially further distance than the bottom boxes. See pages 16 and 22 for more information.

It is possible to reproduce this exact same hookup in stereo. Simply utilize the left and right main outputs from the mixer to feed the inputs of the top boxes and mirror the rest of the system as identified above.

Another important aspect to keep in mind is the rigging setup of loudspeakers. In this diagram, the DRM12As are flown utilizing an FB100 Flybar. In this array, subs may be on the stage to add more thump to the overall sound system. Be sure to visit the next page if you are interested in flying subs. Refer to page 22 to view a table listing other configuration possibilities and pages 24-26 for more information about rigging (and eyebolts).

Note that the DRM12As AC power may be linked via the AC Thru. Refer to page 6 for details on daisy-chaining AC power.

Last, but not least, a VERY important warning: when the FB100 Flybar is used to suspend a system, it cannot retain a 10:1 design factor at certain pick points for the largest systems. Please refer to the array usage and rigging sections, starting on page 24.

Four flown DRM12A arrayable loudspeakers

Hookup Diagrams continued...

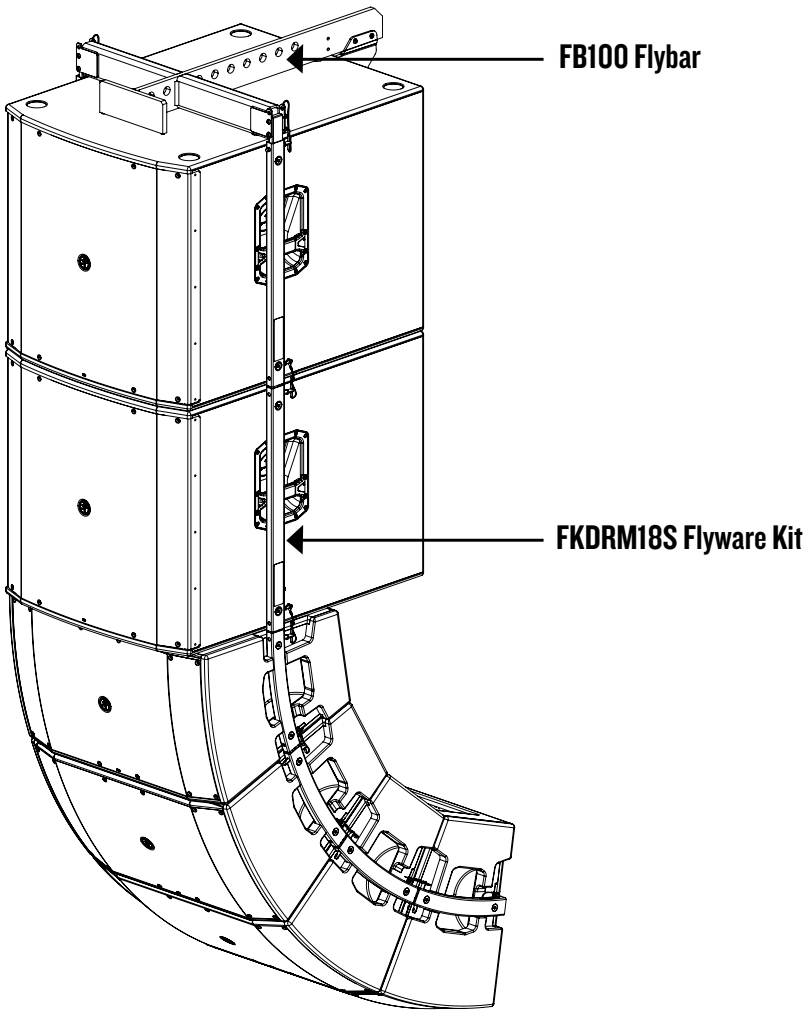

Similar to the hook-up diagram on the previous page, this setup is perfect for installs, touring systems, festivals and/or small stages...any venue requiring a 75–100 foot throw. However, two subwoofers are introduced to this setup, providing even low frequency coverage for the flown subs.

As in the previous hook-up diagram, the array mode should be set to the 3-4 position because four DRM12As are in the array. Again, the top one or two DRM12As may be set to the 3-4 long position if they have to cover an audience at a substantially further distance than the bottom boxes. Additionally, the subwoofer HPF should be set to DRM Sub and the DRM sub's crossover to DRM Top. See pages 16 and 22 for more information.

It is possible to reproduce this exact same hookup in stereo. Simply utilize the left and right main outputs from the mixer to feed the main inputs of the top subwoofers to mirror the rest of the system as identified above.

Another important aspect to keep in mind is the rigging setup of loudspeakers. In this diagram, the DRM12As and DRM18S subwoofers are flown utilizing an FB100 Flybar. Note that each subwoofer requires its own FKDRM18S rigging kit, as well. Refer to page 22 to view a table listing other configuration possibilities and pages 24-26 for more information about rigging (and eyebolts).

Note that the DRM12As AC power may be linked via the AC Thru. Refer to page 6 for details on daisy-chaining AC power.

Last, but not least, a VERY important warning: when the FB100 Flybar is used to suspend a system, it can not retain a 10:1 design factor at certain pick points for the largest systems. Please refer to the array usage and rigging sections, starting on page 24.

Two flown DRM18S subwoofers with four DRM12A arrayable loudspeakers

DRM12A Loudspeaker: Rear Panel Features

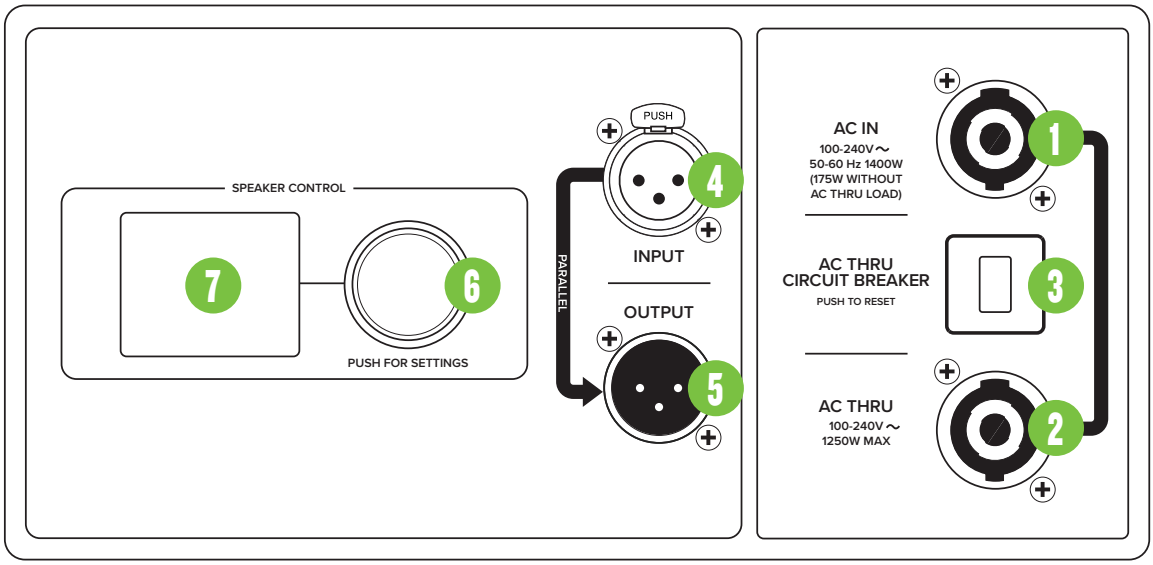

1. AC In Jack

There is no power switch on the DRM12A. When connected to the AC mains, the loudspeaker will be fully operational.

Connect the supplied AC mains cord to the AC IN Neutrik PowerCon® jack on the rear panel of the DRM12A. The PowerCon® system utilizes a locking connector. To lock, twist 1/4 turn clockwise after fully inserting it into the AC IN receptacle. Then connect the other end of the cable to the AC mains supply receptacle.

VERY IMPORTANT Ensure that the AC mains voltage matches the voltage rating listed on the DRM12A below the AC IN connector.

VERY IMPORTANT Ensure that the AC power supply has a properly grounded safety ground. Failure to follow this warning could cause equipment damage, serious personal injury, or even death.

VERY IMPORTANT The supplied AC in plug may not be appropriate for local AC mains receptacles. If not, have a qualified electrician remove the existing AC mains plug and install a plug appropriate for the AC mains supply receptacle and following all local codes.

VERY IMPORTANT If an extension cord is used for the AC mains, use only a cord with the appropriate wire size and current rating for the required current draw and extension cord length.

VERY IMPORTANT As a general guide, powered speakers should be powered up last, after the mixer and other sources. They should also be the first things turned off. This will reduce the possibility of any turn-on, or turn-off thumps in the loudspeakers.

2. AC Thru Jack

The Neutrik PowerCon® AC IN and AC THRU connectors are wired in parallel to provide an AC IN inlet and outlet on each DRM12A.

An AC Thru cable is included with the DRM12A. The white connector mates with the AC Thru outlet, while the blue connector mates with the AC In inlet. Therefore, to loop the AC In from enclosure to enclosure, connect the included AC In jumper cable from the AC Thru output of one DRM12A to the AC In input of the next DRM12A as shown on page 6. Up to four DRM12As may be looped in this fashion from a single 20A service.

VERY IMPORTANT The maximum, continuous load from the first DRM12A Loop output must not exceed 6A at 100–120V and 3A at 220–240V.

3. AC Thru Circuit Breaker

The AC Thru circuit breaker protects the AC Thru outlet. If the continuous load connected to the AC Thru outlet exceeds the rated load, the circuit breaker will trip. For this situation, reduce the connected load and then manually reset the circuit breaker.

VERY IMPORTANT As is the case with the AC Thru, the maximum, continuous load from the first DRM12A Thru output must not exceed 6A at 100–120V and 3A at 220–240V.

VERY IMPORTANT Yes, there are quite a few 'Very Important' hand symbol remarks on this page. Please review them carefully, because they are indeed 'Very Important'!

DRM12A Loudspeaker: Rear Panel Features continued...

4. XLR Input

The input channel may accept a balanced mic signal using an XLR connector. It is wired as follows, according to standards specified by the AES (Audio Engineering Society).

Balanced XLR Input Connector

Pin 1 = Shield (ground)
Pin 2 = Positive (+ or hot)
Pin 3 = Negative (– or cold)

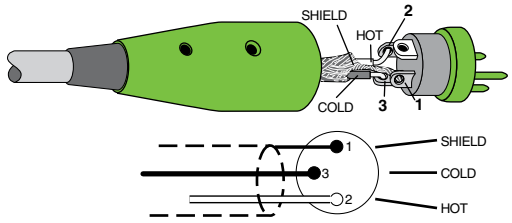

NEVER connect the output of an amplifier directly to the DRM12A's input jack. This could damage the input circuitry!

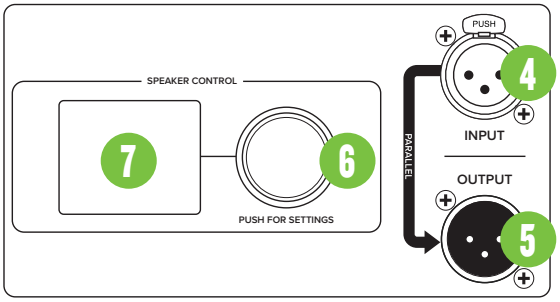

5. XLR Output

This is a male XLR-type connector that produces exactly the same signal that is connected to the input jack located above it. Use it to daisy-chain several DRM12A loudspeakers together off the same signal source.

It is wired as follows, according to standards specified by the AES (Audio Engineering Society):

Balanced XLR Output Connector

Pin 1 – Shield (ground)
Pin 2 – Positive (+ or hot)
Pin 3 – Negative (– or cold)

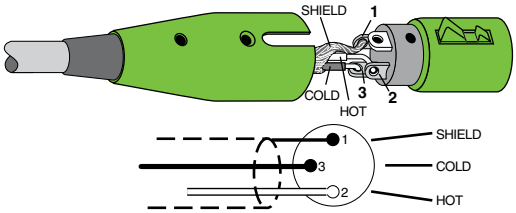

See page 6 to learn more about daisy-chaining DRM12A loudspeakers.

6. LCD Display

This modern, high-resolution, all-color TFT LCD Display is one of the most vital features of the DRM12A loudspeaker. It displays loudspeaker information including (but not limited to) levels, array mode, high-pass filter, EQ and delay settings, lock / unlock status and other parameters.

The brightness is controllable, but an overall screen brightness is required for certain aspects of the set-up options.

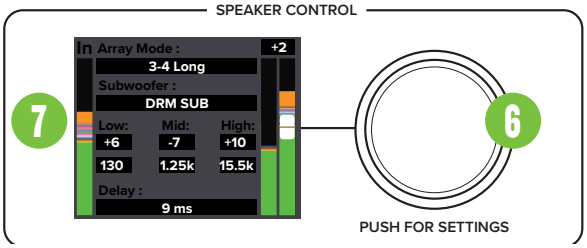

7. Speaker Control Knob

This push-button rotary encoder allows you to access functions such as master level control and metering, array mode, subwoofer HPF, EQ and delay settings, product information and much more!

8 and 9. Dual-Angle Pole Cup

The rear pole cup [8] is for use with a single unit on a pole. It orients the DRM12A downward 10° for output parallel to the floor.

The front pole cup [9] serves two purposes. It angles the DRM12A downward 30° to aim at the audience below the loudspeaker. It may also be utilized for use with two DRM12As arrayed on one pole.

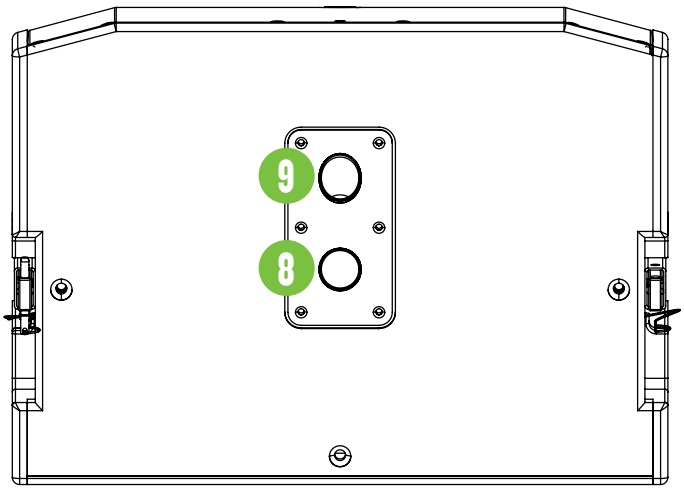

DRM Control Dashboard™

The following list provides the high level navigation items, in order, on the user interface and their subsequent user controlled parameters.

The default screen is the main view, as seen below:

Main – This displays the I/O metering, array mode, subwoofer HPF selection, EQ and delay settings and more. The only thing that may be changed here is the main output level.

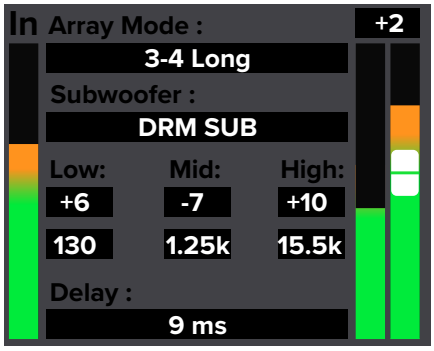

Menu – The menu provides icon selectors for all user-controllable functions with most of these containing an array of sub-menus.

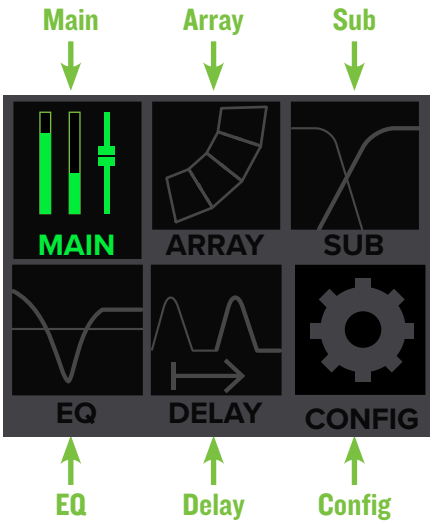

We will go through each, how to get there and how to change settings.

After a selection is made, the LCD screen will revert back to the Main screen after 5 seconds of (speaker control) inactivity. You yourself may continue to be as active (or inactive)as you want.

Rotate the speaker control knob to navigate between the selections and push the button to open and edit the parameters.

Main

Push the speaker control knob to open the menu. From here, rotate the speaker control knob to scroll between the six selections. The current selection will illuminate in a can't-miss DayGlo green.

The first choice here is main. Push the button when main is illuminated to open it.

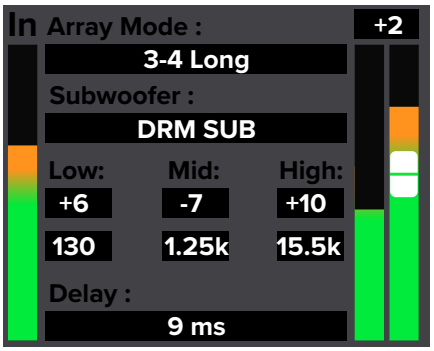

As you can see here, this is the same exact look as the default main screen. Like the default main screen, here you can only update the main output level. Do so by turning the speaker control knob clockwise (louder) and counter-clockwise (quieter). Once the level you desire has been dialed in, press the speaker control knob again to return to the main screen.

Let's expand on the meters for a moment. The peak holder meter peaks at +16 dBu and a 4:1 compressor engages at approximately +8 dBu. This means that the loudspeaker is compressing when the peak/hold indicator is hitting the top of the meter scale. It also signifies that you are nearing the end of available headroom. As you continue to raise the volume, you're continuing to compress the signal, as well. This is reflected in compression of the metering – which will remain at or near the top of the meter strip – and reflected in the acoustic output.

The main level control range is as follows:

- Main Output: –10 (off) to unity (max)

Array Mode

This array mode allows the DRM12A to be tailored for any sound application. It's voiced depending on the number of DRM12As in use and the user-EQ settings.

As more DRM12As are arrayed together, the boxes couple and the low frequency energy increases.

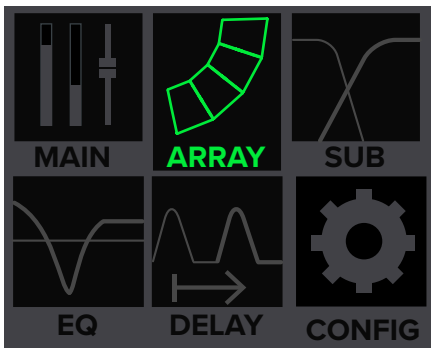

Rotate the speaker control knob until the array mode you desire – Single, Dual, 3-4 or 3-4 Long – is illuminated, then push to select it. As seen below, we're going with 3-4.

• Single – Choose this if a single Mackie DRM12A loudspeaker (or one per side) will be used in the setup.

• Dual – Choose this if two Mackie DRM12A loudspeakers (or two per side) will be used in the setup.

• 3 – 4 – Choose this if three or four Mackie DRM12A loudspeakers will be used in the setup.

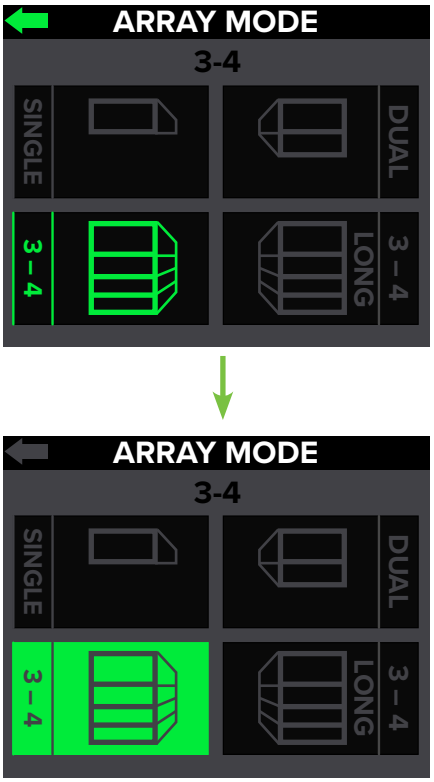

• 3 – 4 Long – When configuring an array with three or four DRM12A loudspeakers per side, set the array mode on the top one or two boxes to 3-4 Long. Longthrow mode is calculated to account for up to 100 feet of air loss compensation.

The top box in a flown three or four box array typically has to reach an audience that is much further away than those covered by the bottom boxes. Since high frequency energy decreases as it travels, audience members positioned towards the rear of the venue will commonly perceive less high end than those located closer. 3-4 Long compensates for this by boosting the top end so the audio sounds smooth and even when it reaches those audience members.

Therefore, set the array mode to 3-4 Long on the top one or two boxes in the array. In doing so, the high frequency energy will reach the back of the venue, as intended. Setting the bottom boxes to 3-4 (not long) will cover the audience converged more towards the front.

Be sure to listen for consistency by using your ears while walking around the room.

There's also a left-facing arrow. Illuminating and selecting this simply returns you to the menu.

Sub

You're our hero, so we have a built-in submarine sandwich maker! After pushing the speaker control knob in to select sub, you will be presented with a multitude of choices, including:

• Cold Cut

• Roast Beef

• Philly Cheesesteak

• BLT

• Meatball

• Veggie

• Tuna

• Design Your Own

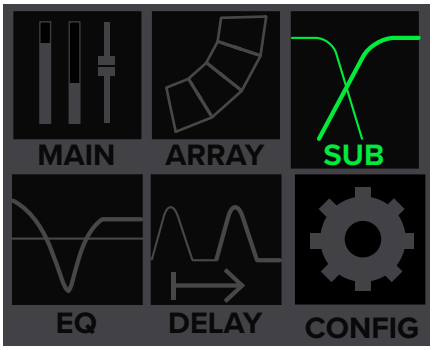

Now that you're hungry, let's take a look at what opening the sub menu really displays:

• Off – Choose this if there is no subwoofer connected to the system. Here you are using a DRM12A loudspeaker only.

• DRM Sub – Choose this if a Mackie DRM18S subwoofer is connected to the system. The crossover point is set to 90 Hz to work in perfect harmony with the Mackie DRM18S Sub. This is what we hope you choose, thank you for your support!

• Var – Choose this if a non-Mackie DRM18S subwoofer is connected to the system. Here you can select the subwoofer's HPF, ranging from 40 Hz – 160 Hz.

Rotate the speaker control knob until the sub HPF you desire is illuminated, then push to select it. If var is selected (as seen below), the frequency is illuminated and may be changed by rotating the speaker control knob clockwise (raise the frequency) and counter-clockwise (lower the frequency).

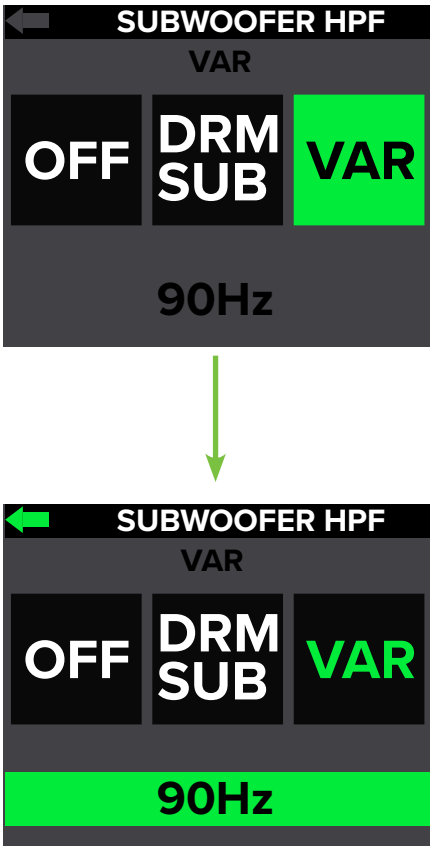

In addition to the three sub modes, there's a fourth and final selection: the left-facing arrow. Illuminating and selecting this simply returns you to the menu.

EQ Setup

On to the bottom row now! The first one listed is EQ, and, as you might expect, this is where to adjust the output EQ.

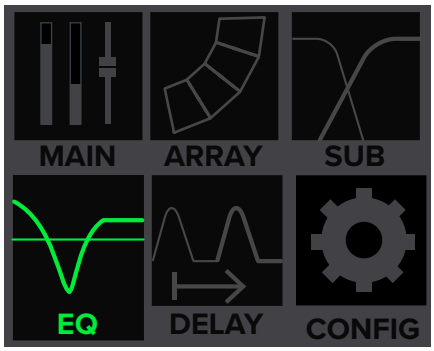

The DRM12A has 3-band EQ with shelving hi, peaking mid and shelving low. Shelving means that the circuitry boosts or cuts all frequencies past the specified frequency. Peaking means that certain frequencies form a "hill" around the center frequency.

With too much EQ, you can really upset things. We've designed a lot of boost and cut into the equalizer circuit because we know that everyone will occasionally need that. But if you max the EQ, you'll get mix mush.

In order to change the EQ, first push the speaker control knob when the EQ icon is illuminated (see image above). This opens the EQ view:

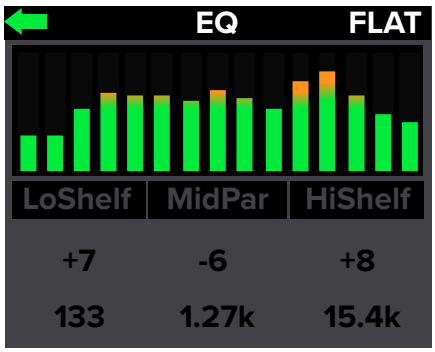

From here, rotate the speaker control knob until the parameter you want to change is illuminated. Push the speaker control knob in to select the parameter followed by rotating the speaker control knob clockwise (raise the gain / frequency) and counter-clockwise (lower the gain / frequency).

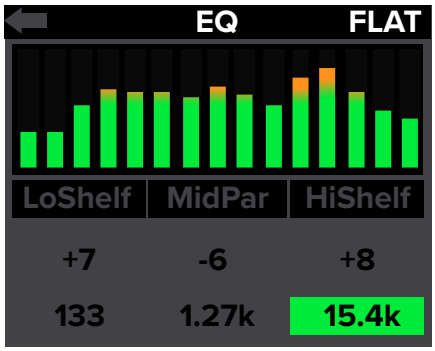

The EQ ranges are as follows:

- Low: ±12 dB @ 20 Hz – 200 Hz
- Mid: ±12 dB @ 200 Hz – 2.00 kHz
- High: ±12 dB @ 2.00 kHz – 20.0 kHz

In addition to these EQ choices, there are two more selections. First, when flat is illuminated and selected (by pushing in the speaker control knob), the EQ resets to flat:

- Low: ±0 dB (unity) @ 100 Hz
- Mid: ±0 dB (unity) @ 1.00 kHz
- High: ±0 dB (unity) @ 10.0 kHz

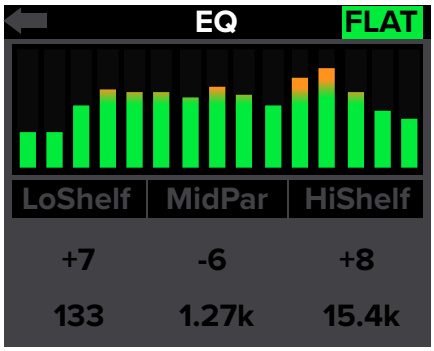

Like the previous sub-menus, the EQ also has a left-facing arrow. Illuminating and selecting this simply returns you to the menu.

Let's talk about those meters now. That is what's called a "Real-Time Analyzer" [RTA for short]. It measures and displays the sound of the corresponding output – amplitude versus frequency components of a continuous signal – via DSP.

An RTA allow you to see what you hear so you may easily locate and eliminate feedback and other anomalies while seeing the EQ changes in real time.

Many audio signals are highly dynamic: music, speech and even environmental noise contain significant changes in spectral content as a function of time. With a digital mixer, musicians and sound engineers can save time setting up at shows by recalling previous settings. The DRM12A's RTA fits right in with that, literally displaying frequencies, shortening the time it takes to tune the main loudspeakers or stage monitors during setup in a new room.

There are 15 bands on all DRM12A RTAs.

Delay

This parameter controls the delay. In other words, you are going to want to time-align the speakers throughout the venue so the sound hits everywhere simultaneously. This is the place.

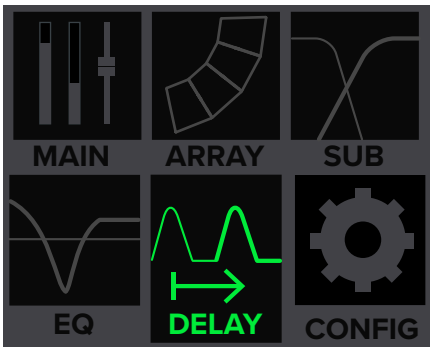

The delay time ranges from a low of 0.0 ms (ft, m) to a maximum of 100 ms (112.5 ft, 34.2 m).

In order to change the delay, first push the speaker control knob when the delay icon is illuminated (see image above). This opens the delay view.

From here, rotate the speaker control knob clockwise until the ms parameter is highlighted.

This is the only parameter that can be changed here; the ft and m delay time ranges update automatically dependent on where ms is set.

Push the speaker control knob in to select the ms parameter followed by rotating the speaker control knob clockwise (raise the delay time) and counter-clockwise (lower the delay time).

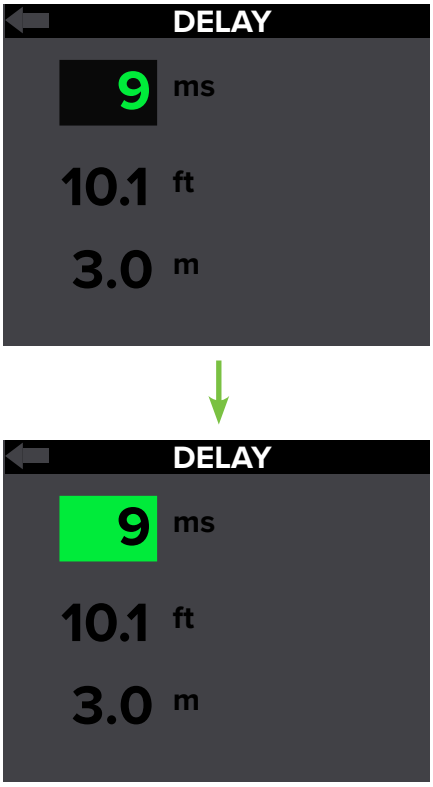

Like the previous sub-menus, the delay also has a left-facing arrow. Illuminating and selecting this simply returns you to the menu.

Configuration

This is where to recall / store settings to memory, lock access to the settings, select LED screen brightness and more.

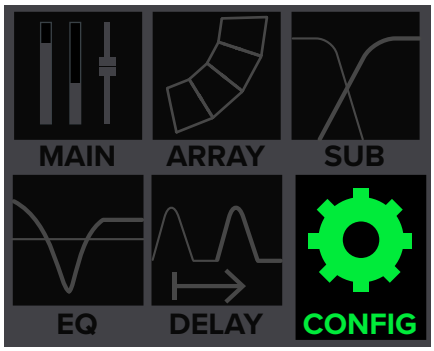

This is similar to what you will see after first entering the configuration screen. The backlight and front LED settings will be illuminated.

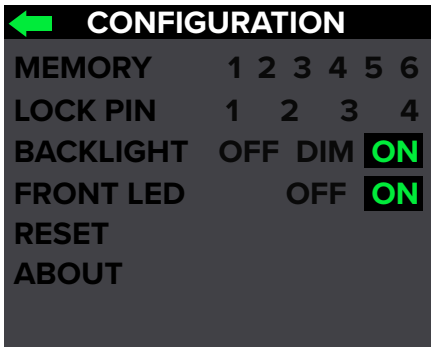

To change a setting, just rotate the speaker control knob until the configuration you desire to change is illuminated, then push to select it.

These are the choices from top to bottom:

Memory – When memory is selected, settings may be saved to memory and recalled at a later time. No more having to reset levels, EQ, voicing, etc. upon every power-up.

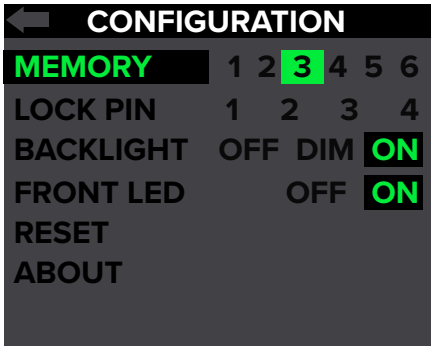

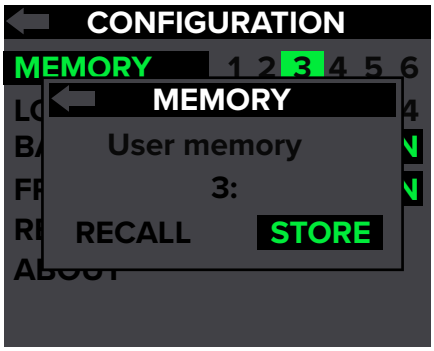

There are six user memory snapshots which should be more than enough.

Store – Tap this to store the current settings to the corresponding memory snapshot.

Please be aware that the new settings will replace the currently saved settings.

Recall – Tap this to recall the settings of the selected memory snapshot.

Illuminating and selecting the left-facing arrow returns you to the previous screen.

Lock Pin – This is where to lock and unlock the interface with a secret 4-digit numeric password.

Rotate the speaker control knob until lock pin is illuminated, then push in to enter lock mode. From here, rotate the speaker control knob until the first number you desire is illuminated and press to select. Follow the same procedure for the next three numbers.

As seen below, we decided to go with 1-2-3-4 because that's (a "5" shy of) the same code that was used on Spaceballs. A confirmation dialog helps prevent accidents. No further changes may be made until the control access is unlocked.

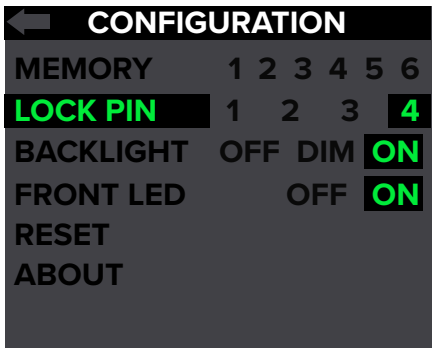

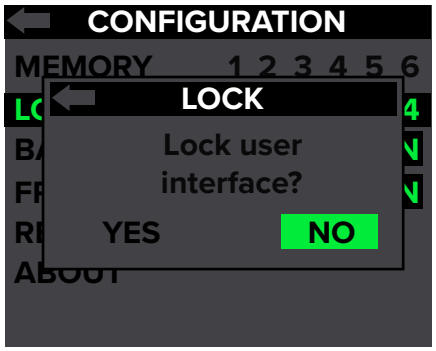

Unlocking – If you try to make any changes or select anything, you will be asked to enter the pin. Here you will need to re-enter the 4-digit code and push the speaker control knob to unlock.

Secret Squirrel Unlock – If you – or worse, someone else! – set up a 4-digit lock code and you don't know the passcode, there is a quick fix. Simply press and hold down the speaker control knob down for a few seconds and it will automatically unlock.

Illuminating and selecting the left-facing arrow returns you to the previous screen.

Backlight – The third configuration setting that may be changed is the brightness – or lack thereof – of the LCD screen.

There are three choices: off, dim and on.

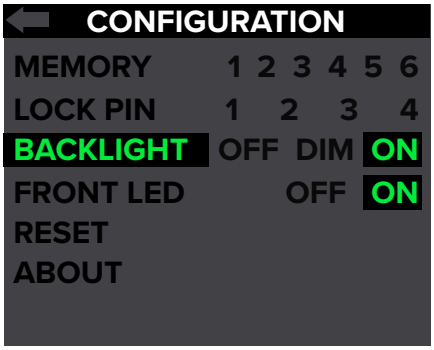

Illuminating and selecting the left-facing arrow returns you to the previous screen.

Front LED – Decide if you want the front LED on or off. When illuminated, push the speaker control knob to select between on or off.

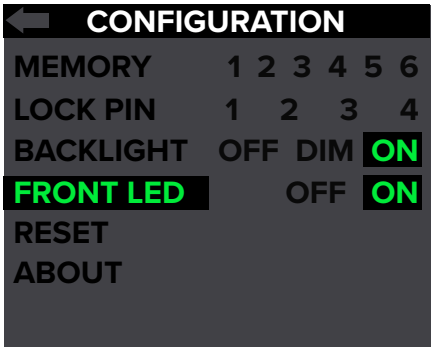

Like the previous sub-menus, configuration also has a left-facing arrow. Illuminating and selecting this simply returns you to the menu.

Reset – Resets all parameters back to their factory default. This is a permanent reset with no undo, so a confirmation dialog helps prevent accidents.

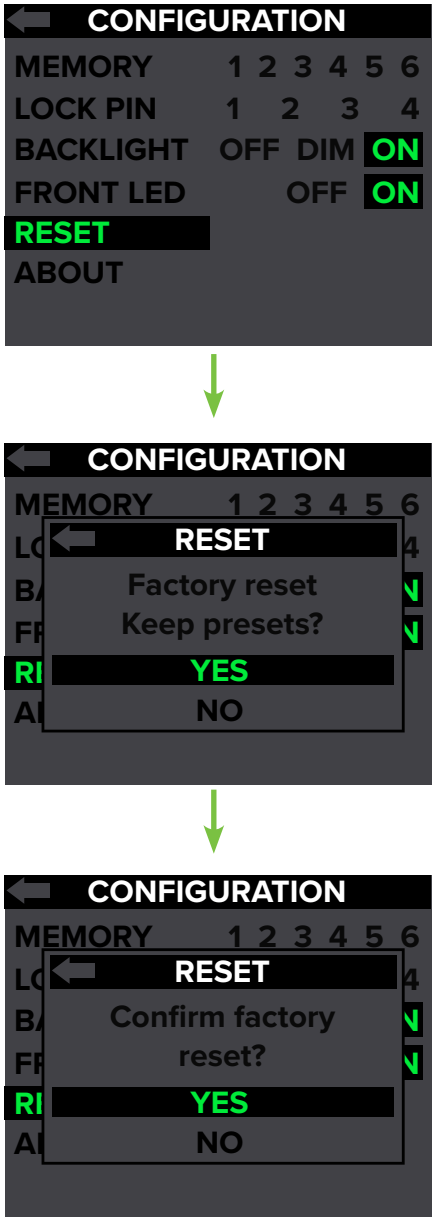

The middle screen displayed above may be of particular interest. Yes, it's true – you CAN do a factory reset and either choose to save your user presets or not!

Illuminating and selecting the left-facing arrow returns you to the previous screen.

About – Displays the current information about your loudspeaker, including the model, firmware and DSP versions, temperature, favorite movie and more. There is really only one reason to go here and that is if you've been directed so by Technical Support.

Array Usage

Having memorized the rear panel features, fully grasped the multiple hookup possibilities, and reviewed the DRM Control Dashboard™, you are nearly an expert on the Mackie DRM12A. However, we need to discuss array usage. In other words, where should the Mackie DRM12A be placed and how do you do it safely?

Every possible DRM12A combination is listed in the table below. It details the configuration, the number of DRM12A loudspeakers and DRM18S subwoofers used in the system and what setting the array mode should be in. Please refer to the table below when trying to decipher your system setup. It's gold!

Floor Mounting

The DRM12A loudspeaker is appropriate for multiple purposes. Typically, line arrays are designed to be flown. However, the DRM12A may also sit on the floor or stage as the main PA or as a front (or side) fill. Additionally, it may be pole-mounted via one of the two built-in sockets on the bottom of the cabinet. Be sure the pole is capable of supporting the weight of one or two DRM12A(s). The Mackie SPM400 is a great option for this application.

Check to make sure that the support surface (e.g., floor, etc.) has the necessary mechanical characteristics to support the weight of the loudspeaker(s).

When pole-mounting loudspeakers, be sure that they are stabilized and secured from falling over or being accidentally pushed over. Failure to follow these precautions may result in damage to the equipment, personal injury, or death.

Note that the Mackie DRM12A comes standard with two pole-cups at different angles. The desired pole-cup angle depends on many factors such as the height of the stage, if one or two DRM12As will be used, etc. We suggest using your ears to help determine which pole cup to utilize.

Configuration	Number of DRM12A loudspeakers per side	Number of DRM18S subwoofers per side	DRM12A Array Mode
Pole Mount	1 or 2	0 or 1 [Use SPM400 loudspeaker pole with DRM18S]	Single or Dual
Ground Stack on FB100 Flybar	1 or 2	0	Single or Dual
	3	0	3 – 4*
Ground Stack on DR18S Subwoofer	1 or 2	1 or 2 [each DRM18S requires its own FKDRM18S Rigging Kit]	Single or Dual
	3		3 – 4*
Flown with FB100 Flybar or PA-A2 Eyebolt Kit	1 or 2	0 to 2 [each DRM18S requires its own FKDRM18S Rigging Kit]	Single or Dual
	3 or 4		3 – 4*

*Selection of '3-4' and '3-4 Long' will depend upon the distance each box is required to cover. Longthrow mode is calculated to account for up to 100 feet of air loss compensation. For more information refer to array mode on page 16.

Protection Circuitry

The DRM12A loudspeaker employs a built-in limiter for less distortion at peak levels. Additional protection includes automatic thermal shutdown should the amp overheat. However, with Class-D amp technology, which is highly-efficient, this should never be a problem.

VERY IMPORTANT

The protection circuits are designed to protect the loudspeakers under reasonable and sensible conditions. Should you choose to ignore the warning signs [e.g. excessive distortion], you can still damage the speaker in the loudspeaker by overdriving it past the point of amplifier clipping. Such damage is beyond the scope of the warranty.

Limiting

The driver has its own compression circuit which helps protect it from damaging transient peaks. The compressor is designed to be transparent and is not noticeable under normal operating conditions.

Overexcursion Protection

A subsonic filter circuit just prior to the power amplifier prevents ultra-low frequencies from being amplified. Excessive low-frequency energy can damage the woofer by causing it to "bottom out," also know as overexcursion, which is equivalent to a mechanical form of clipping.

Thermal Protection

All amplifiers produce heat. DRM12A loudspeakers are designed to be efficient both electrically and thermally. In the unlikely event of the amplifier overheating, a built-in thermal switch will activate, muting the signal.

When the amplifier has cooled down to a safe operating temperature, the thermal switch resets itself, and the DRM12A loudspeaker resumes normal operation.

If the thermal switch activates, try turning down the level control a notch or two on the mixing console (or via the Speaker Control knob) to avoid overheating the amplifier. Be aware that direct sunlight and/or hot stage lights may be the culprit of an amplifier overheating.

AC Power

Be sure the DRM12A loudspeaker is plugged into an outlet that is able to supply the correct voltage specified for your model. It will continue to operate at lower voltages, but will not reach full power. Be sure the electrical service can supply enough amperage for all the components connected to it.

We recommend that a stiff (robust) supply of AC power be used because the amplifiers place high current demands on the AC line. The more power that is available on the line, the louder the speakers will play and the more peak output power will be available for a cleaner, punchier bass. A suspected problem of "poor bass performance" is often caused by a weak AC supply to the amplifiers.

VERY IMPORTANT

Never remove the ground pin on the power cord or any other component of the DRM12A loudspeaker. This is very dangerous.

Care and Maintenance

Your DRM12A loudspeaker will provide many years of reliable service if you follow these guidelines:

- Avoid exposing the loudspeakers to moisture. If they are set up outdoors, be sure they are under cover if rain is expected.
- Avoid exposure to extreme cold (below freezing temperatures). If you must operate the loudspeakers in a cold environment, warm up the voice coils slowly by sending a low-level signal through them for about 15 minutes prior to high-power operation.
- Use a dry cloth to clean the cabinets. Only do this when the power is turned off. Avoid getting moisture into any of the openings of the cabinet, particularly where the drivers are located.

Rigging

DRM12As may only be flown horizontally. Use M10 x 1.5 x 37 mm forged shoulder eyebolts or the optional FB100 Flybar.

WARNING: Installation should only be done by an experienced technician. Improper installation may result in damage to the equipment, injury or death. Make sure that the DRM12A is installed in a stable and secure way in order to avoid any conditions that may be dangerous for persons or structures.

WARNING: The cabinet is suitable for rigging via its fly points. NEVER attempt to suspend a DRM12A by its handles.

The fly points of the DRM12A are shown below while examples of a flown DRM12A are displayed in the hookup diagrams and on the following page.

Rigging Design Practices

Rigging a DRM12A requires determining:

1. The rigging methods and hardware that meet static, shock, dynamic, and any other load requirements for supporting the subwoofer from structure.

2. The design factor and required WLL (Working Load Limit) for this support.

We strongly recommend the following rigging practices:

1. Documentation: Thoroughly document the design with detailed drawings and parts lists.

2. Analysis: Have a qualified professional, such as a licensed Professional Engineer, review and approve the design before its implementation.

3. Installation: Have a qualified professional rigger do the installation and inspection.

4. Safety: Use adequate safety precautions and back-up systems.

Rigging Hardware and Accessories

Rigging a DRM12A will invariably require hardware not supplied by us. Various types of load-rated hardware are available from a variety of third-party sources. There are a number of such companies specializing in manufacturing hardware for designing and installing rigging systems. Each one of these tasks is a discipline in its own right. Because of the hazardous nature of rigging work and the potential liability, engage companies that specialize in these disciplines to do the work required.

We do offer certain accessory rigging items and some of them may be used with a variety of products. While these accessories are intended to facilitate installation, the wide variety of possible installation conditions and array configurations do not permit us to determine their suitability or load rating for any particular application.

We are not in the business of providing complete rigging systems, either as designers, manufacturers, or installers. It is the responsibility of the installer to provide a properly engineered, load-certified rigging system for supporting the loudspeaker from structure.

DRM12A loudspeakers may be individually flown using a PA-A2 Eyebolt Kit, part number 2051054.

At least two rigging points must be used to hang each DRM12A loudspeaker.

A note on eyebolts

Eyebolt working load limits are significantly de-rated when angular lifts are applied. If an application requires an angular lift greater than 45˚, a swivel hoist ring or similar fitting must be used. These fittings have full swivel and pivot action which helps avoid side loads.

DRM12A Fly Points

MP = Mounting Point

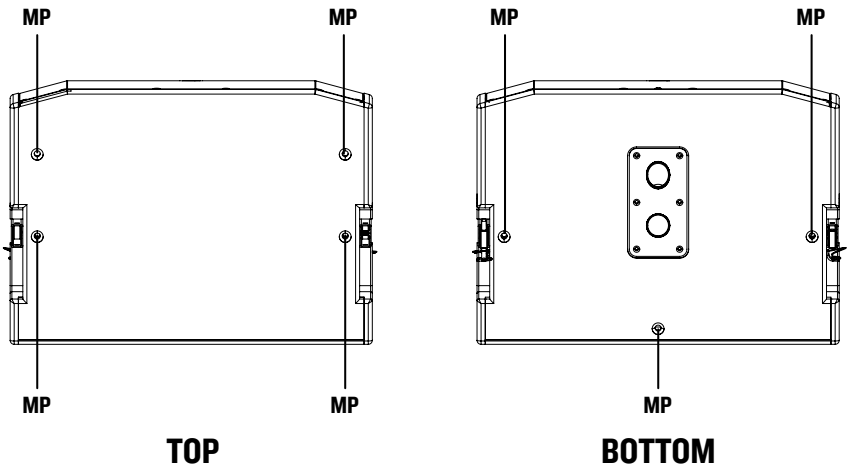

Rigging Notes

A minimum of two rigging points must be used to hang a DRM12A. More may be used for creating the desired hanging angle as shown in the illustrations below.

The illustrations provided below is just one rigging possibility. Refer to the hookup diagrams to view additional rigging suggestions.

VERY IMPORTANT

WARNING: When the FB100 Flybar is used to suspend a system, it cannot retain a 10:1 design factor at certain pick points. In some situations, suspended and installed arrays may be configured with other design factors (e.g. 8:1 or 5:1), LOUD Audio, LLC. only recommends using the desired 10:1 design factor. Please refer to the table on page 22 for the recommended setup for your system.

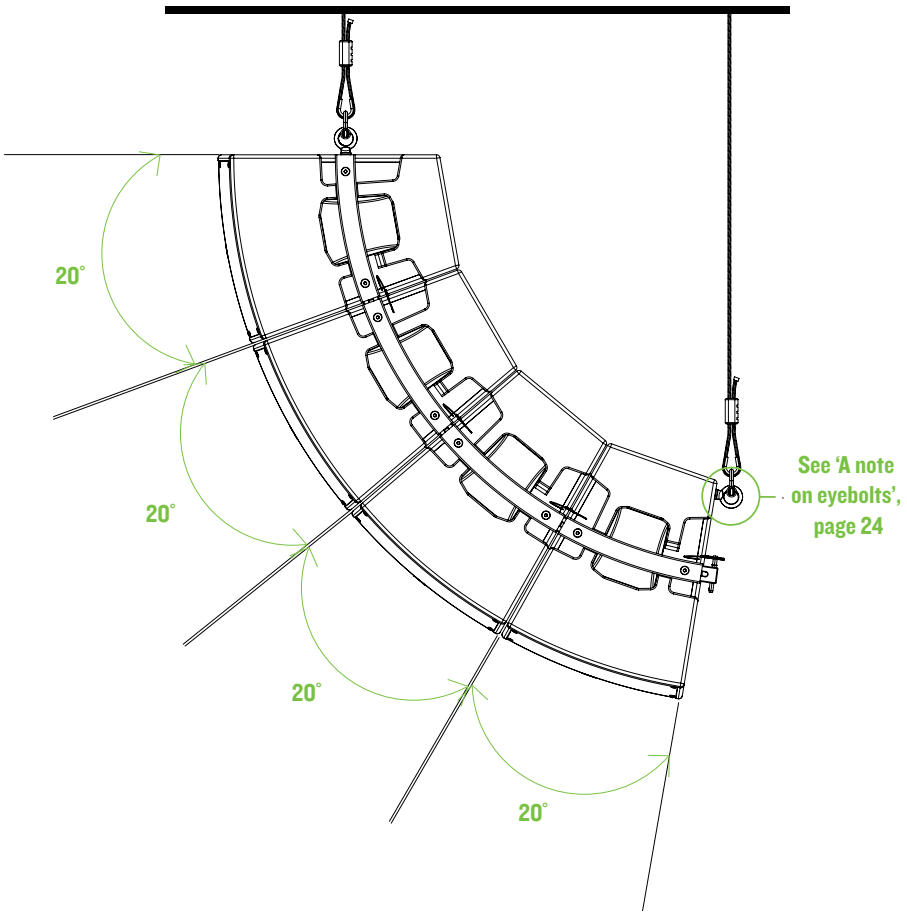

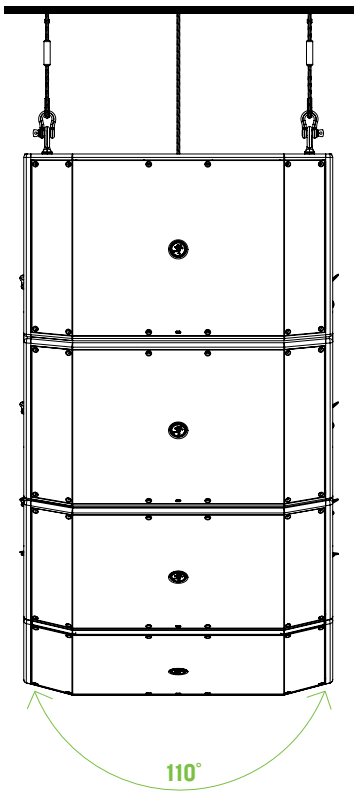

Room Acoustics

DRM12A loudspeakers are designed to sound fantastic in nearly every application.

But, room acoustics play a crucial role in the overall performance of a sound system. However, the wide high-frequency dispersion of the DRM12A loudspeakers helps to minimize the problems that typically arise.

Here are some additional placement tips to help overcome some typical room problems that might arise:

- Placing loudspeakers in the corners of a room increases the low frequency output and can cause the sound to be muddy and indistinct.

- Placing loudspeakers against a wall increases the low frequency output, though not as much as corner placement. However, this is a good way to reinforce the low frequencies, if so desired.

- Avoid placing the speakers directly on a hollow stage floor. A hollow stage can resonate at certain frequencies, causing peaks and dips in the frequency response of the room. It is better to place them on a sturdy stand designed to handle the weight of the loudspeaker.

- Position the loudspeakers so the high-frequency drivers are two to four feet above ear level for the audience (making allowances for an audience that may be standing/dancing in the aisles). High frequencies are highly directional and tend to be absorbed much easier than lower frequencies. By providing direct line-of-sight from the loudspeakers to the audience, you increase the overall brightness and intelligibility of the sound system.

- Highly reverberant rooms, like many gymnasiums and auditoriums, are a nightmare for sound system intelligibility. Multiple reflections off the hard walls, ceiling, and floor play havoc with the sound. Depending on the situation, you may be able to take some steps to minimize the reflections, such as putting carpeting on the floors, closing draperies to cover large glass windows, or hanging tapestries or other materials on the walls to absorb some of the sound.

However, in most cases, these remedies are not possible or practical. So what do you do? Making the sound system louder generally doesn't work because the reflections become louder, too. The best approach is to provide as much direct sound coverage to the audience as possible. The farther away you are from the speaker, the more prominent will be the reflected sound.

Use more speakers strategically placed so they are closer to the back of the audience. If the distance between the front and back speakers is more than about 100 feet, you should use either (1) the internal delay processor via the speaker control knob (see page 18), or (2) use an external delay processor to time-align the sound. (Since sound travels about 1 foot per millisecond, it takes about 1/10 of a second to travel 100 feet.)

Keep in mind that the array mode is another great way to compensate for some of these issues. See page 16 for more information.

Appendix A: Service Information

If you think your DRM12A loudspeaker has a problem, please check out the following troubleshooting tips and do your best to confirm the problem. Visit the Support section of our website (www.mackie.com/support) where you will find lots of useful information such as FAQs and other documentation. You may find the answer to the problem without having to part with your loudspeaker.

Troubleshooting

No power

- Our favorite question: Is it plugged in? Make sure the AC outlet is live [check with a tester or lamp].
- Make sure the line cord is securely seated in the line cord socket and plugged all the way into the AC outlet.
- Is the power LED on the front panel illuminated? If not, make sure the AC outlet is live. If so, refer to "No sound" below.
- The internal AC line fuse may be blown. This is not a user serviceable part. If you suspect the AC line fuse is blown, please see the "Repair" section next.

No sound

- Is the level knob for the input source turned all the way down? Verify that all the volume controls in the system are properly adjusted. Look at the level meter to ensure that the mixer is receiving a signal.
- Is the signal source working? Make sure the connecting cables are in good repair and securely connected at both ends. Make sure the output level control on the mixing console is turned up sufficiently to drive the inputs of the speaker.
- Make sure the mixer does not have a mute on or a processor loop engaged. If you find something like this, make sure the level is turned down before disengaging the offending switch.
- Has it shut down? Make sure there is at least six inches of free space behind each DRM12A loudspeaker.

Poor sound

- Is it loud and distorted? Make sure that you're not overdriving a stage in the signal chain. Verify that all level controls are set properly.
- Is the input connector plugged completely into the jack? Be sure all connections are secure.

Noise

- Make sure all connections to the loudspeakers are good and sound.
- Make sure none of the signal cables are routed near AC cables, power transformers, or other EMI-inducing devices.
- Is there a light dimmer or other SCR-based device on the same AC circuit as the DRM loudspeaker? Use an AC line filter or plug the loudspeaker into a different AC circuit.

Hum

- Try disconnecting the cable connected to the input jack. If the noise disappears, it could be a "ground loop," rather than a problem with the DRM12A loudspeaker. Try some of the following troubleshooting ideas:
    - Use balanced connections throughout your system for the best noise rejection.
    - Whenever possible, plug all the audio equipment's line cords into outlets which share a common ground. The distance between the outlets and the common ground should be as short as possible.

Other Issues

- Please email or call Technical Support if you are having any other issue not listed here:
    - mackie.com/support-contact
    - 1-800-898-3211

Repair

For warranty service, refer to the warranty information on page 31.

Non-warranty service is available at a factory-authorized service center. To locate the nearest service center, visit www.mackie.com/support/service-locator. Service for DRM12A loudspeakers living outside the United States may be obtained through local dealers or distributors.

If you do not have access to our website, please call our Tech Support department at 1-800-898-3211 (normal business hours, Pacific Time), to explain the problem. They will tell you where the nearest factory-authorized service center is located in your area.

Appendix B: Technical Information

DRM12A Loudspeaker Specifications

Acoustic Performance

Frequency Range (–10 dB):	50 Hz – 20 kHz
Frequency Range (–3 dB):	65 Hz – 20 kHz
Horizontal Coverage Angle:	110º
Vertical Coverage Angle:	20º
Maximum SPL Peak:	135 dB

Transducers

Low Frequency:	12 in / 305 mm with ferrite
High Frequency:	3x 1.0 in / 25 mm titanium dome compression drivers

Array Coverage

Horizontal Coverage (–6 dB):	110˚ averaged 2 kHz to 10 kHz
Vertical Coverage (–6 dB):	
1x DRM12A	20˚ averaged 2 kHz to 10 kHz
2x DRM12A	40˚ averaged 2 kHz to 10 kHz
3x DRM12A	60˚ averaged 2 kHz to 10 kHz
4x DRM12A	80˚ averaged 2 kHz to 10 kHz

Array Mode

Single:	Voicing for an array with 1 DRM12A
Dual:	Voicing for an array with 2 DRM12As
3 – 4:	Voicing for an array with 3-4 DRM12As
3 – 4 Long:	Long Throw Voicing for an array with 3-4 DRM12As

*See pages 13-14 for more information.

Power Amplifiers

System Power Amplification	
Rated Power	2000 watts peak
Low Frequency Power Amplifier	
Rated Power:	1620 watts peak
Rated THD	< 1%
Cooling	Convection
Design:	Class D
High Frequency Power Amplifier	
Rated Power:	380 watts peak
Rated THD	< 1%
Cooling	Convection
Design:	Class D

System Processing

Array Mode	4 array modes
Subwoofer HPF	Off, DRM18S, Var
Main Output EQ	3-band
Delay	0 – 100 ms

Equalization

Low	±12 dB @ 20 Hz – 200 Hz
Mid	±12 dB @ 200 Hz – 2.00 kHz
High	±12 dB @ 2.00 kHz – 20.0 kHz
HPF	40 Hz – 160 Hz (Var)

Input/Output

Input Type:	Female XLR Balanced
Mic Impedance:	8 kΩ balanced
Output Type:	Male XLR Balanced
Mix Out Impedance:	600 Ω balanced
Main Control:	Rotating knob

Electronic Crossover

Crossover Type:	24 dB/octave
Crossover Frequency:	1.0 kHz

Line Input Power

Detachable line cord	100 – 120 VAC, 50 – 60 Hz, 175W 220 – 240 VAC, 50 – 60 Hz, 175W
AC In Connector	Locking Neutrik PowerCon® A, 20 amp, 250 VAC, Max input 1400W
AC Thru Connector	Locking Neutrik PowerCon® B, 20 amp, 250 VAC, Max input 1250W
Power Supply Type	Switchmode

Safety Features

Input Protection	Peak and RMS limiting, power supply and amplifier thermal protection
Display LEDs	Defeatable front power, Speaker Control
Status Info	Input and output levels, array mode, high-pass filter, EQ and delay settings

DRM12A Loudspeaker Specifications continued...

Construction Features

Basic Design:	Horizontal Trapezoidal
Enclosure Material:	15mm plywood
Enclosure Finish:	Black Polyurea
Grille Material:	16-18 gauge perforated steel
Grille Finish:	Powder-coated black
Handles:	One on each side
Display LEDs	
Front:	Power ON
Rear:	Speaker Control
Operating Temperature:	0 – 40 °C 32 – 104 °F

Physical Properties

Height:	15.2 in / 386 mm
Width:	24.7 in / 627 mm
Depth:	18.0 in / 457 mm
Weight:	55.0 lb / 24.9 kg

Mounting Methods:

Floor mount, pole mount via the built-in socket on the bottom of the cabinet [Be sure the pole is capable of supporting the weight of the DRM12A loudspeaker] or fly via the integrated M10 mounting points (using M10 x 1.5 x 20 mm forged shoulder eyebolts).

See page 22, 24-26 for more information.

Options

DRM12A Cover	P/N 2036809-52
FB100 Flybar Kit	P/N 2050041
SPM400 Loudspeaker Pole Mount	P/N 2051055
PA-A2 Forged Shoulder Eyebolt Kit (3 x M10 x 1.5 x 20 mm)	P/N 2051054

Disclaimer

Since we are always striving to make our products better by incorporating new and improved materials, components, and manufacturing methods, we reserve the right to change these specifications at any time without notice.

The "Running Man" figure is a registered trademark of LOUD Audio, LLC.

All other brand names mentioned are trademarks or registered trademarks of their respective holders, and are hereby acknowledged.

©2019 LOUD Audio, LLC.
All Rights Reserved.

DRM12A Frequency Graph

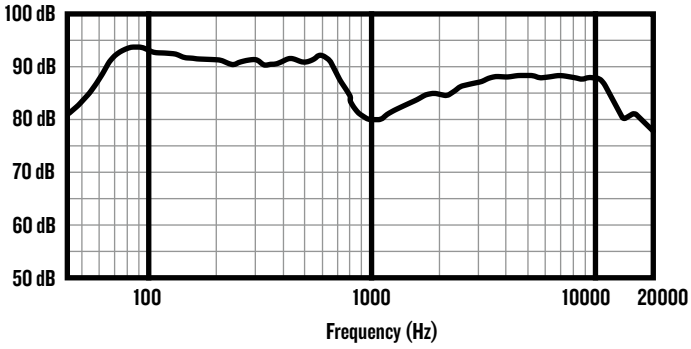

DRM12A Loudspeaker Dimensions

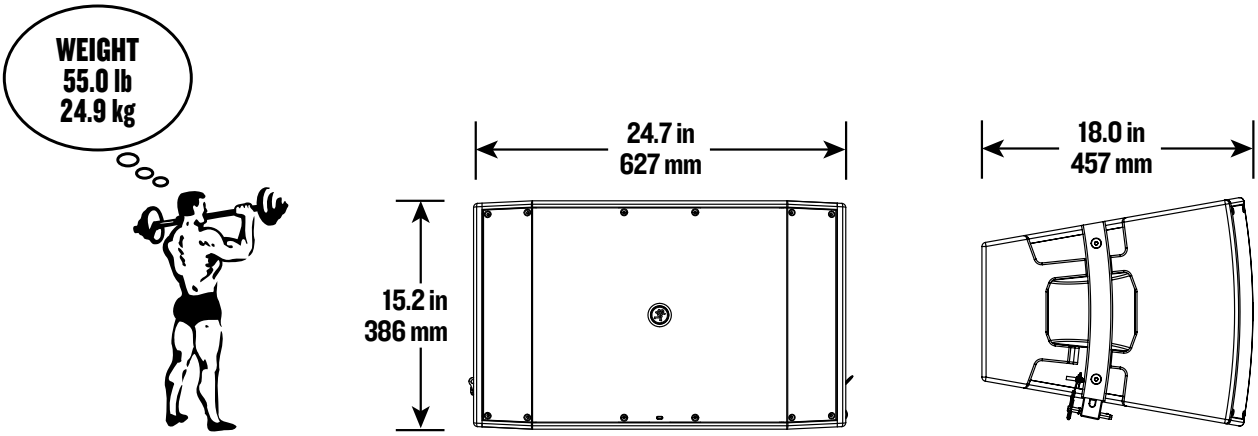

DRM12A Loudspeaker Block Diagram

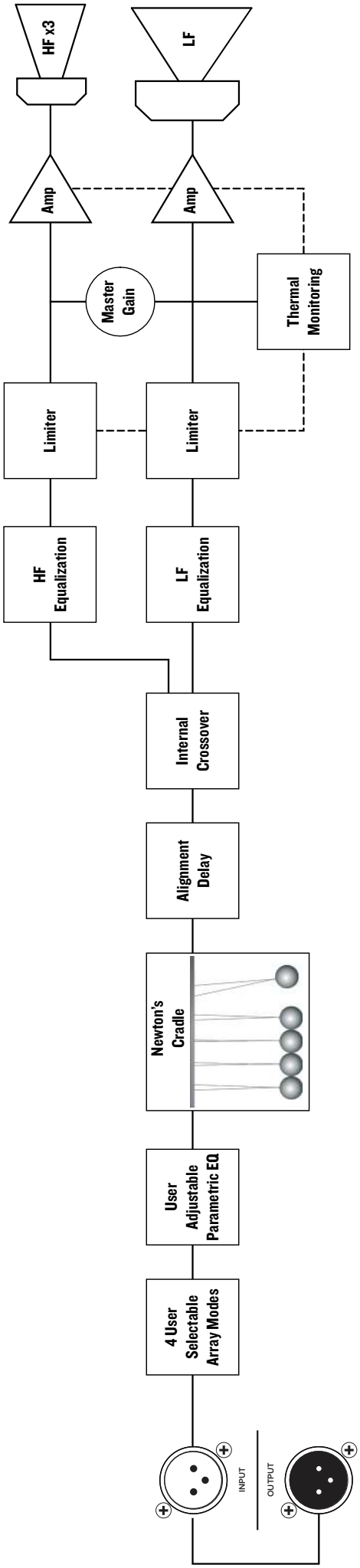

Limited Warranty

Please keep your sales receipt in a safe place.

This Limited Product Warranty ("Product Warranty") is provided by LOUD Audio, LLC ("LOUD") and is applicable to products purchased in the United States or Canada through a LOUD-authorized reseller or dealer. The Product Warranty will not extend to anyone other than the original purchaser of the product (hereinafter, "Customer," "you" or "your").

For products purchased outside the U.S. or Canada, please visit www.mackie.com to find contact information for your local distributor, and information on any warranty coverage provided by the distributor in your local market.

LOUD warrants to Customer that the product will be free from defects in materials and workmanship under normal use during the Warranty Period. If the product fails to conform to the warranty then LOUD or its authorized service representative will at its option, either repair or replace any such nonconforming product, provided that Customer gives notice of the noncompliance within the Warranty Period to the Company at: www.mackie.com or by calling LOUD technical support at 1.800.898.3211 (toll-free in the U.S. and Canada) during normal business hours Pacific Time, excluding weekends or LOUD holidays. Please retain the original dated sales receipt as evidence of the date of purchase. You will need it to obtain any warranty service.

For full terms and conditions, as well as the specific duration of the Warranty for this product, please visit www.mackie.com.

The Product Warranty, together with your invoice or receipt, and the terms and conditions located at www.mackie.com constitutes the entire agreement, and supersedes any and all prior agreements between LOUD and Customer related to the subject matter hereof. No amendment, modification or waiver of any of the provisions of this Product Warranty will be valid unless set forth in a written instrument signed by the party to be bound thereby.

Need help with the DRM12A arrayable loudspeaker?

- **Visit www.mackie.com/support to find: FAQs, manuals, addendums, and other documents.**
- **Email us at: www.mackie.com/support-contact**
- **Telephone 1-800-898-3211 to speak with one of our splendid technical support chaps (Monday through Friday, normal business hours, Pacific Time).**

16220 Wood-Red Road NE
Woodinville, WA 98072 • USA
Phone: 425.487.4333
Toll-free: 800.898.3211
Fax: 425.487.4337
www.mackie.com