AOC GAMING

USER MANUAL

C27G42E

AOC GAMING MONITOR

©2025 AOC. All rights reserved

Version: A00

WWW.AOC.COM

Safety 1
National Conventions 1
Power 2
Installation 3
Cleaning 4
Other 5

Setup 6
Contents in Box 6
Set-up Stand & Base 7
Adjusting Viewing Angle 8
Connecting the Monitor 9
Wall Mounting 10
Adaptive-Sync function 11
HDR 12

Adjusting 13
Hotkeys 13
OSD Setting 14
Game Setting 15
Picture 17
Settings 19
Audio 20
OSD Setup 21
Information 22
LED Indicator 23

Troubleshoot 24

Specification 25
General Specification 25
AOC Monitors Panel Pixel Defect Policy 26
Preset Display Modes 28
Pin Assignments 29
Plug and Play 30

Safety

National Conventions

The following subsections describe national conventions used in this document.

Notes, Cautions, and Warnings

Throughout this guide, blocks of text may be accompanied by an icon and printed in bold type or in italic type. These blocks are notes, cautions, and warnings, and they are used as follows:

NOTE: A NOTE indicates important information that helps you make better use of your computer system.

CAUTION: A CAUTION indicates either potential damage to hardware or loss of data and tells you how to avoid the problem.

WARNING: A WARNING indicates the potential for bodily harm and tells you how to avoid the problem. Some warnings may appear in alternate formats and may be unaccompanied by an icon. In such cases, the specific presentation of the warning is mandated by regulatory authority.

Power

The monitor should be operated only from the type of power source indicated on the label. If you are not sure of the type of power supplied to your home, consult your dealer or local power company.

The monitor is equipped with a three-pronged grounded plug, a plug with a third (grounding) pin. This plug will fit only into a grounded power outlet as a safety feature. If your outlet does not accommodate the three-wire plug, have an electrician install the correct outlet, or use an adapter to ground the appliance safely. Do not defeat the safety purpose of the grounded plug.

Unplug the unit during a lightning storm or when it will not be used for long periods of time. This will protect the monitor from damage due to power surges.

Do not overload power strips and extension cords. Overloading can result in fire or electric shock.

To ensure satisfactory operation, use the monitor only with UL listed computers which have appropriate configured receptacles marked between 100-240V AC, Min. 5A.

The wall socket shall be installed near the equipment and shall be easily accessible.

Installation

Do not place the monitor on an unstable cart, stand, tripod, bracket, or table. If the monitor falls, it can injure a person and cause serious damage to this product. Use only a cart, stand, tripod, bracket, or table recommended by the manufacturer or sold with this product. Follow the manufacturer's instructions when installing the product and use mounting accessories recommended by the manufacturer. A product and cart combination should be moved with care.

Never push any object into the slot on the monitor cabinet. It could damage circuit parts causing a fire or electric shock. Never spill liquids on the monitor.

Do not place the front of the product on the floor.

If you mount the monitor on a wall or shelf, use a mounting kit approved by the manufacturer and follow the kit instructions.

Leave some space around the monitor as shown below. Otherwise, air-circulation may be inadequate hence overheating may cause a fire or damage to the monitor.

To avoid potential damage, for example the panel peeling from the bezel, ensure that the monitor does not tilt downward by more than -5 degrees. If the -5 degree downward tilt angle maximum is exceeded, the monitor damage will not be covered under warranty.

See below the recommended ventilation areas around the monitor when the monitor is installed on the wall or on the stand:

Installed with stand

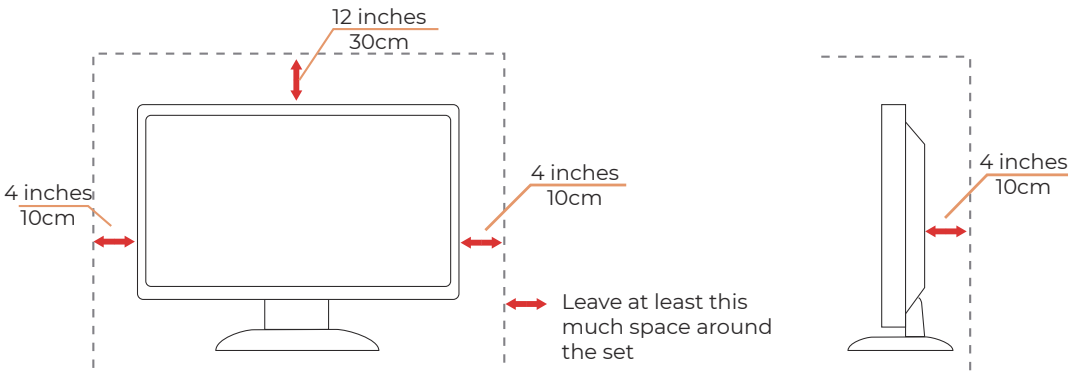

Cleaning

Clean the cabinet regularly with a water-dampened, soft cloth.

When cleaning use a soft cotton or microfiber cloth. The cloth should be damp and almost dry, do not allow liquid into the case.

Please disconnect the power cord before cleaning the product.

Other

If the product is emitting a strange smell, sound or smoke, disconnect the power plug IMMEDIATELY and contact a Service Center.

Make sure that the ventilating openings are not blocked by a table or curtain.

Do not engage the LCD monitor in severe vibration or high impact conditions during operation.

Do not knock or drop the monitor during operation or transportation.

The power cords shall be safety approved. For Germany, it shall be H03VV-F, 3G, 0.75 mm^2, or better. For other countries, the suitable types shall be used accordingly.

Excessive sound pressure from earphones and headphones can cause hearing loss. Adjustment of the equalizer to maximum increases the earphones and headphones output voltage and therefore the sound pressure level.

Setup

Contents in Box

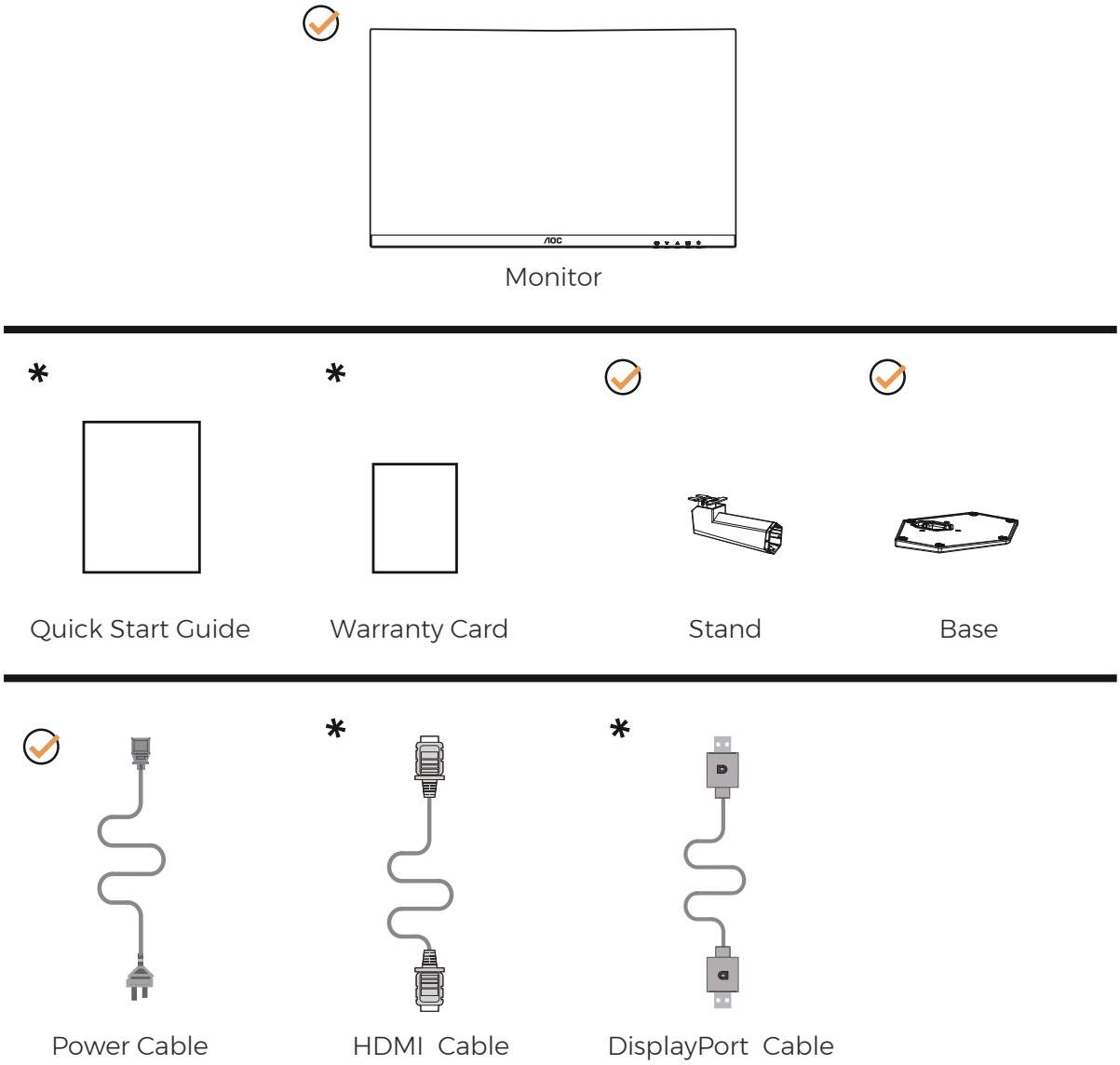

*Not all signal cables will be provided for all countries and regions. Please check with the local dealer or AOC branch office for confirmation.

Set-up Stand & Base

Please setup or remove the base following the steps as below.

Setup:

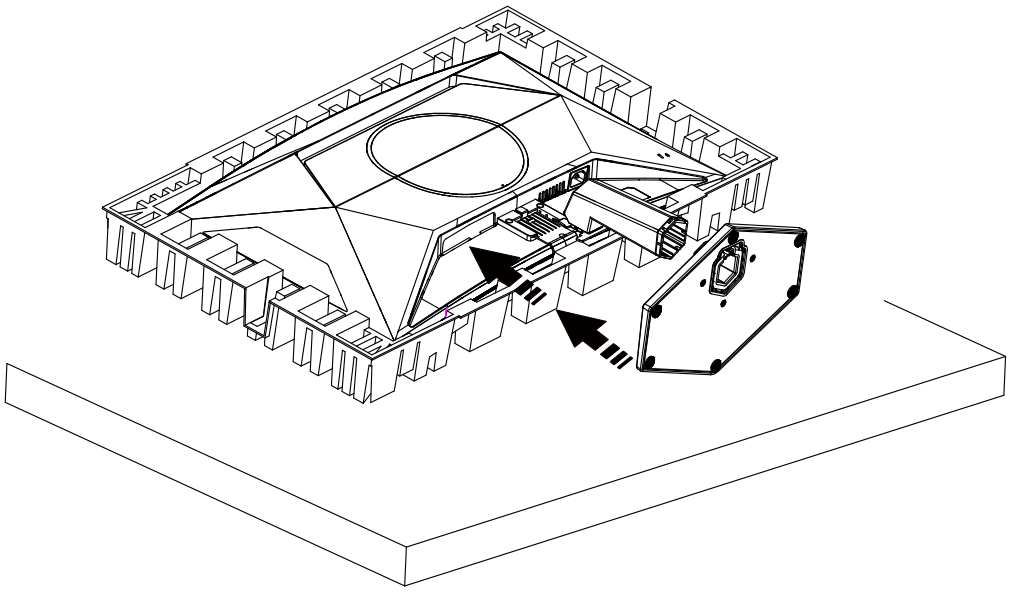

Remove:

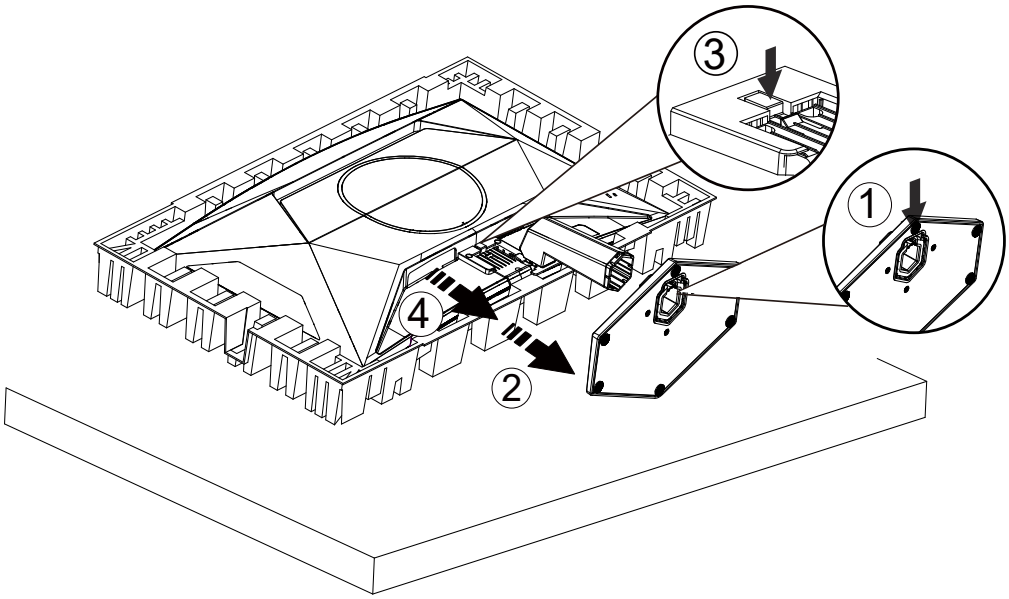

NOTE: Display design may differ from those illustrated.

Adjusting Viewing Angle

To achieve the best viewing experience, it is recommended that the user can make sure they are able to look at their whole face on the screen, then adjust the monitor's angle based on personal preference.
Hold the stand so you will not topple the monitor when you change the monitor's angle.
You are able to adjust the monitor as below:

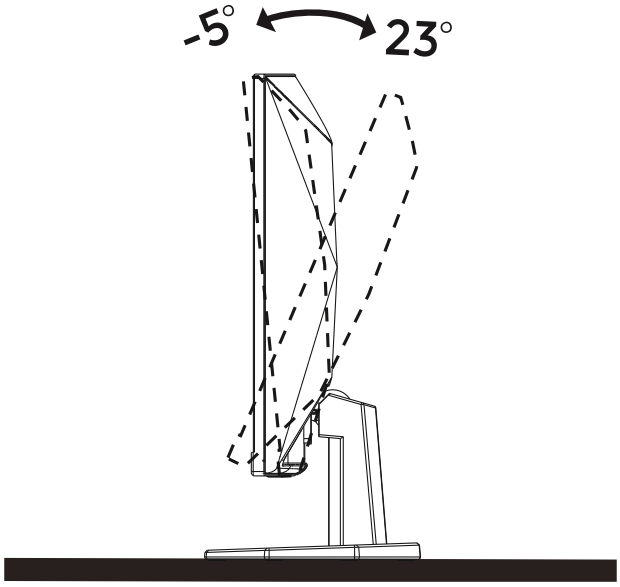

NOTE:

Do not touch the LCD screen when you change the angle. Touching the LCD screen may cause damage.

Warning

- To avoid potential screen damage, such as panel peeling, ensure that the monitor does not tilt downward by more than -5 degrees.
- Do not press the screen while adjusting the angle of the monitor. Grasp only the bezel.

Connecting the Monitor

Cable Connections In Back of Monitor and Computer:

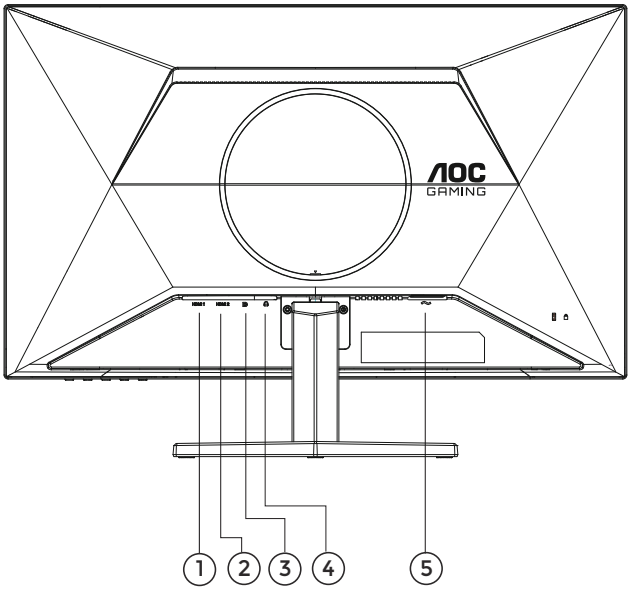

1. HDMI 1
2. HDMI 2
3. DisplayPort
4. Earphone
5. Power

Connect to PC

1. Connect the power cord to the back of the display firmly.
2. Turn off your computer and unplug its power cable.
3. Connect the display signal cable to the video connector on the back of your computer.
4. Plug the power cord of your computer and your display into a nearby outlet.
5. Turn on your computer and display.

If your monitor displays an image, installation is complete. If it does not display an image, please refer to Troubleshoot.

To protect equipment, always turn off the PC and LCD monitor before connecting.

Wall Mounting

Preparing to Install An Optional Wall Mounting Arm.

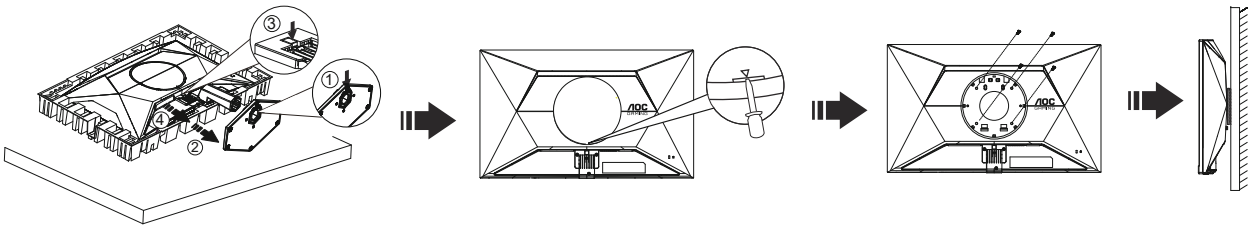

This monitor can be attached to a wall mounting arm you purchase separately. Disconnect power before this procedure. Follow these steps:

1. Remove the base.
2. Insert a flat-head screwdriver or other flat tool into the slot and open the rear cover.
3. Follow the manufacturer's instructions to assemble the wall mounting arm.
4. Place the wall mounting arm onto the back of the monitor. Line up the holes of the arm with the holes in the back of the monitor.
5. Insert the 4 screws into the holes and tighten.
6. Reconnect the cables. Refer to the user's manual that came with the optional wall mounting arm for instructions on attaching it to the wall.

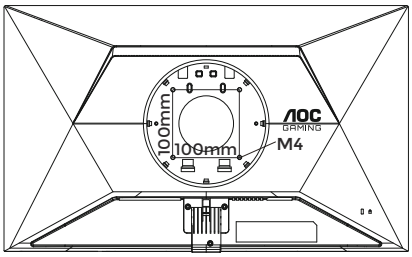

Specification of wall hanger screws: M4*(10+X)mm (X=Thickness of Wall mount bracket)

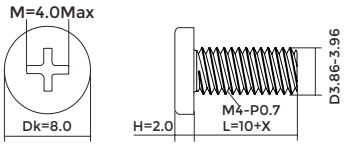

Note: VESA mounting screw holes are not available for all models, please check with the dealer or official department of AOC. Always contact manufacturer for wall-mount installation.

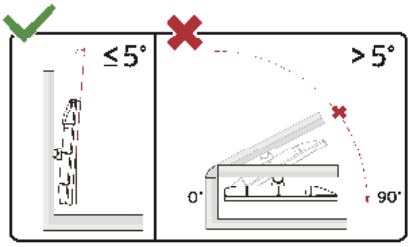

* Display design may differ from those illustrated.

WARNING:

1. To avoid potential screen damage, such as panel peeling, ensure that the monitor does not tilt downward by more than -5 degrees.
2. Do not press the screen while adjusting the angle of the monitor. Grasp only the bezel.

Adaptive-Sync function

1. Adaptive-Sync function works with DisplayPort/HDMI
2. Compatible Graphics Card: Recommended list is as below, also could be checked by visiting www.AMD.com

Graphics Cards

- Radeon™ RX Vega series
- Radeon™ RX 500 series
- Radeon™ RX 400 series
- Radeon™ R9/R7 300 series (R9 370/X, R7 370/X, R7 265 except)
- Radeon™ Pro Duo (2016)
- Radeon™ R9 Nano series
- Radeon™ R9 Fury series
- Radeon™ R9/R7 200 series (R9 270/X, R9 280/X except)

Processors

- AMD Ryzen™ 7 2700U
- AMD Ryzen™ 5 2500U
- AMD Ryzen™ 5 2400G
- AMD Ryzen™ 3 2300U
- AMD Ryzen™ 3 2200G
- AMD PRO A12-9800
- AMD PRO A12-9800E
- AMD PRO A10-9700
- AMD PRO A10-9700E
- AMD PRO A8-9600
- AMD PRO A6-9500
- AMD PRO A6-9500E
- AMD PRO A12-8870
- AMD PRO A12-8870E
- AMD PRO A10-8770
- AMD PRO A10-8770E
- AMD PRO A10-8750B
- AMD PRO A8-8650B
- AMD PRO A6-8570
- AMD PRO A6-8570E
- AMD PRO A4-8350B
- AMD A10-7890K
- AMD A10-7870K
- AMD A10-7850K
- AMD A10-7800
- AMD A10-7700K
- AMD A8-7670K
- AMD A8-7650K
- AMD A8-7600
- AMD A6-7400K

HDR

It is compatible with input signals in HDR10 format.
The display may automatically activate the HDR function if the player and content are compatible. Please contact the device manufacturer and the content provider for information on the compatibility of your device and content. Please select “OFF” for the HDR function when you have no need for automatical activation function.

Note:

1. No special setting is needed for the DisplayPort/HDMI interface in WIN10 versions lower (older) than V1703.
2. Only the HDMI interface is available and the DisplayPort interface cannot function in WIN10 version V1703.
3. Display Setting:

a. The display resolution is set to 1920*1080, and HDR is preset to ON.
b. After entering an application, the best HDR effect can be achieved when the resolution is changed to 1920*1080 (if available).

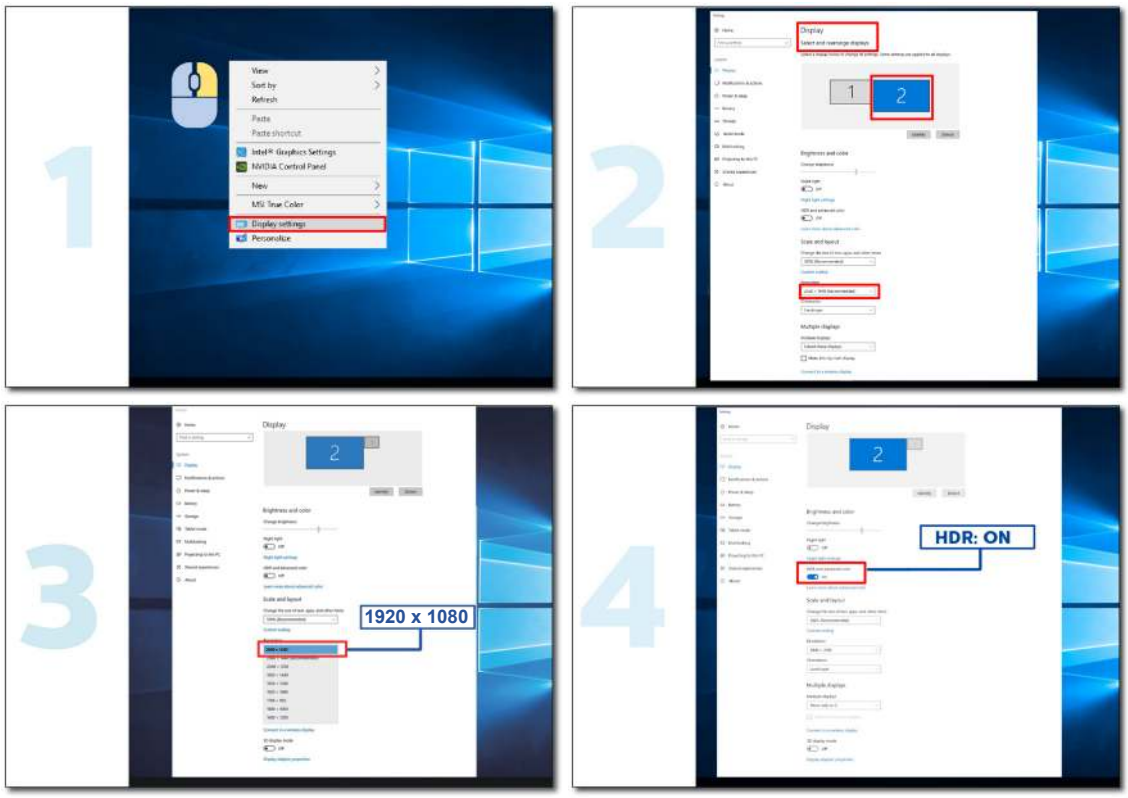

Adjusting

Hotkeys

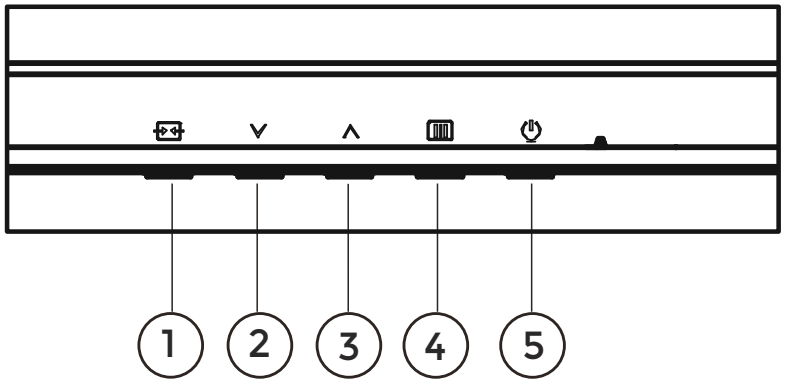

1	Source/Exit
2	Gaming Mode
3	Dial Point
4	Menu/Enter
5	Power

Menu/Enter

Press to display the OSD or confirm the selection.

Power

Press the Power button to turn on the monitor.

Dial Point

When there is no OSD, press Dial Point button to show / hide Dial Point.

Gaming Mode

When there is no OSD, press "∨" key to open Gaming mode function, then press "∨" or "∧" key to select Gaming mode (Standard, FPS, RTS, Racing, Gamer 1, Gamer 2 or Gamer 3) basing on the different game types.

Source/Exit

When the OSD is closed, press Source/Exit button will be Source hot key function.
When the OSD menu is active, this button acts as an exit key (to exit the OSD menu).

OSD Setting

Basic and simple instruction on the control keys.

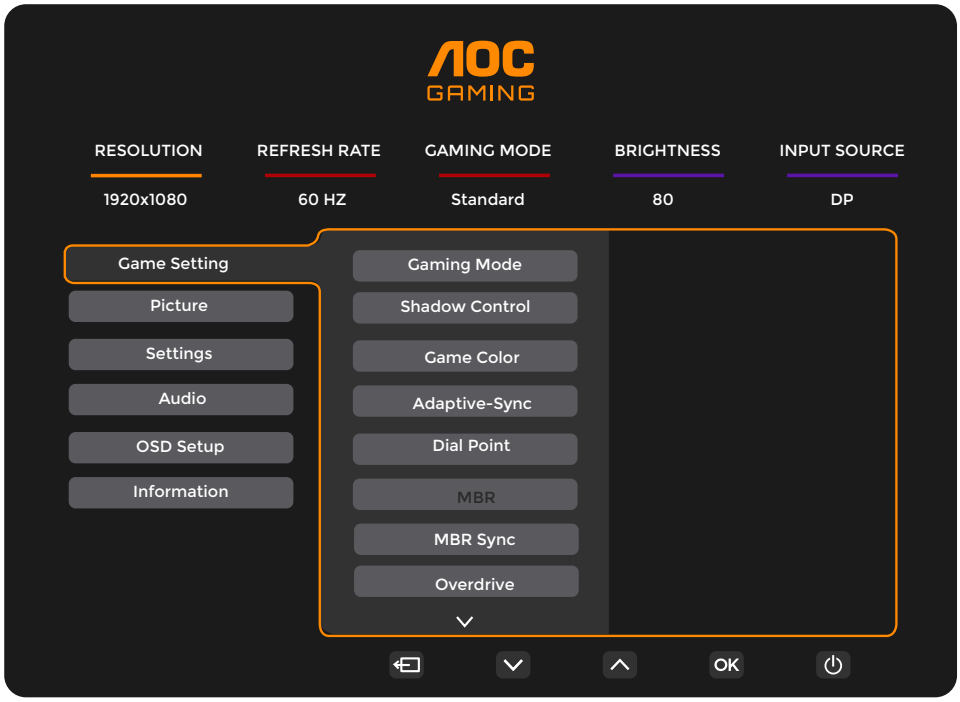

1). Press the **MENU-button** to activate the OSD window.

2). Press ∨or∧ to navigate through the functions. Once the desired function is highlighted, press the **MENU-button / OK** to activate it, press∨or∧ to navigate through the sub-menu functions. Once the desired sub-menu function is highlighted, press **MENU-button / OK** to activate it.

3). Press∨ or∧ to change the settings of the selected function. Press **/** to exit. If you want to adjust any other function, repeat steps 2-3.

4). OSD Lock Function: To lock the OSD, press and hold the MENU-button while the monitor is off and then press power button to turn the monitor on. To unlock the OSD - press and hold the MENU-button while the monitor is off and then press power button to turn the monitor on.

Notes:

1). If the product has only one signal input, the item of “Input Select” is unable to be adjusted.

2). If the input signal resolution is native resolution, then the item “Image Ratio” is invalid.

Game Setting

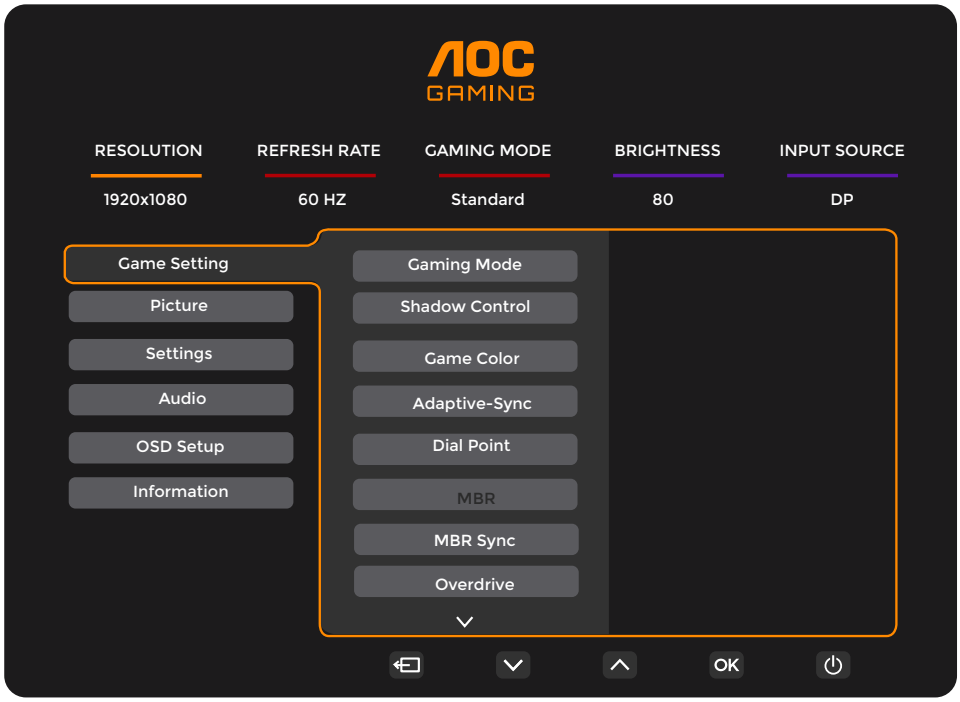

Gaming Mode	Standard	Enhance readability for suitable web and mobile games.
	FPS	For playing FPS (first Person Shooters) games. Improves black level in dark theme.
	RTS	For playing RTS (Real Time Strategy) games. Improves the image quality.
	Racing	For playing Racing games, Provides fastest response time and high color saturation.
	Gamer 1	User's preference settings saved as Gamer 1.
	Gamer 2	User's preference settings saved as Gamer 2.
	Gamer 3	User's preference settings saved as Gamer 3.
Shadow Control	0 ~ 20	Shadow Control Default is 0, then end-user can adjust from 0 to 20 increase for a clearer picture. If picture is too dark to be saw the detail clearly, adjusting from 0 to 20 for a clear picture.
Game Color	0 ~ 20	Game Color will provide 0-20 level for adjusting saturation to get a better picture.
Adaptive-Sync	Off / On	Disable or Enable Adaptive-Sync. Adaptive-Sync Run Reminder: When the Adaptive-Sync feature is enabled, there may be flashing in some game environments.
Dial Point	Off / On / Dynamic	The"Dial Point"function places an aiming indicator in the center of screen for helping gamers to play First Person Shooter (FPS) games with accurate and precise aiming.
MBR	0 ~ 20	MBR (Motion Blur Reduction) Provides 0-20 levels of adjustments to reduce motion blur. Note: 1. The MBR function can be adjusted when Adaptive-Sync is turned off, and the refresh rate ≥75Hz. 2. The brightness of the screen will decrease as the adjustment value increases.
MBR Sync	Off / On	Disable or Enable MBR Sync (Motion Blur Remove).

Overdrive	Normal	Adjust the response time. Note: 1. If the user adjusts OverDrive to “Fastest” the displayed image may be blurred. Users can adjust the OverDrive level or turn it off according to their preferences. 2. The “Extreme” function is optional when Adaptive-Sync is turned off, and the refresh rate is ≥75Hz. 3. The screen brightness will decrease when the “Extreme”function is turned on.
	Fast	
	Faster	
	Fastest	
	Extreme	
Frame Counter	Off / Right-up / Right-Down / Left-Up / Left-Down	Display V frequency on the corner selected.

Note:

1). When “HDR Mode” under “Picture” is enable, the items “Shadow Control”, “Game Color” cannot be adjusted.

2). When “HDR” under “Picture” is set to “DisplayHDR”, the items “Gaming Mode”, “Shadow Control”, “Game Color”, “MBR” and “MBR Sync” can not be adjusted. “Extreme” under “Overdrive“ is not available.

3). When the “Color Space” under “Picture” is set to sRGB, the items “Shadow Control”, and “Game Color” cannot be adjusted.

Picture

Brightness	0-100	Backlight Adjustment.
Contrast	0-100	Contrast from Digital-register.
Gamma	1.8 / 2.0 / 2.2 / 2.4 / 2.6	Adjust Gamma.
Eco Adjustment	Standard	Standard Mode.
	Text	Text Mode.
	Internet	Internet Mode.
	Game	Game Mode.
	Movie	Movie Mode.
	Sports	Sports Mode.
	Reading	Reading Mode.
Color Temp.	Warm	Recall Warm Color Temperature.
	Normal	Recall Normal Color Temperature.
	Cool	Recall Cool Color Temperature.
	User	Restore Color Temperature.
Red	0-100	Red gain from Digital-register.
Green	0-100	Green gain from Digital-register.
Blue	0-100	Blue gain from Digital-register.

HDR	Off	Set the HDR profile according to your usage requirements. Note: When HDR is detected, the HDR option is displayed for adjustment.
	DisplayHDR	
	HDR Picture	
	HDR Movie	
	HDR Game	
HDR Mode	Off	Optimized for the color and contrast of the picture, which will simulate showing the HDR effect. Note: When HDR is not detected, the HDR Mode option is displayed for adjustment.
	HDR Picture	
	HDR Movie	
	HDR Game	
DCR	Off	Disable dynamic contrast ratio.
	On	Enable dynamic contrast ratio.
Color Space	Panel Native	Standard color space panel.
	sRGB	sRGB Color space.
LowBlue Mode	Off	Decrease blue light wave by controlling color temperature.
	Multimedia	
	Internet	
	Office	
	Reading	
Image Ratio	Full / Aspect	Select image ratio for display.

Note:

1). When “HDR” is set to “DisplayHDR” , all the items except “HDR“ under “Picture” cannot be adjusted.
2). When “HDR Mode” is enable, all the items except “HDR Mode”, “Brightness”, “DCR” cannot be adjusted.
3). When the “Color Space” is set to sRGB, all the items except “Color Space”, “Brightness”, “DCR” cannot be adjusted.
4). When the “Eco Adjustment” is set to Reading, “Color Temp.”, “Game Color”, “LowBlue Mode”, “MBR”, “MBR Sync” cannot be adjusted.

Settings

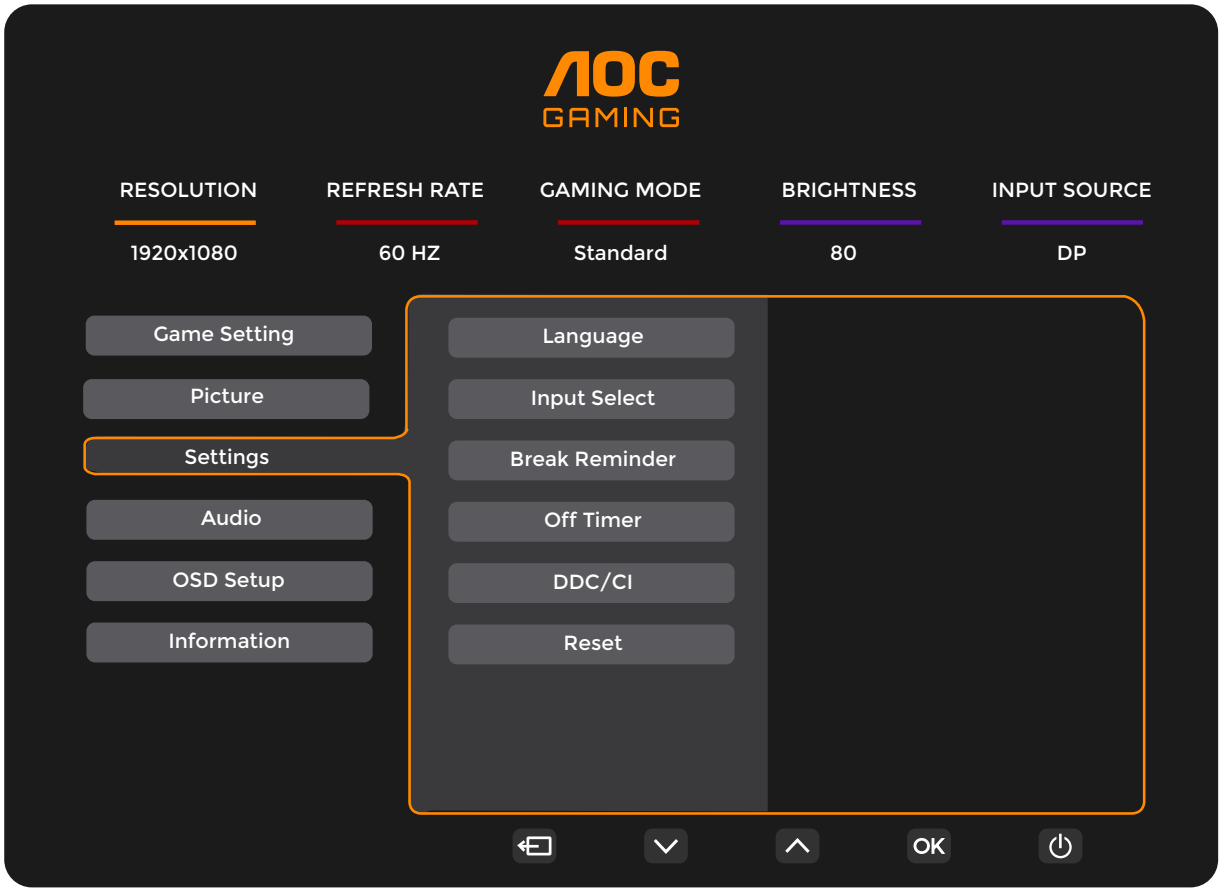

Language		Select the OSD language.
Input Select	Auto / HDMI1 / HDMI2 / DP	Select Input Signal Source.
Break Reminder	Off / On	Break reminder if the user continuously works for more than 1hrs.
Off Timer	0-24 hrs	Select DC off time.
DDC/CI	No / Yes	Turn On/Off DDC/CI Support.
Reset	No / Yes	Reset the menu to default.

Audio

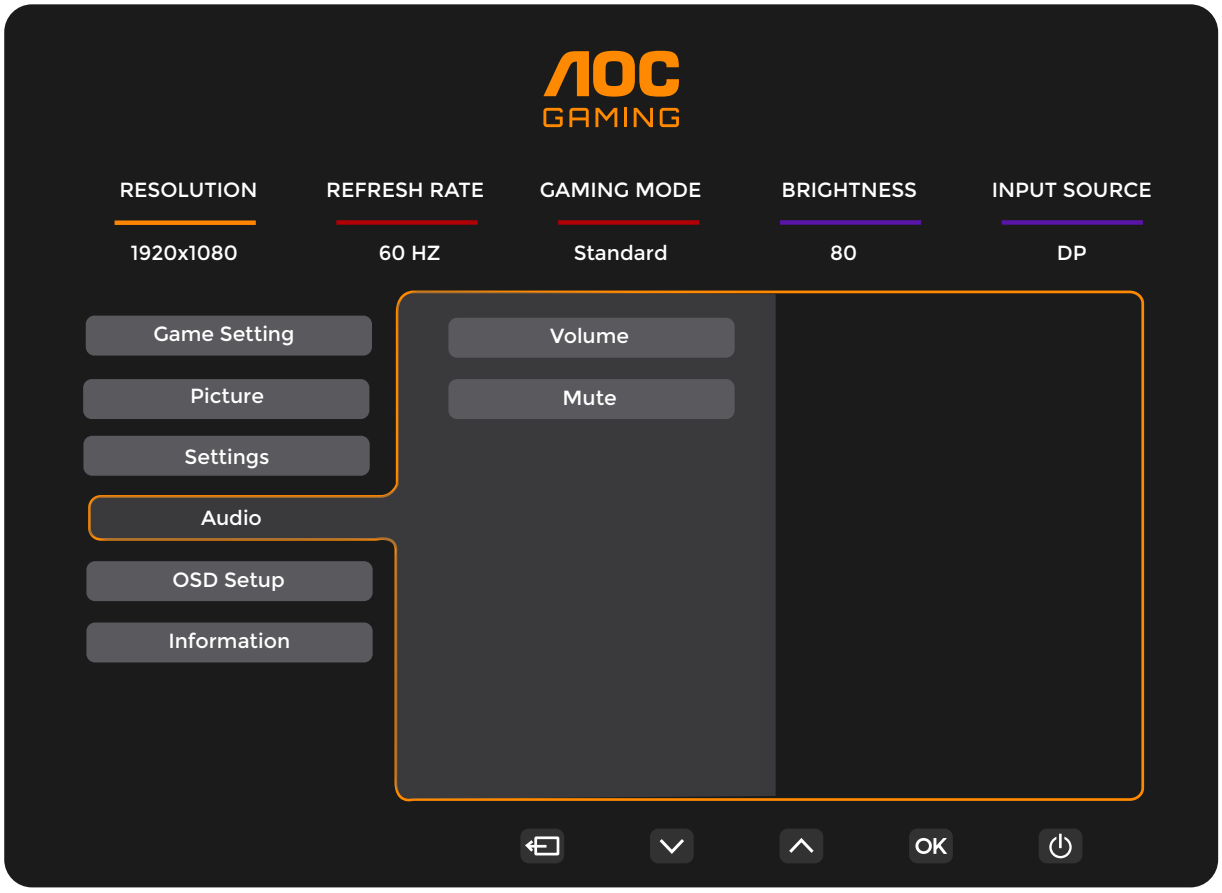

Volume	0-100	Volume Adjustment.
Mute	Off / On	Mute the volume.

OSD Setup

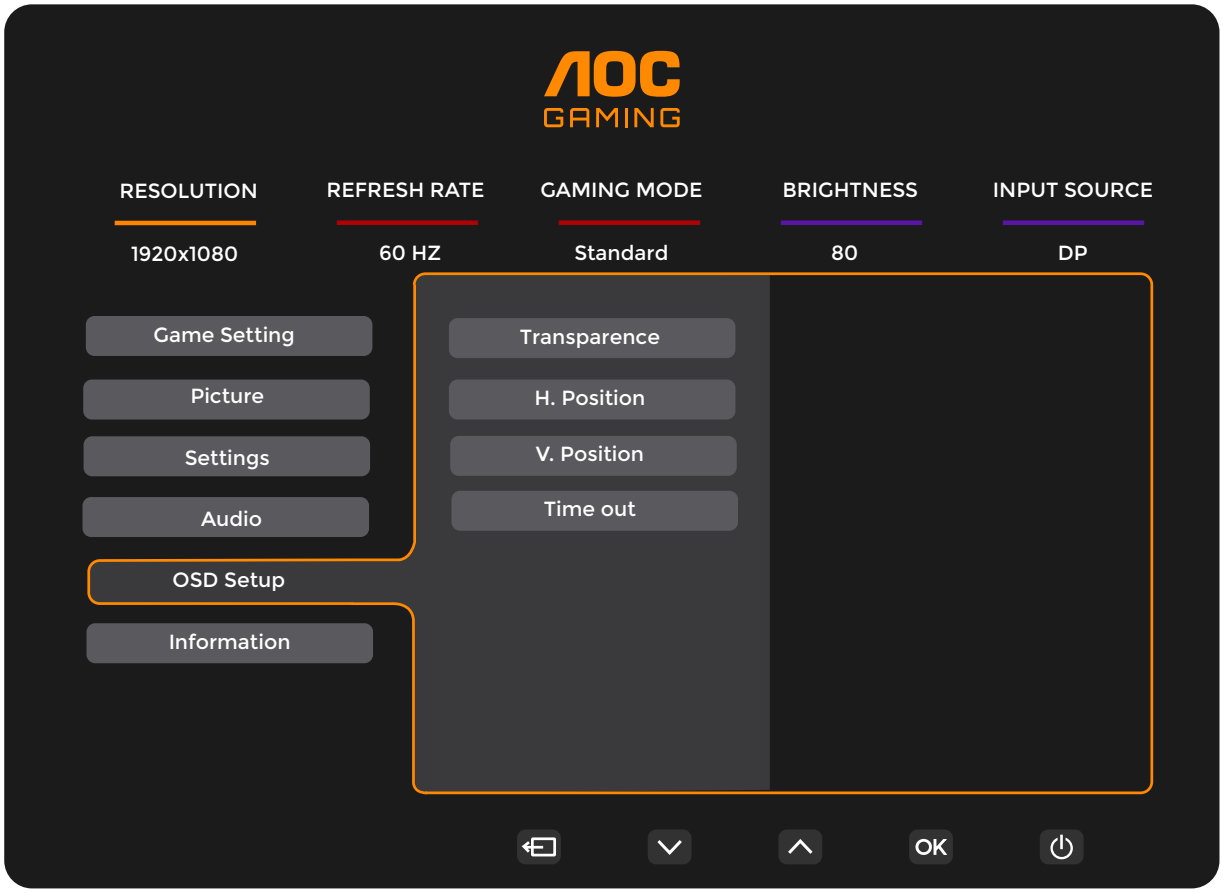

Transparence	0-100	Adjust the transparence of OSD.
H. Position	0-100	Adjust the horizontal position of OSD.
V. Position	0-100	Adjust the vertical position of OSD.
Timeout	5-120	Adjust the OSD Timeout.

Information

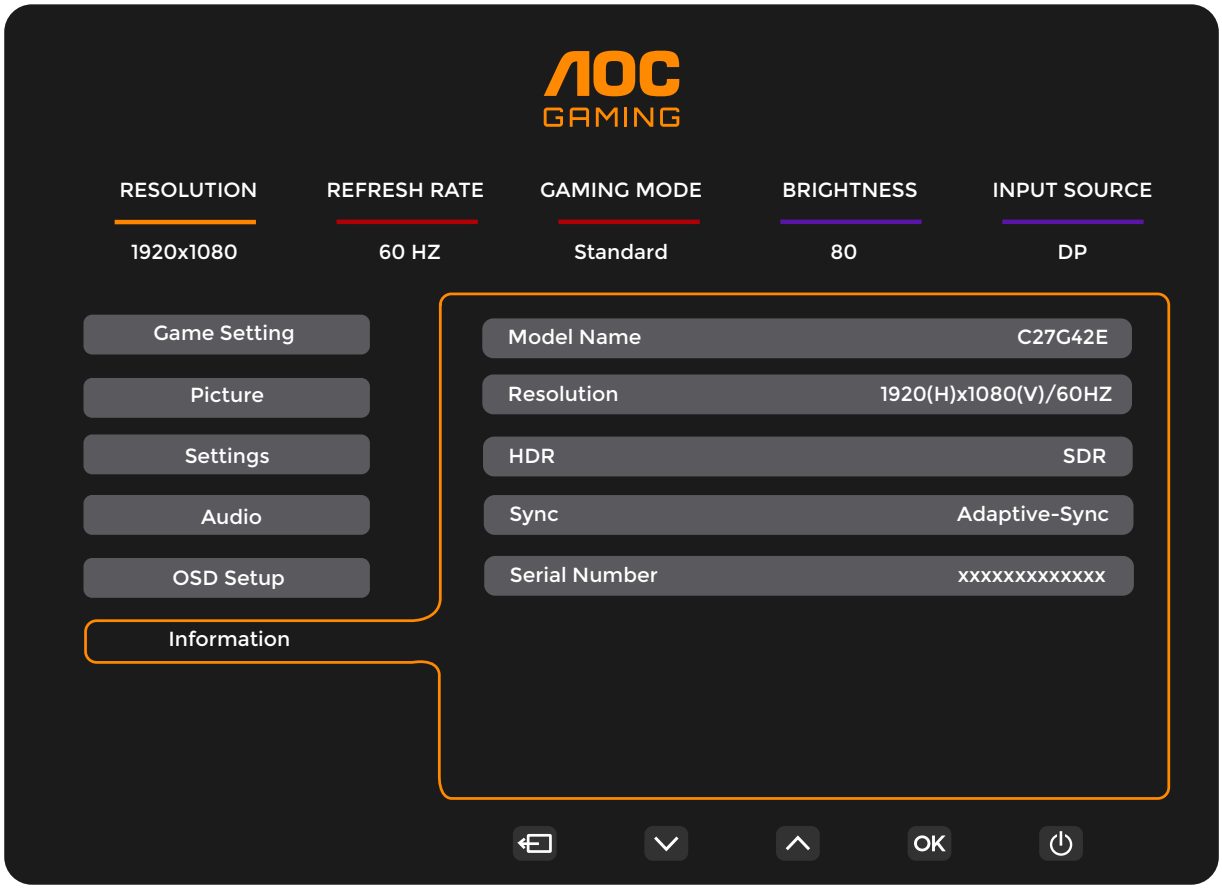

LED Indicator

Status	LED Color
Full Power Mode	White
Active-off Mode	Orange

Troubleshoot

Problem & Question	Possible Solutions
Power LED Is Not ON	Make sure the power button is ON and the Power Cord is properly connected to a grounded power outlet and to the monitor.
No image on the screen	• Is the power cord connected properly? Check the power cord connection and power supply. • Is the video cable connected correctly? (Connected using the HDMI cable) Check the HDMI cable connection. (Connected using the DisplayPort cable) Check the DisplayPort cable connection. * HDMI/DisplayPort input is not available on every model. • If the power is on, reboot the computer to see the initial screen (the login screen.) If the initial screen (the login screen) appears, boot the computer in the applicable mode (the safe mode for Windows 7/8/10) and then change the frequency of the video card. (Refer to the Setting the Optimal Resolution) If the initial screen (the login screen) does not appear, contact the Service Center or your dealer. • Can you see "Input Not Supported" on the screen? You can see this message when the signal from the video card exceeds the maximum resolution and frequency that the monitor can handle properly. Adjust the maximum resolution and frequency that the monitor can handle properly. • Make sure the AOC Monitor Drivers are installed.
Picture Is Fuzzy & Has Ghosting Shadowing Problem	Adjust the Contrast and Brightness Controls. Press hot-key (AUTO) to auto-adjust. Make sure you are not using an extension cable or switch box. We recommend plugging the monitor directly to the video card output connector on the back.
Picture Bounces, Flickers Or Wave Pattern Appears In The Picture	Move electrical devices that may cause electrical interference as far away from the monitor as possible. Use the maximum refresh rate your monitor is capable of at the resolution you are using.
Monitor Is Stuck In Active Off-Mode"	The Computer Power Switch should be in the ON position. The Computer Video Card should be snugly fitted in its slot. Make sure the monitor's video cable is properly connected to the computer. Inspect the monitor's video cable and make sure no pin is bent. Make sure your computer is operational by hitting the CAPS LOCK key on the keyboard while observing the CAPS LOCK LED. The LED should either turn ON or OFF after hitting the CAPS LOCK key.
Missing one of the primary colors (RED, GREEN, or BLUE)	Inspect the monitor's video cable and make sure that no pin is damaged. Make sure the monitor's video cable is properly connected to the computer.
Screen image is not centered or sized properly	Adjust H-Position and V-Position or press hot-key (AUTO).
Picture has color defects (white does not look white)	Adjust RGB color or select desired color temperature.
Horizontal or vertical disturbances on the screen	Use Windows 7/8/10/11 shut-down mode to adjust CLOCK and FOCUS. Press hot-key (AUTO) to auto-adjust.
Regulation & Service	Please refer to Regulation & Service Information which is in the CD manual or www.aoc.com (to find the model you purchase in your country and to find Regulation & Service Information in Support page.

Specification

General Specification

Panel	Model name	C27G42E	
	Driving system	TFT Color LCD	
	Viewable Image Size	68.6 cm diagonal	
	Pixel pitch	0.3114mm(H) x 0.3114mm(V)	
	Video	HDMI Interface & DisplayPort Interface	
	Display Color	16.7M Colors	
Others	Horizontal scan range	30k-200kHz	
	Horizontal scan Size(Maximum)	597.888mm	
	Vertical scan range	48-180Hz	
	Vertical Scan Size(Maximum)	336.312mm	
	Optimal preset resolution	1920X1080@60Hz	
	Max resolution	1920X1080@180HZ	
	Plug & Play	VESA DDC2B/CI	
	Connector Type	HDMIx2/DisplayPort/Earphone out	
	Power Source	100-240V~, 50/60Hz, 1.5A	
	Power Consumption	Typical(default brightness and contrast)	22W
		Max. (brightness = 100, contrast =100)	≤43W
		Standby Mode	≤0.3W
	Heat Dissipation	Normal Operation	75.08 BTU/hr (typ.)
		Sleep (Standby mode)	<1.02 BTU/hr
		Off mode	<1.02 BTU/hr
		Off mode(AC switch)	0 BTU/hr
Environmental	Temperature	Operating	0˚C~40˚C
		Non-Operating	-25˚C~55˚C
	Humidity	Operating	10%~85% (Non-Condensing)
		Non-Operating	5%~93% (Non-Condensing)
	Altitude	Operating	0m~5000m (0ft~16404ft)
		Non-Operating	0m~12192m (0ft~40000ft)

AOC Monitors Panel Pixel Defect Policy

AOC strives to deliver the highest quality products. We use some of the industry's most advanced manufacturing processes and practice stringent quality control. However, pixel or sub pixel defects on the Monitor panels used in the monitors are sometimes unavoidable.

No manufacturer can guarantee that all panels will be free from pixel defects, but AOC guarantees that any monitor with an unacceptable number of defects will be repaired or replaced under warranty. This notice explains the different types of pixel defects and defines acceptable defect levels for each type. In order to qualify for repair or replacement under warranty, the number of pixel defects on a Monitor panel must exceed these acceptable levels. For example, no more than 0.0004% of the sub pixels on a monitor may be defective.

Furthermore, AOC sets even higher quality standards for certain types or combinations of pixel defects that are more noticeable than others. This policy is valid worldwide.

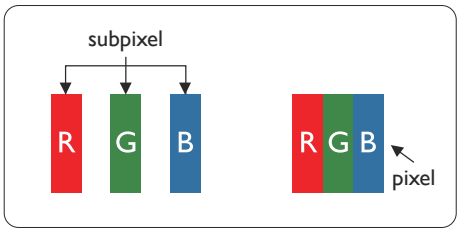

Pixels and Sub pixels

A pixel, or picture element, is composed of three sub pixels in the primary colors of red, green and blue. Many pixels together form an image. When all sub pixels of a pixel are lit, the three colored sub pixels together appear as a single white pixel. When all are dark, the three colored sub pixels together appear as a single black pixel. Other combinations of lit and dark sub pixels appear as single pixels of other colors.

Types of Pixel Defects

Pixel and sub pixel defects appear on the screen in different ways. There are two categories of pixel defects and several types of sub pixel defects within each category.

Bright Dot Defects

Bright dot defects appear as pixels or sub pixels that are always lit or 'on'. That is, a bright dot is a sub-pixel that stands out on the screen when the monitor displays a dark pattern. There are the types of bright dot defects.

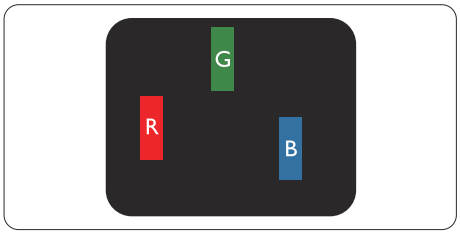

One lit red, green or blue sub pixel.

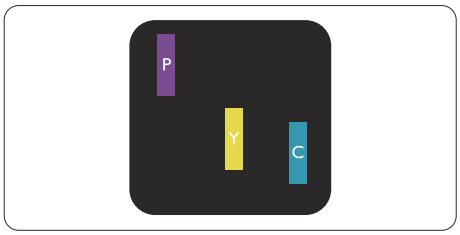

Two adjacent lit sub pixels:

- Red + Blue = Purple

- Red + Green = Yellow

- Green + Blue = Cyan (Light Blue)

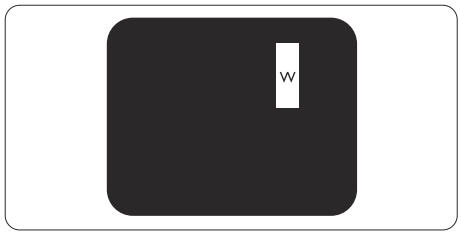

Three adjacent lit sub pixels (one white pixel).
Note
A red or blue bright dot must be more than 50 percent brighter than neighboring dots while a green bright dot is 30 percent brighter than neighboring dots.

Black Dot Defects

Black dot defects appear as pixels or sub pixels that are always dark or 'off'. That is, a dark dot is a sub-pixel that stands out on the screen when the monitor displays a light pattern. These are the types of black dot defects.

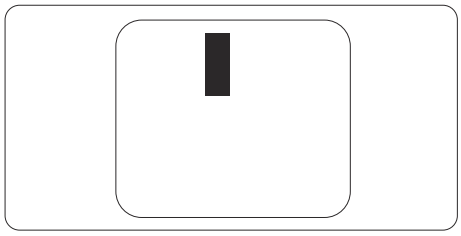

Proximity of Pixel Defects

Because pixel and sub pixels defects of the same type that are near to one another may be more noticeable, AOC also specifies tolerances for the proximity of pixel defects.

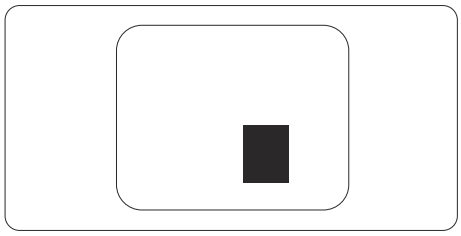

Pixel Defect Tolerances

In order to qualify for repair or replacement due to pixel defects during the warranty period, a Monitor panel in a AOC panel monitor must have pixel or sub pixel defects exceeding the tolerances listed in the web manual.

BRIGHT DOT DEFECTS	**ACCEPTABLE LEVEL**
1 lit subpixel	2
2 adjacent lit subpixels	1
3 adjacent lit subpixels (one white pixel)	0
Distance between two bright dot defects*	≥15mm
Total bright dot defects of all types	2
BLACK DOT DEFECTS	**ACCEPTABLE LEVEL**
1 dark subpixel	5 or fewer
2 adjacent dark subpixels	2 or fewer
3 adjacent dark subpixels	≤0
Distance between two black dot defects*	≥15mm
Total black dot defects of all types	5 or fewer
TOTAL DOT DEFECTS	**ACCEPTABLE LEVEL**
Total bright or black dot defects of all types	5 or fewer

Note

*: 1 or 2 adjacent sub pixel defects = 1 dot defect.

Preset Display Modes

STANDARD	RESOLUTION(±1Hz)	HORIZONTAL FREQUENCY(KHz)	VERTICAL FREQUENCY(Hz)
VGA	640x480@60Hz	31.469	59.94
	640x480@67Hz	35	66.667
	640x480@72Hz	37.861	72.809
	640x480@75Hz	37.5	75
	640x480@100Hz	51.08	99.769
	640x480@120Hz	61.91	119.518
SD	720x576@50Hz	31.25	50
SVGA	800x600@56Hz	35.156	56.25
	800x600@60Hz	37.879	60.317
	800x600@72Hz	48.077	72.188
	800x600@75Hz	46.875	75
	800x600@100Hz	62.76	99.778
	800x600@120Hz	76.302	119.972
XGA	1024x768@60Hz	48.363	60.004
	1024x768@70Hz	56.476	70.069
	1024x768@75Hz	60.023	75.029
	1024x768@100Hz	80.448	99.811
	1024x768@120Hz	97.551	119.989
SXGA	1280x1024@60Hz	63.981	60.02
	1280x1024@75Hz	79.976	75.025
FHD	1920x1080@60Hz	67.5	60
	1920x1080@120Hz	137.283	120.003
FHD(DisplayPort)	1920x1080@144Hz	159.844	144.00
FHD	1920x1080@180Hz	199.803	180.003
MAC MODES			
SVGA	832x624@75Hz	49.725	74.551
DOS	720x400@70Hz	31.469	70.087

Note: According to the VESA standard, there may be a certain error (+/-1Hz) when calculating the refresh rate (field frequency) of different operating systems and graphics cards. In order to improve compatibility, the nominal refresh rate of this product has been rounded off. Please refer to the actual product.

Pin Assignments

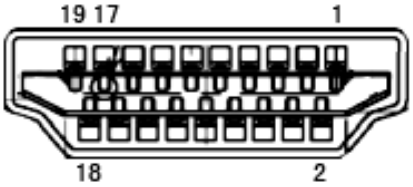

19-Pin Color Display Signal Cable

Pin No.	Signal Name	Pin No.	Signal Name	Pin No.	Signal Name
1.	TMDS Data 2+	9.	TMDS Data 0-	17.	DDC/CEC Ground
2.	TMDS Data 2 Shield	10.	TMDS Clock +	18.	+5V Power
3.	TMDS Data 2-	11.	TMDS Clock Shield	19.	Hot Plug Detect
4.	TMDS Data 1+	12.	TMDS Clock-		
5.	TMDS Data 1Shield	13.	CEC		
6.	TMDS Data 1-	14.	Reserved (N.C. on device)		
7.	TMDS Data 0+	15.	SCL		
8.	TMDS Data 0 Shield	16.	SDA		

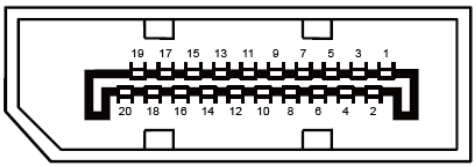

20-Pin Color Display Signal Cable

Pin No.	Signal Name	Pin No.	Signal Name
1	ML_Lane 3 (n)	11	GND
2	GND	12	ML_Lane 0 (p)
3	ML_Lane 3 (p)	13	CONFIG1
4	ML_Lane 2 (n)	14	CONFIG2
5	GND	15	AUX_CH(p)
6	ML_Lane 2 (p)	16	GND
7	ML_Lane 1 (n)	17	AUX_CH(n)
8	GND	18	Hot Plug Detect
9	ML_Lane 1 (p)	19	Return DP_PWR
10	ML_Lane 0 (n)	20	DP_PWR

Plug and Play

Plug & Play DDC2B Feature

This monitor is equipped with VESA DDC2B capabilities according to the VESA DDC STANDARD. It allows the monitor to inform the host system of its identity and, depending on the level of DDC used, communicate additional information about its display capabilities.

The DDC2B is a bi-directional data channel based on the I2C protocol. The host can request EDID information over the DDC2B channel.

HDMI®
HIGH-DEFINITION MULTIMEDIA INTERFACE