NetShelter™ SX Racks

2nd Generation

Installation and Customization

Release date: 4/2024

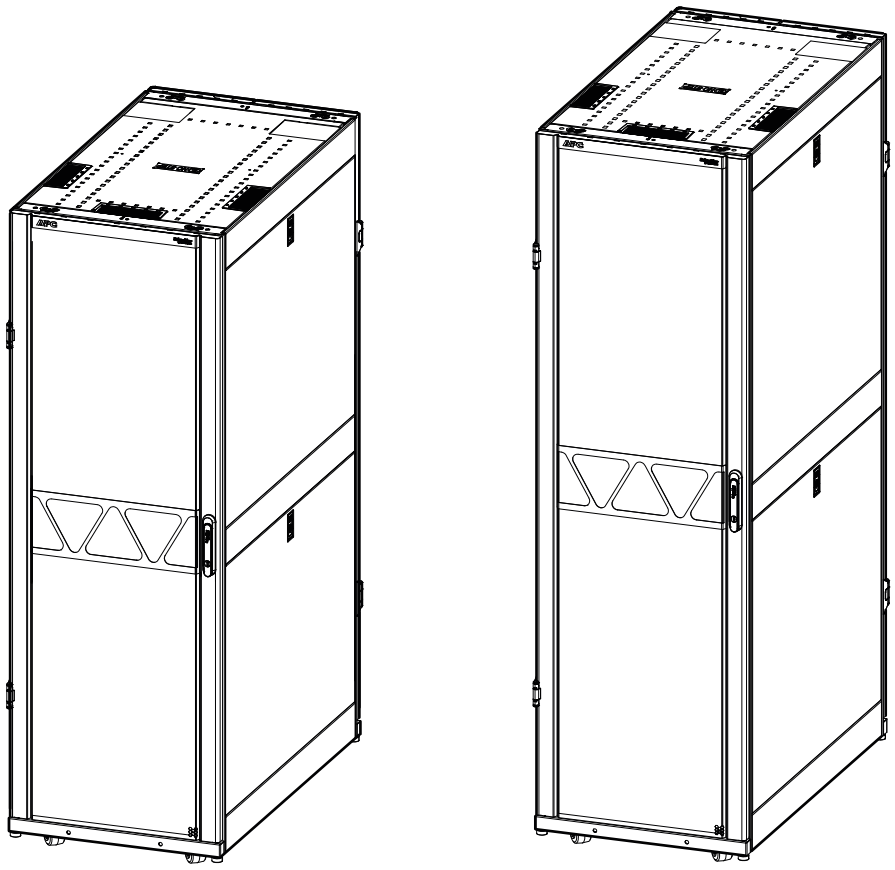

www.apc.com

Legal Information

The Schneider Electric brand and any trademarks of Schneider Electric SE and its subsidiaries referred to in this guide are the property of Schneider Electric SE or its subsidiaries. All other brands may be trademarks of their respective owners.

This guide and its content are protected under applicable copyright laws and furnished for informational use only. No part of this guide may be reproduced or transmitted in any form or by any means (electronic, mechanical, photocopying, recording, or otherwise), for any purpose, without the prior written permission of Schneider Electric.

Schneider Electric does not grant any right or license for commercial use of the guide or its content, except for a non-exclusive and personal license to consult it on an “as is” basis. Schneider Electric products and equipment should be installed, operated, serviced, and maintained only by qualified personnel.

As standards, specifications, and designs change from time to time, information contained in this guide may be subject to change without notice.

To the extent permitted by applicable law, no responsibility or liability is assumed by Schneider Electric and its subsidiaries for any errors or omissions in the informational content of this material or consequences arising out of or resulting from the use of the information contained herein.

Contents

Introduction 1
Features 1
Safety 2
Qualified Personnel 2
Rack Safety 3
Labels 3
Component Identification 4
Rack 4
Hardware Bag Contents 5
Hardware 5
Tools Provided 5
Tools Required (Not Provided) 5
Rack Installation 6
Move the Rack 6
Move the Rack on its Pallet 6
Move the Rack on its Casters 6
Lift the Rack 6
Level the Rack 7
Level an Empty Rack 7
Level a Loaded Rack 7
Join the Racks 8
Ground the Rack 9
Secure the Rack 10
Side Panels 11
Removal 11
Installation 11
Roof 12
Removal 12
Installation 12
Doors 13
Door Removal 13
Door Installation 14
Rack Customization 15
Reverse the Front Door 15
Remove the Front Door 15
Reverse the Door Handle 16
Install the Door 20
Adjust the Vertical Mounting Rails 21
Position the Vertical Mounting Rails 21
Vertical Mounting Rail Adjustment 22
Cable Cutout Covers 25

Cable Management 26
Accessory Channel 26
Install Your Equipment 27
Cage Nuts 27
Specifications 28
Five-Year Factory Warranty 29
Terms of warranty 29
Non-transferable warranty 29
Exclusions 29
Warranty claims 29

Introduction

NetShelter™ SX 2nd Generation Racks are high-quality racks for storage of industry-standard (EIA/ECA-310), 19 in. (483 mm) rack-mount hardware, which includes servers and voice, data, networking, internetworking, and power protection equipment.

This manual describes the general installation and the customization of the NetShelter SX 2nd Generation Racks.

NetShelter SX 2nd Generation Racks are available in 600 mm (23.6 in), 750 mm (29.5 in), and 800 mm (31.5 in) widths.

Optional vertical mounting rails are available for the 750 mm (29.5 in) and 800 mm (31.5 in) racks to accommodate 23 in. EIA / ECA telecommunications equipment.

Features

3-Point locking system for higher security

80% Door Perforation for improved air flow maximizing cooling efficiency

Updated hinges provide door opening of 180 degrees

Safety

Read the instructions carefully to become familiar with the equipment before trying to install, operate, service or maintain it. The following messages may appear throughout this manual or on the equipment to warn of potential hazards or to call attention to information that clarifies or simplifies a procedure.

The addition of this symbol to a Danger or Warning safety label indicates that an electrical hazard exists which will result in personal injury if the instructions are not followed.

This is the safety alert symbol. It is used to alert you to potential personal injury hazards. Obey all safety messages that follow this symbol to avoid possible injury or death.

⚠ DANGER

DANGER indicates a hazardous situation which, if not avoided, **will result in** death or serious injury.

Failure to follow these instructions will result in death or serious injury.

⚠ WARNING

WARNING indicates a hazardous situation which, if not avoided, **could result in** death or serious injury.

Failure to follow these instructions can result in death, serious injury or equipment damage.

⚠ CAUTION

CAUTION indicates a hazardous situation which, if not avoided, **could result in** minor or moderate injury.

Failure to follow these instructions can result in injury or equipment damage.

NOTICE

NOTICE is used to address practices not related to physical injury. The safety alert symbol is not used with this type of safety message.

Failure to follow these instructions can result in equipment damage.

Qualified Personnel

Electrical equipment should be installed, operated, serviced, and maintained only by qualified personnel. No responsibility is assumed by APC for any consequences arising out of the use of this material.

A qualified person is one who has skills and knowledge related to the construction, installation, and operation of electrical equipment and has received safety training to recognize and avoid the hazards involved.

Rack Safety

This manual contains important instructions that must be followed during the installation and customization of the cabinet.

⚠⚠ DANGER

HAZARD OF ELECTRIC SHOCK

- The rack must be connected to the building Common Bonding Network (CBN).
- Ground wires on the doors must be connected while the doors are installed.

Failure to follow these instructions will result in death or serious injury.

⚠ WARNING

TIP/HEAVY EQUIPMENT HAZARD

- This rack is easily tipped. Use extreme caution when unpacking or moving.
- Use at least two people to unpack and move the rack.
- Before moving the rack on its casters, load 158 kg (350 lb) of equipment into the bottom of the rack for extra stability.
- When moving the rack on its casters, make sure the leveling feet are in the fully raised position and push the rack from the front or rear. Never push the rack from the sides.

Failure to follow these instructions can result in death, serious injury, or equipment damage.

⚠ WARNING

FALLING EQUIPMENT HAZARD

- Remove all equipment installed on the vertical mounting rails before performing any adjustments.
- Do NOT install cage nuts vertically, with the tabs engaging the top and bottom of the square hole.
- Use at least two people to install, remove, or reverse the doors.

Failure to follow these instructions can result in death, serious injury, or equipment damage.

NOTICE

Caster Loads: The rack can be moved on its casters with up to 1020 kg (2250 lb) of equipment installed (the Dynamic Load). Once in place, lower the leveling feet. With the leveling feet lowered, the rack can be loaded with up to 1818 kg (4000 lb) of equipment (the Static Load).

Labels

Additional safety information is affixed to the rack.

Label ❶: Generic Tip Hazard Warning.

Label ❷: Dynamic Load, the maximum load of the rack while moving on its casters, is 1020 kg (2250 lb).
The Static Load, the maximum load of the rack while on its leveling feet, is 1818 kg (4000 lb).

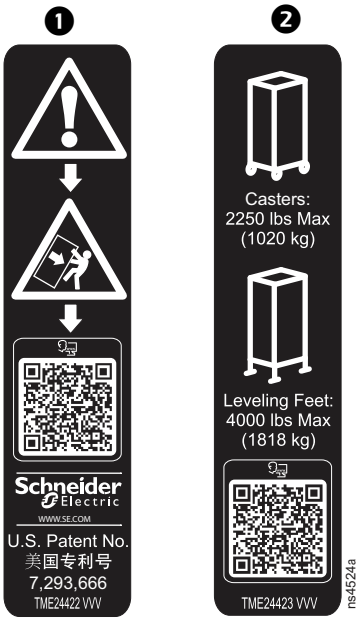

Component Identification

Rack

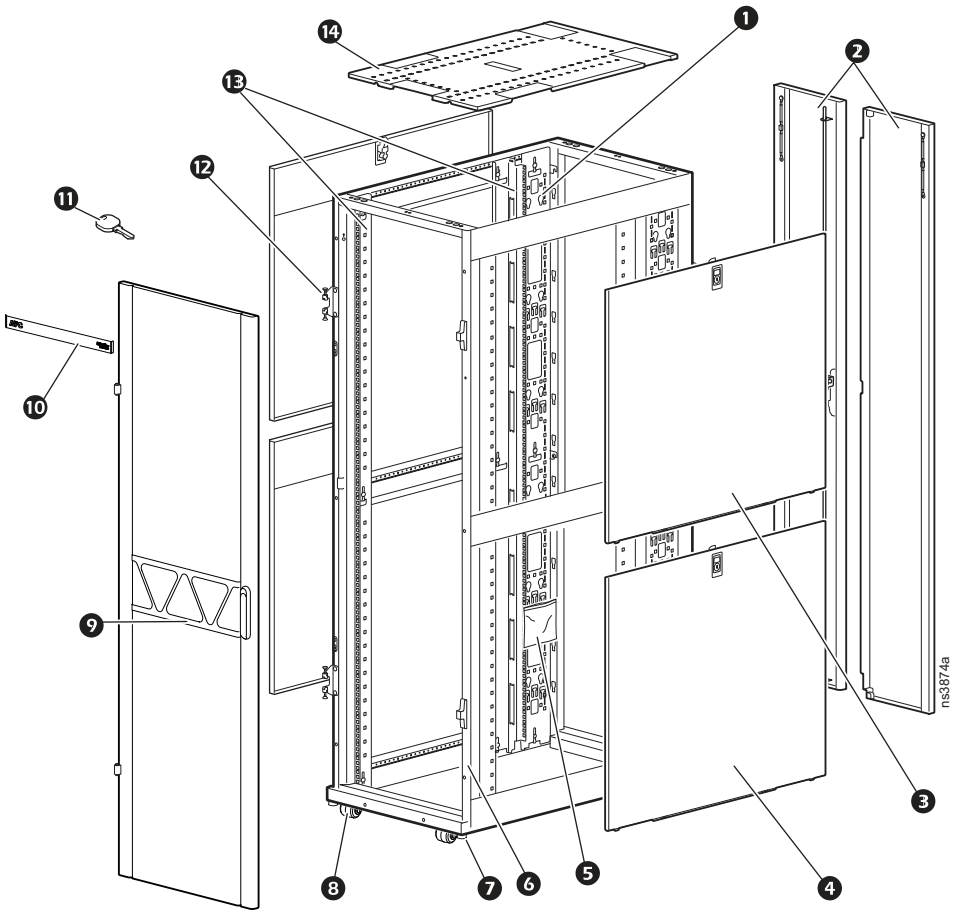

❶	Adjustable vertical 0U accessory channel*	❽	Caster
❷	Rear doors	❾	Front door
❸	Top side panel with lock	❿	Logo badge
❹	Bottom side panel with lock	⓫	Key for doors and side panels
❺	Hardware bag	⓬	Door hinge
❻	Rack frame	⓭	Vertical mounting rails
❼	Leveling feet	⓮	Roof

* 1200 mm (47.24 in) deep racks include four vertical 0U Accessory Channels.

Not shown: Cable Cutouts, 750 mm (29.5 in) and 800 mm (31.5 in) wide models only. See “Cable Cutout Covers” on page 25.

Hardware Bag Contents

Hardware

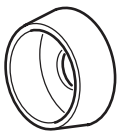

Plastic cup washer (60)

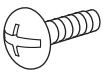

M6 x 16 Phillips slot screw (60)

M5 x 12 Flat head Phillips screw (4)

Cage nut (60)

7mm (0.28 in) hole plug (4)

Tools Provided

Torx® T30 / #2 Phillips tool

Cage nut tool (1)

Tools Required (Not Provided)

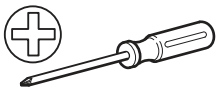

Phillips screwdriver

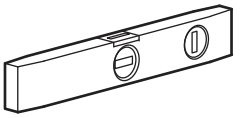

Level

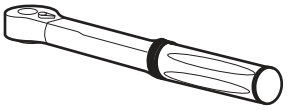

Torque wrench

13-mm, open-ended wrench

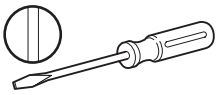

Flat tipped screwdriver

Rack Installation

Move the Rack

⚠ WARNING

TIP HAZARD

- This rack is easily tipped. Use extreme caution when unpacking or moving.
- At least two people are required to unpack and move the rack.
- Before moving the rack on its casters, load 158 kg (350 lb) of equipment into the bottom of the rack for extra stability.
- Make sure the leveling feet are up and push the rack only from the front or rear when moving the rack on its casters. Never push the rack from the sides.

Failure to follow these instructions can result in death, serious injury, or equipment damage.

Move the Rack on its Pallet

The rack can be moved with a forklift or pallet jack only if the rack is still secured to its pallet.

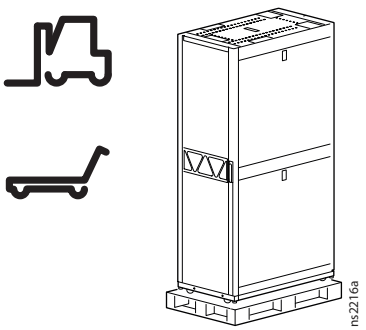

Move the Rack on its Casters

The rack can be rolled on its casters to move it with at least two people pushing from the front or rear. Follow all Safety Information when moving the rack in this manner. The rack must have at least 158 kg (350 lb) of weight in the bottom of the rack for stability. The rack cannot weigh more than the listed dynamic load noted on the label, 1020 kg (2250 lbs), when moved in this manner.

Lift the Rack

Eye bolts: The rack, with up to 567 kg (1,250 lb) of equipment installed, can be lifted using eye bolts (not provided). Use M10 eye bolts with a shoulder rated for 181 kg (400 lb).

NOTE: Use appropriate lifting hardware to ensure a straight-line pull on the lifting eye bolts.

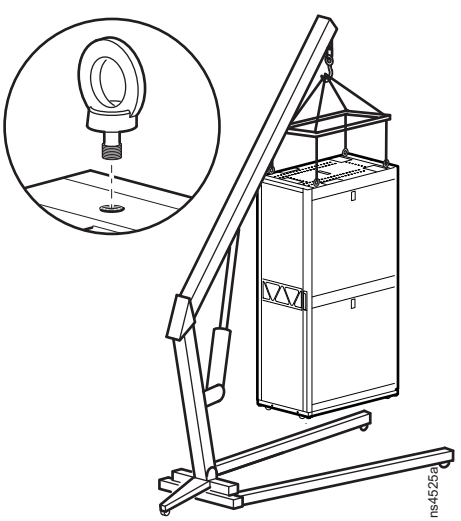

Level the Rack

The leveling feet at the corners of the rack provide a stable base if the floor is uneven, but they cannot compensate for a badly sloped surface.

Level an Empty Rack

This method works best with an empty, or near empty, rack.

Ensure the rack is in its intended location. Remove the front and rear doors. See “Door Removal” on page 13 for instructions.

NOTE: Be sure to disconnect the ground wires and any other wire connections that may interfere with the removal of the doors.

1. Insert a Phillips head screwdriver into the screw above the leveling foot. Turn the screw clockwise to extend the leveling foot until it makes firm contact with the floor.
2. Use a level while adjusting the feet until the rack is level and plumb.
3. Install the doors. See “Door Installation” on page 14 for instructions.

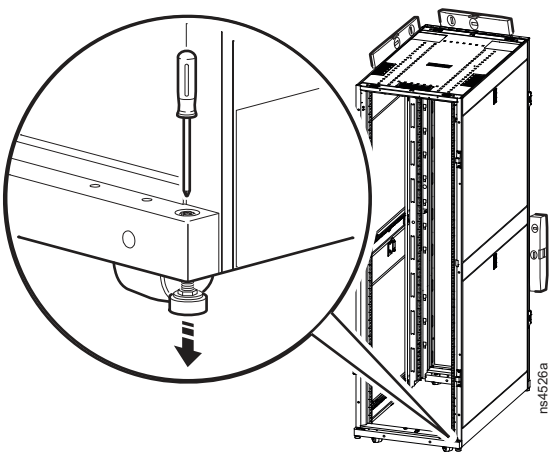

Level a Loaded Rack

This method works best if the rack is loaded with equipment.

NOTE: Door removal is not required if using this method.

1. Use a 13-mm, open-ended wrench to lower the leveling feet. Place the wrench on the nut of the leveling foot to lower or raise the foot.
2. Use a level while adjusting the feet. Adjust each leveling foot until the rack is level and plumb.

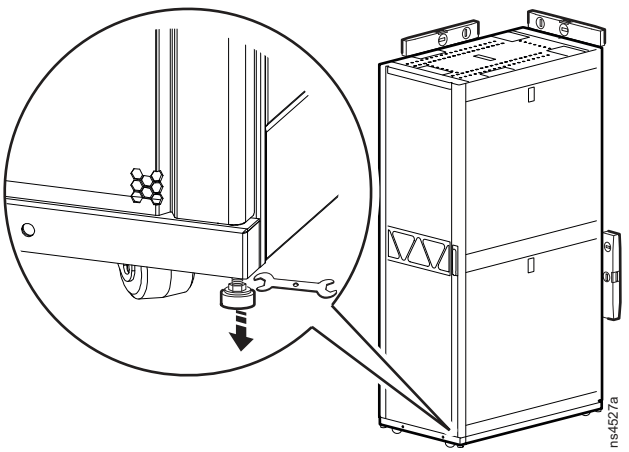

Join the Racks

Join two or more racks with the provided brackets to assist in alignment and increase stability. Racks can be joined with or without the side panels installed.

⚠ WARNING
TIP HAZARD Joining racks provides limited stability to the racks. Secure the rack to the floor before installing equipment. **Failure to follow these instructions can result in death, serious injury, or equipment damage.**

1. Make sure that the leveling feet are down and the racks are level. See “Level the Rack” on page 7.
2. Remove the front and rear doors. See “Door Removal” on page 13 for instructions.
   NOTE: Be sure to disconnect the ground wires and any other wire connections that may interfere with the removal of the doors.
3. Locate the joining brackets. There are two brackets on the front and two brackets on the rear of each rack. Choose between 600 mm (23.6 in) centers or 609.6 mm (24 in) centers as shown in the illustration.

   NOTE: If you choose to join the racks using the 24 in. (609.6 mm) holes in the mounting brackets, there will be a small space between the racks which can be filled using the NetShelter SX Baying Trim kit (AR7600), not provided.

4. Align and join the racks using one M5 x 12 countersunk Phillips screw (provided in the hardware bag) per bracket. Insert a screw into the designated hole on each bracket. Use the Phillips head end of the provided tool or a Phillips head screwdriver to tighten the screws.
5. Install the doors. See “Door Installation” on page 14 for instructions.
   NOTE: Be sure to connect the ground wires and any other wire connections that were disconnected when the doors were removed.

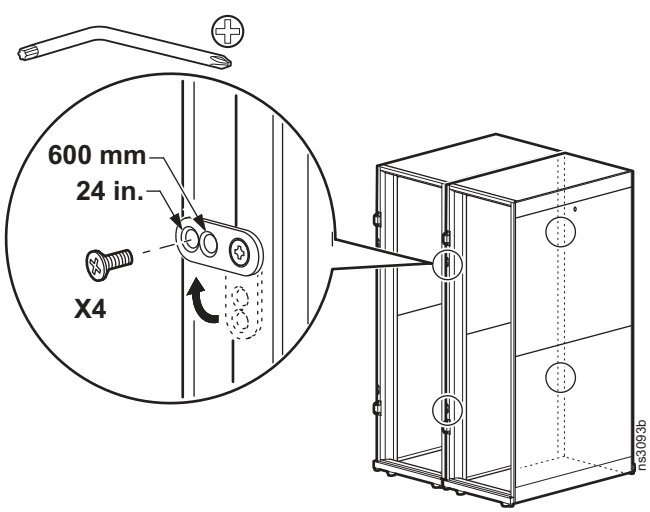

Ground the Rack

⚠⚠ DANGER

HAZARD OF ELECTRIC SHOCK

- The rack must be connected to the building Common Bonding Network (CBN).
- Ground wires on the doors must be connected while the doors are installed.

Failure to follow these instructions will result in death or serious injury.

Each rack should be bonded directly to a common ground using one of the designated grounding locations (two M6 threaded inserts) at the bottom of the rack.

- Use a Common Bonding Network Jumper kit (for example, Listed [KDER] Panduit® RGCBNJ660PY or equivalent).
- Use paint-piercing washers between the ground terminal and the rack frame, or remove the paint on the frame under the ground terminals, per NEC NFPA 70 Article 250.12.
- Torque the screws to 6.9 N•m (60 lb-in).
- Do not ground one rack to another rack in a cascading style. Ground each rack directly to the building ground.

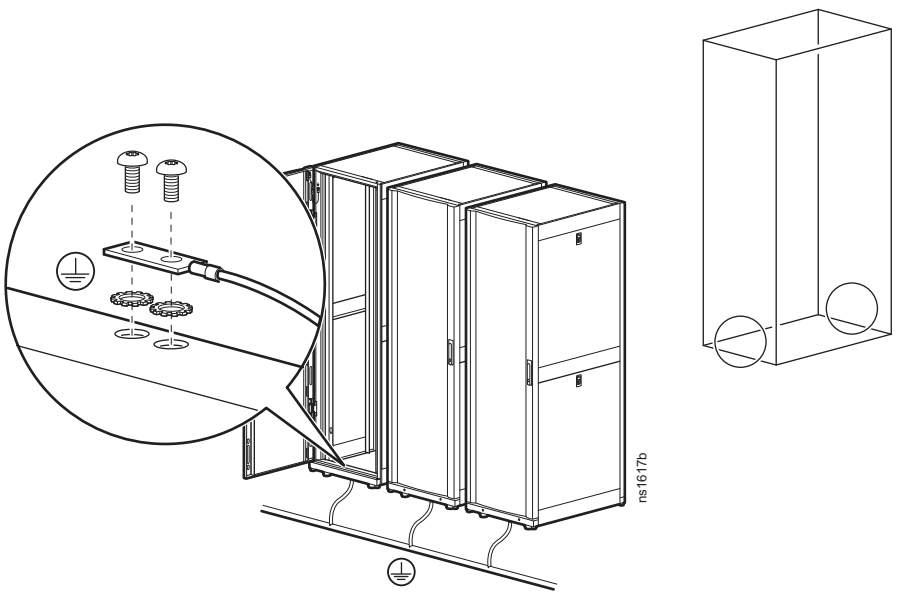

Bonding Locations on the rack

NOTE: If needed, additional functional grounding points are available at the top of the rack. Do not connect the building CBN to these functional grounding points.

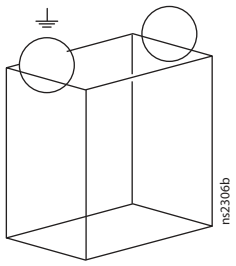

NOTE: The doors, side panels, and roof of the rack are grounded to the rack frame. The doors are grounded with quick-disconnect cables. The roof and side panels are inherently grounded through spring fingers.

Secure the Rack

⚠ WARNING
TIP HAZARD Secure the rack to the floor before installing equipment. **Failure to follow these instructions can result in death, serious injury, or equipment damage.**

The rack can be bolted to the floor internally or externally, as shown below. See **www.apc.com** for a complete list of available stabilization options.

NOTE: Only use the stabilization accessories with the leveling feet lowered.

Accessory	Part Number	Description
Pallet/bolt-down brackets	Provided	Attaches to the rack and floor, internally or externally, to provide additional stability without blocking cable access. With appropriate mounting hardware, it meets the requirements for IBC low and moderate seismic regions. 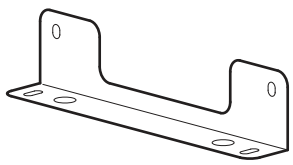
NetShelter SX stabilizer plate	Option (AR7700)	Attaches externally to the rack and floor to provide additional stability. 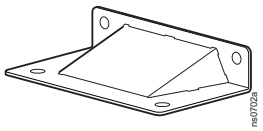
Bolt-down kit	Option (AR7701)	Attaches to the rack and floor, internally or externally, to provide additional stability without blocking cable access. With appropriate mounting hardware, it meets the requirements for IBC low and moderate seismic regions. 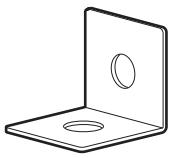
NetShelter SX high-seismic region and OSHPD bolt-down kit	Option (AR7701A-S)	Attaches to rack and floor, internally and externally, to provide additional stability without blocking cable access. With appropriate mounting hardware, it meets OSHPD* and IBC high seismic region requirements. **NOTE:** Not a substitute for racks designed to meet OSHPD* and IBC high seismic region requirements. 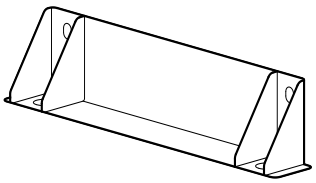

* OSHPD approved per OPM-0255-13

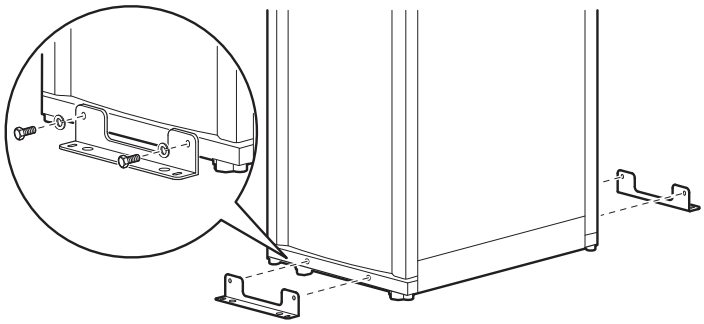

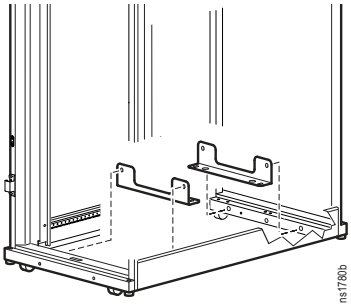

Side Panels

⚠ CAUTION
HEAVY EQUIPMENT HAZARD The side panels are heavy. It is recommended that at least two people perform the removal and installation tasks. **Failure to follow these instructions can result in death, serious injury, or equipment damage.**

Removal

1. Unlock the side panel with the provided key.
2. Lift the latch and open the side panel.
3. Tilt the side panel out.
4. Lift up the side panel to remove it from the mounting channel.

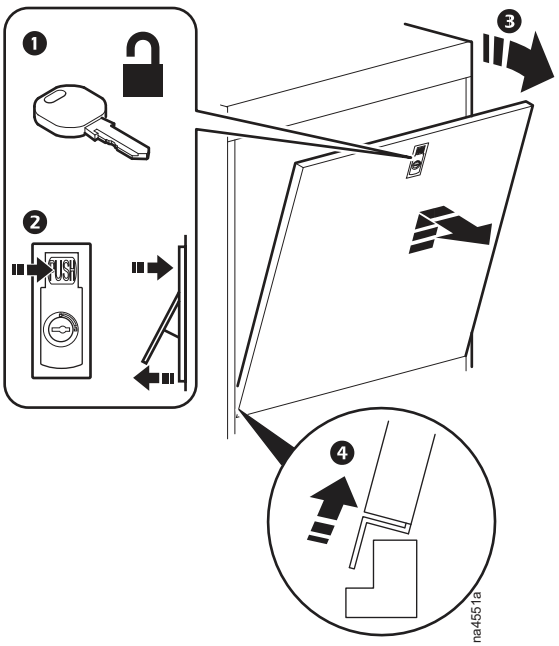

Installation

Reverse the removal task to install the side panel.

1. Lift the side panel up and place it into the channel.
2. Tilt the panel into the rack frame.
3. Ensure the latch is secured to hold the panel in position.
4. Lock the side panel with the key.

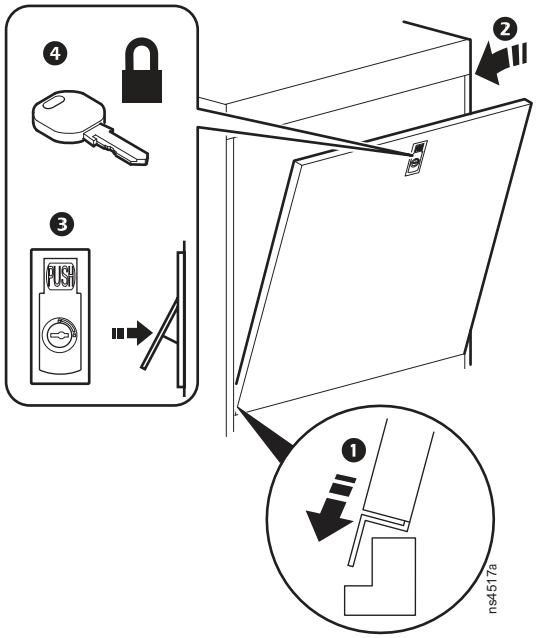

Roof

⚠ CAUTION
HEAVY EQUIPMENT HAZARD The roof heavy. It is recommended that at least two people perform the removal and installation tasks. **Failure to follow these instructions can result in death, serious injury, or equipment damage.**

Removal

1. From inside the rack, pull the two (2) spring-loaded plungers to release the roof from the rear frame.
2. Push the rear of the roof up from inside of the rack.
3. From outside the rack, pull the roof towards the rear of the rack to release the tabs from the front of the frame.
4. The roof can now be lifted away from the rack.

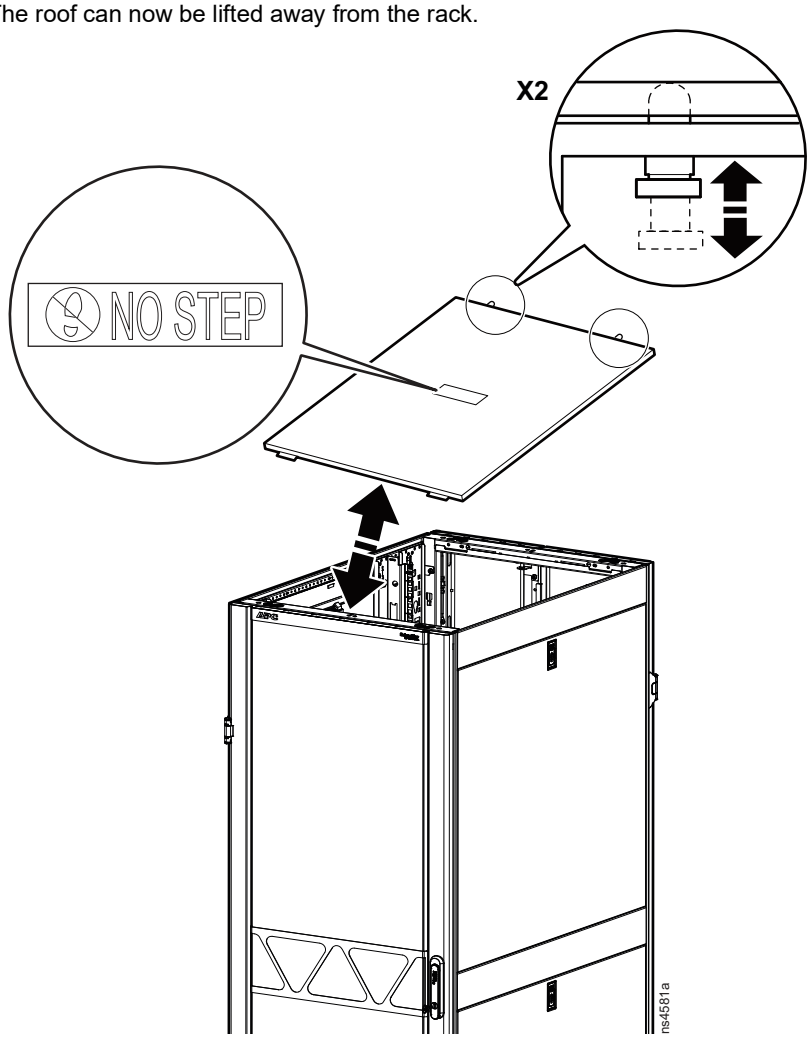

Installation

1. One person lowers the roof to the top of the rack while another person guides the tabs at the front of the roof into the slots at the front of the rack frame.
2. When the tabs are in place, lower the rear of the roof.
3. The person inside the rack can now pull the spring-loaded plungers out and finish lowering the roof into place.
4. Release the spring-loaded plungers. The plungers, when released, will set into the holes in the frame, securing the roof.

Doors

⚠ CAUTION
HEAVY EQUIPMENT HAZARD The doors heavy. It is recommended that at least two people perform the removal and installation tasks. **Failure to follow these instructions can result in death, serious injury, or equipment damage.**

Door Removal

The front and rear doors are removed using the same steps.

1. Unlock the door handle and open the door.
2. Disconnect the ground wire and any other wire connections that may interfere with the removal of the doors.
   NOTE: There is a ground wire on each door.

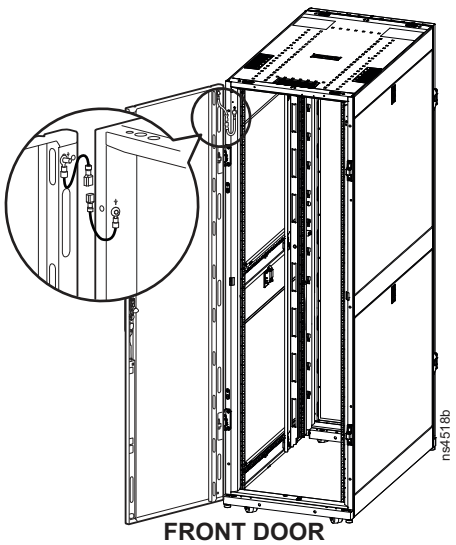

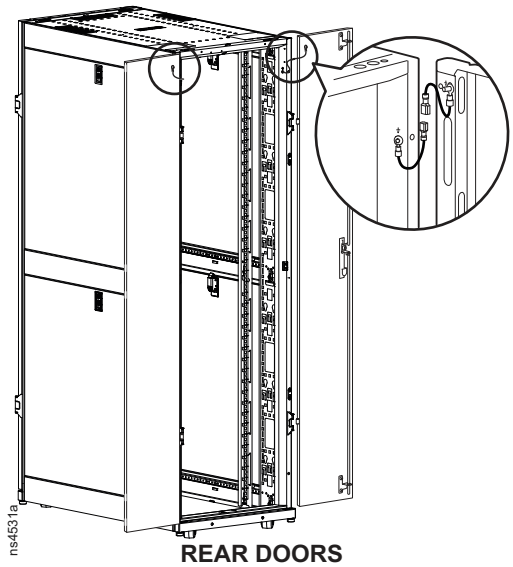

3. Pull the top hinge pin up and the bottom hinge pin down to release the door from the hinge. When both hinges have been opened, the door can be removed by pulling it from the hinges. Keep the door at a 90° angle to the rack while removing to ensure no interference with the hinge pins.

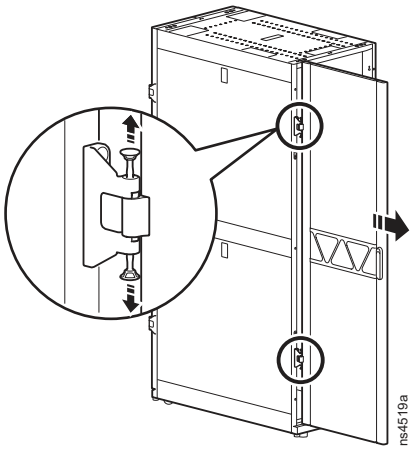

Door Installation

The front and rear doors are installed using the same procedure.

⚠⚠ DANGER

HAZARD OF ELECTRIC SHOCK

Ground wires on the doors must be connected while the doors are installed.

Failure to follow these instructions will result in death or serious injury.

1. Start with the hinge pins in the open position. Pull the top hinge pin up and the bottom hinge pin down.
   Insert the door at a 90° angle to the rack and into position with the opened hinge pins.

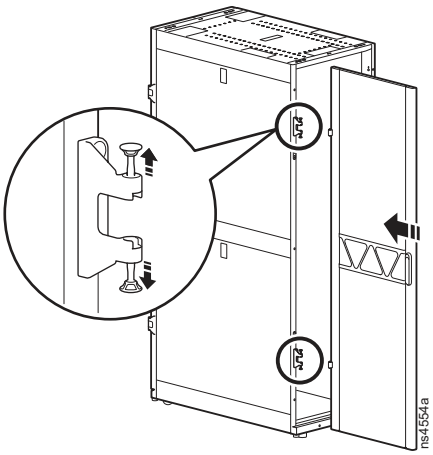

2. When the door is positioned between both opened hinges, close the hinge pins by pushing the top hinge pin down and the bottom hinge pin up on both hinge assemblies.

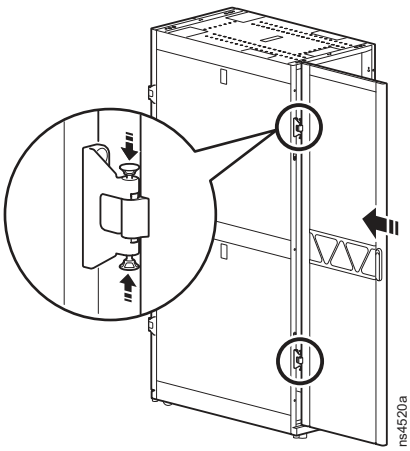

3. Connect the ground wire on the door. Connect any other wires or cables that may have been disconnected when the door was removed.
   Close and lock the door.

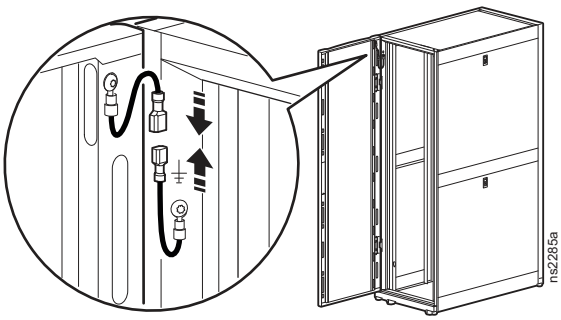

Rack Customization

Reverse the Front Door

The front door can be reversed so that the door opens from the opposite side. This procedure assumes that initially, when facing the rack, the hinges are on the left and the door is opening from the right side.

Remove the Front Door

⚠ CAUTION
HEAVY EQUIPMENT HAZARD The doors heavy. It is recommended that at least two people perform the removal and installation tasks. **Failure to follow these instructions can result in death, serious injury, or equipment damage.**

1. Remove the screws securing the ground wire to the door and frame.

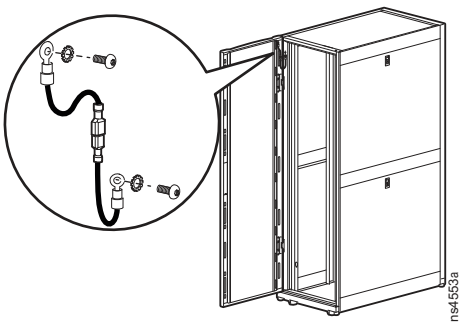

2. Remove the door. Follow the instructions for removing the front door on page 13.

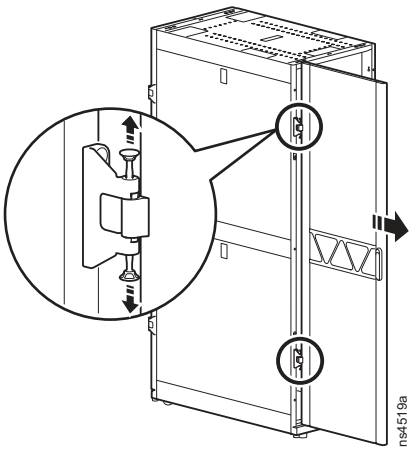

3. Lay the door on a flat surface.

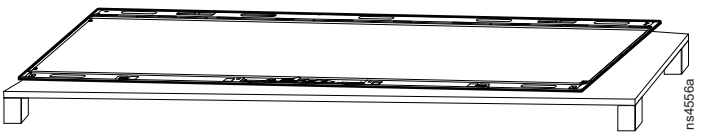

Reverse the Door Handle

NOTE: The door has been removed and placed on a flat surface.

1. Remove the T30 screw securing the cam to the locking mechanism.

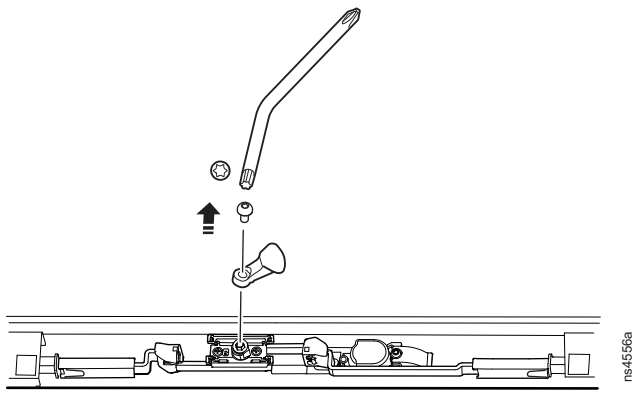

2. Turn the handle to the open position.

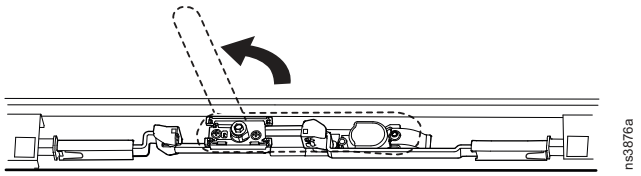

3. Use a flat-tipped screwdriver to release the locking mechanism from the plastic retaining brackets. Pull the retaining brackets from the latching ends of the locking mechanism.

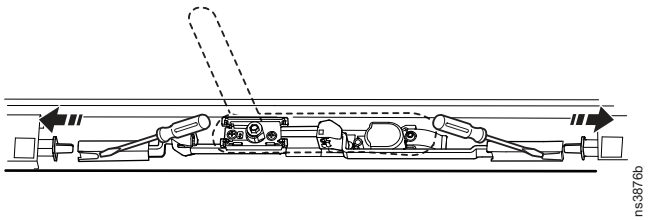

4. Remove the Phillips head screws then, separate the handle assembly and locking mechanism from the door.

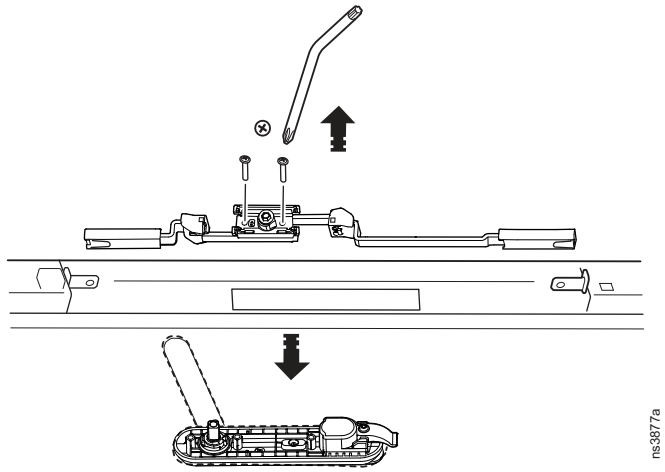

5. Rotate the locking mechanism assembly 180° as shown in the illustration.

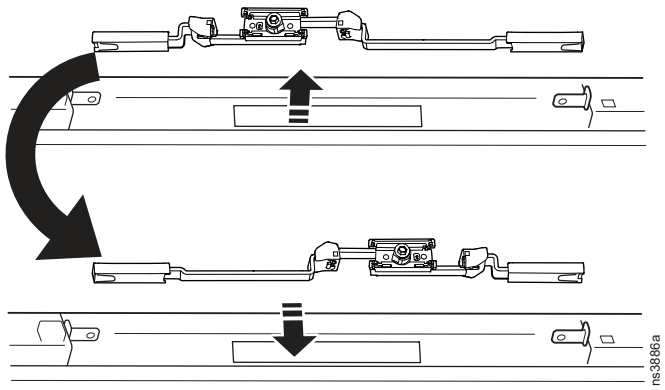

6. Press the retaining brackets fully into the latching ends of the locking mechanism.

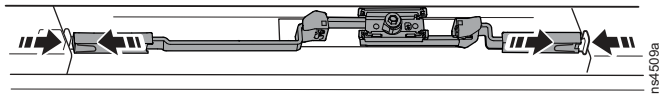

7. With the handle in the closed position, insert the handle assembly through the cutout in the door and into the locking mechanism.

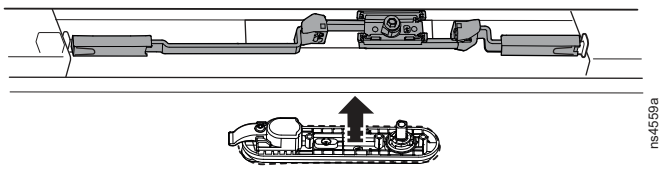

8. Secure the handle assembly to the locking mechanism with the two (2) Phillips head screws.

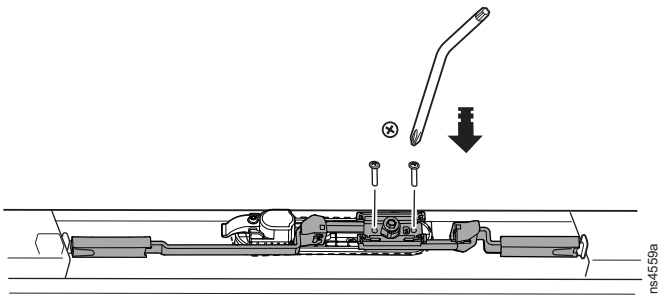

9. Reverse the cam 180° (from its original position when removed). See Step 1 in Reverse the Door Handle on page 16 to confirm the correct position. Secure the cam to the locking mechanism with the T30 screw.

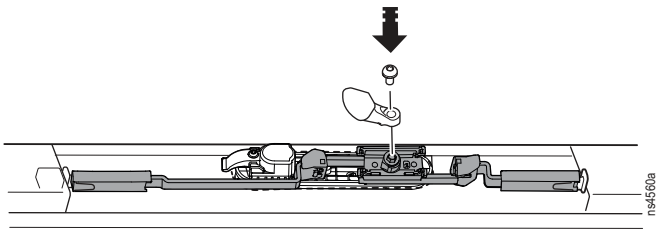

Reverse the Hinges and Latches

1. Remove the T30 screws securing the hinges and latches to the rack.
   Remove the hinges and latches. Save the T30 screws, hinges, and latches for the installation step.

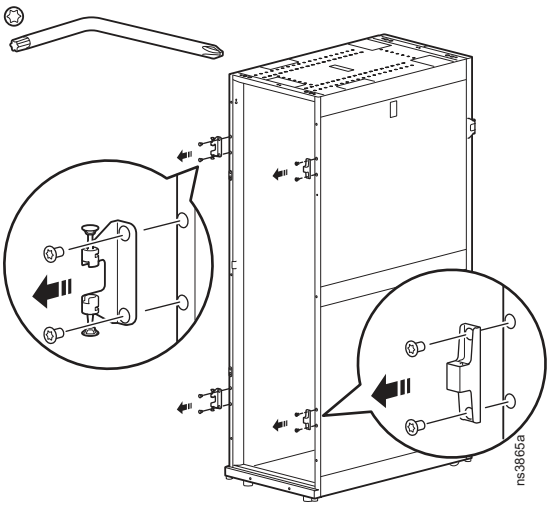

2. Use the T30 screws removed in the previous step to install the hinges and latches.

   Install the hinges on the right side of the rack where the latches were removed.

   Install the latches on the left side of the rack where the hinges were removed.

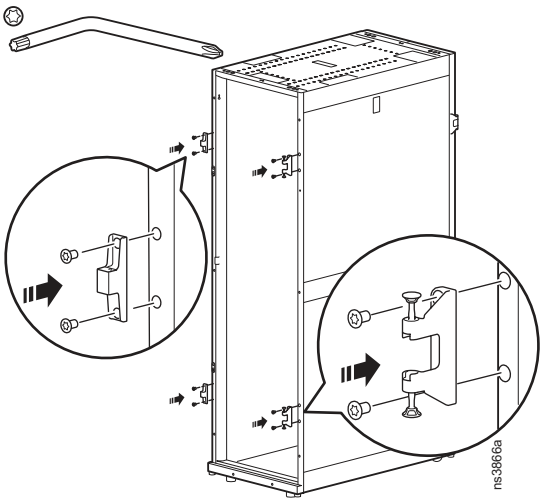

Install the Door

⚠⚠ DANGER

HAZARD OF ELECTRIC SHOCK

Ground wires on the doors must be connected while the doors are installed.

Failure to follow these instructions will result in death or serious injury.

1. The door, with its locking mechanism reversed, is rotated 180° from its original position to install to the hinges. The hinges and latches have been moved to the new configuration.
   Follow the Door Installation instructions on page 14.

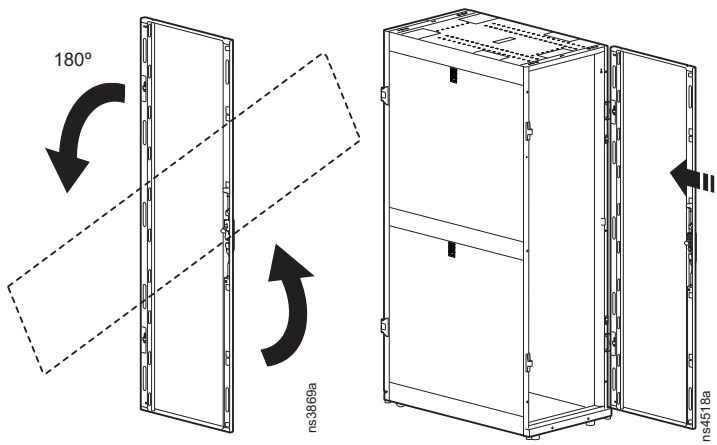

2. Install the ground wire on the right side of the frame where the hinges are located and to the door.

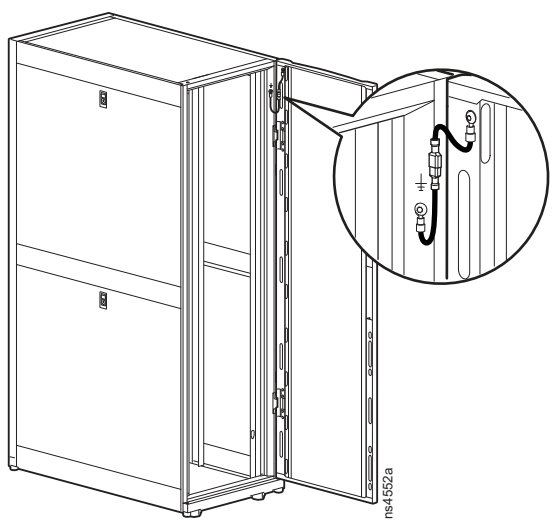

3. Reverse the logo badge. Once the door has been reversed, the logo badge will now be on the bottom of the door. Push the four (4) pegs that hold the logo badge through the holes of the mesh in the door. Rotate the logo badge and install to holes in the mesh at the top of the door.

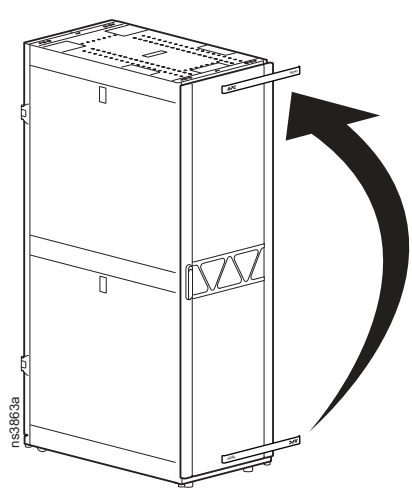

Adjust the Vertical Mounting Rails

NOTE: NetShelter SX 2nd Generation Racks are intended for use with Listed equipment. If you install un-Listed equipment, you should evaluate the safety of your configuration.

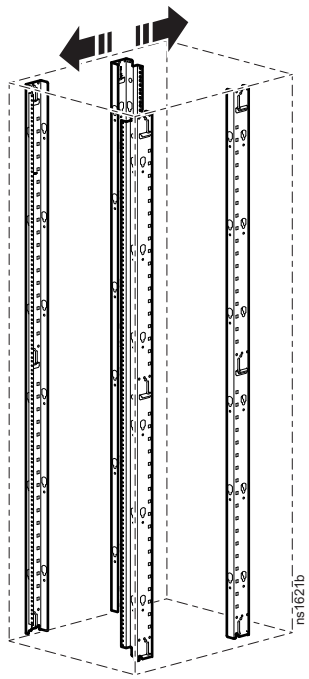

Vertical mounting rails come factory-installed at 737 mm (29 in), the proper location for use with rack-mountable equipment.

The vertical mounting rails are adjustable towards the front or the rear of the rack to accommodate different rails or equipment with other depths.

A common application for the 750 mm (29.5 in) or 800 mm (31.5 in) wide rack is to move the rails to a depth of 476 mm (18.75 in) to accommodate networking and telecommunications equipment.

Position the Vertical Mounting Rails

- **Configuration 1:** The Accessory Channel is installed. The vertical mounting rails can be installed a minimum distance of (**a**) and can extend as far as (**b**).
- **Configuration 2:** The Accessory Channel is removed. The vertical mounting rails can extend as far as (**c**).

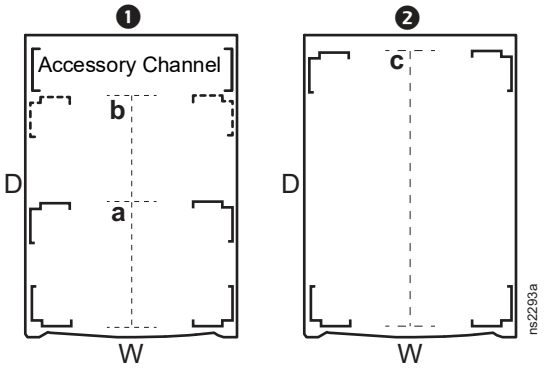

Top View

Rack Width (W)	Rack Depth (D)	a	b	c
600 mm	1070 mm	190 mm (7.5 in)	781 mm (30.75 in)	921 mm (36.25 in)
750/800 mm	1070 mm	286 mm (11.25 in)	781 mm (30.75 in)	921 mm (36.25 in)
600 mm	1200 mm	190 mm (7.5 in)	781 mm (30.75 in)	1035 mm (40.75 in)
750/800 mm	1200 mm	286 mm (11.25 in)	781 mm (30.75 in)	1048 mm (41.25 in)

Vertical Mounting Rail Adjustment

⚠ WARNING

FALLING EQUIPMENT HAZARD

Remove all equipment installed on the vertical mounting rails before performing any adjustments.

Failure to follow these instructions can result in serious injury or equipment damage.

1. Use the provided Torx T30 tool to loosen the top, middle, and bottom Torx screws ❶ holding the vertical mounting rail in place. The brackets, all held in place by the Torx screws, will now be loose. Move all three brackets to the designated unlocked position ❷.

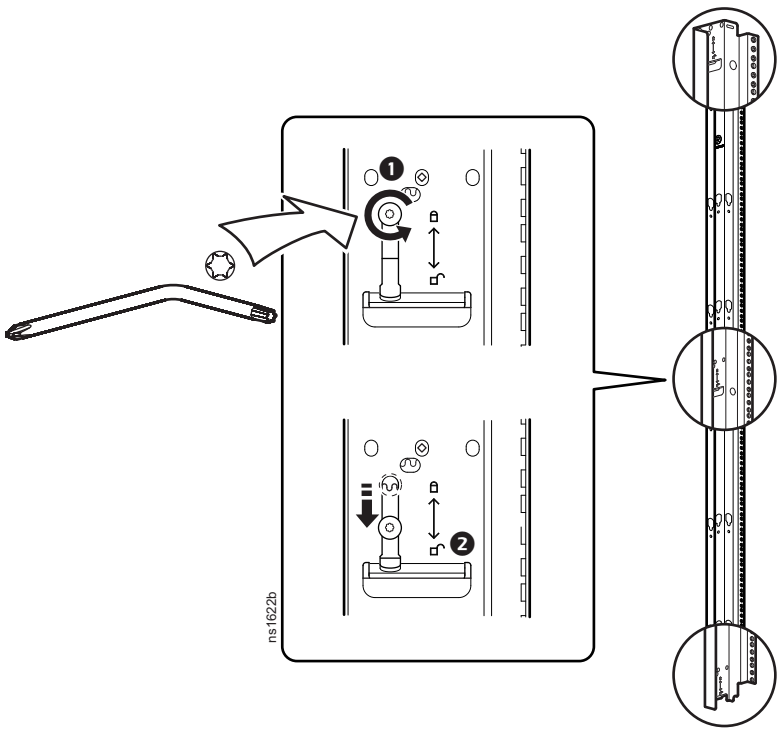

NOTE: NetShelter SX 2nd Generation Racks have different Vertical Mounting Rails depending on the rack width. See the illustrations below.

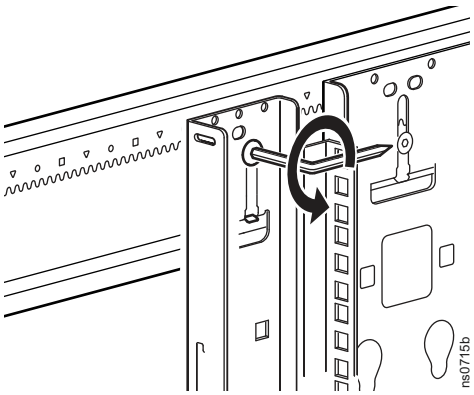

600 mm wide rack

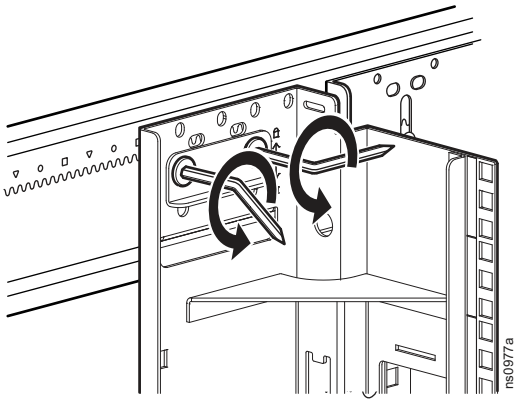

750 mm wide rack
800 mm wide rack

2. Move the vertical mounting rail to the desired location. Vertical mounting rails adjust in 6 mm (1/4 in) increments.

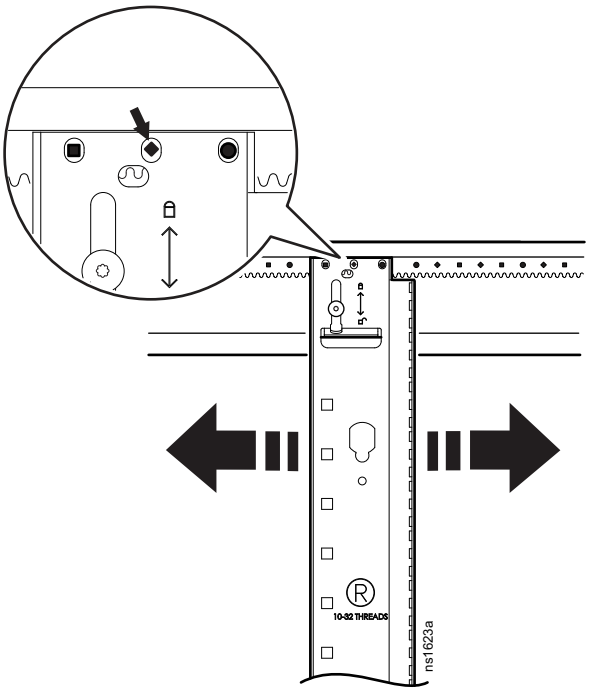

To align the vertical mounting rail, note the symbol (in the example illustration, a diamond) visible through one of the three holes. Only one symbol will be visible. In the factory standard position, a circle symbol is visible.

To ensure alignment, make sure the same symbol is visible through the corresponding hole at both the top and the bottom of the rail.

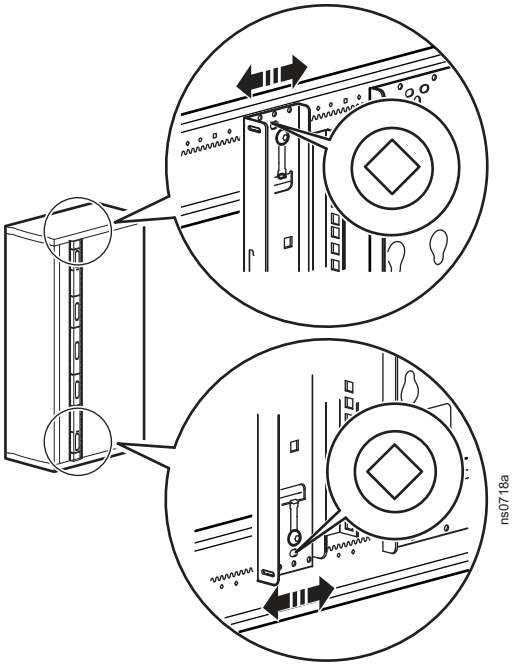

3. When the vertical mounting rail is in the desired location at the top, middle, and bottom, raise the flat bracket to the lock position. The teeth in the bracket will engage fully with the teeth in the side brace ❶. Tighten the Torx screws ❷.

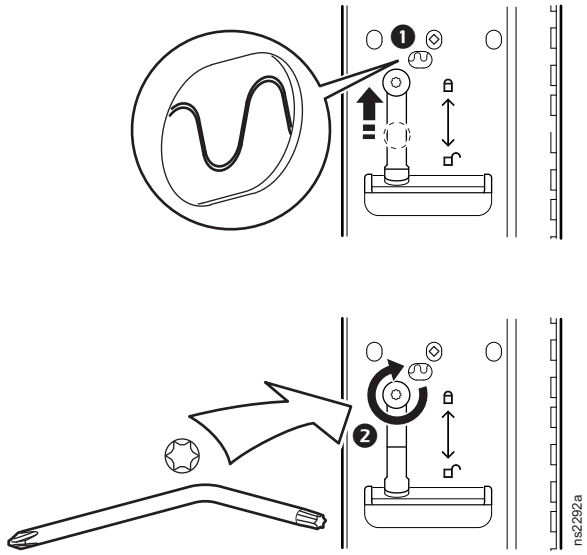

NOTE: On the 750 mm (29.5 in) and 800 mm (31.5 in) wide racks there are circle symbols 476 mm (18.75 in) behind the front mounting rail. These circle symbols designate rear vertical mounting rail positions required for installation of particular networking and telecommunications equipment.

Cable Cutout Covers

NetShelter SX 2nd Generation 750 mm (29.5 in) and 800 mm (31.5 in) wide racks include cable cutouts.

❶ For equipment requiring side airflow, on the side of the rack nearest the air intake for the equipment, remove the cable cutout covers from the front vertical mounting rail.

❷ Reinstall the covers in the cable cutout holes on the rear vertical mounting rail on the same side of the rack.

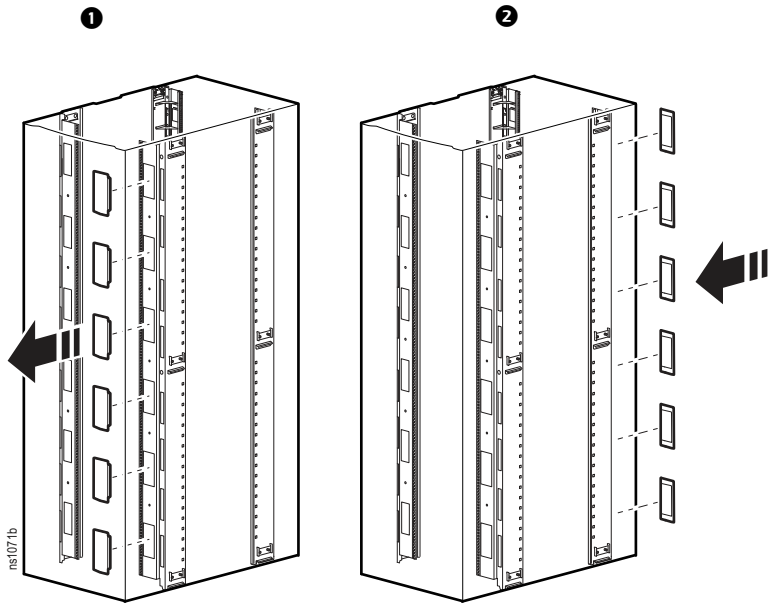

Cable Management

The NetShelter 2nd Generation Rack has multiple cable access openings on the roof, sides, and bottom. See Ⓐ in th illustration. Route, secure, and organize cables using these openings.

Additionally, two rear vertical 0U cable organizers, or accessory channels Ⓑ, are included with the rack.

More cable management accessories are available. Go to **www.apc.com**, or contact an APC reseller for more information.

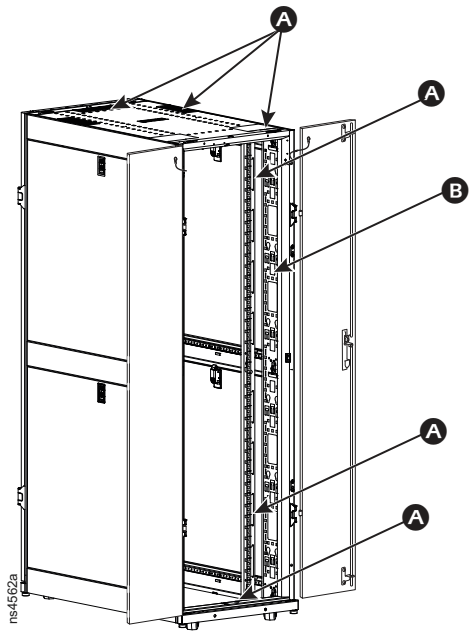

Accessory Channel

The accessory channels provide toolless mounting capabilities for Rack Power Distribution Units and cable management accessories.

There are four accessory channels included with the 1200 mm (47.24 in) deep rack. There are two accessory channels included with all other racks. The factory-default position for the accessory channels is in the rear of the rack, as shown in the graphic to the right.

The channels also provide tie-off locations for cables, as well as other specific holes for managing cables with many NetShelter brackets, fasteners, and toolless mounting equipment.

Similar to the vertical mounting rails, the accessory channel can be moved anywhere along the horizontal side rails. The accessory channels are attached to the horizontal side rails at the top and bottom in the same manner as the vertical mounting rails. See “Adjust the Vertical Mounting Rails” on page 21 for more information.

NOTE: If needed, the accessory channels can be removed or additional vertical 0U accessory channels can be ordered (from **www.apc.com**or an APC reseller) and installed.

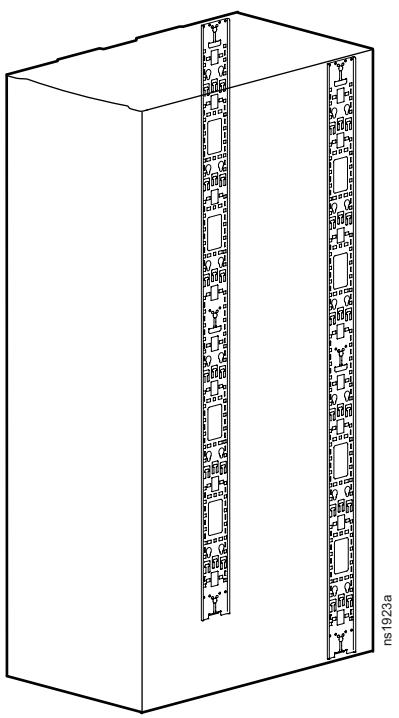

Install Your Equipment

⚠ WARNING

TIP HAZARD

- This rack is easily tipped. Make sure you have secured the rack to the floor before installing equipment.
- Install the heaviest equipment first and toward the bottom of the rack.
- Do not extend equipment on sliding rails until you have installed 158 kg (350 lb) of equipment into the bottom of the rack or until you have installed the stabilizer plate or bolt-down brackets.
- Do not extend more than one piece of equipment on sliding rails at a time.

Failure to follow these instructions can result in death, serious injury, or equipment damage.

1. Review the equipment manufacturer's installation instructions.
2. Locate the top and bottom U-space on the vertical mounting rails. Every third hole on the mounting rails is numbered to indicate the middle of a U-space.
3. Install the cage nuts on the interior of the vertical mounting rail, then install the equipment.

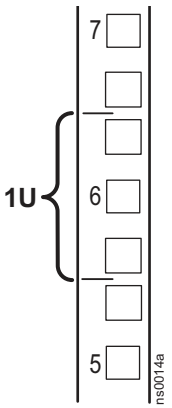

Cage Nuts

If needed, a cage nut hardware kit (AR8100) can be ordered. Contact Customer Support at **www.apc.com** or an APC reseller to order a cage nut hardware kit.

⚠ CAUTION

FALLING EQUIPMENT HAZARD

Do NOT install cage nuts vertically with the tabs engaging the top and bottom of the square hole.

Failure to follow these instructions can result in minor or moderate injury.

- Install cage nuts horizontally, with the tabs engaging the sides of the square hole.
- Install the cage nuts on the interior of the vertical mounting rail.

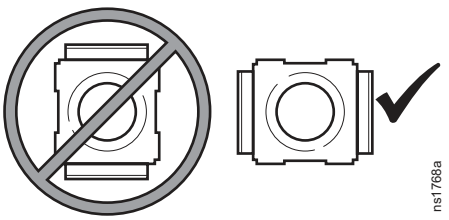

Installation

1. From inside of the vertical mounting rail, insert the cage nut into the square hole.
2. Hook one tab of the cage nut assembly through the far side of the hole.
3. Place the cage nut tool on the other side of the cage nut and pull to snap into position.

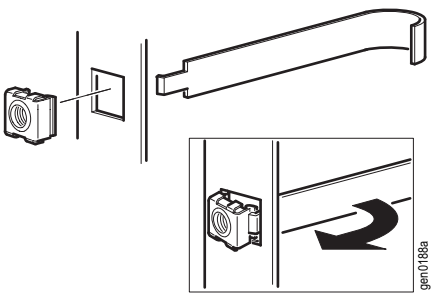

Removal

1. Remove any attached screw.
2. Grasp the cage nut and squeeze the sides to release it from the square hole.

Specifications

General specifications for NetShelter SX 2nd Generation Racks covered in this manual:

Height

U-Space	mm	in
42	1 991	78.4
45	2 124	83.6
48	2 258	88.9

Width

mm	in
600	23.6
750	29.5
800	31.5

Depth

mm	in
1 070	42.1
1 200	47.2

Door Perforation pattern	80% open area
Wiring Clearance (between front door and vertical rail)	60.96 mm (2.40 in)
Weight rating: Static load[1]	1818 kg (4000 lb)
Weight rating: Dynamic (rolling)[2]	1020.58 kg (2250 lb)
[1]Static Load: The maximum weight the rack can hold while the leveling feet are lowered. [2] Dynamic Load: The maximum weight the rack can hold while rolling on its casters.	

NOTE: Additional packaging is required if the rack will be shipped with equipment installed.
See the NetShelter SX product family page at **www.apc.com** for details on racks with shock packaging.

Five-Year Factory Warranty

The limited warranty provided by APC in this Statement of Limited Factory Warranty applies only to products you purchase for your commercial or industrial use in the ordinary course of your business.

Terms of warranty

APC warrants its products to be free from defects in materials and workmanship for a period of five years from the date of purchase. The obligation of APC under this warranty is limited to repairing or replacing, at its sole discretion, any such defective products. This warranty does not apply to equipment that has been damaged by accident, negligence, or misapplication or has been altered or modified in any way. Repair or replacement of a defective product or part thereof does not extend the original warranty period. Any parts furnished under this warranty may be new or factory-remanufactured.

Non-transferable warranty

This warranty extends only to the original purchaser who must have properly registered the product. The product may be registered at the APC website, **www.apc.com**.

Exclusions

APC shall not be liable under the warranty if its testing and examination disclose that the alleged defect in the product does not exist or was caused by end user's or any third person's misuse, negligence, improper installation or testing. Further, APC shall not be liable under the warranty for unauthorized attempts to repair or modify wrong or inadequate electrical voltage or connection, inappropriate on-site operation conditions, corrosive atmosphere, repair, installation, start-up by non-APC designated personnel, a change in location or operating use, exposure to the elements, Acts of God, fire, theft, or installation contrary to APC recommendations or specifications or in any event if the APC serial number has been altered, defaced, or removed, or any other cause beyond the range of the intended use.

THERE ARE NO WARRANTIES, EXPRESS OR IMPLIED, BY OPERATION OF LAW OR OTHERWISE, OF PRODUCTS SOLD, SERVICED OR FURNISHED UNDER THIS AGREEMENT OR IN CONNECTION HEREWITH. APC DISCLAIMS ALL IMPLIED WARRANTIES OF MERCHANTABILITY, SATISFACTION AND FITNESS FOR A PARTICULAR PURPOSE. APC EXPRESS WARRANTIES WILL NOT BE ENLARGED, DIMINISHED, OR AFFECTED BY AND NO OBLIGATION OR LIABILITY WILL ARISE OUT OF, APC RENDERING OF TECHNICAL OR OTHER ADVICE OR SERVICE IN CONNECTION WITH THE PRODUCTS. THE FOREGOING WARRANTIES AND REMEDIES ARE EXCLUSIVE AND IN LIEU OF ALL OTHER WARRANTIES AND REMEDIES. THE WARRANTIES SET FORTH ABOVE CONSTITUTE APC'S SOLE LIABILITY AND PURCHASER'S EXCLUSIVE REMEDY FOR ANY BREACH OF SUCH WARRANTIES. APC WARRANTIES EXTEND ONLY TO PURCHASER AND ARE NOT EXTENDED TO ANY THIRD PARTIES.

IN NO EVENT SHALL APC, ITS OFFICERS, DIRECTORS, AFFILIATES OR EMPLOYEES BE LIABLE FOR ANY FORM OF INDIRECT, SPECIAL, CONSEQUENTIAL OR PUNITIVE DAMAGES, ARISING OUT OF THE USE, SERVICE OR INSTALLATION, OF THE PRODUCTS, WHETHER SUCH DAMAGES ARISE IN CONTRACT OR TORT, IRRESPECTIVE OF FAULT, NEGLIGENCE OR STRICT LIABILITY OR WHETHER APC HAS BEEN ADVISED IN ADVANCE OF THE POSSIBLY OF SUCH DAMAGES. SPECIFICALLY, APC IS NOT LIABLE FOR ANY COSTS, SUCH AS LOST PROFITS OR REVENUE, LOSS OF EQUIPMENT, LOSS OF USE OF EQUIPMENT, LOSS OF SOFTWARE, LOSS OF DATA, COSTS OF SUBSTITUENTS, CLAIMS BY THIRD PARTIES, OR OTHERWISE.

NO SALESMAN, EMPLOYEE OR AGENT OF APC IS AUTHORIZED TO ADD TO OR VARY THE TERMS OF THIS WARRANTY. WARRANTY TERMS MAY BE MODIFIED, IF AT ALL, ONLY IN WRITING SIGNED BY AN APC OFFICER AND LEGAL DEPARTMENT.

Warranty claims

Customers with warranty claims issues may access the APC customer support network through the Support page of the APC website, **www.apc.com/support**. Select your country from the country selection pull-down menu at the top of the Web page. Select the Support tab to obtain contact information for customer support in your region.

APC
70 Mechanic Street
Foxboro, MA 02035
USA

www.apc.com

As standards, specifications, and design change from time to time,
please ask for confirmation of the information given in this publication.

© 2024 - Schneider Electric. All rights reserved.

TME24330A