SHARP

PN-LM551
PN-LM431

INTERACTIVE DISPLAY

OPERATION MANUAL

HDMI™

IMPORTANT:
To aid reporting in case of loss or theft, please record the product's model and serial numbers in the space provided. The numbers are located in the rear of the product.

Model No.:

Serial No.:

U.S.A. ONLY

Information on the Disposal of this Equipment and its Batteries

IF YOU WISH TO DISPOSE OF THIS EQUIPMENT OR ITS BATTERIES, DO NOT USE THE ORDINARY WASTE BIN, AND DO NOT PUT THEM INTO A FIREPLACE!
Used electrical and electronic equipment and batteries should always be collected and treated SEPARATELY in accordance with local law.
Separate collection promotes an environment-friendly treatment, recycling of materials, and minimizing final disposal of waste. IMPROPER DISPOSAL can be harmful to human health and the environment due to certain substances! Take USED EQUIPMENT to a local, usually municipal, collection facility, where available.
Remove USED BATTERIES from equipment, and take them to a battery collection facility; usually a place where new batteries are sold.
If in doubt about disposal, contact your local authorities or dealer and ask for the correct method of disposal.
ONLY FOR USERS IN THE EUROPEAN UNION, AND SOME OTHER COUNTRIES; FOR INSTANCE NORWAY AND SWITZERLAND: Your participation in separate collection is requested by law.
The symbol shown above appears on electrical and electronic equipment and batteries (or the packaging) to remind users of this. If 'Hg' or 'Pb' appears below the symbol, this means that the battery contains traces of mercury (Hg) or lead (Pb), respectively.
Users from PRIVATE HOUSEHOLDS are requested to use existing return facilities for used equipment and batteries. Batteries are collected at points of sale. Return is free of charge.
If the equipment has been used for BUSINESS PURPOSES, please contact your SHARP dealer who will inform you about take-back. You might be charged for the costs arising from take-back. Small equipment (and small quantities) might be taken back by your local collection facility. For Spain: Please contact the established collection system or your local authority for take-back of your used products.

FOR CUSTOMERS IN U.K.
IMPORTANT

The wires in this mains lead are coloured in accordance with the following code:

GREEN-AND-YELLOW:	**Earth**
BLUE:	**Neutral**
BROWN:	**Live**

As the colours of the wires in the mains lead of this apparatus may not correspond with the coloured markings identifying the terminals in your plug proceed as follows:

- The wire which is coloured GREEN-AND-YELLOW must be connected to the terminal in the plug which is marked by the letter **E** or by the safety earth ⏚ or coloured green or green-and-yellow.
- The wire which is coloured BLUE must be connected to the terminal which is marked with the letter **N** or coloured black.
- The wire which is coloured BROWN must be connected to the terminal which is marked with the letter **L** or coloured red.

Ensure that your equipment is connected correctly. If you are in any doubt consult a qualified electrician.
"WARNING: THIS APPARATUS MUST BE EARTHED."

IMPORTANT INFORMATION

WARNING: TO REDUCE THE RISK OF FIRE OR ELECTRIC SHOCK, DO NOT EXPOSE THIS PRODUCT TO RAIN OR MOISTURE.

CAUTION

RISK OF ELECTRIC SHOCK
DO NOT OPEN

CAUTION: TO REDUCE THE RISK OF ELECTRIC SHOCK, DO NOT REMOVE COVER.
NO USER-SERVICEABLE PARTS INSIDE.
REFER SERVICING TO QUALIFIED SERVICE PERSONNEL.

The lightning flash with arrowhead symbol, within a triangle, is intended to alert the user to the presence of uninsulated “dangerous voltage” within the product’s enclosure that may be of sufficient magnitude to constitute a risk of electric shock to persons.

The exclamation point within a triangle is intended to alert the user to the presence of important operating and maintenance (servicing) instructions in the literature accompanying the product.

WARNING:
FCC Regulations state that any unauthorized changes or modifications to this equipment not expressly approved by the manufacturer could void the user’s authority to operate this equipment.

NOTE:
This equipment has been tested and found to comply with the limits for a Class B digital device, pursuant to Part 15 of the FCC Rules. These limits are designed to provide reasonable protection against harmful interference in a residential installation.
This equipment generates, uses and can radiate radio frequency energy and, if not installed and used in accordance with the instructions, may cause harmful interference to radio communications. However, there is no guarantee that interference will not occur in a particular installation.
If this equipment does cause harmful interference to radio or television reception, which can be determined by turning the equipment off and on, the user is encouraged to try to correct the interference by one or more of the following measures:
- Reorient or relocate the receiving antenna.
- Increase the separation between the equipment and receiver.
- Connect the equipment into an outlet on a circuit different from that to which the receiver is connected.
- Consult the dealer or an experienced radio/TV technician for help.

U.S.A. ONLY

To maintain compliance with EMC regulations, use shielded cables to connect to the following terminals: HDMI input terminal, HDMI output terminal, RS-232C input terminal, USB Type-C port, TOUCH PANEL terminal, USB port and LAN terminal.

DEAR SHARP CUSTOMER

Thank you for your purchase of a SHARP LCD product. To ensure safety and many years of trouble-free operation of your product, please read the Safety Precautions carefully before using this product.

SAFETY PRECAUTIONS

Electricity is used to perform many useful functions, but it can also cause personal injuries and property damage if improperly handled. This product has been engineered and manufactured with the highest priority on safety. However, improper use can result in electric shock and/or fire. In order to prevent potential danger, please observe the following instructions when installing, operating and cleaning the product. To ensure your safety and prolong the service life of your LCD product, please read the following precautions carefully before using the product.

1. Read instructions — All operating instructions must be read and understood before the product is operated.
2. Keep this manual in a safe place — These safety and operating instructions must be kept in a safe place for future reference.
3. Observe warnings — All warnings on the product and in the instructions must be observed closely.
4. Follow instructions — All operating instructions must be followed.
5. Cleaning — Unplug the power cord from the power outlet before cleaning the product. Use a dry cloth to clean the product. Do not use liquid cleaners or aerosol cleaners. Do not use dirty cloths. Doing so may damage the product.
6. Attachments — Do not use attachments not recommended by the manufacturer. Use of inadequate attachments can result in accidents.
7. Water and moisture — Do not use the product near water. Do not install the product in a place where water may splash onto it. Be careful of equipment which drains water such as an air-conditioner.
8. Ventilation — The vents and other openings in the cabinet are designed for ventilation.
   Do not cover or block these vents and openings since insufficient ventilation can cause overheating and/or shorten the life of the product. Do not place the product on a sofa, rug or other similar surface, since they can block ventilation openings. Do not place the product in an enclosed place such as a bookcase or rack, unless proper ventilation is provided or the manufacturer's instructions are followed.
9. Power cord protection — The power cords must be routed properly to prevent people from stepping on them or objects from resting on them.
10. The screen used in this product is made of glass. Therefore, it can break when the product is dropped or applied with impact. Be careful not to be injured by broken glass pieces in case the screen breaks.
11. Overloading — Do not overload power outlets or extension cords. Overloading can cause fire or electric shock.
12. Entering of objects and liquids — Never insert an object into the product through vents or openings. High voltage flows in the product, and inserting an object can cause electric shock and/or short internal parts.
    For the same reason, do not spill water or liquid on the product.
13. Servicing — Do not attempt to service the product yourself. Removing covers can expose you to high voltage and other dangerous conditions. Request a qualified service person to perform servicing.
14. Repair — If any of the following conditions occurs, unplug the power cord from the power outlet, and request a qualified service person to perform repairs.
    a. When the power cord or plug is damaged.
    b. When a liquid was spilled on the product or when objects have fallen into the product.
    c. When the product has been exposed to rain or water.
    d. When the product does not operate properly as described in the operating instructions.
       Do not touch the controls other than those described in the operating instructions. Improper adjustment of controls not described in the instructions can cause damage, which often requires extensive adjustment work by a qualified technician.
    e. When the product has been dropped or damaged.
    f. When the product displays an abnormal condition. Any noticeable abnormality in the product indicates that the product needs servicing.
15. Replacement parts — In case the product needs replacement parts, make sure that the service person uses replacement parts specified by the manufacturer, or those with the same characteristics and performance as the original parts. Use of unauthorized parts can result in fire, electric shock and/or other danger.
16. Safety checks — Upon completion of service or repair work, request the service technician to perform safety checks to ensure that the product is in proper operating condition.
17. Wall mounting — When mounting the product on a wall, be sure to install the product according to the method recommended by the manufacturer.
18. Heat sources — Keep the product away from heat sources such as radiators, heaters, stoves and other heat-generating products (including amplifiers).

19. Batteries — Incorrect use of batteries may cause the batteries to burst or ignite. A leaky battery may corrode the equipment, dirty your hands or spoil your clothing. In order to avoid these problems, make sure to observe the precautions below:
    - Use the specified batteries only.
    - Install the batteries with due attention to the plus (+) and minus (-) sides of the batteries according to the instructions in the compartment.
    - Do not mix old and new batteries.
    - Do not mix batteries of different types. Voltage specifications of batteries of the same shape may vary.
    - Replace an exhausted battery with a new one promptly.
    - If you will not use the remote control for a long time, remove the batteries.
    - If leaked battery fluid gets on your skin or clothing, rinse immediately and thoroughly. If it gets into your eye, bathe your eye well rather than rubbing and seek medical treatment immediately. Leaked battery fluid that gets into your eye or your clothing may cause a skin irritation or damage your eye.
    - Properly dispose of depleted batteries. Disposal of a battery into water, fire, or a hot oven, or mechanically crushing, cutting, or modifying a battery can result in an explosion.
    - Do not short-circuit the batteries.
20. Usage of the monitor must not be accompanied by fatal risks or dangers that, could lead directly to death, personal injury, severe physical damage or other loss, including nuclear reaction control in nuclear facility, medical life support system, and missile launch control in a weapon system.
21. Do not stay in contact with the parts of the product that become hot for long periods of time. Doing so may result in low-temperature burns.
22. Do not modify this product.

WARNING:
An apparatus with CLASS I construction shall be connected to a MAIN socket outlet with a protective earthing connection.

This product is designed for commercial application only and as such it falls outside the scope of Regulation (EU) 2023/826 laying down ecodesign requirements for off mode, standby mode, and networked standby energy consumption. Sharp do not recommend the product for domestic application and will not accept any liability for such use.

STABILITY HAZARD
If a monitor is not positioned in a sufficiently stable location, it can be potentially hazardous due to falling. Many injuries, particularly to children, can be avoided by taking simple precautions such as:
- Using fixing devices like wall mount brackets recommended by the manufacturer.
- Only using furniture that can safely support the monitor.
- Ensuring the monitor is not overhanging the edge of the supporting furniture.
- Not placing the monitor on tall furniture (for example, cupboards or bookcases) without anchoring both the furniture and the monitor to a suitable support.
- Not standing the monitors on cloth or other materials placed between the monitor and supporting furniture.
- Educating children about the dangers of climbing on furniture to reach the monitor or its controls.
- This equipment is not suitable for use in locations where children are likely to be present unsupervised.

Especially for child safety
- Don’t allow children to climb on or play with the monitor.
- Don’t place the monitor on furniture that can easily be used as steps, such as a chest of drawers.
- Remember that children can become excited while watching a program, especially on a “larger than life” monitor. Care should be taken to place or install the monitor where it cannot be pushed, pulled over, or knocked down.
- Care should be taken to route all cords and cables connected to the monitor so that they cannot be pulled or grabbed by curious children.

TIPS AND SAFETY INSTRUCTIONS

- The TFT color LCD panel used in this monitor is made with the application of high precision technology. However, there may be minute points on the screen where pixels never light or are permanently lit. Also, if the screen is viewed from an acute angle there may be uneven colors or brightness. Please note that these are not malfunctions but common phenomena of LCDs and will not affect the performance of the monitor.
- Do not display a still picture for a long period, as this could cause a residual image.
- Never rub or tap the monitor with hard objects.
- Please understand that our company bears no responsibility for errors made during use by the customer or a third party, nor for any other malfunctions or damage to this product arising during use, except where indemnity liability is recognized under law.
- This monitor and its accessories may be upgraded without advance notice.
- Do not use the monitor where there is a lot of dust, where humidity is high, or where the monitor may come into contact with oil or steam. Do not use in an environment where there are corrosive gases (sulfur dioxide, hydrogen sulfide, nitrogen dioxide, chlorine, ammonia, ozone, etc.). As this could lead to fire.
- Ensure that the monitor does not come into contact with water or other fluids. Ensure that no objects such as paper clips or pins enter the monitor as this could lead to fire or electric shock.
- Do not place the monitor on top of unstable objects or in unsafe places. Do not allow the monitor to receive strong shocks or to strongly vibrate. Causing the monitor to fall or topple over may damage it.
- Do not use the monitor near heating equipment or in places where there is likelihood of high temperature, as this may lead to generation of excessive heat and outbreak of fire.
- If the monitor is installed in a location exposed to sunlight such as next to a window, measures to reduce ultraviolet and infrared radiation and temperature measures are required. For details, consult your dealer.
- Images cannot be rotated on this monitor.
  When using in portrait orientation, you will need to prepare appropriately orientated content in advance.
- The power outlet shall be installed near the equipment and shall be easily accessible.
- Please be sure to constantly remove dust and garbage that has attached to the ventilation opening. If dust collects in the ventilation opening or the inside of the monitor, it may lead to excessive heat, outbreak of fire, or malfunction.
  Please request a cleaning of the inside of the monitor from an authorized servicing dealer or service center.
- Do not touch the screen when turning on the monitor, it will lead to a malfunction. When this occurs, turn the monitor power off and then on.
- Do not operate the screen with a hard or pointed object such as a fingernail or pencil.
- Depending on the application used, the touch pen may not function.
- If another USB device is connected to the computer to which the touch panel is connected, do not operate the USB device during touch panel input. Input may not take place correctly.
- If you or a third party uses the product incorrectly, or if the product is subjected to the effects of static electricity or electrical noise, or if the product malfunctions or is repaired, there is a risk that saved data will be corrupted or lost.
- Suitable for entertainment purposes at controlled luminous environments, to avoid disturbing reflections from the screen.
- Always back up important data to a USB flash drive.
- We bear no responsibility for protection of internal memory recorded content or related damages.
- Operating time and warranty.
  This product is designed for a maximum daily use of 18 hours. Use in excess of 18 hours per day is not covered by the warranty.
- Restarting the Android system.
  To maintain stable operation, the Android system must be restarted once a day.
  Android system can be restarted at the specified time. (See page 51.)

The Power Cord

- Use only the power cord supplied with the monitor.
- Do not damage the power cord nor place heavy objects on it, stretch it or over bend it. Also, do not add extension cords. Damage to the cord may result in fire or electric shock.
- Do not bind the power cord and the USB cable. It may trap heat and cause a fire.
- Do not use the power cord with a power tap.
  Adding an extension cord may lead to fire as a result of overheating.
- Do not remove or insert the power plug with wet hands. Doing so could result in electric shock.
- Unplug the power cord if it is not used for a long time.
- Do not attempt to repair the power cord if it is broken or malfunctioning. Refer the servicing to the service representative.
- This monitor is designed to be used in the condition of the power cord connected to the earth. If the power cord is not connected to the earth, it may cause electric shock. Please make sure the power cord is connected to the wall outlet directly and earthed properly. Do not use a 2-pin plug converter adapter.
- Do not touch the power plug if you hear thunder. Doing so could result in electric shock.
- Do not exceed the product's specified power supply voltage where it is installed. Doing so could result in a fire or electric shock. Please refer to the power supply voltage information in the specification.
- Be sure to clamp the power cord (supplied) onto the cable clamp attachment using the supplied cable clamp.

Network

- When you use a network, your communication data is exposed to the risks of being stolen or illegally accessed. To avoid these risks, you need to use this monitor in a secure network environment.

Manual Scope

- Microsoft and Windows are trademarks of the Microsoft group of companies.
- Apple, Mac and macOS are trademarks of Apple Inc., registered in the U.S. and other countries.
- The terms HDMI, HDMI High-Definition Multimedia Interface, HDMI Trade dress and the HDMI Logos are trademarks or registered trademarks of HDMI Licensing Administrator, Inc.
- Google, ChromeOS and Android are trademarks or registered trademarks of Google LLC.
- VESA is either registered trademark or trademark of Video Electronics Standards Association in the United States and/ or other countries.
- Bluetooth is a registered trademark of Bluetooth SIG, Inc.
- Arm and Cortex are registered trademarks of Arm Limited (or its subsidiaries) in the US and/or elsewhere.
- All other brand and product names are trademarks or registered trademarks of their respective holders.
- Illustrations in this manual may not exactly represent the actual product or display.
- This manual assumes use in landscape orientation, except where specifically noted.

LED Backlight

- The LED backlight in this product has a limited lifetime.
  * If the screen gets dark or does not turn on, it may be necessary to replace the LED backlight.
  * This LED backlight is exclusive to this product and must be replaced by an authorized servicing dealer or service center. Please contact an authorized servicing dealer or service center for assistance.

MOUNTING PRECAUTIONS

- For SHARP dealers or service engineers, please confirm “Mounting Precautions (For SHARP dealers and service engineers)”. (See page 60.)
- This product is for use indoors.
- When using a commercially available stand or mounting bracket, use a stand or mounting bracket that comply with VESA specifications.
- Since the monitor is heavy, consult your dealer before installing, removing or moving the monitor.
- Mounting the monitor on the wall requires special expertise and the work must be performed by an authorized dealer. You should never attempt to perform any of this work yourself. Our company will bear no responsibility for accidents or injuries caused by improper mounting or mishandling.
- Use the monitor with the surface perpendicular to a level surface. If necessary, the monitor may be tilted up to 20 degrees upward.
- When moving the monitor, be sure to hold the parts marked by ▭ below. Do not grasp the screen or control buttons. This may cause product damage, failure, or injury.

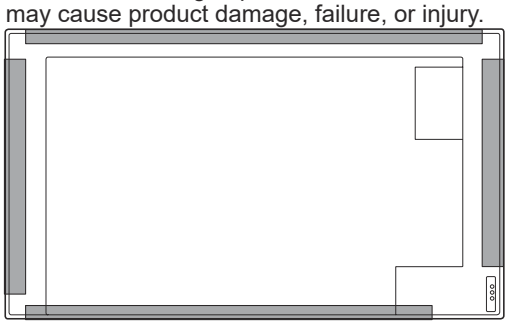

- This monitor should be used at an ambient temperature between 41°F (5°C) and 95°F (35°C). Provide enough space around the monitor to prevent heat from accumulating inside.

For the monitor in landscape orientation

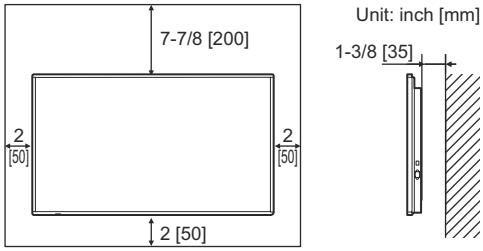

For the monitor in portrait orientation

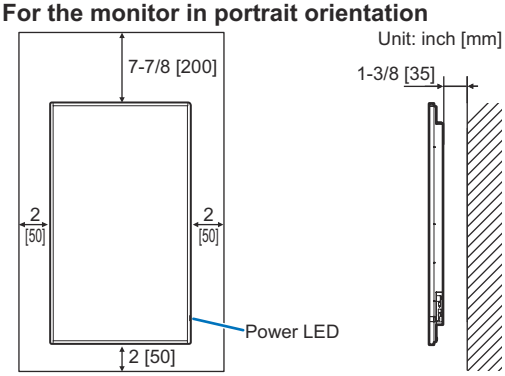

- Be careful of high temperatures in the surrounding area. If it is difficult to provide sufficient space for any reason such as the installation of the monitor inside a housing or of several units side-by-side, or if the ambient temperature may be outside of the range of 41°F (5°C) to 95°F (35°C), install a fan or take other measures to keep the ambient temperature within the required range.
- When installing two or more monitor units side-by-side, provide space of at least 3/16 inch (5 mm) around them to prevent stress on the adjacent unit or structure due to thermal expansion.
- Temperature condition may change when using the monitor together with the optional equipments recommended by SHARP. In such cases, please check the temperature condition specified by the optional equipments.
- Do not block any ventilation openings. If the temperature inside the monitor rises, this could lead to a malfunction.
- Do not place the monitor on a device which generates heat.
- Do not use the product in locations where the unit is exposed to direct sunlight or other strong light. Since this product operates with infrared rays, such light may cause a malfunction.
- When using multiple monitors closely, be sure the infrared transmitter/receiver does not affect the other ones.
- Adhere to the following when installing the monitor in its portrait orientation. Failing to adhere to the following may cause malfunctions.
  - Install the monitor such that the power LED is located on the bottom side.

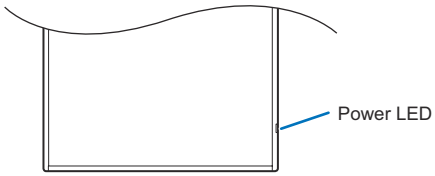

  - Set the “Screen Rotation” on the Admin Settings to “Portrait”. (See page 49.)
- Use the cover SHARP logo when you install the monitor in portrait orientation.

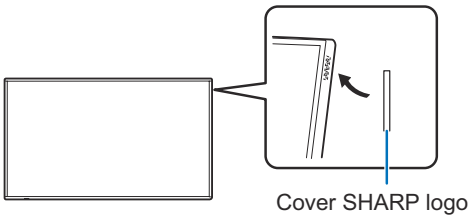

Upward-facing inclined installation

- When using the monitor laying flat on a surface (when the monitor is tilted more than 20 degrees upward from the perpendicular in relation to a level surface), consult an authorized dealer. There are some installation conditions. Adhere to the following. Failing to adhere to the following may cause malfunctions.
  - It can be inclined upwards up to 45°.
  - Use this monitor at the ambient temperature between 41°F (5°C) and 86°F (30°C). Provide 7-7/8 inch (200 mm) or more space between the monitor and the floor or other mounting surfaces and surrounding objects to prevent heat from accumulating inside. If it is difficult to provide sufficient space or if the ambient temperature may be outside of the range of 41°F (5°C) to 86°F (30°C), install a fan or take other measures to keep the ambient temperature within the required range.

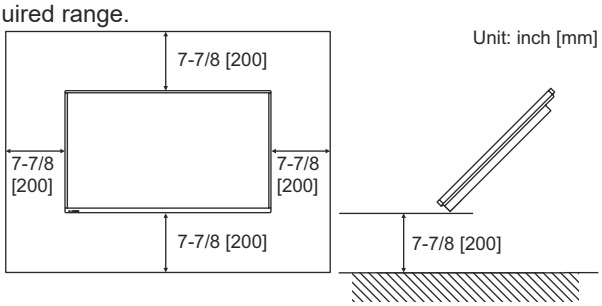

  - Do not press hard on the LCD panel or otherwise subject it to impacts.

Contents

IMPORTANT INFORMATION 3
DEAR SHARP CUSTOMER 4
SAFETY PRECAUTIONS 4
TIPS AND SAFETY INSTRUCTIONS 6
MOUNTING PRECAUTIONS 7
Supplied Components 9
System Requirements 9
Part Names 10
Connecting Peripheral Equipment 12
Connecting the Power Cord 14
Binding Cables 14
Preparing the Remote Control Unit 15
- Installing the batteries 15
- Remote control operation range 15

Mounting a web camera 16
Attaching the wireless adapter 16
Turning Power On/Off 17
- Turning on the main power 17
- Turning power on 17
- Turning power off 18

Touch Pen 19
Touch action 20
- Touch action 20
- Cautionary points 20

Basic Operation 21
- About the home screen of HOME mode 21
- Using the remote control unit 25
- Overlay board (Annotation) 28
- Freeze 29

Whiteboard 30
- Drawing 32
- Erasing a drawn line 32
- Selecting a drawn line 33
- Opening a file or application on the current sheet 33
- Opening a file 34
- Saving 34
- Settings 34

Wireless Display (EShare) 35
File Manager 36
Web Browser 40
Printing 41
Updating the Software (Updater) 42
Menu Items 43
- Displaying the menu screen 43
- Menu item details 44

Troubleshooting 53
Specifications 55
Intellectual Property Rights and Other Matters 59
Mounting Precautions (For SHARP dealers and service engineers) 60

Supplied Components

If any components are missing, please contact your dealer.

- ☐ Interactive Display: 1
- ☐ Remote control unit: 1
- ☐ Cable clamp: 3

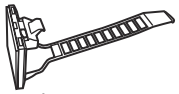

- ☐ Power cord
- ☐ Remote control unit battery: 2
- ☐ Setup Manual: 1
- ☐ Touch pen: 2
- ☐ Camera mount: 1
- ☐ Camera mount screw (M3 x 10): 1
- ☐ Camera screw (inch thread): 1
- ☐ USB cable: 1
- ☐ Wireless adapter: 1
- ☐ Wireless adaptor anti-theft fitting: 1
- ☐ Wireless adapter anti-theft fitting screw (M3 x 6): 1
- ☐ Cover SHARP logo: 1
  Place this sticker onto the SHARP logo to cover the logo.

PN-LM431 only (not for Europe)

- ☐ Stand mounting bracket: 2

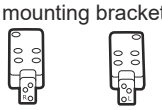

- ☐ Stand leg: 2

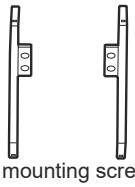

- ☐ Stand mounting screw:
  M3 x 10 : 10
  M5 x 14 : 4

* **Please note**: do not dispose of batteries in household waste for environmental protection. Follow the disposal instructions for your area.

System Requirements

Hardware	Must have a USB 2.0 compliant port.
Operating system	Windows 10, Windows 11
	macOS v13 or later
	ChromeOS Version 126 or later

To use the touch panel with an HDMI / DisplayPort connection, connect the supplied USB cable to the computer.

The touch panel and touch pen operate with the standard driver of each operating system. On the Mac, operation is only possible in mouse mode.

The Information Display Downloader can also be downloaded from the following website.
https://business.sharpusa.com/product-downloads (US)
https://www.sharp.eu/download-centre (Europe/Asia/Pacific)

When the Information Display Downloader is installed, you can check and download the most recent versions of the software programs and latest firmware.
Pen Software setup program and Touch Viewing Software/Touch Viewer setup program, latest firmware can be downloaded using Information Display Downloader.
To install the software, see the manual for each.

Part Names

■Front view

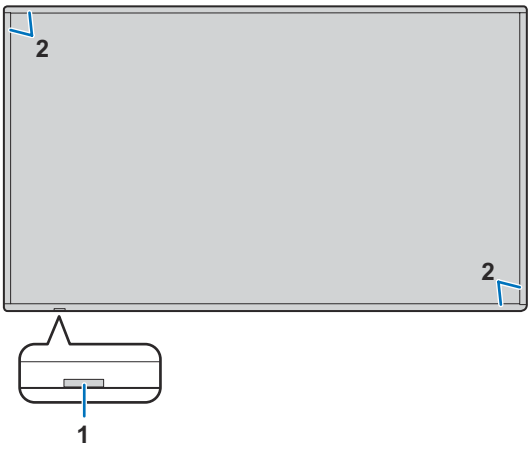

1. Remote control sensor / Power LED (See page 15.)
2. Infrared transmitter/receiver

■Rear view

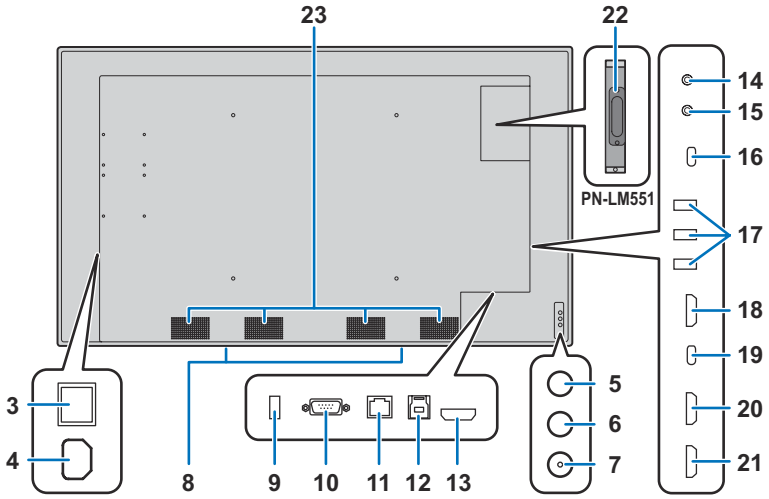

3. Main power switch (See page 17.)
4. AC input terminal (See page 14.)
5. INPUT button (Input mode selection)
6. HOME button (See page 21.)
7. POWER button (See page 17.)
8. Speakers
9. USB port for HOME mode (SoC) (See page 13.)
10. RS-232C input terminal (See page 13.)
11. LAN terminal (See page 13.)
12. TOUCH PANEL terminal (See page 12.)
13. HDMI 3 input terminal (support ARC) (See page 12.)
14. Input terminal for control kit (stereo mini jack) (See page 13.)
15. Audio output terminal (See page 13.)
16. USB Type-C port (USB hub) (power supply 5 V/1.5 A) (See page 13.)
17. USB port (USB hub) (USB3.0 compliant, Type-A) (See page 13.)
18. HDMI output terminal (See page 13.)
19. USB Type-C port (for touch panel) (See page 12.)
20. HDMI 1 input terminal (See page 12.)
21. HDMI 2 input terminal (See page 12.)
22. Expansion slot (PN-LM551 only) (See page 61.)
    This section is used to connect optional hardware for function expansion.
    Offering this attachment location is not a guarantee that future compatible hardware attachments will be released. Option boards that comply with the Open Pluggable Specification (OPS) can be installed.

    TIP
    - Please contact your supplier for a list of compatible option boards.
23. Vents

NOTE
- Consult your SHARP dealer for attachment/detachment of optional parts.

■Remote control unit

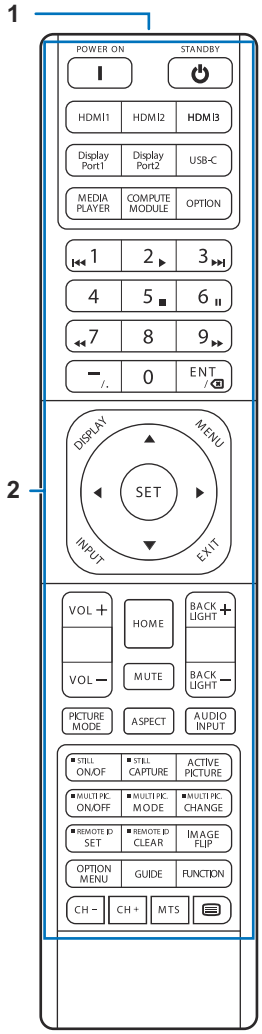

1. Signal transmitter
2. Operation buttons (See page 25.)

Connecting Peripheral Equipment

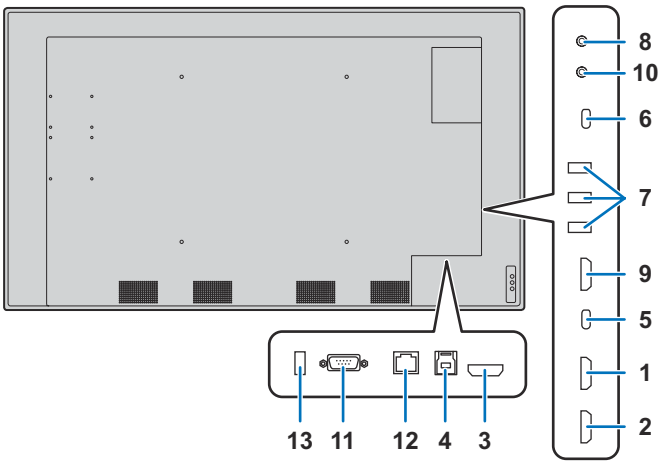

NOTE

- Be sure to turn off the main power switch and disconnect the plug from the power outlet before connecting/disconnecting cables. Also, read the manual of the equipment to be connected.
- Be careful not to confuse the input terminal with the output terminal when connecting cables. Accidentally reversing cables connected to the input and output terminals may cause malfunctions and the other problems.
- Do not use any cable that has a damaged or deformed terminal. Using such cables may cause malfunctions.
- Be sure to clamp the USB Type C cable (commercially available) by using the supplied cable clamp (See page 14.). When clamping the USB Type C cable, take care not to stress the USB Type C cable. Do not bend the USB Type C cable excessively.
- Use a USB flash drive with a shape that can be inserted in the USB port. Some USB flash drives with special shapes cannot be inserted. Do not forcibly insert a USB flash drive. This may damage the connector or cause failure.

TIP

- Operation is not guaranteed for all connected devices.
- If the audio output from the playback device is connected directly to speakers or other devices, the video on the monitor may appear delayed from the audio portion.
- A USB flash drive that is encrypted or has a security function cannot be used.
- Check the USB flash drive for viruses as necessary.

The TOUCH PANEL terminal is USB3.0 Type B.
Although the connector shape is different, the supplied USB cable (USB 2.0 Type B) can be connected to the TOUCH PANEL terminal.

1. **HDMI 1 input terminal**
2. **HDMI 2 input terminal**
   - Use a commercially available HDMI cable (conforming to the HDMI standard) that supports 4K.
3. **HDMI 3 input terminal (support ARC)**
   - Use a commercially available HDMI cable (conforming to the HDMI standard) that supports 4K. When connecting to ARC-compatible devices, please use cable that support even more ARC.
4. **TOUCH PANEL terminal**
   - When using the touch panel with a computer connected to the HDMI1 input terminal, HDMI2 input terminal, or HDMI3 input terminal, connect it to the computer using a USB cable (USB 2.0 Type B or USB 3.0 Type B).
5. **USB Type-C port (for touch panel)**
   - Connect to the computer with a commercially available USB cable (Type C, conforming to the USB standard).
   - You can connect a device that supports DisplayPort alternate mode. In order to supply power to connected devices, it is necessary to support the Power delivery standard.
   - For USB Power Delivery 65W charging, please use a cable that supports a current rating of 5A. Charging is limited to 60W when using a cable that supports a current rating of 3A.
   - USB Power Delivery is limited to 15 W when using the OPS.
   - If “USB Power” is set to “OFF” it cannot supply power to connected devices. (See page 47.)
   - There is no need to connect the USB cable to the TOUCH PANEL terminal.
   - When input mode is changed to USB-C, this monitor will be recognized by the connected computer.

6. USB Type-C port (USB hub) (power supply 5 V/1.5 A)

- When the input mode is HDMI1, HDMI2, or HDMI3, the USB port can be used for a computer connected to the TOUCH PANEL terminal.
- When the input mode is USB-C, the USB port can be used for a computer connected to the USB Type C port (for touch panel).
- When the input mode is HOME, the USB port can be used for HOME mode.
- When the input mode is “OPTION”, the USB port can be used as a USB port for a computer connected to the option slot.
- When supplying power via the USB Type-C port, use a USB cable supporting 3 A.

7. USB port (USB hub) (USB3.0 compliant, Type-A)

- When the input mode is HDMI1, HDMI2, or HDMI3, the USB port can be used for a computer connected to the TOUCH PANEL terminal.
- When the input mode is USB-C, the USB port can be used for a computer connected to the USB Type C port (for touch panel).
- When the input mode is HOME, the USB port can be used for HOME mode.
- When the input mode is “OPTION”, the USB port can be used as a USB port for a computer connected to the option slot.

NOTE

- Do not switch the input mode when a USB flash drive is connected. This could corrupt the data on the USB flash drive. Switch the input mode after removing the USB flash drive. Or use “USB Port Select” to fix the connection depending on the connected device. (See page 48.)
- If “USB Power” is set to “OFF”, it cannot supply power to connected devices. (See page 47.)

8. Input terminal for control kit (stereo mini jack)

- When the sensor unit of the separately sold control kit is connected to the connector, it can be controlled using the remote control light receiver on the sensor unit.
- Do not use this connector unless specified.
- When the optional sensor unit is connected, the monitor’s remote control sensor is disabled.
- For the remote control, please use the remote control included with this monitor.

9. HDMI output terminal

- The screen displayed on this monitor and the audio output from this monitor can be output to an external device.
- Use a commercially available HDMI cable (conforming to the HDMI standard) that supports 4K.
- When the input video is encrypted with copyright protection, the video cannot be output.
- When outputting the home screen, the external device must support HDCP.

10. Audio output terminal

- Audio that is input into the monitor is output.
- Connect using a commercially available audio cable (mini stereo jack).
- The volume of the output sound can be fixed by setting “Sound Setting” on the Admin Settings menu. (See page 46.)
- “Balance”, “Treble”, and “Bass” cannot be adjusted in the Audio menu.

11. RS-232C input terminal

- You can control the monitor from a computer by connecting a commercially available RS-232 cross cable between these terminals and the computer.
- S-Format and N-Format commands can be used for this monitor.
  For details, please refer to the manual on the following website.
  https://business.sharpusa.com/product-downloads (US)
  https://www.sharp.eu/download-centre (Europe/Asia/Pacific)

12. LAN terminal

- You can connect to a network by using a commercially available LAN cable.
- This monitor can be controlled via a network from a computer on the network. (See page 47.)
- S-Format and N-Format commands can be used for this monitor.
  For details, please refer to the manual on the following website.
  https://business.sharpusa.com/product-downloads (US)
  https://www.sharp.eu/download-centre (Europe/Asia/Pacific)

13. USB port for HOME mode (SoC) (USB2.0 compliant, Type-A)

- The USB port can be used for HOME mode.
  (The USB connection does not change even if the input mode is changed.)
- Connect to this port when using the wireless adapter (supplied). (See page 16.)

■ USB port in the HOME mode

- Connect USB devices (memory device, keyboard, mouse) that you want to use in HOME mode.
  Supported USB flash drives

File System	FAT32, exFAT
Capacity	Up to 64 GB (The maximum file size is 4 GB)

- A USB flash drive that is encrypted or has a security function cannot be used.
- Use a USB flash drive with a shape that can be inserted in the USB port. Some USB flash drives with special shapes cannot be inserted. Do not forcibly insert a USB flash drive. This may damage the connector or cause failure.

NOTE

- You can prohibit the use of USB flash drive. (See page 48.)

■ How to remove a USB flash drive

1. Start “File Manager”. (See page 36.)

2. Select the USB flash drive to remove, and then touch .

TIP

- To remove a USB flash drive connected to a computer, refer to the manual of the computer.

Connecting the Power Cord

NOTE

- Use only the power cord supplied with the monitor.
- When connecting the power cord to the product's AC input terminal, make sure the connector is fully and firmly inserted.

1. **Turn off the main power switch.**
2. **Plug the power cord (supplied) into the AC input terminal.**
3. **Plug the power cord (supplied) into the power outlet.**

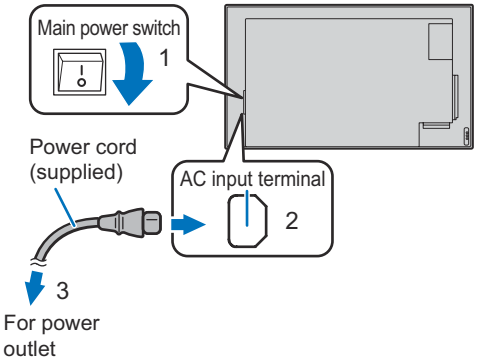

Binding Cables

The supplied cable clamps can be used to clamp the power cord and cables connected to the back of the monitor.

Attach the supplied cable clamps to a flat surface, removing any dust or dirt before attaching.
Do not attach over a vent.

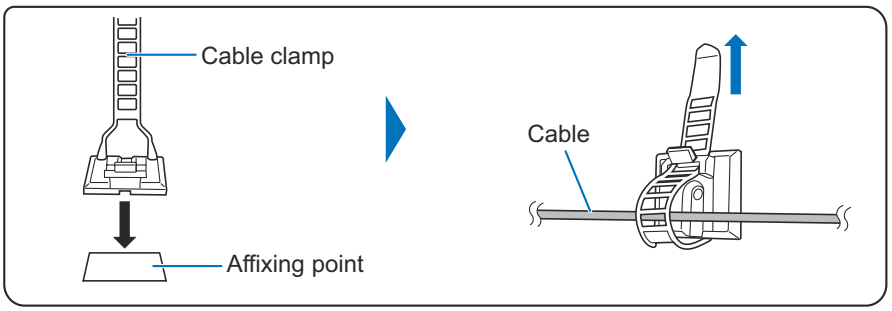

Preparing the Remote Control Unit

Installing the batteries

1. **Press the cover gently and slide it in the direction of the arrow.**

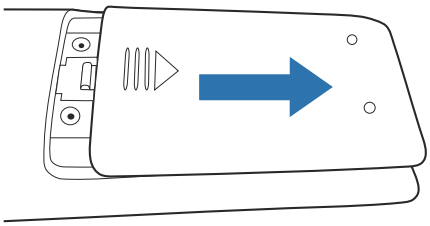

2. **See the instructions in the compartment and put in the batteries (R03 or LR03 (“AAA” size) x 2) with their plus (+) and minus (-) sides oriented correctly.**

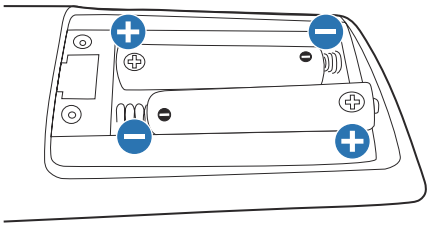

3. **Close the cover.**

TIP

- When the batteries become exhausted, replace them with new (commercially available) batteries.
- The supplied batteries may become exhausted quickly depending on how they are stored.
- If you will not be using the remote control for a long time, remove the batteries.
- Use manganese or alkaline batteries only.

Remote control operation range

The operation range of the remote control unit is approx. 16.4 feet (5 m) at an angle of approx 10° from the center to the top/bottom/right/left of the remote control sensor.

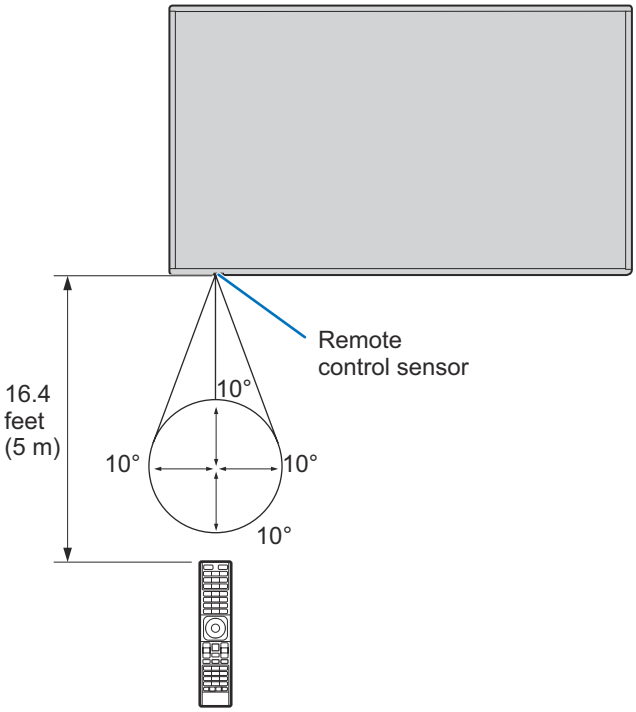

TIP

- Do not expose the remote control unit to shock by dropping or stepping on it. This could lead to a malfunction.
- Do not expose the remote control unit to liquids, and do not place it in an area with high humidity.
- The remote control unit may not work properly if the remote control sensor is under direct sunlight or strong lighting.
- Objects between the remote control unit and the remote control sensor may prevent proper operation.
- Replace the batteries when they run low as this may shorten the remote control’s operation range.
- If a fluorescent light is illuminated near the remote control unit, it may interfere with proper operation.
- Do not use it with the remote control of other equipment such as air conditioner, stereo components, etc.

Mounting a web camera

When placed horizontally

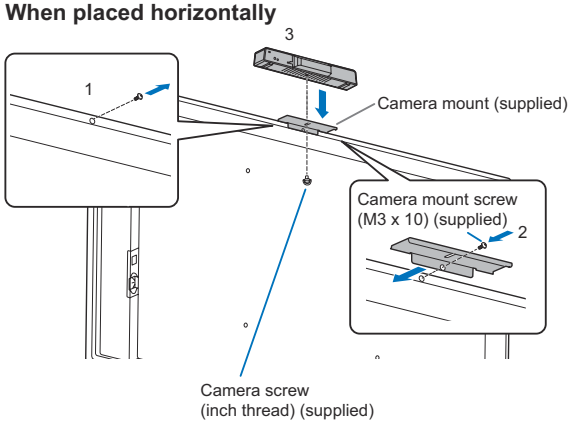

When placed vertically

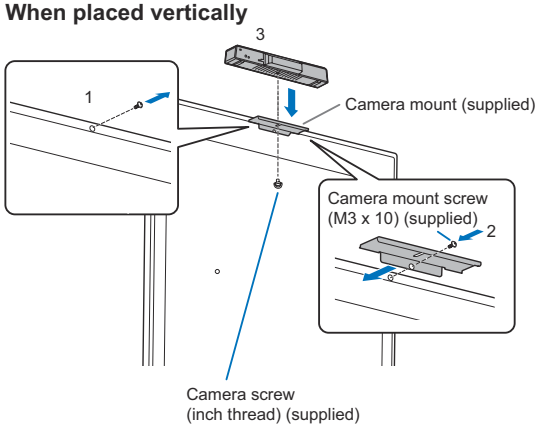

When the main unit is placed horizontally or vertically, it is possible to mount the PN-ZCMS1 Video-Conferencing Soundbar (optional) or a commercially available web camera (1.1 kg (2.4 lbs.) or less) with the camera mount (supplied).

1. **Remove the screw from this monitor.**
2. **Attach the camera mount (supplied) with the camera mount screw (M3x10) (supplied) (x1).**
3. **Attach the web camera on the camera mount with the camera screw (inch thread) (supplied) (x1).**

NOTE

- Fix the camera mount and the web camera firmly. Dropping the camera mount or the web camera may cause product damage, failure, or injury.
- Remove the web camera when moving this monitor.

TIP

- Store the removed screws.
- After removing the camera mount, reinstall the screws that were removed.
- When the monitor is placed portrait orientation and the web camera attached to the top, the camera footage is displayed sideways and black bars appear at the top and bottom.

Attaching the wireless adapter

1. **Connect the supplied wireless adapter to the USB port for HOME mode.**
2. **Attach the included wireless adapter anti-theft fitting using the wireless adapter anti-theft fitting screw (M3 x 6) (supplied) (x1).**

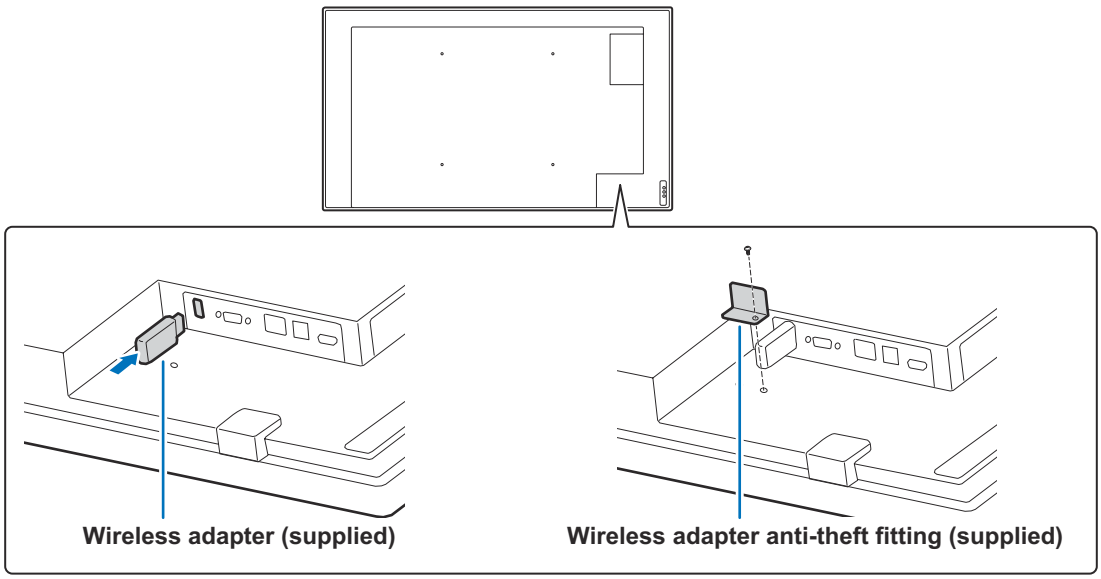

Turning Power On/Off

NOTE

- Turn on the monitor first before turning on the computer or playback device.
- When switching the main power switch or the POWER button off and back on, always wait for at least 5 seconds. A short interval may result in a malfunction.

Turning on the main power

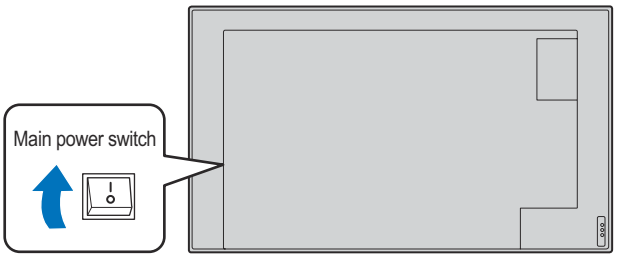

Off mode, when main power is off.

NOTE

- The main power must be turned on/off with the main power switch. Do not connect/disconnect the power cord or turn the breaker on/off while the main power switch is on.
- For a complete electrical disconnection, pull out the main plug.

Turning power on

1. Press the POWER ON button on the remote control unit. Or, press the POWER button on this monitor.

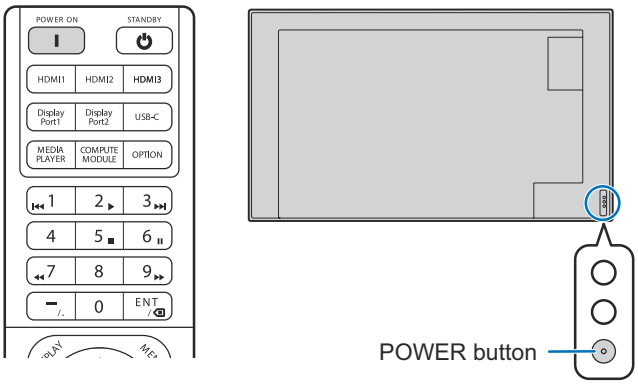

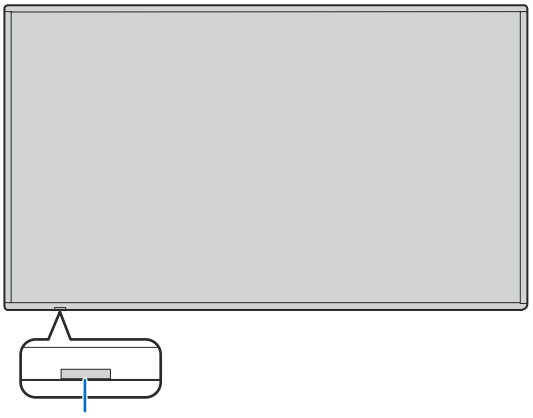

Status	Status of the monitor
Blue lit	Power on (normal operational state)
Green flashing	Input signal waiting state (When “Power Save” in “Power Save Settings” is on and “Quick Start” is on)
Orange lit	Input signal waiting state (When “Mode” in “Power Save Settings” is “Normal” and “Quick Start” is off)
Orange flashing	Input signal waiting state (When “Mode” in “Power Save Settings” is “Low Power” and “Quick Start” is off) *1 *2
Red lit	Standby state (When the power to this device is turned “OFF” with the remote control, etc., regardless of the status of connection of the network device and the video signal device)

*1 Networked standby mode when this monitor connected to a network (LAN) and “Power Save” of “Power Save Settings” is set to on, “Mode” is set to “Low Power”, “Quick Start” is set to off, and “Human sensing” is set to “Disable”.
Enter standby mode when LAN signal is not detected.

*2 If the input signal cable is disconnected and reconnected, it is restored. (See page 47.)

TIP

- When the main power switch is off, the monitor cannot be turned on.
- When the unit is in input signal waiting state, press the POWER button on the unit or the POWER ON button on the remote control to turn on the power.
- If you do not want the logo to be displayed when you turn on the power, turn off the “Logo Screen” switch icon in “System” in the Admin Settings menu. (See page 49.)
- You can fix the input mode that appears after startup. Set this in “Start input mode” under ”Input & Output” in the Admin Settings menu.
- When starting the option board, change “INPUT MODE” to “OPTION”.
- When you use the OPS for the first time, the OPS setup is executed. Do not turn off the main power switch while the setup is running.

■Operations after first power-on

When you turn on the power for the first time, a setting screen for language, date and time, etc. appears.
Be sure to set the language, date and time, etc.

1. **Select a language, and then touch “Next”.**
2. **Select the time zone, and then touch “Next”.**
3. **Set the date and time, and then touch “Next”.**
4. **Select the display setting orientation and touch “Next”.**
5. **Select the intended use of the display and touch “Next”.**
   Subsequently, set the intended use following the instructions on the screen.
   You can skip selecting the intended use of the display.
   When the setting is complete, “Finish” is displayed.
6. **Touch “Finish”.**
   The home screen is displayed. (See page 21.)

TIP

- Date and time will be reset if the main power remains off for about 2 weeks.*
  (*Approximate time. The actual time varies depending on the state of the monitor.)

Turning power off

1. **Press the STANDBY button on the remote control unit. Or, press the POWER button on this monitor.**

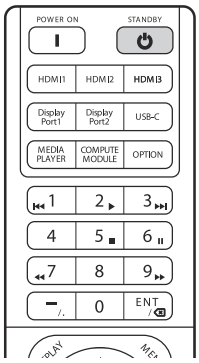

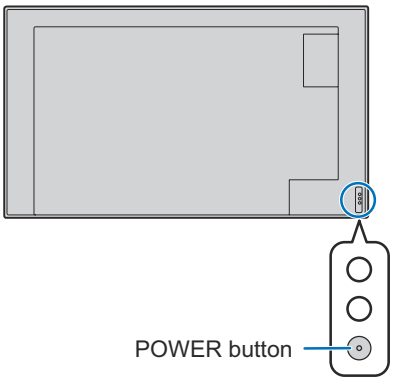

Touch Pen

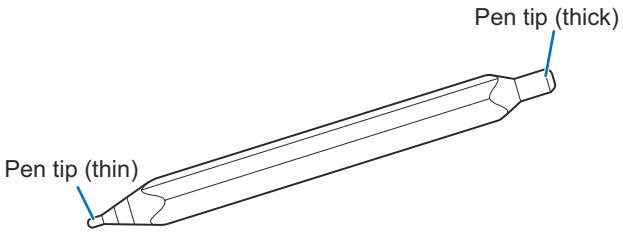

TIP

- Incorrect operation may result if your finger is too close to the tip of the pen.
- When multiple touch pens are used, touch positions and touch pen information (color, thickness, etc.) may become interchanged, and lines may break.
  - When touched simultaneously.
  - When touch pens are moved near each other.
- If the pen tip becomes worn or damaged, replace the touch pen. To purchase a new touch pen, consult your dealer.

The supplied touch pen is attached to the marked positions on this monitor.
The installation position of the touch pen is as shown in the figure below.

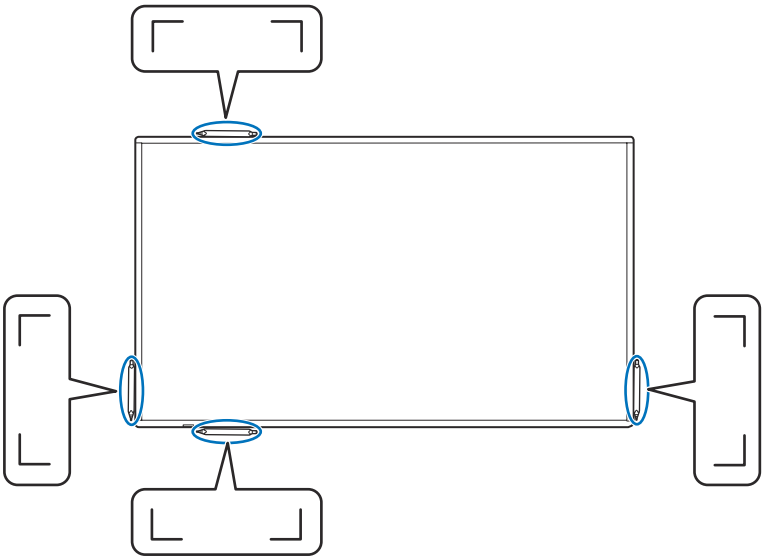

TIP

- Do not attach anything other than the supplied touch pen.
- The touch pen contains a magnet. Do not place watches or magnetic cards near the device.
- Please place or remove the pen from the holder area without sliding it along the bezel.

Touch action

Touch action

Touch actions that can be used with this monitor differ according to operating system and application. The functions of touch actions are also different. For details, check operating system Help and the application's support documentation.

TIP

- On the Mac, the actions are the equivalent mouse actions.
- For the procedures for using the touch pen in the Pen Software, see the Pen Software Operation Manual.
- The screen may not respond correctly in the following cases:
  - Touch gesture is too quick.
  - The distance between the two points is too short.
  - The two points intersect.
- In Windows 10/11, the touch keyboard functions are available.
  For details, see Windows Help.
  Touch Keyboard: An input panel with a software keyboard and handwriting recognition is displayed on the screen.
- In Windows 10/11, the ink function of Microsoft Office can be used. Handwritten comments can be written, and handwriting can be recognized.
  For details, see Microsoft Office Help.

Cautionary points

- Do not use the touch pen for any purpose other than touch panel operation.
- Do not press hard on the pen tip.
- Operation will not take place correctly if there is an obstacle between the infrared transmitter/receiver and the touch pen or your finger. Operation will not take place correctly if your fingers or your sleeve is near the screen.
- If the touch pen is held too flat against the screen, the touch position may not be correctly detected.
- If the touch pen does not work at the edge of the screen, move it slowly.
- If there is an infrared emitting device nearby, the device may not work properly.
- If there is dirt or foreign matter on the tip of the touch pen, remove it. Foreign matter may damage the screen.
- The touch position may shift on the login screen. In this case, use the keyboard or mouse.
- If the USB cable becomes disconnected, the touch panel may not operate correctly after the USB cable is reconnected. In this case, restart the computer.
- When lifting the pen tip or your finger, ensure to place ample distance from the screen. Inadequate spacing could lead to unintended touch detection, even when the screen is not physically contacted.

About the home screen of HOME mode

This screen appears when the HOME button is pressed or the input mode is changed to HOME.

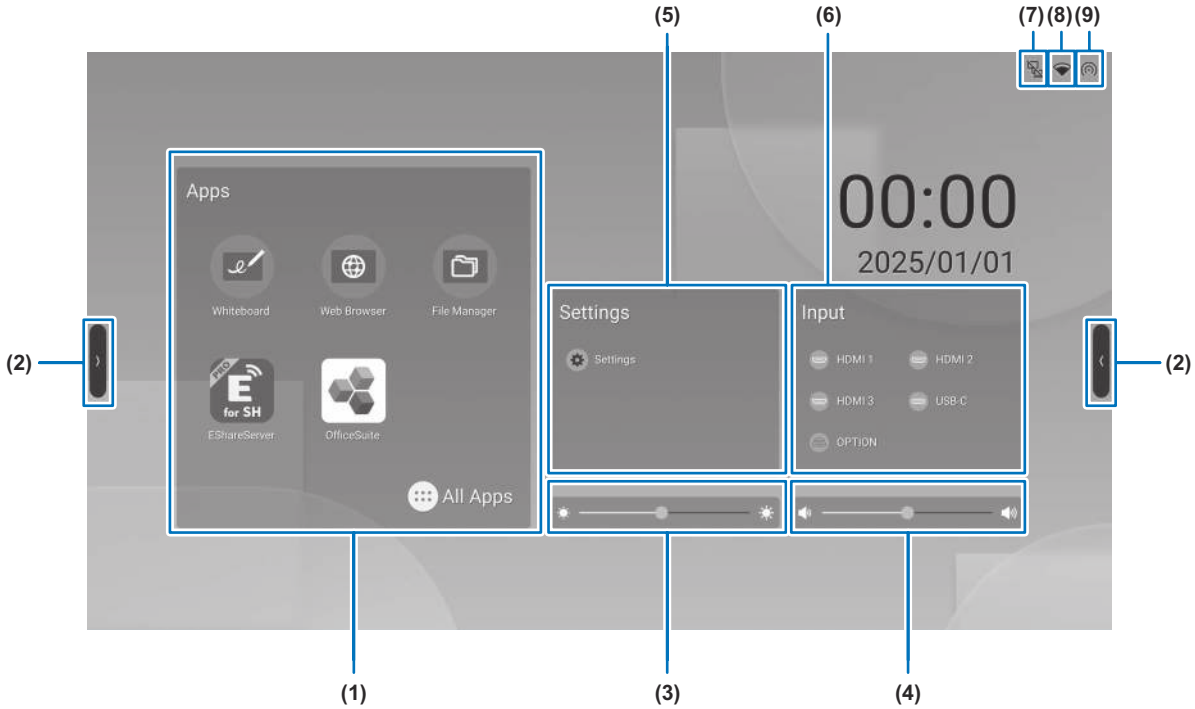

(1) Start “Whiteboard”. (See page 30.)

Start “Web Browser”. (See page 40.)

Start “File Manager”. (See page 36.)

Start “EShareServer”. (See page 35.)

Start OfficeSuite.
For details, refer to the help and other documents of OfficeSuite.

Display the list of applications.

- Start “Whiteboard”. (See page 30.)
- Start “Web Browser”. (See page 40.)
- Start “File Manager”. (See page 36.)
- Start “EShareServer”. (See page 35.)
- Start OfficeSuite.
  For details, refer to the help and other documents of OfficeSuite.
- Take images or videos when the web camera is connected.
- Start “Updater”. (See page 42.)

(2) When you touch the screen, "〉" and "〈" appear.
Touch to view the sidebar.

Go back to previous screen.

Return to home screen.

Display a preview of the application being executed.

Start "Overlay board". (See page 28.)

Display "Control Panel". (See page 23.)

Display "Input" menu. (See page 22.)

(3) Adjust the brightness.

(4) Adjust the volume.

(5) Display the setting menu. (See page 43.)

(6) Display "Input" menu.

Input mode	Video
HDMI1	HDMI1 input terminal
HDMI2	HDMI2 input terminal
HDMI3	HDMI3 input terminal
USB-C	USB Type C port
OPTION*1	Expansion slot

When the input mode is changed, the connection with the touch panel will also be changed.
*1 Displayed when using the expansion slot on PN-LM551.

(7) Displays the connection status of the wired LAN. (See page 47.)

(8) Displays the sensitivity of the wireless LAN. (See page 47.)

(9) Displays the status of the access point. (See page 47.)

TIP

- When a confirmation screen to allow access appears when the application is started for the first time, select "Allow".

■List display of startup applications (recent app bars)

When you touch on the sidebar, display a preview of the application being executed.

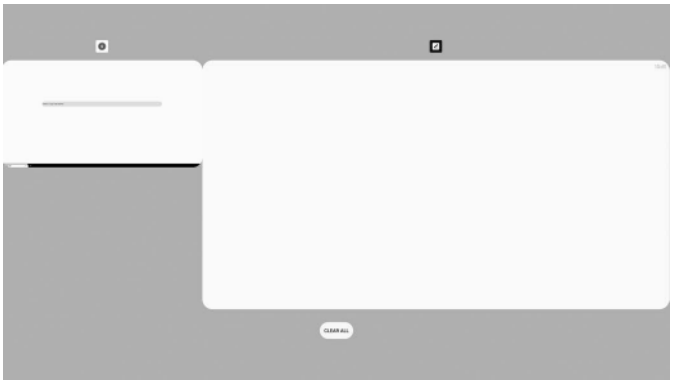

- When you touch the preview, the display switches to that application.
- Swipe up on the preview to exit the application.
- Touch and hold CLEAR ALL to exit all applications.

■Control Panel

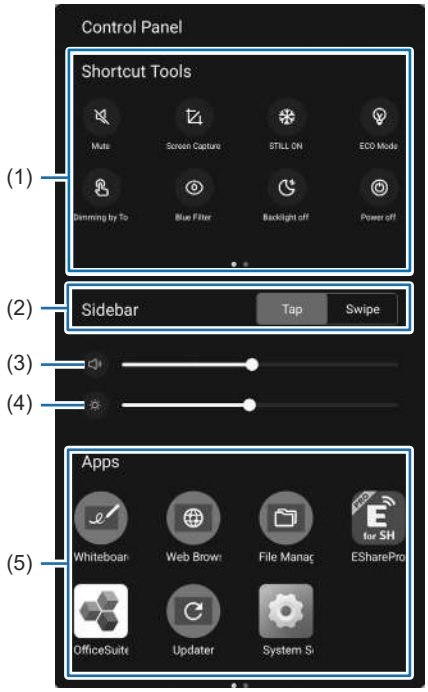

(1) Shortcut Tools

Various operations can be performed.

: Temporarily mutes audio.
Touching again will return it back to the original volume.

: Save the image of the display of the dragged area, or import it in to the Whiteboard.

: Displays a still image of what is displayed on this monitor. (See page 29.)

: Turning this on will fixate the screen brightness to 25. This turns off when you adjust the screen brightness.

: Turning on will dim the screen brightness when touched. Reduces screen brightness during operation. The screen will return to the original brightness about 5 seconds after being touched.

: Turns the low blue light display on/off.

: Turn off the screen display (backlight off) and output only the sound.

: Turn off this monitor.

: Restart the unit.

: Turns off the power of the expansion slot device.

(2) Sidebar

Set how the sidebar is displayed.

Tap: Touch the screen.

Swipe: Swipe inward from the outside of the screen (from either left or right).

(3) Adjust the volume.

(4) Adjust the brightness.

(5) Apps

Display the applications installed on this monitor.

Using the remote control unit

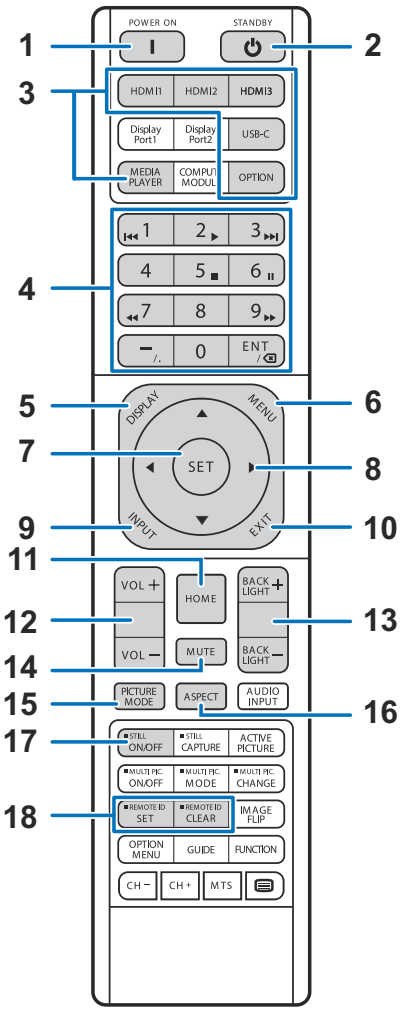

The buttons with no explanation are not used with your monitor model.

1. POWER ON
Turn on the power.

2. STANDBY
Puts this monitor into standby state.

3. DIRECT INPUT Buttons
Immediately changes the input to the one named on the button.
The button names reflect the factory preset name for the input.
When you press the MEDIA PLAYER button, File Manager opens. Selecting a video, image, or music file will start playback. (See page 36.)

4. Numeric input buttons
Press the buttons to set and change passwords and set the remote control number. (See page 51.)
Some buttons are used for the CEC function.
The – (hyphen) button is the same means as ". (dot)". The ENT button works as backspace.

5. DISPLAY
Displays monitor information.

The display changes from "INFORMATION1" → "INFORMATION2" → disappears the display, and so on every time you press this button.
When displaying "INFORMATION", the display changes from "INFORMATION1" → "INFORMATION2" → "INFORMATION1", and so on every time you press the ▶ button.
Pressing the EXIT button disappears the display.

- The display disappears automatically after about 15 seconds.

6. MENU
Displays and turns off the menu screen. (See page 43.)

7. SET
Confirms the setting.

8. Cursor
These buttons are used to perform operations such as selecting items, changing adjustment values, and moving the cursor.

9. INPUT (Input mode selection)
Opens and closes the INPUT menu.
The input names reflect the factory preset name for the input unless they are manually renamed in the OSD menu.

10. EXIT
Returns to the previous screen.

11. HOME
System main screen button.

12. VOLUME +/- (Volume adjustment)
Press + or - to adjust the volume.

13. BACKLIGHT +/- (Brightness adjustment)
Press + or - to adjust the brightness.

14. MUTE
Turns off the volume temporarily.
Press the MUTE button again to turn the sound back to the previous level.

15. PICTURE MODE
Select a picture mode.

PICTURE MODE	PURPOSE
NATIVE	Standard setting.
RETAIL	Bright, vivid colors ideal for advertising and branding.
CONFERENCING	Lower color temperature and optimized for natural human complexions.
HIGHBRIGHT	Maximum backlight brightness with higher color temperature for brighter ambient environments.
TRANSPORTATION	Maximum backlight brightness with high contrast to read text under all conditions.
CUSTOM	Custom setting.

16. ASPECT
Select the image aspect ratio. (See page 27.)

17. STILL ON/OFF
Freezes the video shown on the monitor.
In some cases a residual image may occur. Do not freeze the video for a long time.

18. REMOTE ID
If there is another monitor nearby, you can change the remote control number to prevent the other monitor from being operated by the remote control unit. (See page 51.)

■Setting the Aspect Ratio

Select the image aspect ratio in “Aspect” of “Advanced” on the Picture menu.
The aspect ratio changes from “Normal” → “Full” → “Wide” → “1:1” → “Zoom”→ “Normal”, and so on every time the ASPECT button on the remote control unit.

Aspect ratio of image	Unchanged view*1	Recommended selection for picture aspect		Description
4:3	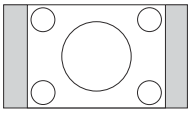	Normal	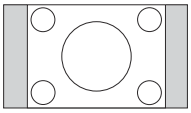	Reproduces the aspect ratio that is sent from the source.
Squeeze	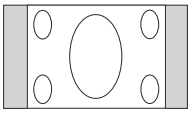	Full	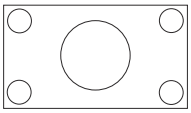	Fills the entire screen.
Letterbox	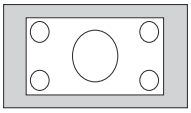	Wide	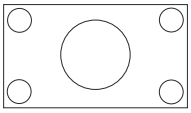	Expands a 16:9 letter box signal to fill the entire screen.

*1 Gray areas indicate unused portions of the screen.

“1:1”: Shows the image in a 1 by 1 pixel format.
“Zoom”: The zoom function increases the image size, which expands the image beyond the active screen area. The parts of the image outside the active screen area are not shown.

TIP

- When used with a screen aspect ratio different from that of the original signal, distortion will occur on the screen.
  Example: When the input signal is 4:3 and this function is set to “Full”, the screen will be horizontally wide.

NOTE

- Using this function to compress or expand the screen for commercial or public viewing in establishments like cafes or hotels may infringe on the rights of the creators, as protected by Copyright Law, so please be careful.

Overlay board (Annotation)

You can draw characters or lines on the images being displayed on this monitor.

Touch on the sidebar.

In this application, the data of one screen is referred to as a “sheet”.
A maximum of 20 sheets can be opened.

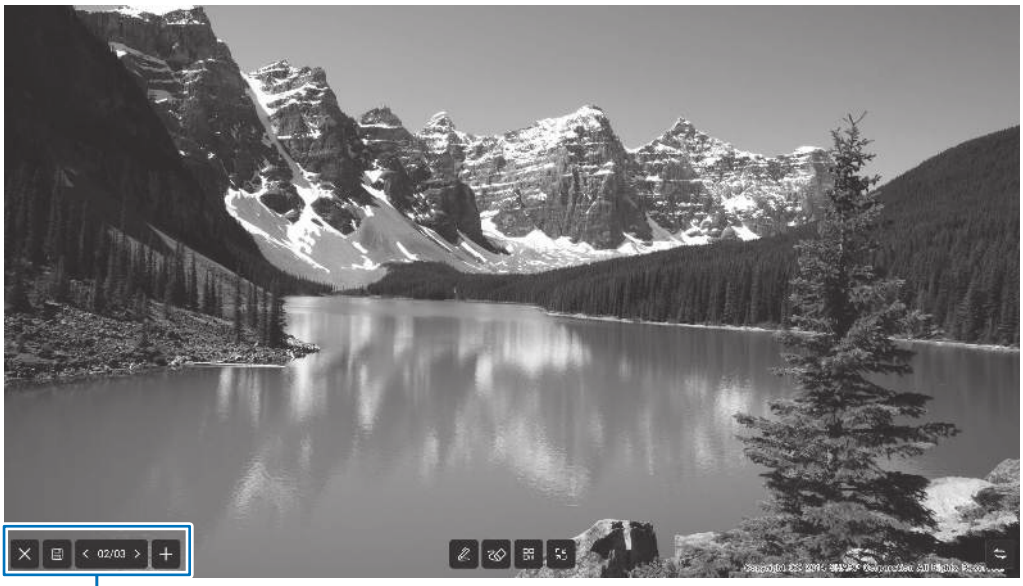

: Switches the display position to the left and right.

Tool	Function
	Draws a line. You can change the settings (color, opacity, thickness).
	Erase a line that you drew. : The lines in the touched areas will be erased. : The lines in the dragged area will be erased. Lines will be completely erased if even some of their portions are contained inside the said area. : All lines on the sheet will be erased. Slide the switch to the right.
	Display an image of the screen that is currently displayed on this monitor on a device such as a smartphone via the internet. Scan the QR code displayed. A password can be requested when displaying image. Touch “Encryption” and enter the displayed password.
	Minimize the overlay board. The minimized overlay board can be redisplayed by touching sidebar.
	Add a sheet.
02/03	Shows the current sheet number and the total number of sheets. You can change the sheet displayed with or .
	Save the sheet as an image file or PDF file. Data will be stored in “/Annotation”.
	Exit the application.

You can erase an area of the screen that you touch with your palm.
Touch the screen with your palm, and when the cursor is appear, move your palm.

TIP

- Cannot be saved when HDCP-compliant images input from the HDMI input terminal / USB Type-C port / OPS are being displayed.

Freeze

Freezes the video shown on the monitor.

Either press the STILL ON/OFF button, or touch on the sidebar and touch .

In the case of a still image, is displayed at the top left of the screen.

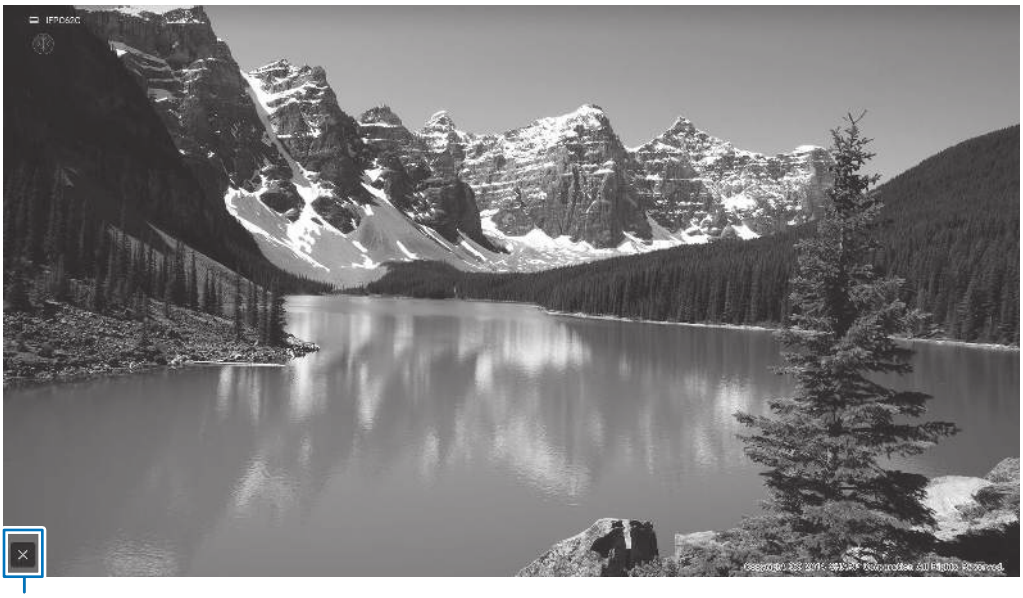

Settings window

Settings window:

Touch to operate.

Cancel the still state.

NOTE

- In some cases a residual image may occur. Do not freeze the video for a long time.

TIP

- If you want to mute the audio from a still image, set “Mute with STILL ON” on the General menu to on.
- To cancel, press any button other than the POWER button, MUTE button or VOLUME button on the remote control unit. Freeze is also canceled when the input signal changes (switching to no signal, changing the resolution, etc.).

Whiteboard

- You can write letters or draw lines on the screen as a whiteboard.
- You can print or save content written on the screen.
- You can display an image or PDF file, and write/draw letters and lines on the image.
- In this application, the data of one screen is referred to as a “sheet”.
- A maximum of 20 sheets can be opened.

1. On the home screen, touch “Whiteboard”.

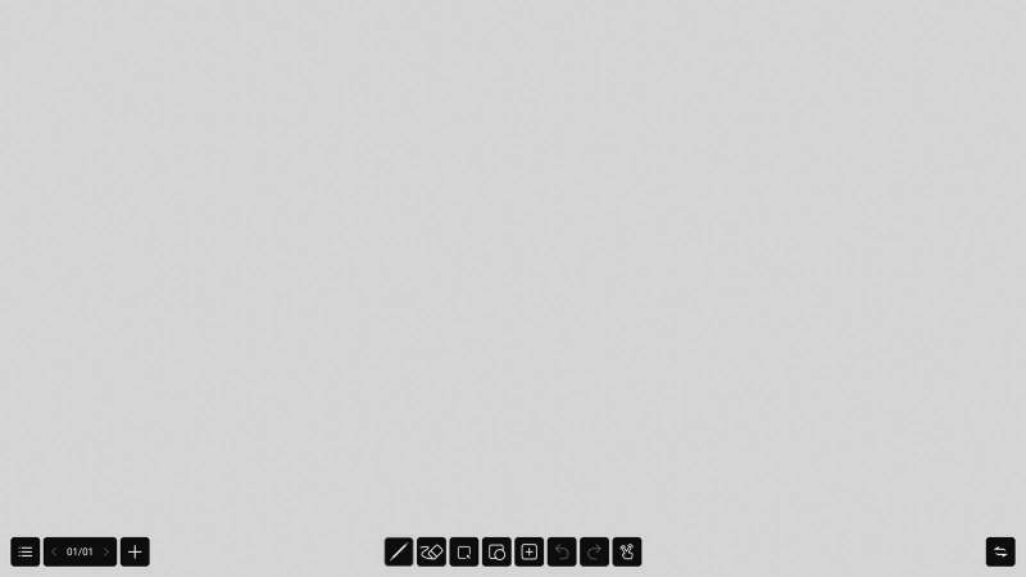

NOTE

- When the power is turned off, any data in Whiteboard is lost.
- A message is displayed before the power turns OFF. Save any data you need.

■Function list

Tool	Function
	Draw lines. (See page 32.)
	Erase a line that you drew. (See page 32.)
	Select a drawn line. (See page 33.) You can move, zoom in on, or zoom out on the selected line.
	Draw a figure. (See page 33.) After selecting a figure, drag an area to include the figure.
	Insert the file on the sheet. You can also call up an application. (See page 33.)
	Undo the previous drawing or edit. You can repeat undo a maximum of 20 times.
	Redo an undone action.
	Selects the behaviors of the multi-finger operation. It changes every time you touch it. When set to off, each can be used for drawing (maximum 20). When set to on, it can be zoomed in/out by pinching. The display position can be moved by dragging it with 3 fingers.
	The menu will appear. Touch again to close the menu.
	Close the current whiteboard and create a new whiteboard. A message appears if the current whiteboard has not been saved. Save the whiteboard you need.
	Open the whiteboard.
	Save the whiteboard.
	Save the whiteboard as a different whiteboard.
	Display an image of the screen that is currently displayed on this monitor on a device such as a smartphone via the internet. Scan the QR code displayed. A password can be requested when displaying image. “Encryption” is set to on and enter the displayed password.
	Print a sheet. (See page 41.)
	Change the settings of this application. (See page 34.)
	Exit this application.
01/01	Shows the current sheet number and the total number of sheets. You can change the sheet displayed with < or >. Touching this will zoom out all sheets. The sheet can be moved or deleted.
	Add a new sheet behind the currently displayed sheet.
	Switches the display position of the menu and sheet number to the left and right.

Drawing

The side of the touch pen (supplied) that is touching the screen, enabling the two sides to be used as different pens.

1. Touch .

The line setting (color, thickness, opacity, nib) can be changed.

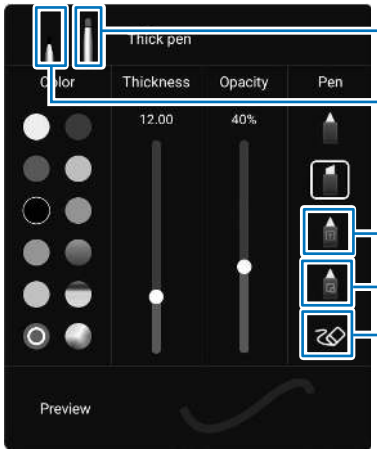

Configure the settings for drawing with the thick nib of the touch pen (supplied) or finger.

Configure the settings for drawing with the thin nib of the touch pen (supplied).

Recognizes and formats the drawn characters.*1

Recognizes and formats the drawn figures. *2

Erasing a drawn line.

2. Draw.

TIP

- Depending on the drawn shape, it may not be correctly formatted.
  - *1 Write the characters in one line. Even if you write characters in multiple lines, they will be formatted in one line.
    The recognized characters differ depending on the “Language” setting of “Language & keyboard” in the System menu.
  - *2 Recognizes circles, arrow lines, triangles, and rectangles.
    Arrows, triangles, and rectangles will not be recognized if drawn diagonally. Draw it horizontally or vertically, and rotate it after it is recognized.

Erasing a drawn line

1. Touch .

: The lines in the touched areas will be erased.

: The lines in the dragged area will be erased.
Lines will be completely erased if even some of their portions are contained inside the said area.

: All lines on the sheet will be erased.
Slide the switch to the right.

You can erase an area of the screen that you touch with your palm.
Touch the screen with your palm, and when the cursor is appear, move your palm.

Selecting a drawn line

Select a drawn line.
You can change the color of selected lines, as well as copy, delete, move, enlarge/reduce, and rotate them.

1. Touch .
2. Select a line. (See below.)

Selection method:

Touch a line.

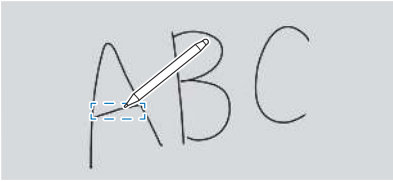

Trace over the line you wish to select.

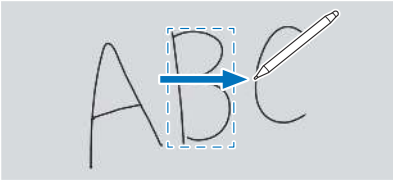

Enclose the line you wish to select.

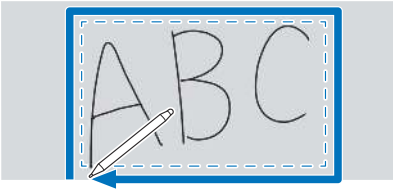

Opening a file or application on the current sheet

Depending on memory usage and other factors, it may not be possible to open a file even if it is in a supported format.

1. Touch .
2. Insert.

: Insert an image file.

: Set the number of rows and columns and insert the table.
The table width and height are automatically adjusted when drawn within the table.
When drawing from within the table, the drawn content is recognized as part of the table.
Rows and columns can be added by selecting the table using the selection tool.

: The ruler appears. A line can be drawn according to the ruler.

: Insert a Brainstorming Tool.

: The Web Browser appears.
Long pressing an image displayed in the Web Browser will incorporate the image into the sheet.

: Transfers the screen of a mobile device such as a smartphone and incorporates it into the sheet.

Opening a file

Data of this application that is saved is opened as a new whiteboard.
The current whiteboard closes. The whiteboard data that is not saved is lost.

1. **Touch , .**
   If the current whiteboard has not been saved, a confirmation screen is appear. If you need it, touch “Yes” and save.
2. **Select the file.**

Saving

You can save the whiteboard to this monitor’s built-in memory (internal memory) or to a USB flash drive.
You can save in formats other than the source file format such as in a PDF or an image format.

TIP

- When you save a sheet in PDF format or image, the sheet cannot be re-edited using this application.

Save as new

1. **Touch , .**
2. **Specify the file name, save format, and save location (when connected to a USB flash drive).**
3. **Touch “Save”.**

TIP

- Data will be stored in “/whiteboard”.

Overwrite

Data that have not been saved even once in the source file format will be saved as new.

1. **Touch , .**
2. **Touch “Yes”.**

Settings

1. **Touch , .**
2. **Configure the setting.**
   Time display switch:
   Configures whether or not to display the time on the upper right area of the screen.
   Background Settings:
   Set the whiteboard background.

Wireless Display (EShare)

- You can display the image of another device on the same network on this monitor. Connect the monitor (with a wireless adapter connected) and the device to the access point of the network or wireless router.
  You can write/draw letters and lines on the image displayed on this monitor using Overlay board.
- Software must be downloaded to the other device. For details, see below.
- Connections to all devices is not guaranteed.

Supported devices:

Windows	Windows 10 or later
ChromeOS*1	Eshare: ChromeOS version 126 or later*2 Must support Google Play. Google Cast: ChromeOS version 126 or later
macOS	macOS v12 or later
Android*1	Android 9 or later
iOS/iPadOS*1	iOS 15 or later iPadOS 15 or later

*1: Touch operation cannot be used.
*2: Audio cannot be sent.

■Wireless LAN connection settings

"Wireless LAN" on the Network menu is set to on and connect to an access point. (See page 47.)

■Start EShareServer

To use this application, it is necessary to authenticate. Uses the Internet for authentication. Therefore, when starting this application for the first time, connect this monitor to the Internet.

1. Touch in the home screen.

■Display the image that appears on the other device

The following explanation uses Windows (device) as an example.

1. Access the address shown in EShare on the monitor with your browser, and download the software to the other device whose image is to be displayed.
A warning screen may be displayed, but continue downloading.

2. Install and start the software you downloaded.

3. Check the name of the display shown in EShare on the monitor and click "Connect".

4. Select "Share screen".
- You can select "Screen Mirror" (Windows) or "TV Mirror" (Android) to display the image that appears on the monitor on the other device.
- The other device connects to the monitor, and the image from the other device appears on the monitor.

5. Start Overlay board.
You can draw on the displayed image and save the displayed image.

TIP

- When "Access point" on the Network menu is ON, Miracast cannot be used.
  If "Access point" is turned ON, "Miracast:" in "Settings" of this application will be turned OFF.
  When "Miracast:" is turned ON, "Access point" will be turned OFF.
- The manual for this application can be downloaded from our website. (Provided only in English.)
  https://business.sharpusa.com/product-downloads (US)
  https://www.sharp.eu/download-centre (Europe/Asia/Pacific)

File Manager

Manages the files and folders in the internal storage and the USB flash drive connected to the monitor.
You can also display or play back the files.

1. On the home screen, touch "File Manager".

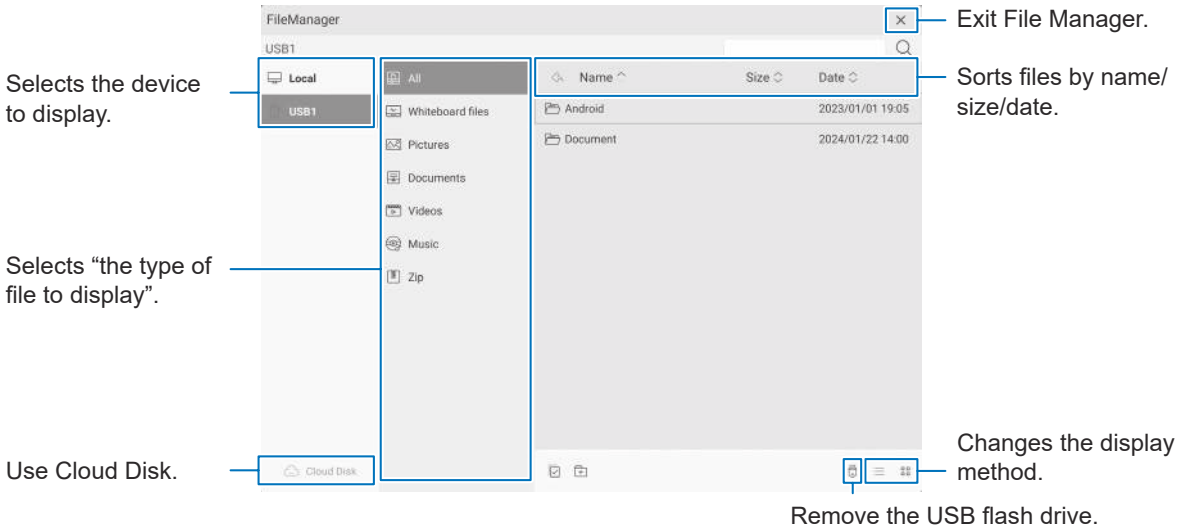

■File operation

Creating a new folder

1. Touch .

A dialog box for the input of the folder name appears.

2. Input the folder name.

3. Once input is complete, touch "OK".

Copying/Moving

1. Display the file/folder to be copied/moved.

2. Touch to select the file/folder to be copied/moved.

- You can even select multiple files/folders.
  You can select all files/folders with at the bottom.

3. Touch or .

"Type of file to display" other than "All" will no longer be displayed.

4. Display the file list of the copy/move destination.

- Select the destination folder for copying to or moving to.

5. Touch .

The file/folder is copied/moved.

Deleting

1. Display the file/folder to be deleted.

2. Touch to select the file/folder to be deleted.

- You can even select multiple files/folders.
  You can select all files/folders with at the bottom.

3. Touch .

A confirmation screen appears.

4. Touch "OK".

Renaming

1. **Display the file/folder to be renamed.**
2. **Touch to select the file/folder to be renamed.**
3. **Touch .**
4. **Enter the new name, and then touch “OK”.**

Using Cloud Disk

1. **Touch Cloud Disk .**
   The supported cloud disk services will be displayed.
2. **Select a cloud disk service and log in to the service.**
   The cloud disk will be added to the device field.

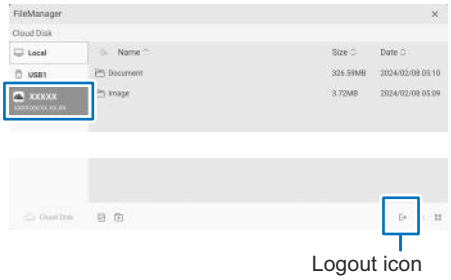

- When touch the file, the file will be copied to the “Local” - “Cloud Disk download” folder. The file cannot be displayed / played directly.
- When finished, touch to log out of the cloud disk service.

■File display/playback

Image files

(1) Starts the slide show.
Ends the slide show.
(2) Plays the previous/next files.
(3) Rotates the image by 90°.
(4) Configures the slide show
Configures whether to repeat playbacks.
Configures the playback interval.

Music/video files

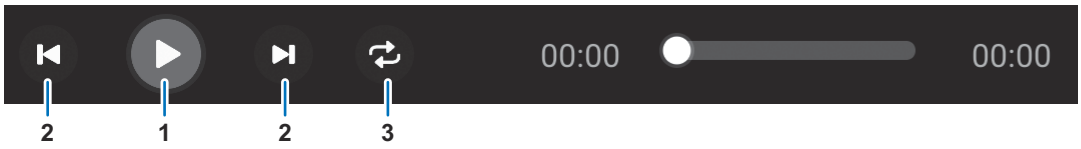

(1) Plays the file. Pause the playback.
(2) Plays the previous/next files.
(3) Sets the playback order or repeat mode.
It changes every time you touch it.

Sequentially plays the files on the same folder, and when the last file is played, it starts all over from the first file.

Repeatedly plays the file that is currently being played.

Sequentially plays the files on the same folder in ascending order.

Sequentially plays the files on the same folder in descending order.

Randomly and repeatedly plays the files on the same folder.

TIP

- When image, music, and video files are in the same folder, they will be played in mixed order based on file names.
  To play only one type of file, such as images, music, or videos, store them in separate folders.

■Supported formats

The types of files that can be played are as follows.
(Not all files are guaranteed to be played back.)

Image files

Extension	Max. resolution
*.bmp	4096×4096
.jpg (.jpeg)	4096×4096
*.png	4096×4096

Music files

Extension	Audio coding	Sample rate	Bit rate
*.aac	AAC-LC	8k - 48kHz	16k - 576kbps
*.mp3	MPEG1/2 layer3		8k - 320kbps
*.ogg	Vorbis	8k - 48kHz	8k - 500kbps
*.wav	LPCM	8k - 192kHz	16, 24, 32bit

Video files

Extension	Video coding	Audio coding	Max. resolution	Maximum bit rate
.3gp (.3GP2)	MPEG-4 (Simple Profile Level 3)	AAC-LC,AAC+, Enhanced AAC+, Enchanced Low Delay AAC, AMR-NB, AMR-WB	1920×1080@60fps	80Mbps
	H.263 (Baseline profile level 30 and level 45)		1920×1080@60fps	20Mbps
	H.264 (Main, High, High10@Level 6.0)		4096×2160@30fps	40Mbps
*.mkv	MPEG-2 (MP @HL)	AAC-LC, FLAC, MP3, Vorbis, Opus	1920×1080@60fps	80Mbps
	MPEG-4(Simple Profile Level 3)			
	H.263 (Baseline profile level 30 and level 45)		1920×1080@60fps	20Mbps
	H.264 (Main, High, High10@level 6.0)		4096×2160@30fps	40Mbps
	H.265 (Main/Main10 Profile, High Tier @Level 6.1)		4096×2160@60fps	50Mbps
	vp8		1920×1080@60fps	20Mbps
	vp9 (Profile 0 (420 8bit), Profile 2 (420 10bit))		3840×2160@60fps	20Mbps
*.mp4	MPEG-2 (MP @HL)	AAC-LC, AAC+, Enhanced AAC+, Enhanced Low Delay AAC, USAC, FLAC, MP3, Vorbis, Opus	1920×1080@60fps	80Mbps
	MPEG-4 (Simple Profile Level 3)			
	H.263 (Baseline profile level 30 and level 45)			20Mbps
	H.264 (Main, High, High10@Level 6.0)		4096×2160@30fps	40Mbps
	H.265 (Main/Main10 Profile, High Tier @Level 6.1)		4096×2160@60fps	50Mbps
*.webm	vp8	Vorbis, Opus	1920×1080@60fps	20Mbps
	vp9 (Profile 0 (420 8bit), Profile 2 (420 10bit))		3840×2160@60fps	
*.ts	MPEG-2 (MP @HL)	AAC-LC	1920×1080@60fps	80Mbps
	H.264 (Main, High, High10@level 6.0)		4096×2160@30fps	40Mbps

- For installation in portrait orientation, prepare content that is in portrait orientation.

Web Browser

View the website.

1. On the home screen of APPLICATION mode, touch “Web Browser”.

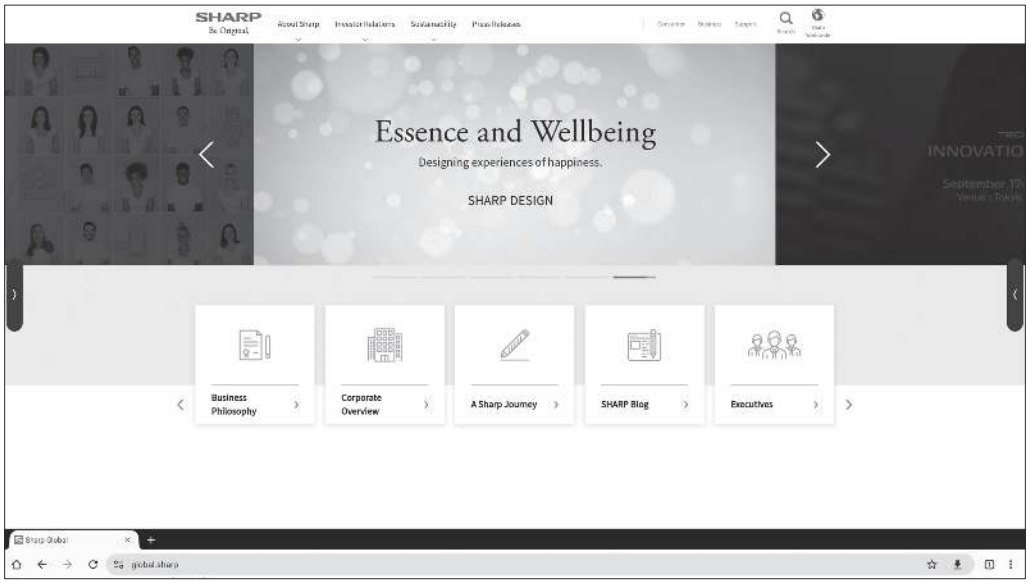

Exiting

Close the Web Browser from the recent app bar.

TIP

- The manual for this application can be downloaded from our website. (Provided only in English.)
  https://business.sharpusa.com/product-downloads (US)
  https://www.sharp.eu/download-centre (Europe/Asia/Pacific)
- If a large-sized website is displayed, the Web Browser may close.
- If the application does not work properly, make sure that the date and time are set correctly.
- A password is required when changing the Web Browser setting. (Factory setting) (See page 48.)

NOTE

- Take proper care when browsing websites.
  In a malicious website, the input contents may be stolen and fraudulent applications may be downloaded.
  If a fraudulent application is installed, it may result in a virus infection or stealing of communication details.
- Be sure to log out from a website that you have used by logging in.
  If you remain logged in, your personal information such as the ID may be known by a third person.
- Once an app is added to the device and installed, it cannot be manually removed by the user using normal methods.

Printing

You can print with SHARP MFP that supports the Sharp Print Service Plugin on the same network on this monitor.

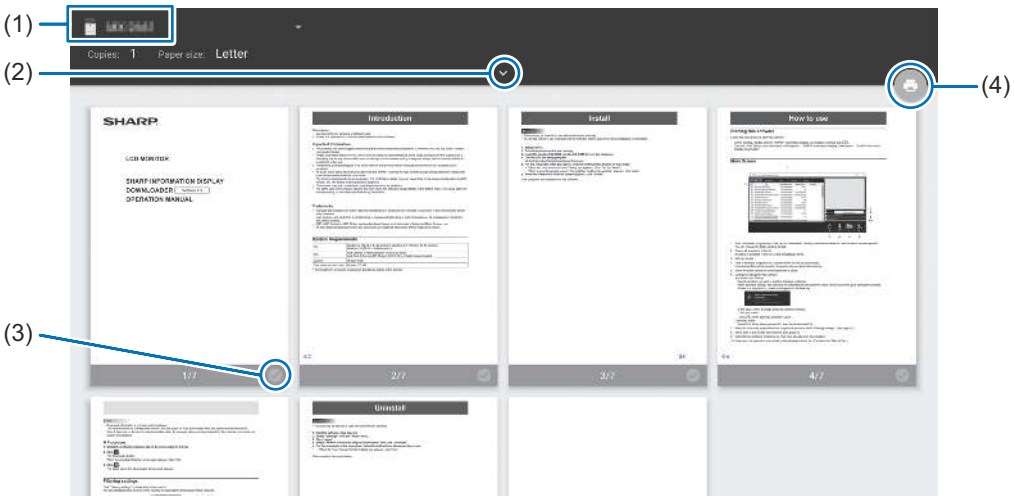

(1) Select an MFP with .
(2) Set the printing settings.
(3) Check the page to you want to print.
(4) Print.

Updating the Software (Updater)

Update software that are factory-installed in home screen. (A network environment that allows access to the internet is required.)
On the home screen, touch “All Apps”, and then touch “Updater”.
When you use Updater, a password is required. (Factory setting) (See page 48.)
The “Export Law Assurances” appears. Select “OK”.
To use the software distributed by the Updater, you must agree to the “Export Law Assurances”.

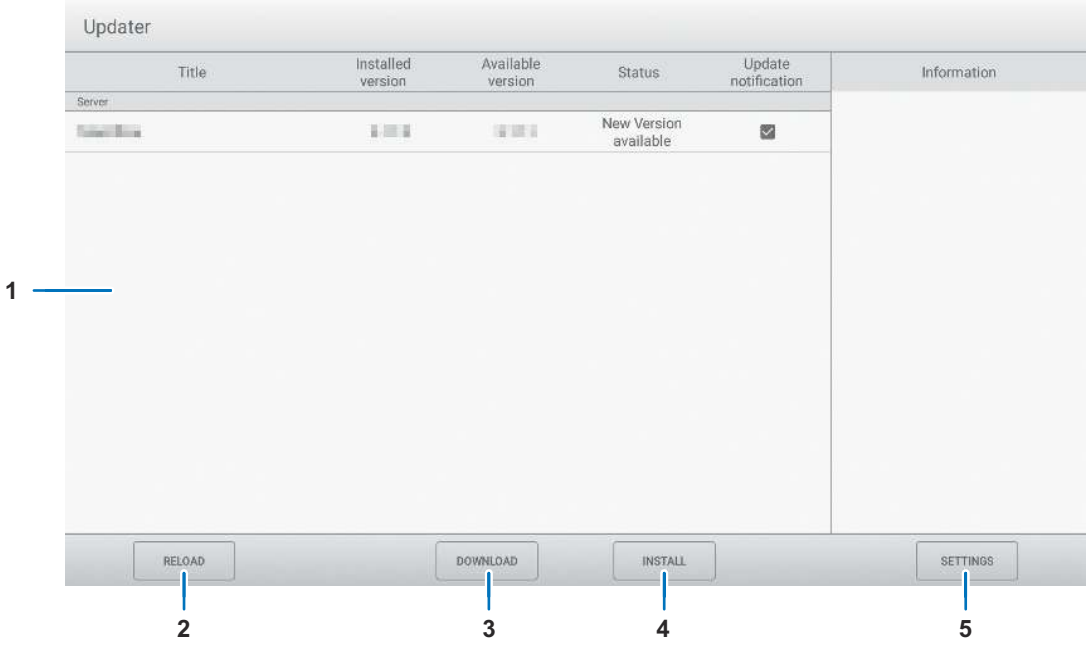

1. **Information area**
   Shows information on already downloaded software and software that can be downloaded.
   Update notification: Displayed when “Notify new versions” is set to on. Update of software that unchecked will not be notified.
2. **RELOAD**
   Refresh the information in the information area.
3. **DOWNLOAD**
   Download the selected software.
4. **INSTALL**
   Install the selected software.
5. **SETTINGS**
   Configure settings for Update.
   - Hide updated items ..... Set whether or not to hide updated softwares in the information area.
   - Notify new versions ..... Set whether or not to display a message if updated software exists.
   - Scheduled installation ..... Set whether or not to update the software automatically.
   - Scheduled installation day ..... When “Scheduled installation” is set to on, set the day of week to update the software automatically.
   - Scheduled installation time ..... When “Scheduled installation” is set to on, set the time to update the software automatically.
   - About Updater. ..... Display the information of this application.
   - Reset..... Initialize the “SETTINGS”.

Menu Items

Displaying the menu screen

Video and audio adjustment and settings of various functions are enabled. This section describes how to use the menu items. See page 44 for details of each menu items.

TIP

- The menu will differ depending on the input mode.
- Items that cannot be selected (such as functions that do not work with the current input signal) are displayed in gray.

■ Example of operation from the remote control

(Adjust the “Contrast” in the Picture menu.)

1. **Press the MENU button to display the menu screen.**

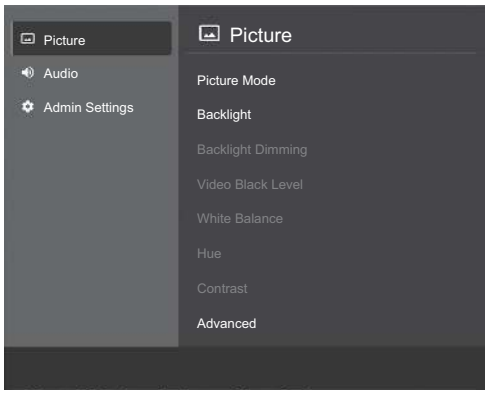

2. **Press the ▲ or ▼ button to select Picture, and press the SET button.**
3. **Press the ▲ or ▼ button to select Contrast.**

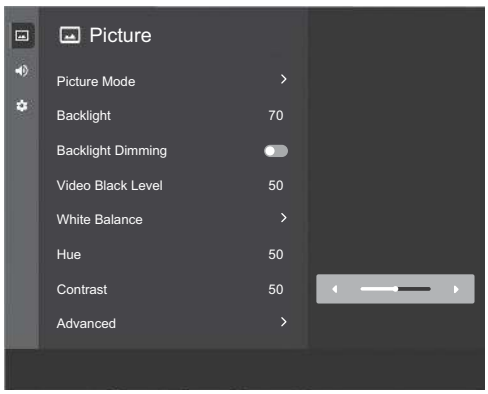

4. **Press the ◀ or ▶ button to adjust the setting.**

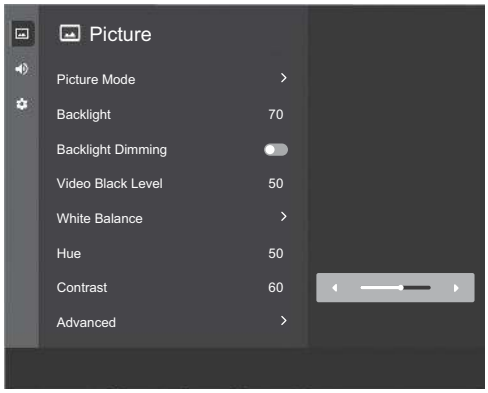

For items that have >, press the SET button, make settings and then press the EXIT button.

5. **Press the MENU button to close the menu screen.**

NOTE

- Do not turn the main power switch off while the menu items are being displayed. Doing so may initialize the settings.
- When using administrator settings menu for the first time, a screen for the set of the password appears. Set a password.
- A password is required in the following cases. A screen for the input of the password appears.
  - When setting the administrator settings menu
  - When changing the Web Browser setting
  - When using Updater

■ Example of operation from home screen

Touch to operate.

1. **On the home screen, touch “System Settings”.**

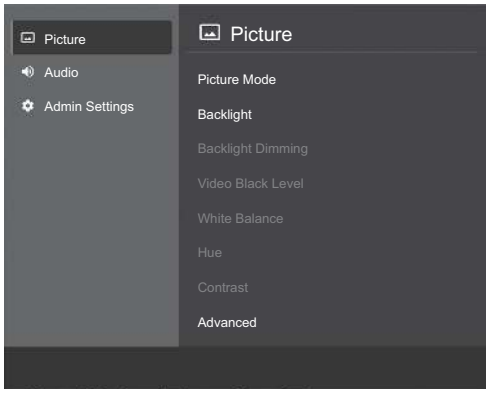

2. **Set each item.**
3. **When the setting is complete, touch anywhere outside the menu on the screen.**
   The menu will close.

Menu item details

The menu will differ depending on the input mode.
The settings below are recommended settings and conforms to the “Normal Configuration” as defined in the EcoDesign Regulation (2019/2021).

- Power Save Settings - Mode : Low Power
- Power Save Settings - Quick Start : OFF
- Human Sensing - Mode : Disable

■ Picture

Picture Mode

Provides pre-configured picture settings suitable for various environments where this device may be used, or customize settings to viewer preference. (See page 26.)

Backlight

Adjusts the backlight brightness.

Backlight Dimming

When set to “ON”, gain compensation and backlight dimming are performed.

Video Black Level

Adjusts the entire brightness of the video signals.

White Balance

Selects the white balance.

Hue

Adjusts the hue. Selecting + changes the color towards green, and selecting - changes it towards magenta.

Contrast

Adjusts the difference between the bright and dark portions of the image.

Advanced

Sharpness

Adjusts the sharpness of the image.

Aspect

Select the image aspect ratio.

Ambient Light Sensing (when control kit is installed)

When set to on, the brightness of the monitor is automatically adjusted in response to changes in room brightness.

InBright: Illuminance ..... Set the upper limit for room brightness.
Backlight ..... Set the display brightness for when the room brightness is at the upper limit.
InDark: Illuminance ..... Set the lower limit for room brightness.
Backlight ..... Set the display brightness for when the room brightness is at the lower limit.
Status..... Displays the current illuminance and backlight levels.

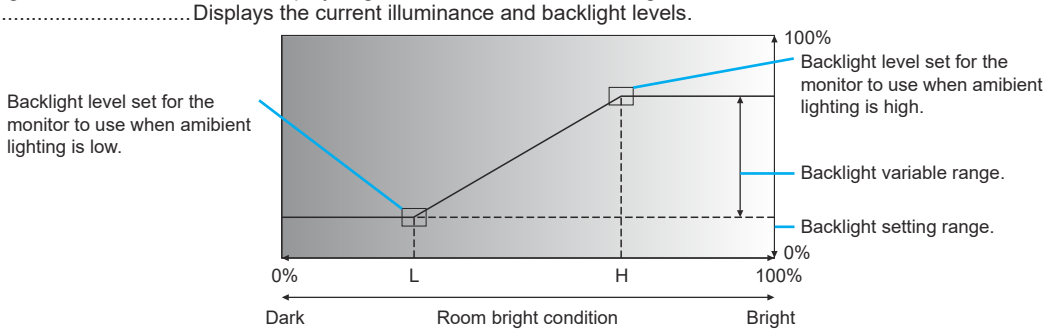

L - Illuminance level set for the monitor to use when ambient lighting is low.
H - Illuminance level set for the monitor to use when ambient lighting is high.

Reset

Resets the values of the Picture menu items to the factory default settings.
For the settings saved for each “Picture Mode”, the settings saved for the currently selected “Picture Mode” are initialised.
Select “ON” and then press the SET button.

■ Audio

Audio Mode
Provides pre-configured audio settings suitable for various environments where this device may be used, or customize settings to viewer preference. Preset values for “Volume”, “Balance”, “Treble”, and “Bass” can be set for each audio mode.
Volume
Adjusts the volume.
Balance
Adjusts the balance of the audio sound between right and left.
Treble
Adjusts the volume of treble-level sound.
Bass
Adjusts the volume of bass-level sound.
Reset
Resets the values of the Audio menu items to the factory default settings. For the settings saved for each “Audio Mode”, the settings saved for the currently selected “Audio Mode” are initialised. Select “ON” and then press the SET button.

■ Admin Settings

When using these for the first time, a screen for the set of the password appears. Set a password.
To change the settings on Admin Settings menu, it is necessary to enter the administrator password.

Input & Output

Input Change

Startup App ..... Sets which application to automatically start.
Start input mode ..... You can set the input mode that will be in effect when the power is turned on.
When this is set to “Last input mode”, the input mode when the power was last turned off will appear.
No signal auto input select..... Configures whether or not to automatically switch to a different input mode when signals become absent in the current input mode.
Connect auto input select ..... Sets whether the input into the input terminal automatically changes when a video signal is input into that terminal. (With some input signals, the input may not change.)

Input Mode Name

When set to on, for each terminal, you can change the input mode name that is displayed during input mode selection or display.

Signal Setting

HDMI Mode..... Set the HDMI mode.
USB-C Setting ..... Set USB-C.
Video Range ..... Set the range when RGB video signals are input.

Sound Setting

Audio Output..... Set whether to link the speaker volume and the audio output terminal volume.
Variable1..... You can adjust the volume from the speakers of this monitor and the audio output terminal simultaneously by using “Volume”.
Variable2..... You can adjust the volume from the audio output terminal by using “Volume”. Sound will not be output from the speakers of this monitor.
Fixed ..... Fixes the volume from the audio output terminal. Adjust the volume by using an external device. (See page 13.)
The speaker volume of this monitor will not be fixed.
Max Volume ..... Sets the maximum volume that cannot be exceeded.
Mute with STILL ON ..... Set whether to mute the sound when the screen is still.

CEC

HDMI CEC link..... When set to on, use the HDMI CEC function.
If the device connected to the HDMI input terminal supports CEC, the input mode of the monitor changes to HDMI when playback starts on the device.
Auto power on*..... Sets whether an external device connected via HDMI-CEC is turned off when the monitor is switched to Power off (Standby state).
Sets whether the monitor is switched to Power off (Standby state) when an external device connected to HDMI-CEC is switched off.
Set whether the monitor is turned on when an external device connected to HDMI-CEC is turned on.
*The connected HDMI-CEC compatible device may not go into standby if it is recording.
Audio Receiver ..... This can be set when “HDMI CEC link” is set to on.
If the device connected to the HDMI3 input terminal supports ARC, audio is output from the terminal.

Reset

Resets all input menu settings back to factory settings.

Schedule

Power On

Settings for configuring the power on schedule for the monitor. (See page 51.)

Power Off

Settings for configuring the power off schedule for the monitor. (See page 51.)

Reboot

Restarts the Android system at the specified time or day of the week. (See page 51.)

Overview

Shows a list of schedules configured for the monitor. (See page 51.)

Reset

Resets all schedule menu settings back to factory setting.

Network

Ethernet

Sets whether or not to use a LAN terminal. To use a LAN terminal, set the IP address, etc.

Wireless LAN

Sets whether or not to use a wireless LAN when attaching a wireless adapter. To use a wireless LAN, set the access points.
Cannot be used simultaneously with Ethernet. (See page 35.)

Bluetooth

Set whether or not to use a Bluetooth device when attaching a wireless adapter.

Access point

Sets whether or not to use this monitor as an access point when attaching a wireless adapter.
When using these for the first time, a screen for the set of the password appears. Set a password.
You can change “Access point name”, “Encryption mode” and “Password”.
You cannot use the “Wireless LAN” when using a “Access point”.

Monitor Control

Monitor Control via Network ..... Sets whether or not to control this monitor via network. (See page 13.)
S-Format and N-Format commands can be used for this monitor.
For details of each command, see the manual on the following website.
https://business.sharpusa.com/product-downloads (US)
https://www.sharp.eu/download-centre (Europe/Asia/Pacific)

User Name* ..... Sets an account name when connecting to this monitor.
Password*..... When “Use Secure Protocol for Authentication” set to off, sets a password when connecting to this monitor.
Port*..... Sets the port number to be used.
Auto Logout Time(minutes)..... Sets the time to logout automatically by minutes when there is no communication.

* When using N-Format commands, there is no need to set this if “Use Secure Protocol for Authentication” is OFF.

Use Secure Protcol for Authentication:
Set to on to use secure protocol for Authentication when connecting to this monitor.
“Use Secure Protocol for Authentication” is only available if you set “Mode” to “Normal” or turn on “Quick Start”. In this case, the power consumption in Standby State will be higher.
When set to on, sets the public key file.

Upload..... Upload the public key file to this monitor.
Download ..... Export the public key file uploaded to this monitor.
Delete..... Delete the public key file uploaded to this monitor.

This monitor supports the following public keys.
RSA(2048bit or more), DSA, ECDSA-256, ECDSA-384, ECDSA-521, ED25519

Reset ..... Initialize the “Monitor control via network” settings.

IP Address Filter

To prohibit connection to this device, set the IP address.

Reset

All network settings will be reset to the factory settings.

Protect

Power Save Settings

Power Save ..... Set whether or not to turn power saving on. When set to on and the monitor goes into power saving after the input signal is lost, it will be in the state selected in “Mode”. Set the power saving condition in “Mode”.

Time Settings..... Set the time to transition to the input signal waiting state. If the input signal is lost and the set time has elapsed, the device will enter the input signal waiting state.

Mode..... When “Low Power” is set, there is no automatic recovery even when a signal is input to the connected device. Return from low power mode via the monitor or the remote control power button, or disconnect and reconnect the device’s input signal cable.
When “Normal” is selected, the monitor turns on by detecting an input signal from a connected device.

USB Power ..... Sets the power supply to the USB Type-C port (for touch panel), USB Type-C port (USB hub), and USB port (USB hub). Set to on to supply power.

Power Save Message..... Shows a message as the monitor is entering low power mode.

Quick Start..... When set to on, this monitor recovery time will be fast when a video signal is detected, although the power consumption will increase.

Off if No Operation..... Determines whether or not to turn the monitor off when there is no operation from the remote control, RS-232C commands, or LAN commands.

Home Screen ..... When setting the time options on “Home Screen”, the monitor will turn off at the specified time.

Apps/External Input..... Set the action when a screen other than the home screen (application screen or external input) is displayed.

Protect (Continued)

Security Settings

Password ..... Input the current password to change the settings in this menu. (See page 52.)

Lock Admin Setting ..... Set whether a password is required in the following cases.

- When setting the Admin Settings menu.
- When changing the Web Browser setting.
- When using Updater.

Lock Settings

Limits the operation of the monitor and remote control. (See page 52.)

* If you press and hold the DISPLAY button on the remote control for more than 5 seconds, the Monitor Lock and Remote Control Lock are deactivated.

Advanced

User Apps Installation ..... Sets whether or not the installation of apk application files is allowed.

Application Lock..... Enables or disables the availability of some of the monitor's pre-installed applications. Any application that is turned ON will become unavailable.

Enable USB Drive..... Sets whether or not to allow the use of a USB flash drive.

USB Port Select..... Specify the setting for the USB hub connection when the input mode is changed. (See page 13.)

Auto ..... The connection automatically changes when the input mode changes.
HOME..... Fix the connection to HOME mode.
HDMI1/2/3 ..... Fix the connection to the device connected to the TOUCH PANEL terminal.
USB-C ..... Fix the connection to the device connected to the USB Type C port (for touch panel).
OPTION..... Fix the connection to the option board (with optional board installed).

Hide Android ..... When set to on, HOME mode can no longer be selected.

Reset

Resets all protect menu settings back to factory setting.

Setup

Home Screen Settings

Sets the icons, such as applications to be arranged on the home screen.

Human sensing (with control kit is installed)

Human Sensing ..... Automatically adjusts the backlight and volume levels based on whether or not a human presence is detected in front of the monitor.

Auto Off ..... Detects when there is no human presence, and when a set time has elapsed, the power is automatically turned OFF. When a person is near the monitor again, the monitor will automatically return to normal mode.

Disable..... Human sensing function is off.

Custom ..... Detects when there is no human presence, and when a set time has elapsed, the screen brightness, volume, and input will automatically return to the settings made in "Backlight", "Volume", and "Input Select". When the presence of a person is detected, the screen brightness, volume, and input will automatically return to their original "current settings".

BackLight..... When set to on, the backlight brightness level is changed when the monitor does not detect a human presence during the period set for "Waiting Time".

Volume..... When set to on, the function changes the volume when the monitor does not detect a human presence during the period set for "Waiting Time".

Input Select..... When set to on, the input signal is changed when the monitor does not detect a human presence during the period set for "Waiting Time".

Waiting Time ..... This is the period of time the monitor should wait for a human presence before activating the Human Sensing mode selected in this menu.

Printer

Opens the printer settings.

Advanced

This menu contains settings for adjusting some of the monitor's hardware options and communication and identification format.

Power Indicator..... Specifies whether to light the power LED.

Touch Operation Mode ..... Select the touch mode.
This setting cannot be configured when this monitor and computer are not connected via USB.

Auto ..... It operates by automatically distinguishing respectively finger touch and pen touch.
Touch Screen Mode..... It operates without distinguishing finger touch and pen touch.
Mouse Mode..... It operates in mouse mode. The mouse pointer is displayed.

Monitor ID ..... Set the ID number used in the ID mode of the remote control on the monitor. (See page 51.)
The monitor ID is used also as the ID in an N-Format command.

Reset

Resets all setup menu settings back to factory setting.

Application

This menu manages the installed applications.

System

This menu provides a range of settings for configuring various aspects of the monitor functions for user preferences, keeping the monitor up to date, adding security credentials, performing a factory reset, etc.

Date and time/Set time

Use 24-Hour Format ..... Sets whether or not to display the time in the 24-hour format.
Automatic Date & Time ..... Sets whether or not to set the data & time automatically via network.
Set date ..... Sets the date. Displayed when “Automatic Date & Time” is turned OFF.
Set time..... Sets the time. Displayed when “Automatic Date & Time” is turned OFF.
Date format ..... Sets the display format for the date.
Time Zone..... Sets the time zone.

Language & Keyboard

Language..... Sets the display language for the screen.
Virtual Keyboard ..... Selects the keyboard to display on the screen.
Physical Keyboard ..... Select the layout of a connected physical keyboard.

OSD

Screen Rotation ..... Select the installation direction of the monitor.
- Landscape..... Landscape orientation
- Portrait..... Portrait orientation

Sidebar ..... Sets whether or not to display the sidebar.
Logo Screen ..... Sets whether or not to display the logo screen.
Startup Animation ..... Sets whether or not to display the animation when turning the power on.
Wallpaper..... Sets the background of the home screen.
Shutdown Message ..... Sets whether or not to display a confirmation message when the power off is executed.

System Update

System Update ..... Confirms the firmware version and updates the firmware.
- Current Version ..... Displays the current firmware version.
- Update..... Updates the monitor firmware from a connected USB drive containing a firmware file. Press “Check” to initiate the update.

Security

Security..... This menu provides the options for installing, viewing, and removing the digital certificates used for ensuring secure and encrypted online communication.
- Trusted Credentials..... This menu displays the trusted credentials installed for the system and user.
- User Credentials ..... Displays the user credentials.
- Install From Storage..... Installs a file from the connected storage.
- Clear credentials ..... Deletes all credentials.

Reset

All system settings will be restored to the factory defaults.

All Reset

All items are returned to factory shipment state.
In HOME mode, only the settings of the factory-installed software will be initialized.
Any custom installed software will not be removed.

About

Displays the information of this monitor.

Monitor Information

Shows the model name, serial number and firmware version of the monitor.

Legal Information

Displays the legal information.

TIP

- When Ambient Light Sensing is turned ON, Backlight Dimming cannot be set.
- When Backlight Dimming is turned ON, Ambient Light Sensing cannot be set.
- Do not cover the optional sensor unit when “Ambient Light Sensing” is enabled.
- Even if you perform an “All Reset” on this monitor , the OPS installed on the expansion slot will not be reset.
- The “Date & Time” needs to be set before adding schedules.
- Each schedule must be set at an interval of 6 minutes or more.
- Up to 15 different schedules can be created.
- Power consumption by a device connected to this port depends on the USB device.
- 3rd party applications of this type are not guaranteed to work and are outside the scope of support and warranty.
- Always verify the authenticity and safety of an application before installation. Some applications may affect the operation of other applications and of this monitor. Virus infections or, data corruption, falsification, or theft is possible.
- The selection of which settings to copy is reset to default if the monitor’s main power is turned off.
- The Mute Setting is released in the following cases:
  - Changing the input signal.
  - When the main power switch is turned off/on
  - When turned off/on with the POWER button
  - Returning the unit from power save.
  - When the “Audio Mode” is changed
  - When the volume is changed using the remote control or the unit keys
  - Changing the video signal (resolution/scanning frequency).
- This function may not work depending on the application or MediaPlayer contents.
- When performing an “System Update”, connect a USB flash drive to the unit’s USB terminal for HOME mode.
- After updating the system to the latest version, it cannot be restored to a previous version.
- When “Auto Off” or “Custom” is selected in “Human Sensing”, “Start input mode” cannot be set.
- When the monitor is controlled via a network, there are the following restrictions on use.
  - After turning the power on or off, you need to wait at least 2 minutes before performing the next control.
  - The monitor control via network connection will be disconnected when the mode switches to “networked standby mode”, so reconnecting is required.
  - Before performing power control of the monitor using “Use Secure Protocol for Authentication”, you need to set “Mode” to “Normal”.

■ Schedule

You can set the time to switch the monitor on and off.

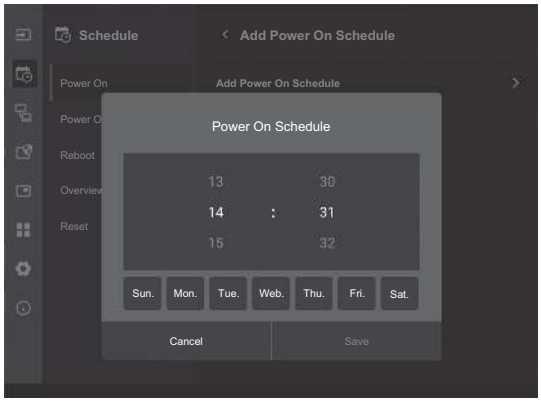

First, display “Schedule” from the Admin Settings menu. (See page 46.)

Turning on the power at a specified time

1. **Touch “Add Power On Schedule” under “Power On”.**
2. **Select the time you want to specify.**
3. **Touch the day of the week you want to specify.**
4. **Touch “Save”.**

Turning off the power at a specified time

1. **Touch “Add Power Off Schedule” under “Power Off ”.**
2. **Select the time you want to specify.**
3. **Touch the day of the week you want to specify.**
4. **Touch “Save”.**

Reboot at a specified time

1. **Touch “Add Reboot Schedule” under “Reboot”.**
2. **Select the time you want to specify.**
3. **Touch “Save”.**
   Android system can be restarted at the specified time.

Displaying a list of set schedules

1. **Touch “Overview” under “Schedule”.**
2. **Touch the schedule you want to change.**
   If you want to change the time, etc., or delete a schedule, you can do so from the details screen.

TIP

- Do not switch off the main power after setting the schedule.
- The Date and time/Set time needs to be set before setting the Schedule. (See page 49.)
- Each schedule must be set at an interval of 6 minutes or more.
- Up to 15 different schedules can be created.
- To ensure stable operation, the Android system needs to be restarted once a day.

■ About remote control numbers

If there is another monitor nearby, you can change the remote control number to prevent the other monitor from being operated by the remote control unit.
Set the same number in the monitor and in the remote control unit.

TIP

- You can set remote control numbers to values from 0 to 25.
- When the remote control unit batteries become exhausted and when you replace the batteries, the number on the remote control unit may be reset to 0.

Changing the remote control number on the monitor

This is set in “Monitor ID” in the Admin Settings menu. (See page 48.)

Set the remote control number on the remote control side

1. **While pressing the REMOTE ID SET button on the remote control, press the numbers for the remote control number.**
   - The number that can be set is between 0 and 25. Enter the numbers without any gaps.
   - If set to “0”, all displays can be operated, regardless of the remote control number on the display side.
2. **Release the REMOTE ID SET button.**
   The remote control number is set on the remote control unit.

Checking the remote controller number

1. **Press the REMOTE ID SET button on the remote control unit.**
   The remote control number will appear on this monitor.
   If it appears in red, the remote control numbers on this monitor and remote control unit match.
   If it appears in white, the remote control numbers do not match.

TIP

- To disable the remote control number on the remote control side, press and hold the REMOTE ID CLEAR button for more than 5 seconds.

■ Security Settings

Normally, anyone can operate the display using a remote control or buttons on the display's control panel. By setting security and locking the device, you can prevent unauthorized persons from using the device or changing its settings.

Setting the device password

Set a password if necessary. (See page 48.)

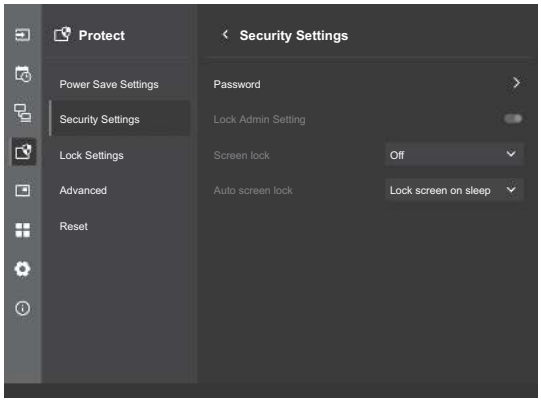

1. **Select "Protect" → "Security Settings" → "Password".**
2. **Enter the administrator password and press "OK".**
   You will now be able to set each item in "Security Settings".
3. **To change the password, press "Change Administrator Password" and enter the current password in "Current Password".**
4. **Enter a new password in "New Password" and enter it again in "Confirm Password".**
   The new password will be saved.

Enable security using a password

1. **Select "Protect" → "Security Settings" → "Lock Admin Setting".**
2. **Select the type of "SECURE MODE".**

TIP

- To access the Admin Settings menu, you must enter the administrator password.
- Be sure to keep your password safe so you do not forget it.

Limiting the operation of the monitor and remote control

The operation of the monitor and remote control can be limited. (See page 48.)

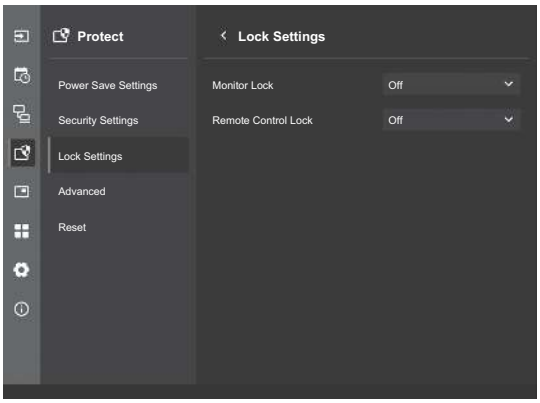

Monitor Lock

The operation of the monitor can be limited.

1. **Select "Protect" → "Lock Settings" → "Monitor Lock".**
2. **Select the effective scope of the lock.**
   - Off ..... Enables operation.
   - All buttons ..... Locks monitor buttons operation.
   - Touch ..... Locks touch operation.
   - All buttons & touch ... Locks monitor buttons and touch operation.
3. **Press the MENU button on the remote control.**
   Close the menu.

Remote Control Lock

Button operation using the remote control can be limited.

1. **Select "Protect" → "Lock Settings" → "Remote Control Lock".**
2. **Select the effective scope of the lock.**
   - Off ..... Enables operation.
   - All buttons ..... Locks remote control buttons operation.
   - Except power & volume... Locks operations other than power operation and VOLUME +/-.
3. **When the setting is complete, touch the screen anywhere outside of the menu.**
   Close the menu.

Unlocking

If you press and hold the DISPLAY button on the remote control for more than 5 seconds, the Monitor Lock and Remote Control Lock are deactivated.

Troubleshooting

If you are experiencing any problem with your display, before calling for service, please review the following troubleshooting tips.

There is no picture or sound.

- Is the power cord disconnected? (See page 14.)
- Is the main power switch off? (See page 17.)
- Is the monitor in input signal waiting state or standby state (the power LED is flashing in green, lit in orange, flashing in orange, and lit in red)? (See page 17.)
- Is an input mode selected that is appropriate for the input terminal to which the cable is connected? (See page 22 and page 25.)
- If any external equipment is connected, make sure the equipment is operating (playing back).
- For USB-C, is the “USB-C Setting” correctly configured for the specification of the cable and computer being used?

Remote control does not work.

- Are the batteries inserted with polarity (+,-) aligned? (See page 15.)
- Are the batteries exhausted?
- Point the remote control unit toward the monitor’s remote control sensor. (See page 15.)
- Are remote control operations restricted? (See page 52.)

The remote control unit’s buttons for operating the HDMI connected device do not work.

- Is “HDMI CEC link” set to on under “Input & Output” on the Admin Settings menu?
- Switch to a different input mode, and then try switching the input mode back to HDMI.

There is a picture but no sound.

- Is the sound muted?
- Make sure the volume is not set to minimum.
- Are audio cables connected properly?
- Is the audio output set correctly?
- Is a USB speaker or Bluetooth speaker connected?
- Is Mute with STILL ON set to on?

Unstable video.

- The signal may be incompatible.

The video from the HDMI input terminal does not appear properly.

- Does the HDMI cable support 4K, and is it HDMI standard compliant? The monitor will not work with cables that are not standard compliant.
- Is the input signal compatible with this monitor? (See page 57 and page 58.)
- If the connected device does not support 4K, set “HDMI Mode” to “Mode2”.

The video from the USB Type-C does not appear properly.

- Is the input signal compatible with this monitor? (See page 57 and page 58.)
- Please try changing the lane settings of the “USB-C Setting”. (See page 46.)

Control buttons do not work.
There is no picture.

- Load noises from outside may be interfering with normal operation. Turn off the main power and turn it on after waiting at least 5 seconds, and then check the operation.

The input mode changes automatically.

- When “Connect auto input select” is “ON”, the input mode automatically changes to that terminal when a video signal is input into the input terminal.
  For this reason, the input mode may change when the computer wakes up from system standby.
- When “No signal auto input select” is other than “Off”, the mode changes to the set input mode automatically if there is no longer a video signal input.
  The input mode may change in the following cases:
  - When a computer is in standby state.
  - When video play is stopped with a playback device.
- Is “HDMI CEC link” set to on? (See page 46.)

Can not be controlled via LAN or RS-232C.

- Are the LAN settings set correctly?
- In the case of LAN, is “Monitor Control” set to on? Are “User Name”, “Password”, and “Port” correct?

The touch panel does not respond.

- Is the USB cable connected properly?
- Are touch pens that are supplied touch pens?
- Is there anything attached to the screen?
  Something attached to the screen may prevent correct operation.

The response of the touch panel is slow.
Some parts of the screen do not respond.
A different place is touched.

- Is the screen exposed to direct sunlight or other strong light? The touch panel uses infrared rays and thus may not operate correctly.
- Is there an obstacle between the infrared transmitter/receiver and the touch pen or your finger? An obstacle will prevent correct operation. If your fingers or a sleeve are too close to the screen, correct operation will not be possible.
- Is the infrared transmitter/receiver dirty? Gently wipe off any dirt with a soft cloth.
- If the touch panel is touched with a small tip less than about 1/16 inch (2 mm) x 1/16 inch (2 mm), the touch may not be detected by infrared and correct operation will not take place.
- Do not touch the touch panel when turning on the monitor. If you touch the touch panel, this may be detected as an element failure in the infrared transmitter/receiver and incorrect operation will result.
- Set the screen size to “Wide”. (See page 27.)
- Is there interference with another display? Changing the placement or orientation may resolve the problem.

The screen is dark.
- When the internal temperature of the monitor rises excessively, the brightness of the backlight automatically decreases in order to prevent a further temperature rise.
- Remove the cause of the excessive temperature rise.

Incorrect touch.
- If the display resolution and desktop resolution are different (e.g., this monitor receives a 16:9 signal, but the desktop shows a 4:3 aspect ratio with black bars on the left and right), then the touch function may not work correctly. If changing the screen size by SIZE function doesn't resolve the issue, try using a 16:9 desktop resolution on the connected device.
- If the monitor is used in portrait orientation, the touch position may not match with an OS other than Windows.

The monitor makes a cracking sound.
- You may occasionally hear a cracking sound from the monitor. This happens when the cabinet slightly expands and contracts according to change in temperature. This does not affect the monitor's performance.

Power LED is flashing in red.
- When the internal temperature of the monitor rises excessively, the brightness of the backlight decreases automatically in order to prevent high-temperature-related problems. If the brightness drops due to abnormal temperature, the power indicator will flash red, and will continue to flash red even if the unit transitions to power standby state.
- Remove the cause of the excessive temperature rise.
  - If the monitor enters standby state due to a rise in temperature, to return to normal display, turn the power switch off and then back on again. The monitor, however, will enter standby state again if the cause of the temperature rise is not eliminated. (See page 7.)
  - Check whether the monitor is placed at a location where a quick rise in temperature is likely. Internal temperature rises quickly if the vents on the monitor are blocked.
  - Internal temperature rises quickly if dust accumulates inside the monitor or around the vents. Remove dust if possible. Ask SHARP dealer about removing internal dust.

No sound is heard from the speaker.
Mic cannot be used.
Web camera cannot be used.
- Check if another device is connected via the USB or Bluetooth.
- If more than one equivalent devices are connected, they will be used in the following order:
  USB > Bluetooth (speaker only) > HDMI(ARC)(speaker only) > Internal (speaker only)
- Remove unnecessary devices.
- The mic of the Bluetooth headset cannot be used. This monitor does not support HSP/HFP.
- Is another application using the device? The device may not work at the same time in multiple applications. In this case, close the application.
- Do not switch the input mode while using the device. The connection will change according to the input mode switching, so speaker, mic or camera may not be recognized correctly and may not operate.
  In this case, turn this monitor or device power off and then on.

The Bluetooth device cannot be connected.
The connection with the Bluetooth device is lost.
- Connect the USB extension cable (commercially available) to the USB port for HOME mode, and connect the wireless adapter (supplied) to the USB extension cable (commercially available). Place the wireless adapter (supplied) where it can be seen from the front of this monitor.

USB hub cannot be used.
- Are "Enable USB Drive" set to "ON" and "USB Port Select" set to "Auto" in "Advanced" of "Protect" in "Admin Settings"?
- Is "USB Power" set to "Auto" in "Power Save Settings" of "Protect" in "Admin Settings"?

Specifications

■Product Specifications

Model		PN-LM551	PN-LM431
LCD component		55" Class [54-5/8 inch (138.78 cm) diagonal] TFT LCD	43" Class [42-1/2 inch (107.99 cm) diagonal] TFT LCD
Max. resolution (pixels)		3840 x 2160	
Max. colors		Approx. 1.07 billion colors	
Pixel pitch		0.315 mm (H) × 0.315 mm (V)	0.245 mm (H) × 0.245 mm (V)
Brightness (typical)		500 cd/m^2 *1	
Contrast ratio (typical)		5000 : 1	4000 : 1
Viewing angle		178° right/left/up/down (contrast ratio ≥ 10)	
Screen active area inch (mm)		47-5/8 (W) x 26-13/16 (H) (1209.60 x 680.40)	37-1/16 (W) x 20-13/16 (H) (941.18 x 529.42)
Response speed (standard value)		6.5ms (Gray to Gray, Ave.)	
Plug and play		VESA DDC2B	
Input terminals	Video / Audio	HDMI x 3 USB Type-C x 1: Used also for touch panel	
	Serial (RS-232C)	D-sub 9 pin x 1	
	For control kit	3.5 mm mini stereo jack x 1	
Output terminals	Video / Audio	HDMI x 1	
	Audio	3.5 mm mini stereo jack x 1	
USB port		USB 3.0 Type-A x 3 / USB 3.0 Type-C x 1 / USB 2.0 Type-A x 1	
LAN terminal		10 BASE-TX/100 BASE-TX/1000 BASE-T	
System	OS	Android 14	
	CPU	Arm Cortex-A73 processor x 4, Cortex-A53 processor x 4	
	Memory	4 GB	
	Storage	32 GB	
Wireless LAN		IEEE802.11ax/ac/n/a/g/b compliant Encryption mode: WPA/WPA2/WPA3	
Bluetooth		5.3 compliant Supported protocols: A2DP, AVRCP, GATT, HID	
Expansion slot		18V, 3.6A (power supplied when expanding the functions with an optional part)	---
Speaker output		10 W + 10 W	
Touch Panel	Detection method	Infrared blocking detection method	
	Computer connector	USB 3.0 Type-B x 1 / USB Type-C x 1: Used also for video and audio	
Power requirement		AC 100 V - 240 V, 3.2 A - 1.3 A, 50/60 Hz	AC 100 V - 240 V, 2.6 A - 1.1 A, 50/60 Hz
Operating temperature*2*3		41°F to 95°F (5°C to 35°C)	
Operating humidity*3		20% to 80% (no condensation)	
Storage temperature		-4°F to 140°F (-20°C to 60°C)	
Storage humidity		10% to 80% (no condensation)	
Power consumption*4 (Max / networked standby mode*5 / standby mode*6 / off mode)		145 W (285 W/2.0 W/0.5 W/0.0 W)	110 W (230 W/2.0 W/0.5 W/0.0 W)
Dimensions inch (mm) (excluding protrusions)		Approx. 49-13/16 (W) x 2-7/8 (D) x 28-15/16 (H) (1265 x 73 x 736)	Approx. 39-1/8 (W) x 2-7/8 (D) x 22-15/16 (H) (994 x 73 x 582)
Weight lbs. (kg)		Approx. 72.8 (33)	Approx. 46.3 (21)

*1 Brightness will depend on input mode and other picture settings. Brightness level will decrease over time. Due to the nature of the equipment, it is not possible to precisely maintain a constant level of brightness. This is the brightness of the LCD panel. Brightness of product: 450 cd/m^2

*2 Temperature condition may change when using the monitor together with the optional equipments recommended by SHARP. In such cases, please check the temperature condition specified by the optional equipments.

*3 In addition, check the requirements of the computer and other devices to be connected, and make sure that all requirements are satisfied.

*4 Factory setting. (When no optional part is attached.)

*5 When no optional part is attached. Standby time until transitioning to networked standby mode: About 60 sec. (setting at the time of shipment from the factory).

*6 When no optional part is attached. Standby time until transitioning to standby mode: About 60 sec. (setting at the time of shipment from the factory).

As a part of our policy of continuous improvement, SHARP reserves the right to make design and specification changes for product improvement without prior notice. The performance specification figures indicated are nominal values of production units. There may be some deviations from these values in individual units.

■Dimensional Drawings

Note that the values shown are approximate values.

[PN-LM551]

Unit: inch [mm]

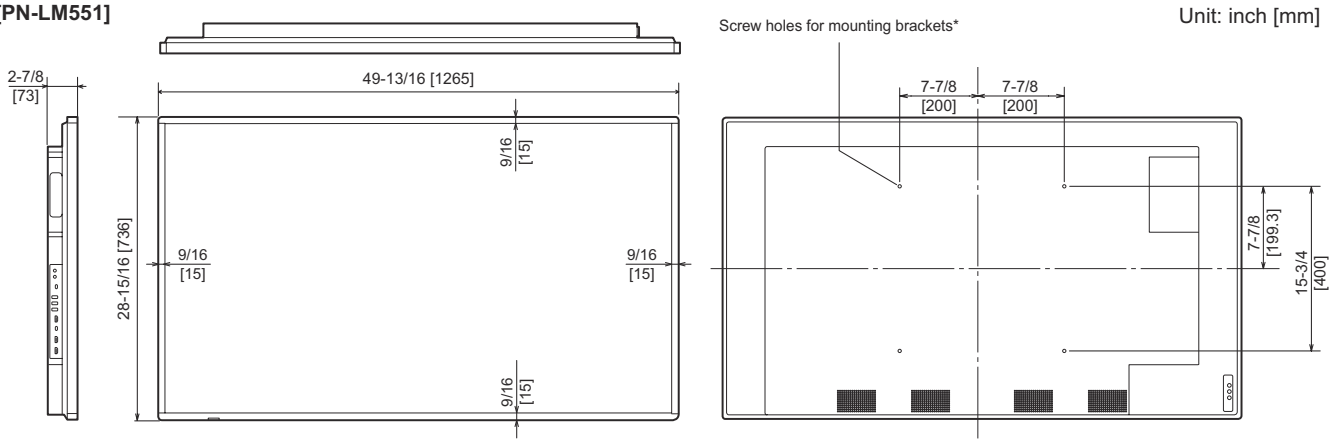

[PN-LM431]

Unit: inch [mm]

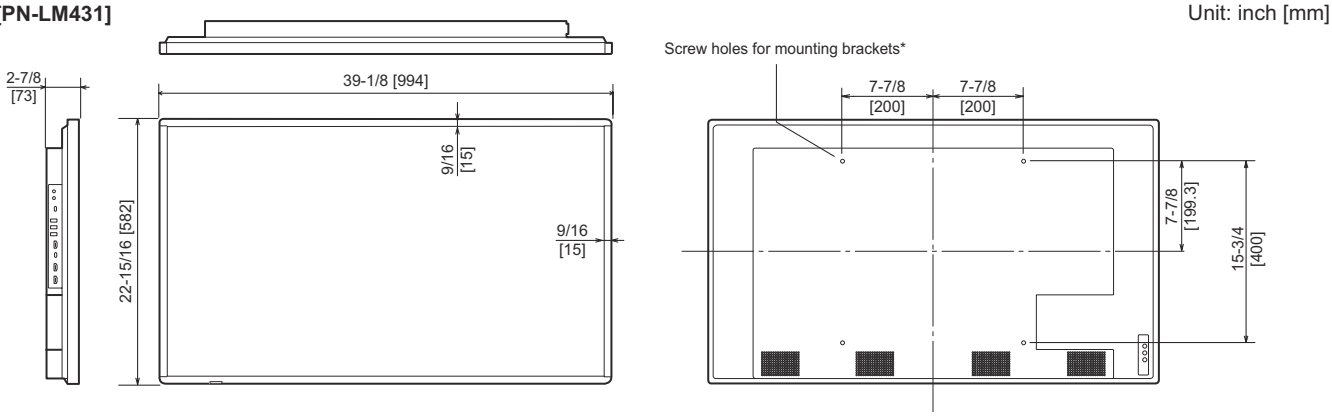

Installation with the stand (PN-LM431) (not for Europe)

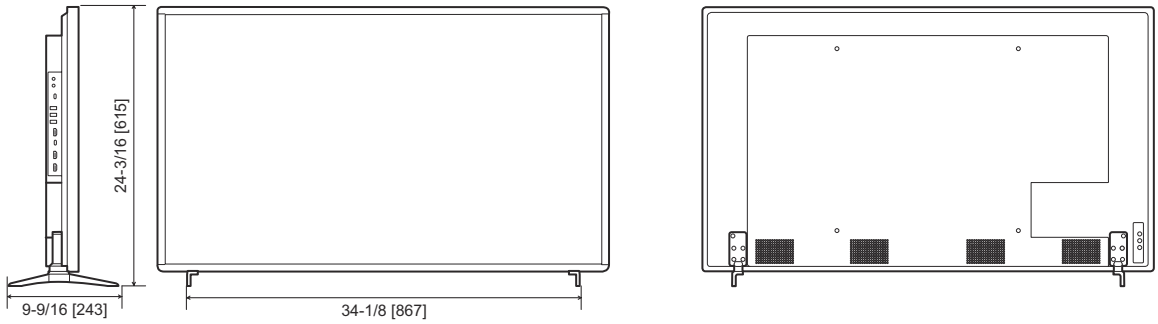

* When mounting the monitor, be sure to use a wall-mount bracket that complies with the VESA-compatible mounting method. SHARP recommends using M6 screws and tighten the screws.
Note that screw hole depth of the monitor is 3/8 inch (10 mm). Loose mounting may cause the product to fall, resulting in serious personal injuries as well as damage to the product. The screw and hole should come together with over 5/16 inch (8 mm) length of thread. Use a bracket which has been approved for UL1678 standard, and which can endure at least 4 times or more the weight of the monitor.

■DDC (plug and play)

The monitor supports the VESA DDC (Display Data Channel) standard.
DDC is a signal standard for plug and play between monitors and computers. Information about resolution and other parameters is exchanged between the two. This function can be used if the computer supports DDC and it has been configured to detect plug-and-play monitors.
There are several types of DDC, depending on the communication method used. This monitor supports DDC2B.

■Compatible signal timing (PC)

Screen resolution		Vsync	HDMI		USB-C
			Mode1	Mode2	
VESA	640 × 480	60Hz	Yes	Yes	Yes
	800 × 600	60Hz	Yes	Yes	Yes
	1024 × 768	60Hz	Yes	Yes	Yes
	1280 × 960	60Hz	Yes	Yes	Yes
	1280 × 1024	60Hz	Yes	Yes	Yes
	1440 × 900	60Hz	Yes	Yes	Yes
	1680 × 1050	60Hz	Yes	Yes	Yes
Wide	1280 × 720	60Hz	Yes	Yes	Yes
	1920 × 1080	60Hz	Yes	Yes	Yes
	3840 × 2160	24Hz	Yes	Yes	Yes
		25Hz	Yes	Yes	Yes
		30Hz	Yes	Yes	Yes
		50Hz	Yes	-	Yes
		60Hz	Yes	-	Yes
	4096 × 2160*1	24Hz	Yes	Yes	Yes
		25Hz	Yes	-	Yes
		30Hz	Yes	-	Yes
		50Hz	Yes	-	Yes
		60Hz	Yes	-	Yes
US TEXT	720 × 400	70Hz	Yes	Yes	Yes

*1 Displays a reduced image, except in “1:1”. In “1:1”, the image will be cut down to panel size then displayed.

- Depending on the connected computer, images may not be displayed properly even if the compatible signal described above is input.

■Compatible signal timing (AV)

Screen resolution	Frequency	HDMI	
		Mode1	Mode2
4096 × 2160p	24Hz	Yes	Yes
	25Hz	Yes	-
	30Hz	Yes	-
	50Hz	Yes	-
	59.94Hz	Yes	-
	60Hz	Yes	-
3840 × 2160p	24Hz	Yes	Yes
	25Hz	Yes	Yes
	30Hz	Yes	Yes
	50Hz	Yes	-
	59.94Hz	Yes	-
	60Hz	Yes	-
1920 × 1080p	24Hz	Yes	Yes
	50Hz	Yes	Yes
	59.94Hz	Yes	Yes
	60Hz	Yes	Yes
1920 × 1080i	50Hz	Yes	Yes
	59.94Hz	Yes	Yes
	60Hz	Yes	Yes
1280 x 720p	50Hz	Yes	Yes
	59.94Hz	Yes	Yes
	60Hz	Yes	Yes
720 × 576p	50Hz	Yes	Yes
720 × 480p	59.94Hz	Yes	Yes
	60Hz	Yes	Yes
640 × 480p(VGA)	59.94Hz	Yes	Yes
	60Hz	Yes	Yes
720(1440) × 576i	50Hz	Yes	Yes
720(1440) × 480i	59.94Hz	Yes	Yes
	60Hz	Yes	Yes

■Channels that can be used in wireless LAN (US and Canada)

Standard	Channel	Frequency band (center frequency)
IEEE802.11 b/g/n/ax	1-11ch	2412-2462MHz
IEEE802.11 a/n/ac/ax	36/38/40/42/44/46/48ch	5180-5240MHz
	52/54/56/58/60/62/64ch	5260-5320MHz
	100/102/104/106/108/110/112/116/132/134/136/140ch	5500-5700MHz
	149/151/153/155/157/159/161/165ch	5745-5825MHz

■Channels that can be used in wireless LAN (Europe)

Standard	Channel	Frequency band (center frequency)
IEEE802.11b/g/n/ax	1-13ch	2412-2472MHz
IEEE802.11a/n/ac/ax	36/38/40/42/44/46/48ch	5180-5240MHz
	52/54/56/58/60/62/64ch	5260-5320MHz
	100/102/104/106/108/110/112/116/118/120/122/124/126/128/132/134/136/140ch	5500-5700MHz

- Outdoor use of the 5 GHz band is restricted by the Radio Law.

■Channels that can be used in wireless LAN (Asia/Pacific)

Standard	Channel	Frequency band (center frequency)
IEEE802.11b/g/n/ax	1-13ch	2412-2472MHz
IEEE802.11a/n/ac/ax	36/38/40/42/44/46/48ch	5180-5240MHz
	52/54/56/58/60/62/64ch	5260-5320MHz

- Outdoor use of the 5 GHz band is restricted by the Radio Law.

Intellectual Property Rights and Other Matters

■Information on the software license for this product

Software composition

The software included in this product is comprised of various software components whose individual copyrights are held by SHARP or by third parties.

Software developed by SHARP and open source software

The copyrights for the software components and various relevant documents included with this product that were developed or written by SHARP are owned by SHARP and are protected by the Copyright Act, international treaties, and other relevant laws. This product also makes use of freely distributed software and software components whose copyrights are held by third parties. These include software components covered by a GNU General Public License (hereafter GPL), a GNU Lesser General Public License (hereafter LGPL) or other license agreement.

Obtaining source code

Some of the open source software licensors require the distributor to provide the source code with the executable software components. GPL and LGPL include similar requirements. For information on obtaining the source code for the open source software and for obtaining the GPL, LGPL, and other license agreement information, visit the following website:
https://jp.sharp/business/lcd-display/support/download/source_e.html
We are unable to answer any questions about the source code for the open source software. The source code for the software components whose copyrights are held by SHARP is not distributed.

About the MPEG-4 AVC, MPEG-4 Visual license included in this product

1. MPEG AVC
THIS PRODUCT IS LICENSED UNDER THE AVC PATENT PORTFOLIO LICENSE FOR THE PERSONAL USE OF A CONSUMER OR OTHER USES IN WHICH IT DOES NOT RECEIVE REMUNERATION TO (i) ENCODE VIDEO IN COMPLIANCE WITH THE AVC STANDARD (“AVC VIDEO”) AND/OR (ii) DECODE AVC VIDEO THAT WAS ENCODED BY A CONSUMER ENGAGED IN A PERSONAL ACTIVITY AND/OR WAS OBTAINED FROM A VIDEO PROVIDER LICENSED TO PROVIDE AVC VIDEO. NO LICENSE IS GRANTED OR SHALL BE IMPLIED FOR ANY OTHER USE. ADDITIONAL INFORMATION MAY BE OBTAINED FROM MPEG LA, L.L.C. SEE HTTP://WWW.MPEGLA.COM

2. MPEG-4 Visual
THIS PRODUCT IS LICENSED UNDER THE MPEG-4 VISUAL PATENT PORTFOLIO LICENSE FOR THE PERSONAL AND NON-COMMERCIAL USE OF A CONSUMER FOR (i) ENCODING VIDEO IN COMPLIANCE WITH THE MPEG-4 VISUAL STANDARD (“MPEG-4 VIDEO”) AND/OR (ii) DECODING MPEG-4 VIDEO THAT WAS ENCODED BY A CONSUMER ENGAGED IN A PERSONAL AND NONCOMMERCIAL ACTIVITY AND/OR WAS OBTAINED FROM A VIDEO PROVIDER LICENSED BY MPEG LA TO PROVIDE MPEG-4 VIDEO. NO LICENSE IS GRANTED OR SHALL BE IMPLIED FOR ANY OTHER USE. ADDITIONAL INFORMATION INCLUDING THAT RELATING TO PROMOTIONAL, INTERNAL AND COMMERCIAL USES AND LICENSING MAY BE OBTAINED FROM MPEG LA, LLC. SEE HTTP://WWW.MPEGLA.COM.

Mounting Precautions (For SHARP dealers and service engineers)

- When installing, removing or moving the monitor, ensure that this is carried out by at least 2 people.
- Be sure to use a wall-mount bracket designed or designated for mounting the monitor.
- This monitor is designed to be installed on a concrete wall or pillar. Reinforced work might be necessary for some materials such as plaster / thin plastic board / wood before starting installation.
- This monitor and bracket must be installed on a wall which can endure at least 4 times or more the weight of the monitor. Install by the most suitable method for the material and the structure.
- To attach a VESA-compliant mounting bracket, use M6 screws that are 5/16 inch (8 mm) to 3/8 inch (10 mm) longer than the thickness of the mounting bracket.

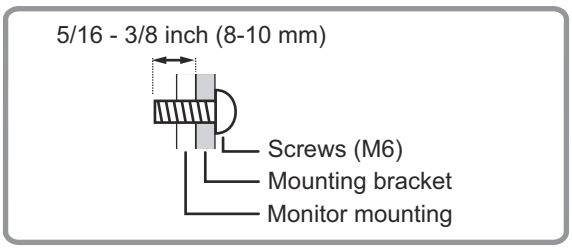

- Do not use an impact driver.
- When moving the monitor, be sure to hold the parts marked by below. Do not grasp the screen or control buttons. This may cause product damage, failure, or injury.

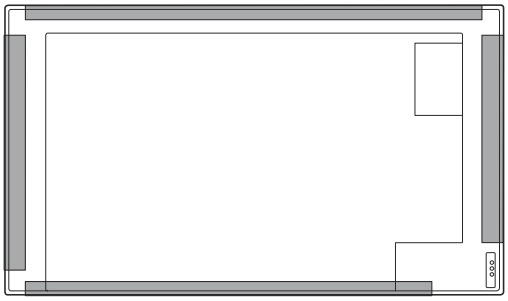

- After mounting, please carefully ensure the monitor is secure, and not able to come loose from the wall or mount.
- Do not use any screw holes other than those for mounting brackets, located on the rear of the monitor, for installation.
- If you need to temporarily place the monitor on a table or other surface during installation, spread a thick soft cloth on the table to prevent damage to the screen and table.
- When using the monitor laying flat on a surface (when the monitor is tilted more than 20 degrees upward from the perpendicular in relation to a level surface), consult an authorized dealer because there are some specific mounting conditions.

■Installing the option board (PN-LM551)

Option boards that comply with the Open Pluggable Specification (OPS) can be installed in an expansion slot.

NOTE

- If there are cables already connected, disconnect them all.

TIP

- Contact your dealer for compatible optional boards.

1. **Spread a thick, soft cloth (blanket, etc.) that will prevent damage to the LCD panel on a stable flat surface where the entire monitor can be placed, and place the monitor with the LCD panel face down on the cloth.**

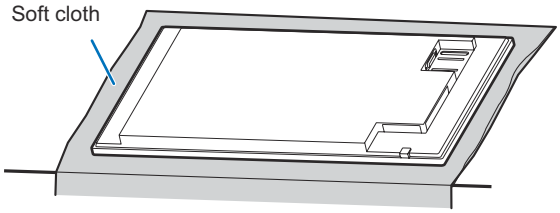

2. **Remove the screws (x2) securing the expansion slot cover attached to this unit.**

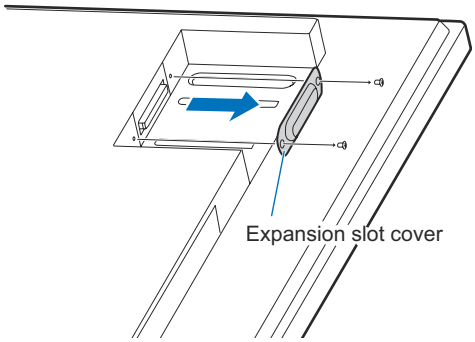

3. **Use the OPS fixing screws (x2) provided with the option board to secure the option board to the unit.**

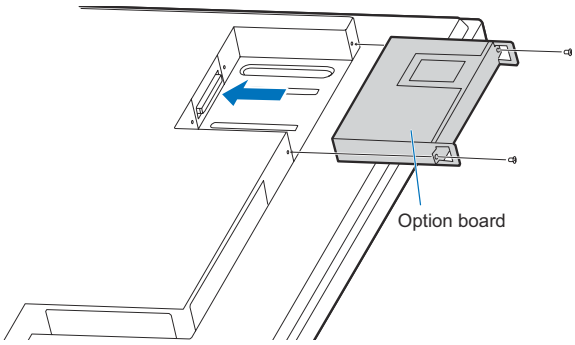

■Removing the option board

Assemble in the opposite order of the installation.

NOTE

- Make sure the option board is inserted into the slot in the correct orientation.
- Do not apply excessive force to manipulate the option board before attaching it with screws.
- Use the OPS fixing screws provided with the option board to securely fasten the option board in place. If used without securing it, it may fall and cause a serious accident.
- Keep the expansion slot cover and screws after you remove them.

■ Assembling the stand (PN-LM431) (not for Europe)

NOTE

- The stand is designed for landscape orientation. It cannot be used in portrait orientation.

1. **Spread a thick, soft cloth (blanket, etc.) that will prevent damage to the LCD panel on a stable flat surface where the entire monitor can be placed, and place the monitor with the LCD panel face down on the cloth.**

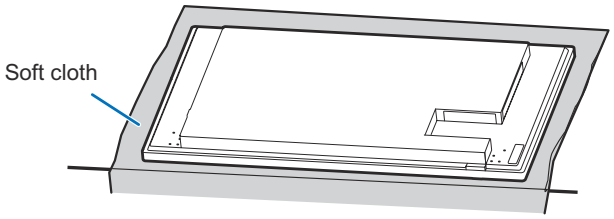

2. **Align the screw holes on this unit and the stand mounting bracket, and secure them with the stand mounting screws (M3 x 10) (supplied) (x10).**

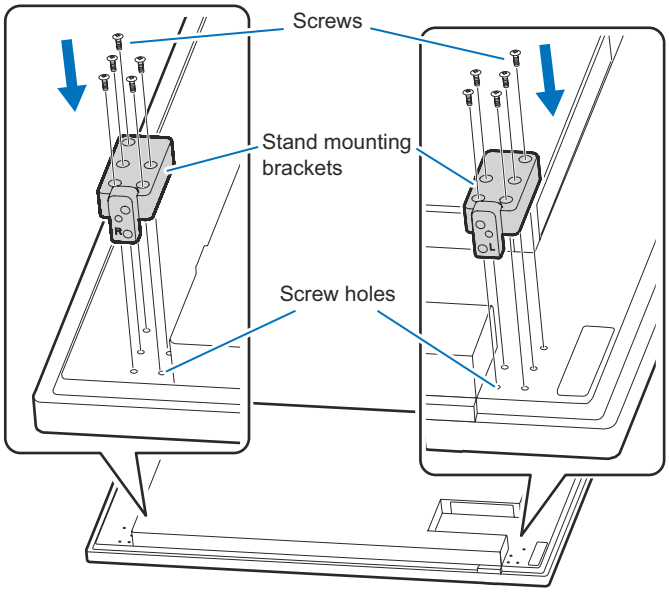

3. **Fix the stand legs with the stand mounting screws (M5 x 14) (supplied) (x4) on each side.**

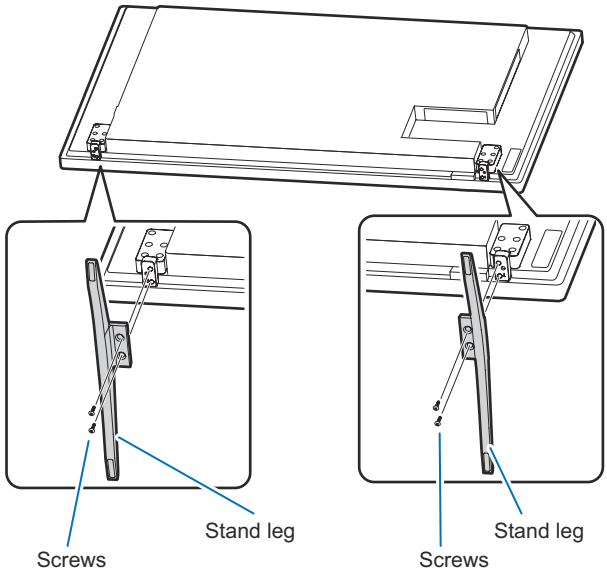

■ Dismantling the stand

1. **Spread a thick, soft cloth (blanket, etc.) that will prevent damage to the LCD panel on a stable flat surface where the entire monitor can be placed, and place the monitor with the LCD panel face down on the cloth.**
2. **Dismantle the stand in the reverse order of assembly.**

NOTE

- Make sure to securely fasten the stand mounting bracket and stand legs using the provided screws. Using it without fixing it may cause a serious accident.
- After the stand legs are attached to the unit, do not lift or move it by the stand legs alone.

SHARP

SHARP CORPORATION

PN-LM551-LM431 M EN25D(1)