purifier cool PC1

TP11 JN.000000 PN.000000-00-00
00.00.00 VERSION NO.01

User manual

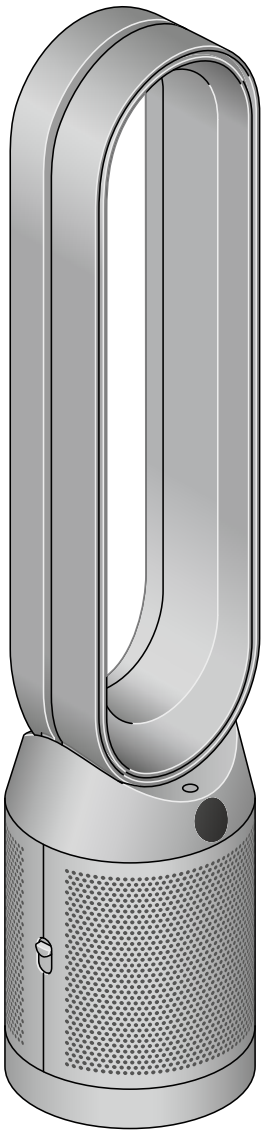

Contents

Assembling your machine
Getting started
Connecting to the MyDyson™ app
Connecting to your smart home
Power and continuous monitoring
Information menu
Auto mode
Airflow speed
Oscillation
Night mode and Sleep timer
Changing your HEPA+Carbon filter
Resetting your HEPA+Carbon filter life
Looking after your machine

dyson

Assembling your machine

Use both hands to lift your machine out of the box, by its base.

Do not lift out by the loop amplifier.

Dyson Purifier Cool PC1
Supplied with a combined glass HEPA+Carbon filter.

Getting started

Place the remote control on top of the machine with the buttons facing down.

Plug in and switch on.

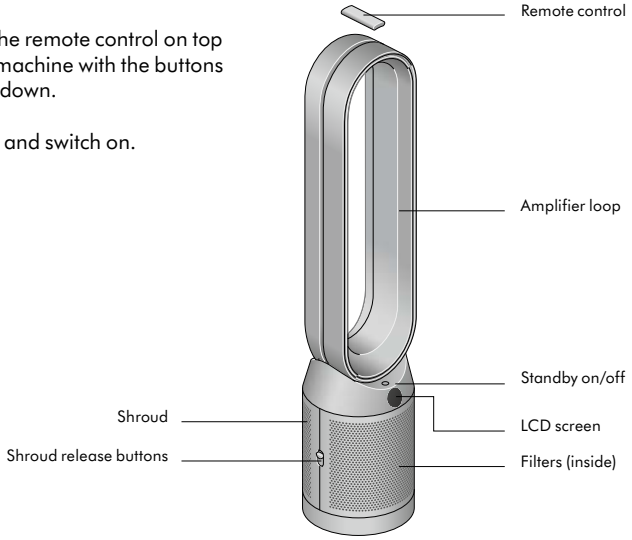

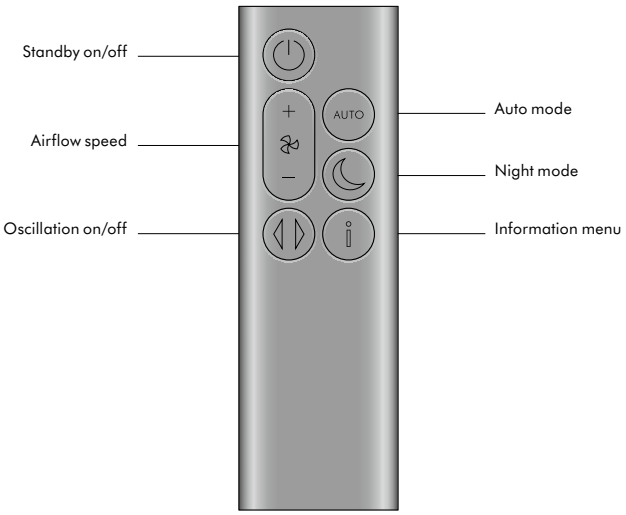

Connecting to the MyDyson™ app

Take full control with the MyDyson™ app and access step-by-step setup and support, control how and when your Dyson purifier operates, monitor air quality with visual updates and automatically keep up to date with the latest software updates.

Download the MyDyson™ app from the App Store or Google Play.

Open the app and follow the on-screen instructions to create a new account.

Apple and the Apple logo are trademarks of Apple Inc., registered in the U.S. and other countries.
App Store is a service mark of Apple Inc., registered in the U.S. and other countries.
Google Play and the Google Play logo are trademarks of Google Inc.

The Android robot is reproduced or modified from work created and shared by Google and used according to terms described in the Creative Commons 3.0 Attribution License.

Connecting to your smart home

Using Amazon Alexa
Ask Alexa to enable the Dyson skill, to control your Dyson purifier or purifier humidifier. And set a routine that automates how your machine works with other devices in your home.

Using Google Assistant
Control all of your connected purifiers with Google or set a routine to automate how your machine works with other devices in your home. Just say "Hey Google" to get started.

Using Siri
Connect your Dyson machines to Siri Shortcuts and you'll be able to control them with your voice, on your Apple device.

Power and continuous monitoring

Standby on/off
Press the Standby on/off button on your Dyson purifier or remote control to stop your machine. It will continue to monitor the air quality.

Continuous monitoring
Continuous monitoring is turned off by default. Once turned on, it will always be active until you turn it off again.

With continuous monitoring turned on, your Dyson purifier will gather air quality and temperature information, which is displayed on the LCD screen and in the MyDyson™ app.

Press and hold the Auto mode button on the remote control for five seconds to turn it on. The LCD screen will indicate when continuous monitoring is on or off.

Wi-Fi Connectivity
Wi-Fi is on by default. To turn the Wi-Fi on or off, press and hold the Standby on/off button on your machine for five seconds.

Information menu

Press this button to scroll through the information being monitored by your Dyson purifying fan.

Information about particulate matter and filter levels is shown on the LCD screen.

When a particular type of pollutant causes air quality to decrease, a symbol for the pollutant will show on the LCD screen.

Indoor air quality – 12 seconds
Monitor the current air quality with a graph showing the last 12 seconds of data.

Particulate matter (PM10)
Larger microscopic particles up to 10 microns in size, suspended in the air we breathe. These include dust, mould and pollen.

Particulate matter (PM2.5)
Microscopic particles up to 2.5 microns in size, suspended in the air we breathe. These include smoke, bacteria and allergens.

Filters
The remaining filter life is shown on the LCD screen and will indicate when your filters need replacing.

Wi-Fi
The current status of connection to the Wi-Fi network.

Auto mode

Set your Dyson purifying fan to Auto mode and the on-board sensors will intelligently adjust the settings of the machine according to the air quality.

Air quality: your machine will pause when the target air quality has been reached, switching on again when the air quality levels drop.

Airflow speed: the airflow speed will increase until the target air quality has been reached.

Airflow speed

Press the Airflow speed button to increase and decrease the airflow speed.

Oscillation

Press the Oscillation button to circulate the air around the room and scroll through the oscillation settings from 0° to 350°.

Customise your oscillation setting in the MyDyson™ app.

Night mode and Sleep timer

In Night mode, your Dyson purifying fan will continue to monitor and respond to changes, but only using its quietest settings – and with its LCD screen dimmed.

Press the Night mode and Sleep timer button to scroll through the timer options.

Changing your HEPA+Carbon filter

Before changing your filter, switch off and unplug your Dyson purifying fan.

The remaining filter life is displayed on the screen and will indicate when your non-washable filters need replacing. Press the Information button on your remote.

You'll need to reset the filter life on your machine.

Dyson Purifier Cool PC1
Supplied with a HEPA+Carbon filter.

To change your HEPA+Carbon filter, push down on the buttons either side of your machine to release the outer cover. Push down on the tabs to remove the filter.

Push the replacement filter into the outer cover and make sure the tabs click into place.

Put the outer covers into position on your machine and push firmly until they both click securely into position.

Plug in and switch your machine, and reset your filter life.

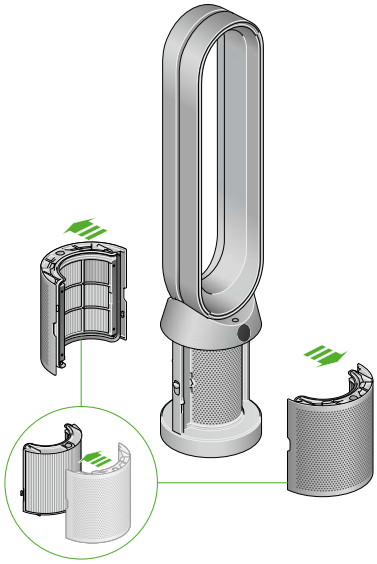

Resetting your HEPA+Carbon filter life

It's important to reset your filter life after you have replaced your filter.

Resetting your HEPA+Carbon filter life
Press and hold the Night mode button on your remote control.

The display on your machine will countdown from five, the filter life will be reset and your machine is ready to use.

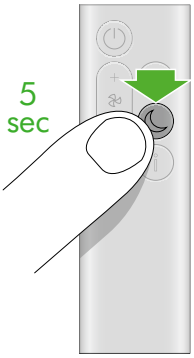

Looking after your machine

To always get the best performance from your Dyson purifier, it's important to regularly clean it and check for blockages.

Cleaning your machine

If your machine is dusty, wipe with a damp lint-free cloth.

Look for blockages in the air inlet holes on the filter and the small aperture inside the loop amplifier.

Use a soft brush to remove dust and debris.

Don't use detergents or polishes to clean your machine.

Error codes

If your machine shows an error code, try turning it off and then on again. If this doesn't clear the error code contact Dyson Customer Care.

For more information and support for your machine go to the MyDyson™ app or online: Dyson.co.uk