dyson purifier cool

User manual

SV12 JN.000000 PN.000000-00-00
00.00.00 VERSION NO.01

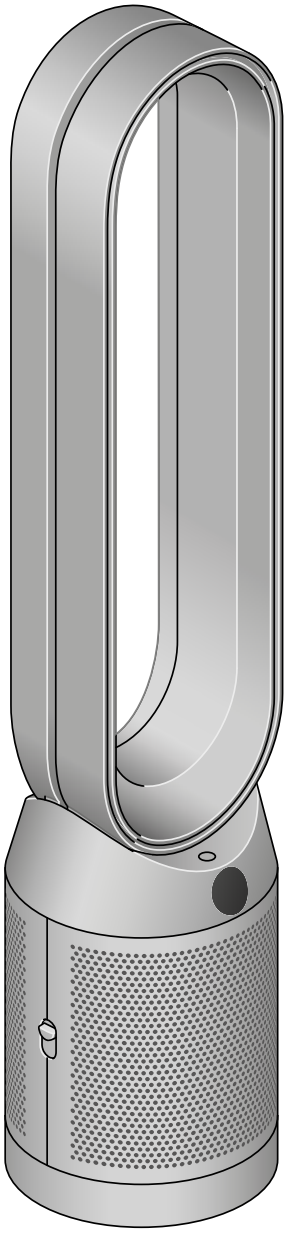

Contents

Assembling your machine
Getting started
Connecting to the Dyson Link app
Connecting to your smart home
Power and continuous monitoring
Information menu
Auto mode
Airflow speed and direction
Oscillation
Night mode and Sleep timer
Changing your HEPA+Carbon filter
Resetting your HEPA+Carbon filter life
Changing your HEPA and carbon filters
Resetting your HEPA and carbon filter life
Changing your HEPA+Carbon filters
with a catalytic filter
Resetting your HEPA+Carbon filter life
Looking after your machine

Assembling your machine

Use both hands to lift your machine out of the box, by its base.

Do not lift out by the loop amplifier.

Assemble your machine with the filters that are supplied.

Dyson Purifier Cool
Supplied with a HEPA+Carbon filter.

Push your HEPA+Carbon filter into the outer cover and position onto the base. Push firmly until both outer covers click securely into place.

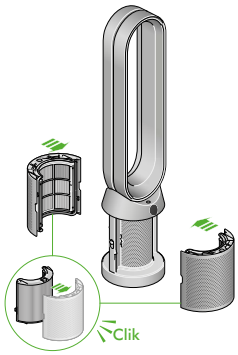

Dyson Purifier Cool
Supplied with separate HEPA and carbon filters.

Push the carbon filters into place on the machine.

Push the HEPA filter into the outer cover. Put the outer covers into position on the base and push firmly until they both click securely into place.

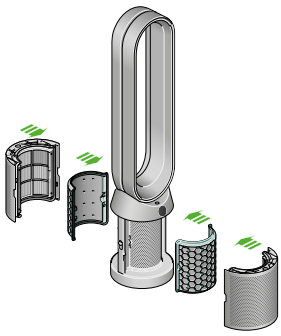

Dyson Purifier Cool Formaldehyde
Your machine comes with a permanent catalytic filter and a HEPA+Carbon filter.

Push the catalytic filter into position on the machine.

Push the HEPA+Carbon filter into the outer cover and position on the base. Push firmly until both outer covers click into place.

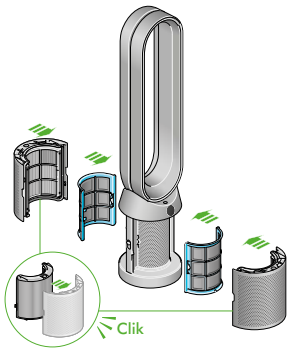

Getting started

Place the remote control on top of the machine with the buttons facing down.

Plug in and switch on.

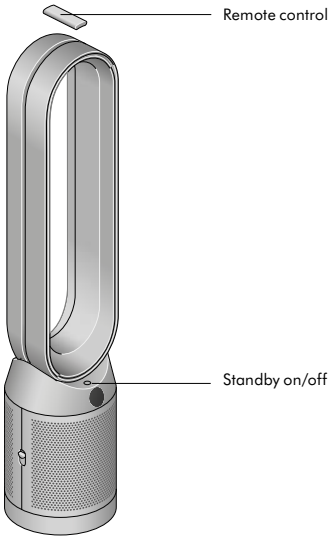

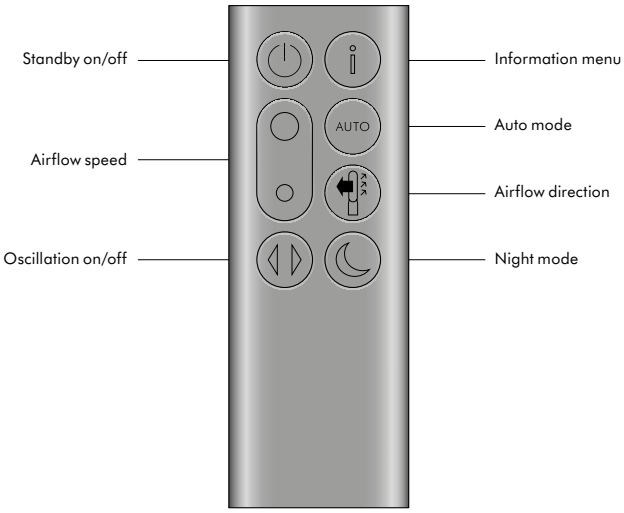

Connecting to the Dyson Link app

Take full control with the Dyson Link app and access step-by-step setup and support, control how and when your Dyson purifying fan operates, monitor air quality with visual updates and automatically keep up to date with the latest software updates.

Download the Dyson Link app from the App Store or Google Play.

Open the app and follow the on-screen instructions to create a new account.

Apple and the Apple logo are trademarks of Apple Inc., registered in the U.S. and other countries.
App Store is a service mark of Apple Inc., registered in the U.S. and other countries.
Google Play and the Google Play logo are trademarks of Google Inc.

The Android robot is reproduced or modified from work created and shared by Google and used according to terms described in the Creative Commons 3.0 Attribution License.

Connecting to your smart home

Using Amazon Alexa
Ask Alexa to enable the Dyson skill, to control your Dyson purifier or purifier humidifier. And set a routine that automates how your machine works with other devices in your home.

Using Google Assistant
Control all of your connected purifiers with Google or set a routine to automate how your machine works with other devices in your home. Just say "Hey Google" to get started.

Using Siri
Connect your Dyson machines to Siri Shortcuts and you'll be able to control them with your voice, on your Apple device.

Power and continuous monitoring

Standby on/off
Press the Standby on/off button on your Dyson purifying fan or remote control to stop your machine. It will continue to monitor the air quality.

Continuous monitoring
Continuous monitoring is turned off by default. Once turned on, it will always be active until you turn it off again.

With continuous monitoring turned on, your Dyson purifying fan will gather air quality, temperature and humidity information, which is displayed on the LCD screen and in the Dyson Link app.

Continuous monitoring
Press and hold the Auto mode button on the remote control for 5 seconds to turn it on. The LCD screen will indicate when continuous monitoring is on or off.

Wi-Fi Connectivity
Wi-Fi is on by default. To turn the Wi-Fi on or off, press and hold the Standby on/off button on your machine for 5 seconds.

Information menu

Press this button to scroll through the information being monitored by your Dyson purifying fan.

Information about air quality, temperature, humidity and filter levels is shown on the LCD screen.

When a particular type of pollutant causes air quality to decrease, a symbol for the pollutant will show on the LCD screen.

Indoor air quality - 12 seconds
Monitor the current air quality with a graph showing the last 12 seconds of data.

Particulate matter (PM10)
Larger microscopic particles up to 10 microns in size, suspended in the air we breathe. These include dust, mould and pollen.

Nitrogen dioxide and other oxidising gases
These potentially harmful gases are released into the air by combustion, for example, the burning gas when cooking and in vehicle exhaust emissions.

Indoor humidity
The amount of water vapour in the air, shown as a percentage.

Formaldehyde (HCHO)
A common indoor pollutant. It can be released for many years from furnishings, floorings and glue.

Particulate matter (PM2.5)
Microscopic particles up to 2.5 microns in size, suspended in the air we breathe. These include smoke, bacteria and allergens.

Volatile organic compounds
VOCs are typically odours that may be potentially harmful. These can be found in cleaning products, paints and furnishings.

Indoor temperature
Monitor the ambient temperature to help maintain a comfortable environment.

Filters
The remaining filter life is shown on the LCD screen and will indicate when your filters need replacing

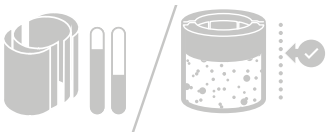

Wi-Fi
The current status of connection to the Wi-Fi network.

Auto mode

Set your Dyson purifying fan to Auto mode and the on-board sensors will intelligently adjust the settings of the machine according to the air quality.

Air quality: your machine will pause when the target air quality has been reached, switching on again when the air quality levels drop.

Airflow speed: the airflow speed will increase until the target air quality and temperature have been reached.

Airflow speed and direction

Press the Airflow speed button to increase and decrease the airflow speed.

Press the Airflow direction button to change the direction of airflow from front to back.

Change the airflow direction for your personal comfort.

Select the Airflow direction to Fan mode for airflow from the front for purifying and cooling.

Oscillation

Press the Oscillation button to circulate the air around the room and scroll through the oscillation settings from 0° to 350°.

Customise your oscillation setting in the Dyson Link app.

Night mode and Sleep timer

In Night mode, your Dyson purifying fan will continue to monitor and respond to changes in air quality, but only using its quietest settings – and with its LCD screen dimmed.

Press the Night mode and Sleep timer button to scroll through the timer options.

Changing your HEPA+Carbon filter

Before changing your filter, switch off and unplug your Dyson purifying fan.

The remaining filter life is displayed on the screen and will indicate when your non-washable filters need replacing. Press the Information button on your remote or check on the Dyson Link app.

You'll need to reset the filter life on your machine.

Dyson Purifier Cool
Supplied with a HEPA+Carbon filter.

To change your HEPA+Carbon filter, push down on the buttons either side of your machine to release the outer cover. Push down on the tabs to remove the filter.

Push the replacement filter into the outer cover and make sure the tabs click into place.

Put the outer covers into position on your machine and push firmly until they both click securely into position.

Plug in and switch your machine, and reset your filter life.

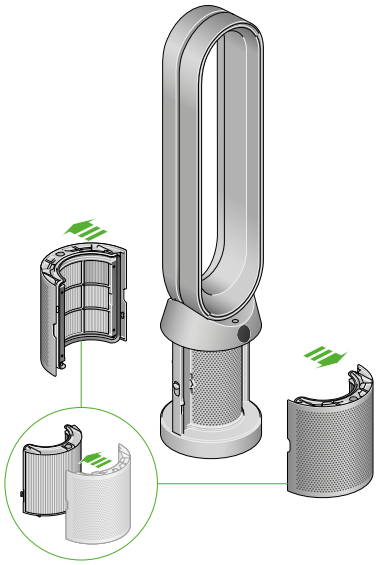

Resetting your HEPA+Carbon filter life

It's important to reset your filter life after you have replaced your filter.

Resetting your HEPA+Carbon filter life
Press and hold the Night mode button on your remote control.

The display on your machine will countdown from five, the filter life will be reset and your machine is ready to use.

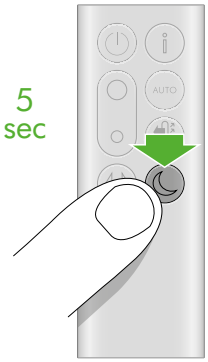

Changing your HEPA and carbon filters

Before changing your filter, switch off and unplug your Dyson purifying fan.

The remaining filter life is displayed on the screen and will indicate when your non-washable filters need replacing. Press the Information button on your remote or check on the Dyson Link app.

You'll need to reset the filter life on your machine.

Dyson Purifier Cool
Supplied with separate HEPA and carbon filters.

To change your HEPA filter, push down on the buttons either side of your machine to release the filter covers. Push down on the tabs to remove the HEPA filter.

Push the replacement filter into the outer cover and make sure the tabs click into place.

To change the carbon filter from your machine, remove the filter from the base of your machine and insert the replacement filter.

Put the outer covers into position on your machine and push firmly until they both click securely into position.

Plug in and switch your machine, and reset your filter life.

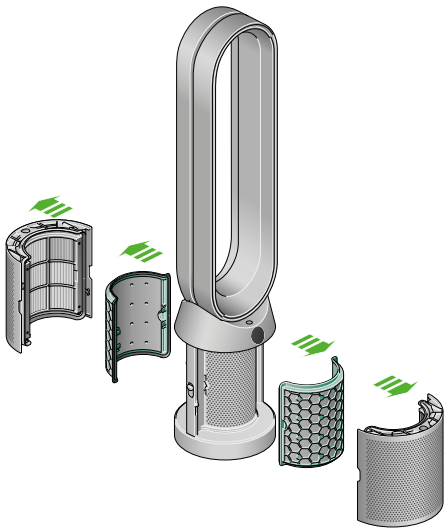

Resetting your HEPA and carbon filter life

It's important to reset your filter life after you have replaced your filter.

Resetting your HEPA filter life
Press and hold the Night mode button on your remote control.

The display on your machine will countdown from five, the filter life will be reset and your machine is ready to use.

Resetting your carbon filter life
Press and hold the Oscillation button on your remote control.

The display on your machine will countdown from five, the filter life will be reset and your machine is ready to use.

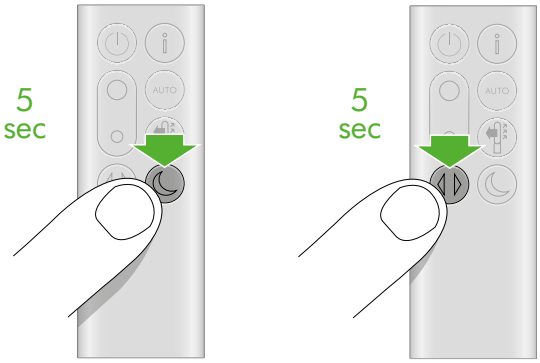

Changing your HEPA+Carbon filters with a catalytic filter

Before changing your filter, switch off and unplug your Dyson purifying fan.

The remaining filter life is displayed on the screen and will indicate when your non-washable filters need replacing. Press the Information button on your remote or check on the Dyson Link app.

You'll need to reset the filter life on your machine.

Dyson Purifier Cool Formaldehyde
Your machine comes with a permanent catalytic filter and a HEPA+Carbon filter.

You won't need to change your catalytic filter.

To change your HEPA+Carbon filter, push down on the buttons either side of your machine to release the outer cover. Push down on the tabs to remove the filter.

Push the replacement filter into the outer cover and make sure the tabs click into place.

Put the outer covers into position on your machine and push firmly until they both click securely into position.

Plug in and switch your machine, and reset your filter life.

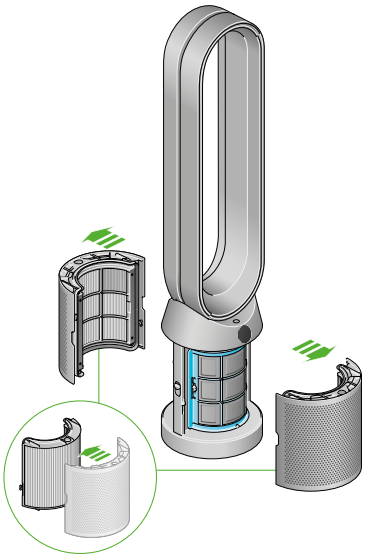

Resetting your HEPA+Carbon filter life

It's important to reset your filter life after you have replaced your filter.

Resetting your HEPA+Carbon filter life
Press and hold the Night mode button on your remote control.

The display on your machine will countdown from five, the filter life will be reset and your machine is ready to use.

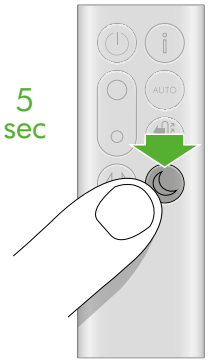

Looking after your machine

To always get the best performance from your Dyson purifying fan, it's important to regularly clean it and check for blockages.

Cleaning your machine

If your machine is dusty, wipe with a damp lint-free cloth.

Look for blockages in the air inlet holes on the filter and the small aperture inside the loop amplifier.

Use a soft brush to remove dust and debris.

Don't use detergents or polishes to clean your machine.

Error codes

If your machine shows an error code, try turning it off and then on again. If this doesn't clear the e-rror code contact Dyson Customer Care.

For more information and support for your machine go to the Dyson Link app or online: www.dyson.com/support