EPSON

ET-3900 Series L6360 Series
ET-3950 Series L6370 Series

User's Guide

Printing

Copying

Scanning

Maintaining the Printer

Solving Problems

NPD7494-03 EN

Contents

Guide to This Manual

Introduction to the Manuals. 6
Important Safety Instructions (paper manual). . . . 6
Start Here (paper manual). 6
User's Guide (digital manual). 6
Information on the Latest Manuals. 6
Searching for Information. 6
Printing Only the Pages You Need. 7
About This Manual. 7
Marks and Symbols. 7
Notes on Screenshots and Illustrations. 8
Operating System References. 8
Trademarks. 9
Copyright. 9

Important Instructions

Safety Instructions. 12
Safety Instructions for Ink. 12
Printer Advisories and Warnings. 13
Advisories and Warnings for Setting Up the Printer. 13
Advisories and Warnings for Using the Printer. . 13
Advisories and Warnings for Using the LCD Screen. 14
Advisories and Warnings for Connecting to the Internet. 14
Advisories and Warnings for Using the Printer with a Wireless Connection. 14
Advisories and Warnings for Transporting or Storing the Printer. 14
Notes on the Administrator Password. 14
Protecting Your Personal Information. 16

Part Names and Functions

Front. 18
Inside. 19
Rear. 20

Guide to the Control Panel

Control Panel. 22
Home Screen Configuration. 23
Guide to the Network Icons. 24

Loading Paper

Paper Handling Precautions. 26
Paper Size and Type Settings. 27
List of Paper Type. 27
Loading Paper. 28
Precautions when Loading Letterhead Paper. . . . 28

Placing Originals

Placing Originals. 30
Originals that are not Supported by the ADF. 31

Printing

Printing Documents. 33
Printing from a Computer. 33
Printing Documents from Mobile Devices. 48
Printing on Envelopes. 50
Printing on Envelopes from a Computer (Windows). 50
Printing on Envelopes from a Computer (Mac OS). 50
Printing Web Pages. 51
Printing Web Pages from a Computer. 51
Printing Web Pages from Mobile Devices. 51
Printing Using a Cloud Service. 51

Copying

Available Copying Methods. 54
Copying Originals. 54
Copying on 2-Sides. 55
Copying by Enlarging or Reducing. 56
Copying Multiple Originals onto One Sheet. . . . 56
Copying Originals Using Good Quality. 57
Copying ID card. 58
Copying Without Margins. 59
Basic Menu Options for Copying. 59
B&W:. 59
Color:. 59
(2-Sided):. 59
(Density):. 60
Advanced Menu Options for Copying. 60
Paper Setting:. 60
Reduce/Enlarge:. 60
Original Size:. 61

Multi-Page:. 61
Quality:. 61
Finishing:. 61
Original Orientation:. 61
Remove Shadow:. 61
Remove Punch Holes:. 61
ID Card Copy:. 62
Borderless Copy:. 62
Clear All Settings:. 62

Scanning

Basic Information on Scanning. 64
What is a "Scan"?. 64
Scanning Uses. 64
Available Scanning Methods. 64
Recommended File Formats. 67
Recommended Resolutions. 67
Scanning Originals to a Computer. 68
Scanning from the Control Panel. 68
Scanning from a Computer. 70
Scanning Originals to the Cloud. 70
Cloud Storage Scan Setting Items. 72
Advanced Menu Options for Scanning to the Cloud. 72
Scanning Originals Using WSD. 73
Scanning Originals to a Mobile Device. 74
Advanced Scanning. 74
Scanning Multiple Photos at the Same Time. . . . 74

Maintaining the Printer

Checking the Ink Level. 77
Cleaning the Paper Path for Paper Feeding Problems. 77
Improving Print, Copy, and Scan Quality. 79
Adjusting the Print Quality. 79
Checking and Cleaning the Print Head. 80
Running Power Cleaning. 82
Running Power Ink Flushing. 83
Preventing nozzle clogging. 84
Aligning the Print Head. 84
Cleaning the Paper Path for Ink Smears. 84
Cleaning the Scanner Glass. 85
Cleaning the ADF. 86
Cleaning the Translucent Film. 91
Cleaning the Printer. 94
Cleaning Spilled ink. 94

In These Situations

When Replacing a Computer. 96
Saving Power. 96
Disabling your Wi-Fi Connection. 96
Checking the Total Number of Pages Fed Through the Printer. 97
Installing the Applications Separately. 98
Checking if a genuine Epson printer driver is installed - Windows. 99
Checking if a genuine Epson printer driver is installed - Mac OS. 100
Re-Setting the Network Connection. 100
Making Settings for Connecting to the Computer. 100
Making Settings for Connecting to the mobile device. 101
Configuring Wi-Fi Settings from the Control Panel. 101
Checking the Printer's Network Connection Status (Network Connection Report). 105
Messages and Solutions on the Network Connection Report. 106
Connecting a Device and Printer Directly (Wi-Fi Direct). 111
About Wi-Fi Direct. 112
Connecting to Devices using Wi-Fi Direct. 112
Disconnecting Wi-Fi Direct (Simple AP) Connection. 114
Changing the Wi-Fi Direct (Simple AP) Settings Such as the SSID. 114
Adding or Changing the Printer's Connection. . . . 115
To Set Up a Printer on Multiple Computers. . . . 115
Changing the Connection from Wi-Fi to USB. . 116
Changing the Connection from Wi-Fi to Wired LAN. 117
Setting a Static IP Address for the Printer. 117
Transporting and Storing the Printer. 118

Solving Problems

Cannot Print or Scan. 124
Problem Solving. 124
The Application or Printer Driver do not Work Properly. 125
The Printer Cannot Connect by USB. 128
The Printer Cannot Connect to the Network. . . 129
Paper Does Not Feed Properly. 133
Printing, Copying, and Scanning Quality is Poor. . 136
Print Quality is Poor. 136
Copy Quality is Poor. 146

Scanned Image Problems. 153
Cannot Select Paper Type or Paper Source in Printer Driver. 155
A genuine Epson printer driver has not been installed.. 155
A Message is Displayed on the LCD Screen. 155
Paper Gets Jammed. 156
Removing Jammed Paper. 157
Removing Jammed Paper from the ADF. 160
Preventing Paper Jams. 164
It is Time to Refill the Ink. 164
Ink Bottle Handling Precautions. 164
Refilling the Ink Tank. 165
It is Time to Replace the Maintenance Box. 170
Maintenance Box Handling Precautions. 170
Replacing a Maintenance Box. 171
Cannot Operate the Printer as Expected. 172
The Printer Does Not Turn On or Off. 172
Operations are Slow. 173
LCD Screen Gets Dark. 175
The Printer Is Loud. 175
The Root Certificate Needs to be Updated. 175
Cannot Perform Manual 2-sided Printing (Windows). 175
The Print Settings Menu is Not Displayed (Mac OS). 176
A Message Prompting You to Reset the Ink Level is Displayed Even After Refilling the Ink. . 176
The Ink Level Display does not Change Even After Refilling the Ink. 176
Cannot Solve Problem. 176
Cannot Solve Printing or Copying Problems. . . 176

Product Information

Paper Information. 179
Available Paper and Capacities. 179
Unavailable Paper Types. 182
Consumable Products Information. 182
Ink Bottle Codes. 182
Maintenance Box Code. 183
Software Information. 184
Application for Printing from a Computer (Windows Printer Driver). 184
Application for Printing from a Computer (Mac OS Printer Driver). 185
Application for Controlling the Scanner (Epson Scan 2). 185
Application for Configuring Printer Operations (Web Config). 186
Application for Updating Software and Firmware (Epson Software Updater). 187
Settings Menu List. 187
General Settings. 187
Maintenance. 193
Print Status Sheet. 194
Print Counter. 195
User Settings. 195
Customer Research. 195
Restore Default Settings. 195
Firmware Update. 196
Product Specifications. 196
Printer Specifications. 196
Scanner Specifications. 197
ADF Specifications. 198
Using Port for the Printer. 198
Interface Specifications. 199
Network Specifications. 199
Supported Third Party Services. 203
Dimensions. 203
Electrical Specifications. 204
Environmental Specifications. 205
System Requirements. 205
Regulatory Information. 206
Standards and Approvals. 206
Restrictions on Copying. 207
Nameplate. 208

Where to Get Help

Technical Support Web Site. 210
Contacting Epson Support. 210
Before Contacting Epson. 210
Help for Users in Europe. 210
Help for Users in Taiwan. 210
Help for Users in Australia. 211
Help for Users in New Zealand. 211
Help for Users in Singapore. 212
Help for Users in Thailand. 212
Help for Users in Vietnam. 213
Help for Users in Indonesia. 213
Help for Users in Hong Kong. 213
Help for Users in Malaysia. 214
Help for Users in India. 214
Help for Users in the Philippines. 215

Guide to This Manual

Introduction to the Manuals. 6

Searching for Information. 6

Printing Only the Pages You Need. 7

About This Manual. 7

Trademarks. 9

Copyright. 9

Introduction to the Manuals

The following manuals are supplied with your Epson printer. As well as the manuals, check the various types of help information available from the printer itself or from the Epson software applications.

Important Safety Instructions (paper manual)

Provides you with instructions to ensure the safe use of this printer.

Start Here (paper manual)

Provides you with information on setting up the printer and installing the software.

User's Guide (digital manual)

This manual. Available as a PDF and Web manual. Provides detailed information and instructions on using the printer and solving problems.

This manual is used for the ET-3950 Series/L6370 Series and ET-3900 Series/L6360 Series. However, the ADF (Automatic Document Feeder) is only available on the ET-3950 Series/L6370 Series.

Information on the Latest Manuals

- ❏ Paper manual

  Visit the Epson Europe support website at http://www.epson.eu/support, or the Epson worldwide support website at http://support.epson.net/.

- ❏ Digital manual

  Visit the following website, enter the product name, and then go to **Support**.

  https://epson.sn

Searching for Information

The PDF manual allows you to search for information you are looking for by keyword, or jump directly to specific sections using the bookmarks. This section explains how to use a PDF manual that has been opened in Adobe Acrobat Reader DC on your computer.

Searching by keyword

Click **Edit** > **Advanced Search**. Enter the keyword (text) for information you want to find in the search window, and then click **Search**. Hits are displayed as a list. Click one of the displayed hits to jump to that page.

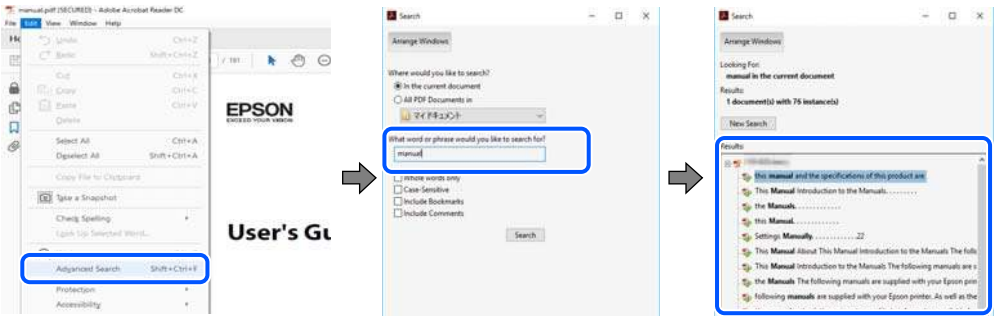

Jumping directly from bookmarks

Click a title to jump to that page. Click + or > to view the lower level titles in that section. To return to the previous page, perform the following operation on your keyboard.

❏ Windows: Hold down **Alt**. and then press ←.

❏ Mac OS: Hold down the command key, and then press ←.

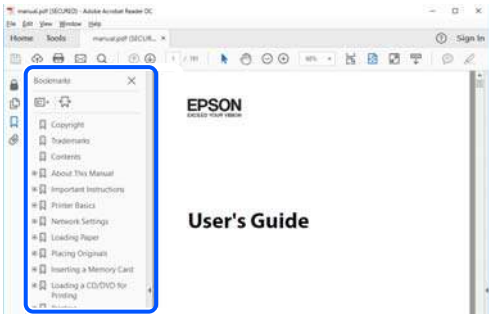

Printing Only the Pages You Need

You can extract and print only the pages you need. Click **Print** in the **File** menu, and then specify the pages you want to print in **Pages** in **Pages to Print**.

❏ To specify a series of pages, enter a hyphen between the start page and the end page.

Example: 20-25

❏ To specify pages that are not in series, divide the pages with commas.

Example: 5, 10, 15

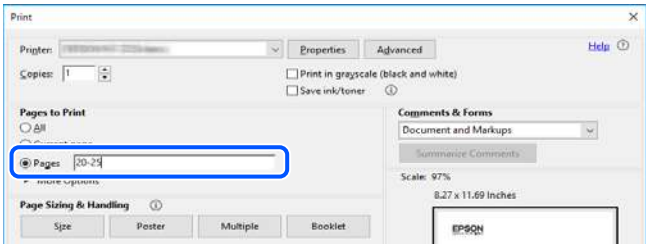

About This Manual

This section explains the meaning of marks and symbols, notes on descriptions, and operating system reference information used in this manual.

Marks and Symbols

⚠ ***Caution:***

Instructions that must be followed carefully to avoid bodily injury.

Important:
Instructions that must be observed to avoid damage to your equipment.

Note:
Provides complementary and reference information.

Related Information

➡ Links to related sections.

Provides Web Video Manuals of the operating instructions. See the related information link.

Notes on Screenshots and Illustrations

- ❏ Screenshots of the printer driver are from Windows 10 or macOS High Sierra (10.13). The content displayed on the screens varies depending on the model and situation.
- ❏ Illustrations used in this manual are examples only. Although there may be slight differences depending on the model, the method of operation is the same.
- ❏ Some of the menu items on the LCD screen vary depending on the model and settings.
- ❏ You can read the QR code using a dedicated app.

Operating System References

Windows

In this manual, terms such as "Windows 11", "Windows 10", "Windows 8.1", "Windows 8", "Windows 7", "Windows Server 2022", "Windows Server 2019", "Windows Server 2016", "Windows Server 2012 R2", "Windows Server 2012", "Windows Server 2008 R2", and "Windows Server 2008" refer to the following operating systems. Additionally, "Windows" is used to refer to all versions.

- ❏ Microsoft® Windows® 11 operating system
- ❏ Microsoft® Windows® 10 operating system
- ❏ Microsoft® Windows® 8.1 operating system
- ❏ Microsoft® Windows® 8 operating system
- ❏ Microsoft® Windows® 7 operating system
- ❏ Microsoft® Windows Server® 2022 operating system
- ❏ Microsoft® Windows Server® 2019 operating system
- ❏ Microsoft® Windows Server® 2016 operating system
- ❏ Microsoft® Windows Server® 2012 R2 operating system
- ❏ Microsoft® Windows Server® 2012 operating system
- ❏ Microsoft® Windows Server® 2008 R2 operating system
- ❏ Microsoft® Windows Server® 2008 operating system

Mac OS

In this manual, "Mac OS" is used to refer to Mac OS X 10.9.5 or later as well as macOS 11 or later.

Trademarks

- ❏ Microsoft, Microsoft Edge, Windows and Windows Server are trademarks of the Microsoft group of companies.
- ❏ Apple, Mac, macOS, OS X, Bonjour, Safari, AirPrint, iPad, iPhone, iPod touch, and App Store are trademarks of Apple Inc., registered in the U.S. and other countries.
- ❏ Use of the Works with Apple badge means that an accessory has been designed to work specifically with the technology identified in the badge and has been certified by the developer to meet Apple performance standards.
- ❏ IOS is a trademark or registered trademark of Cisco in the U.S. and other countries and is used under license.
- ❏ Android, Chrome, ChromeOS and Google Play are trademarks of Google LLC.
- ❏ Adobe, Acrobat, and Reader are either registered trademarks or trademarks of Adobe in the United States and/or other countries.
- ❏ QR Code is a registered trademark of DENSO WAVE INCORPORATED in Japan and other countries.
- ❏ Firefox is a trademark of the Mozilla Foundation in the U.S. and other countries.
- ❏ The Mopria™ word mark and the Mopria™ Logo are registered and/or unregistered trademarks of Mopria Alliance, Inc. in the United States and other countries. Unauthorized use is strictly prohibited.
- ❏ Wi-Fi® and Wi-Fi Direct® are registered trademarks of Wi-Fi Alliance®. Wi-Fi Protected Setup™, WPA™, WPA2™, WPA3™ are trademarks of Wi-Fi Alliance®.
- ❏ The Bluetooth® word mark and logos are registered trademarks owned by Bluetooth SIG, Inc. and any use of such marks by Seiko Epson Corporation is under license.
- ❏ General Notice: All other trademarks are the property of their respective owners and used for identification purposes only.

Copyright

No part of this publication may be reproduced, stored in a retrieval system, or transmitted in any form or by any means, electronic, mechanical, photocopying, recording, or otherwise, without the prior written permission of Seiko Epson Corporation. No patent liability is assumed with respect to the use of the information contained herein. Neither is any liability assumed for damages resulting from the use of the information herein. The information contained herein is designed only for use with this Epson product. Epson is not responsible for any use of this information as applied to other products.

Neither Seiko Epson Corporation nor its affiliates shall be liable to the purchaser of this product or third parties for damages, losses, costs, or expenses incurred by the purchaser or third parties as a result of accident, misuse, or abuse of this product or unauthorized modifications, repairs, or alterations to this product, or (excluding the U.S.) failure to strictly comply with Seiko Epson Corporation's operating and maintenance instructions.

Seiko Epson Corporation and its affiliates shall not be liable for any damages or problems arising from the use of any options or any consumable products other than those designated as Original Epson Products or Epson Approved Products by Seiko Epson Corporation.

Seiko Epson Corporation shall not be held liable for any damage resulting from electromagnetic interference that occurs from the use of any interface cables other than those designated as Epson Approved Products by Seiko Epson Corporation.

© 2024-2025 Seiko Epson Corporation

The contents of this manual and the specifications of this product are subject to change without notice.

Important Instructions

Safety Instructions. 12

Printer Advisories and Warnings. 13

Protecting Your Personal Information. 16

Safety Instructions

Read and follow these instructions to ensure safe use of this printer. Make sure you keep this manual for future reference. Also, be sure to follow all warnings and instructions marked on the printer.

- ❏ Some of the symbols used on your printer are to ensure safety and proper use of the printer. Visit the following Web site to learn the meaning of the symbols.

  http://support.epson.net/symbols/

- ❏ Use only the power cord supplied with the printer and do not use the cord with any other equipment. Use of other cords with this printer or the use of the supplied power cord with other equipment may result in fire or electric shock.
- ❏ Be sure your AC power cord meets the relevant local safety standard.
- ❏ Never disassemble, modify, or attempt to repair the power cord, plug, printer unit, scanner unit, or options by yourself, except as specifically explained in the printer's manuals.
- ❏ Unplug the printer and refer servicing to qualified service personnel under the following conditions:

  The power cord or plug is damaged; liquid has entered the printer; the printer has been dropped or the casing damaged; the printer does not operate normally or exhibits a distinct change in performance. Do not adjust controls that are not covered by the operating instructions.

- ❏ Place the printer near a wall outlet where the plug can be easily unplugged.
- ❏ Do not place or store the printer outdoors, near excessive dirt or dust, water, heat sources, or in locations subject to shocks, vibrations, high temperature or humidity.
- ❏ Take care not to spill liquid on the printer and not to handle the printer with wet hands.
- ❏ Keep the printer at least 22 cm away from cardiac pacemakers. Radio waves from this printer may adversely affect the operation of cardiac pacemakers.
- ❏ If the LCD screen is damaged, contact your dealer. If the liquid crystal solution gets on your hands, wash them thoroughly with soap and water. If the liquid crystal solution gets into your eyes, flush them immediately with water. If discomfort or vision problems remain after a thorough flushing, see a doctor immediately.

Safety Instructions for Ink

- ❏ Be careful not to touch any ink when you handle the ink tanks, ink tank caps, and opened ink bottles or ink bottle caps.
  - ❏ If ink gets on your skin, wash the area thoroughly with soap and water.
  - ❏ If ink gets into your eyes, flush them immediately with water. If discomfort or vision problems continue after a thorough flushing, see a doctor immediately.
  - ❏ If ink gets into your mouth, see a doctor right away.
- ❏ Do not disassemble the maintenance box; otherwise ink may get into your eyes or on your skin.
- ❏ Do not shake an ink bottle too vigorously or subject it to strong impacts as this can cause ink to leak.
- ❏ Keep ink bottles and maintenance box out of the reach of children. Do not allow children to drink from the ink bottles.

Printer Advisories and Warnings

Read and follow these instructions to avoid damaging the printer or your property. Make sure you keep this manual for future reference.

Advisories and Warnings for Setting Up the Printer

- ❏ Do not block or cover the vents and openings in the printer.
- ❏ Use only the type of power source indicated on the printer's label.
- ❏ Avoid using outlets on the same circuit as photocopiers or air control systems that regularly switch on and off.
- ❏ Avoid electrical outlets controlled by wall switches or automatic timers.
- ❏ Keep the entire computer system away from potential sources of electromagnetic interference, such as loudspeakers or the base units of cordless telephones.
- ❏ The power-supply cords should be placed to avoid abrasions, cuts, fraying, crimping, and kinking. Do not place objects on top of the power-supply cords and do not allow the power-supply cords to be stepped on or run over. Be particularly careful to keep all the power-supply cords straight at the ends.
- ❏ If you use an extension cord with the printer, make sure that the total ampere rating of the devices plugged into the extension cord does not exceed the cord's ampere rating. Also, make sure that the total ampere rating of all devices plugged into the wall outlet does not exceed the wall outlet's ampere rating.
- ❏ If you plan to use the printer in Germany, the building installation must be protected by a 10 or 16 amp circuit breaker to provide adequate short-circuit protection and over-current protection for the printer.
- ❏ When connecting the printer to a computer or other device with a cable, ensure the correct orientation of the connectors. Each connector has only one correct orientation. Inserting a connector in the wrong orientation may damage both devices connected by the cable.
- ❏ Place the printer on a flat, stable surface that extends beyond the base of the printer in all directions. The printer will not operate properly if it is tilted at an angle.
- ❏ Allow space above the printer so that you can fully raise the document cover.
- ❏ Leave enough space in front of the printer for the paper to be fully ejected.
- ❏ Avoid places subject to rapid changes in temperature and humidity. Also, keep the printer away from direct sunlight, strong light, or heat sources.

Advisories and Warnings for Using the Printer

- ❏ Do not insert objects through the slots in the printer.
- ❏ Do not put your hand inside the printer during printing.
- ❏ Do not touch the white flat cable and ink tubes inside the printer.
- ❏ Do not use aerosol products that contain flammable gases inside or around the printer. Doing so may cause fire.
- ❏ Do not move the print head by hand; otherwise, you may damage the printer.
- ❏ Be careful not to trap your fingers when closing the scanner unit.
- ❏ Do not press too hard on the scanner glass when placing the originals.

- ❏ Prolonged use of the printer when the ink level is below the lower line could damage the printer. Fill the ink tank to the upper line while the printer is not operating. To display the correct ink level estimates, reset the ink level after filling the tank.
- ❏ Always turn the printer off using the ⏻ button. Do not unplug the printer or turn off the power at the outlet until the ⏻ light stops flashing.
- ❏ If you are not going to use the printer for a long period, be sure to unplug the power cord from the electrical outlet.

Advisories and Warnings for Using the LCD Screen

- ❏ The LCD screen may contain a few small bright or dark spots, and because of its features it may have an uneven brightness. These are normal and do not indicate that it is damaged in any way.
- ❏ Only use a dry, soft cloth for cleaning. Do not use liquid or chemical cleaners.
- ❏ The exterior cover of the LCD screen could break if it receives a heavy impact. Contact your dealer if the screen's surface chips or cracks, and do not touch or attempt to remove the broken pieces.

Advisories and Warnings for Connecting to the Internet

Do not connect this product to the Internet directly. Connect it in a network protected by a router or firewall.

Advisories and Warnings for Using the Printer with a Wireless Connection

- ❏ Radio waves from this printer may negatively affect the operation of medical electronic equipment, causing it to malfunction. When using this printer inside medical facilities or near medical equipment, follow directions from the authorized personnel representing the medical facilities, and follow all posted warnings and directions on the medical equipment.
- ❏ Radio waves from this printer may negatively affect the operation of automatically controlled devices such as automatic doors or fire alarms, and could lead to accidents due to malfunction. When using this printer near automatically controlled devices, follow all posted warnings and directions on these devices.

Advisories and Warnings for Transporting or Storing the Printer

- ❏ When storing or transporting the printer, avoid tilting it, placing it vertically, or turning it upside down; otherwise ink may leak.
- ❏ Before transporting the printer, make sure that the print head is in the home (far right) position.

Notes on the Administrator Password

This printer allows you to set an administrator password to prevent unauthorized access or changes to the device settings and network settings stored in the product when connecting to a network.

Default Value of the Administrator Password

The default value of the administrator password is printed on the label on the product itself, such as the one shown.

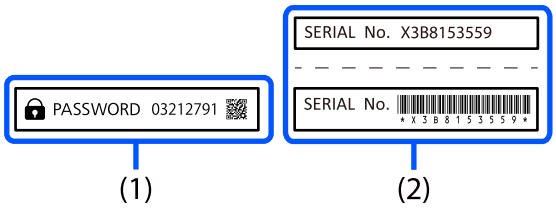

If both labels (1) and (2) are attached, the value next to PASSWORD written on the label in (1) is the default value. In this example, the default value is 03212791.

Note:
As the label (1) may be attached in a location that is difficult to see, check the information in the link to confirm the location.

https://support.epson.net/manu/adminpw/index.html

If you cannot find the label (1), the serial number printed on the label in (2) is the default value. In this example, the default value is X3B8153559.

Changing the Administrator Password

For security reasons, we recommend changing the initial password.

It can be changed from Web Config and Epson Device Admin. When changing the password, set it with at least 8 single-byte alphanumerical characters and symbols.

Related Information

➡ "Running Web Config on a Web Browser" on page 186

Operations that Require You to Enter the Administrator Password

If you are prompted to enter the administrator password when performing the following operations, enter the administrator password set on the printer.

❏ When updating the firmware of the printer from a computer or smart device

❏ When logging on to the advanced settings of Web Config

❏ When adjusting settings using an application that can change the printer's settings.

Initializing the Administrator Password

You can return the administrator password to its default setting by initializing the network settings.

Related Information

➡ "Restore Default Settings" on page 195

Protecting Your Personal Information

When you give the printer to someone else or dispose of it, erase all the personal information stored in the printer's memory by selecting **Settings** > **Restore Default Settings** > **Clear All Data and Settings** on the control panel.

Part Names and Functions

Front. 18

Inside. 19

Rear. 20

Front

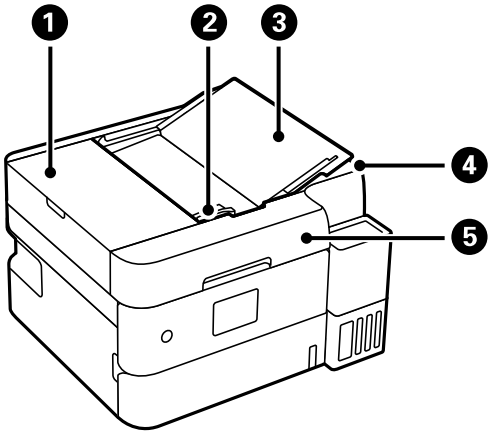

1	ADF cover (F)*	Open when removing jammed originals in the ADF.
2	ADF edge guide*	Feeds originals straight into the printer. Slide to the edge of the originals.
3	ADF document support*	Supports originals.
4	ADF output tray*	Holds originals ejected from the ADF.
5	ADF (Automatic Document Feeder)*	Holds multiple originals.

* Only for ET-3950 Series/L6370 Series

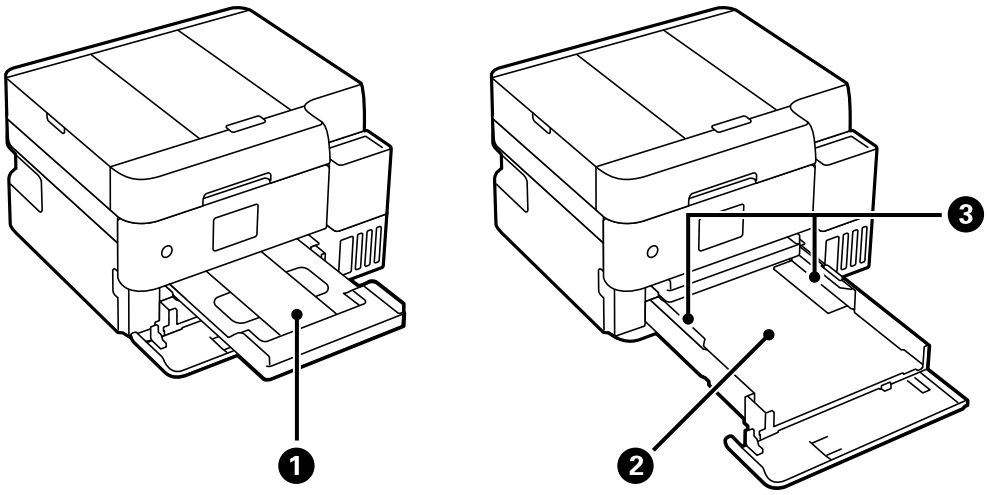

1	Output tray (G)	Holds the ejected paper.
2	Paper cassette	Loads paper.
3	Edge guide	Feeds the paper straight into the printer. Slide to the edges of the paper.

Inside

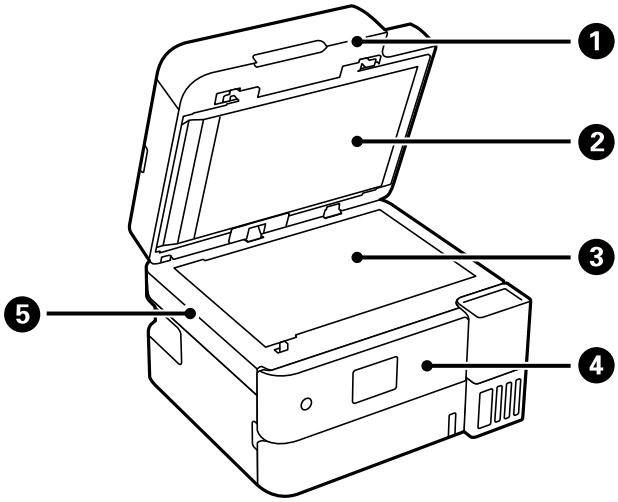

1	Document cover	Blocks external light while scanning.
2	Document mat (M)*	The mat inside the document cover.
3	Scanner glass	Place the originals.
4	Control panel	Allows you to make settings and perform operations on the printer.
5	Scanner unit	Scans placed originals. Open to remove jammed paper. This unit should usually be kept closed.

* Only for ET-3950 Series/L6370 Series

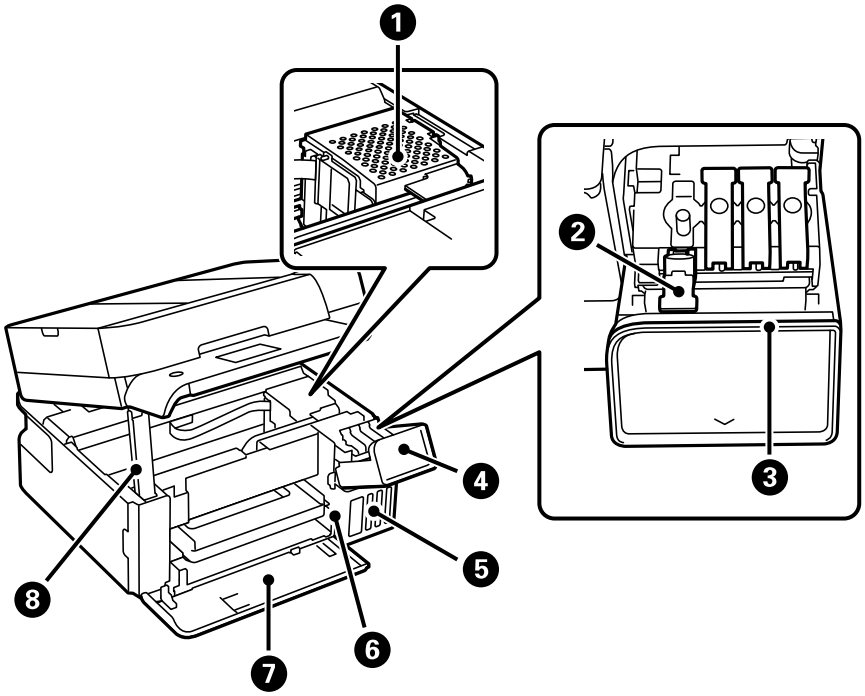

❶	Print head	Ink is ejected from the print head nozzles underneath.
❷	Ink tank cap	Open to refill the ink tank.
❸	Status light	A light to indicate the status of the printer. It flashes while a job is in progress. If it remains on after flashing, an error has occurred. See the following for troubleshooting instructions. "A Message is Displayed on the LCD Screen" on page 155
❹	Ink tank cover	Open to refill the ink tank.
❺	Ink reservoir tank (Ink tank)	Supplies ink to the print head.
❻	Ink tank unit	Contains the ink tanks.
❼	Front cover (C)	Opens automatically when printing starts.
❽	Scanner unit support	Supports the scanner unit when opening it.

Rear

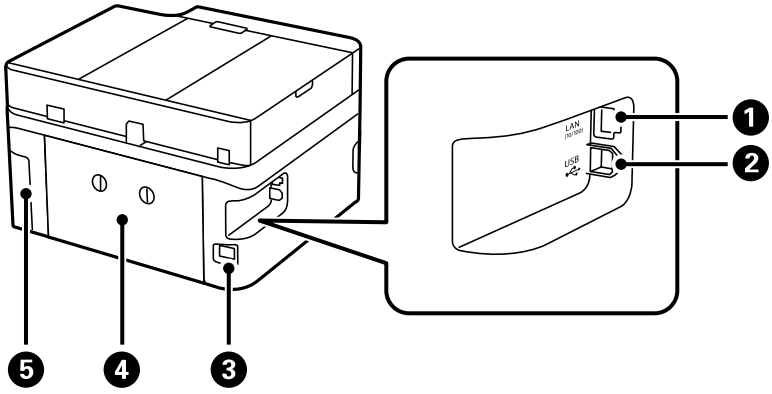

❶	LAN port	Connects a LAN cable.
❷	USB port	Connects a USB cable to connect with a computer.
❸	AC inlet	Connects the power cord.
❹	Rear cover (D)	Remove when removing jammed paper.
❺	Maintenance box cover (L)	Remove when replacing the maintenance box. The maintenance box is a container that collects a very small amount of surplus ink during cleaning or printing.

Guide to the Control Panel

Control Panel. 22

Home Screen Configuration. 23

Control Panel

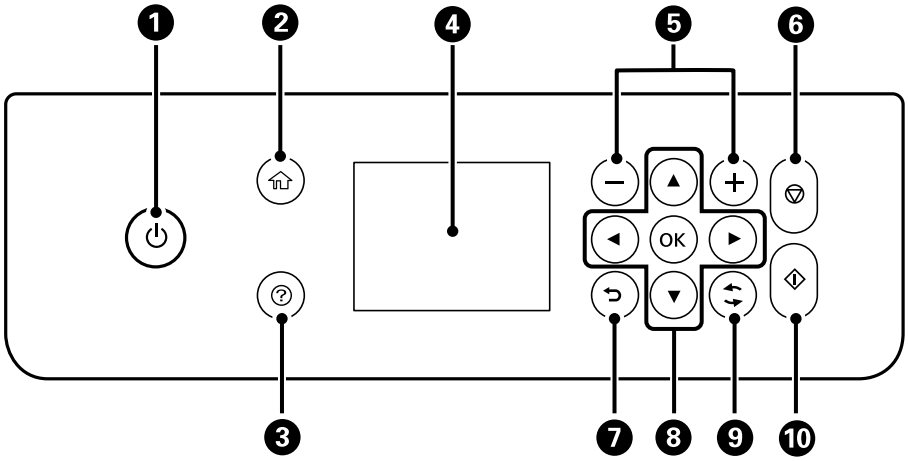

❶	Turns the printer on or off. Unplug the power cord after checking that the power light is off.
❷	Displays the home screen.
❸	Displays the solutions when you are in trouble.
❹	Displays menus and messages. Use buttons on the control panel to select a menu or to make settings.
❺	Selects the number of pages to print.
❻	Stops the current operation.
❼	Returns to the previous screen.
❽	Use the ▲▼◀▶ buttons to move the focus to the target, and then press the OK button to open the selected menu or to make settings.
❾	Applies to a variety of functions depending on the situation.
❿	Starts the operation you selected.

Home Screen Configuration

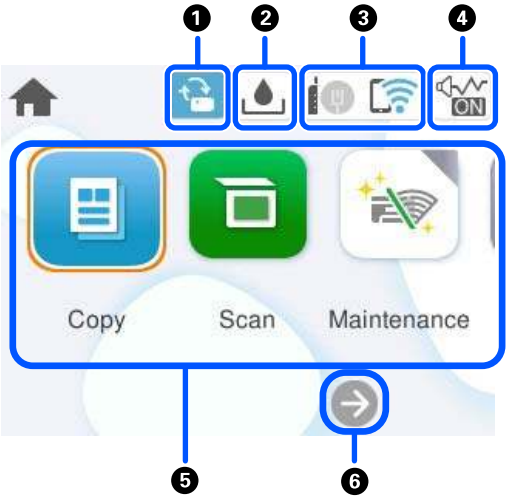

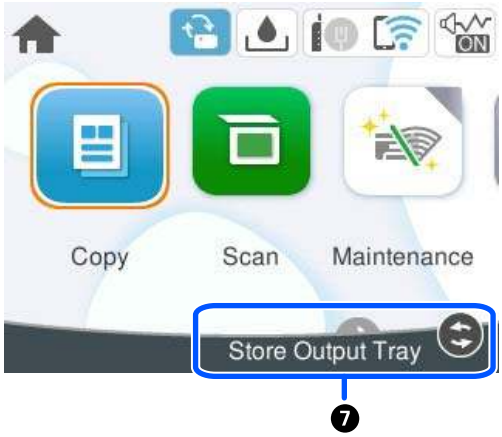

❶		This is displayed when a firmware update is available. Select it to update the firmware to improve the printer's features. We recommend using the printer with the latest version of the firmware.
❷		Displays the Remaining capacity of Maintenance box screen. You can check the approximate service life of maintenance box.
❸		Displays the network connection status. See the following for more details. "Guide to the Network Icons" on page 24
❹		Indicates that **Quiet Mode** is set for the printer. When this feature is enabled, the noise made by printer operations is reduced, but print speed may slow down. However, noises may not be reduced depending on the selected paper type and print quality. Select to change the setting. You can also make this setting from the **Settings** menu. **Settings** > **General Settings** > **Printer Settings** > **Quiet Mode**
❺	Displays each menu. ❑ Copy Allows you to copy documents. ❑ Scan Allows you to scan documents and save them to a computer. ❑ Maintenance Displays the menus recommended to improve the quality of your printouts such as unclogging nozzles by printing a nozzle check pattern and performing head cleaning, and improving blurring or banding in your printouts by aligning the print head. You can also make this setting from the **Settings** menu. **Settings** > **Maintenance** ❑ Settings Allows you to make settings related to maintenance, printer settings, and operations.	
❻		Scrolls the screen to the right.
❼		Press the button to store the output tray.

Guide to the Network Icons

	The printer is not connected to a wired (Ethernet) network or a wireless (Wi-Fi) network.
	The printer is connected to a wired (Ethernet) network.
	The printer is searching for an SSID or unset IP address, or having a problem with a wireless (Wi-Fi) network.
	The printer is connected to a wireless (Wi-Fi) network. The number of bars indicates the signal strength of the connection. The more bars there are, the stronger the connection.
	The printer is not connected to a wireless (Wi-Fi) network in Wi-Fi Direct (Simple AP) mode.
	The printer is connected to a wireless (Wi-Fi) network in Wi-Fi Direct (Simple AP) mode.

Loading Paper

Paper Handling Precautions. 26

Paper Size and Type Settings. 27

Loading Paper. 28

Paper Handling Precautions

- ❏ Read the instruction sheets supplied with the paper.
- ❏ To achieve high-quality printouts with genuine Epson paper, use the paper in the environment stated on the instruction sheets supplied with the paper.
- ❏ Fan and align the edges of the paper before loading. Do not fan or curl photo paper. Doing so may damage the printable side.

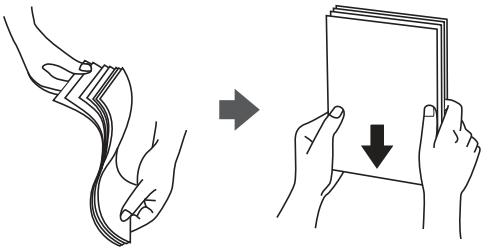

- ❏ If the paper is curled or folded, flatten it or curl it slightly in the opposite direction before loading. Printing on curled or folded paper may cause paper feeding problems and smears on the printouts.

- ❏ Paper feed problems may occur for manual 2-sided printing when printing on one side of pre-printed paper. Reduce the number of sheets to half or less, or load one sheet of paper at a time if paper jams continue.
- ❏ Make sure you are using long-grain paper. If you are not sure what type of paper you are using, check the paper packaging or contact the manufacturer to confirm the paper specifications.
- ❏ Fan and align the edges of envelopes before loading. When stacked envelopes are puffed up with air, press them down to flatten them before loading.

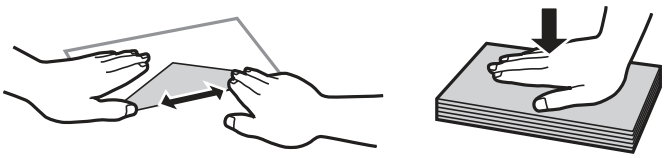

Related Information

➡ "Available Paper and Capacities" on page 179
➡ "Unavailable Paper Types" on page 182

Paper Size and Type Settings

If you register the paper size and type on the screen displayed when you load paper, the printer informs you when the registered information and print settings differ. This prevents you from wasting paper and ink by making sure you are not printing on the wrong paper size or printing in the wrong color due to using settings that do not match the paper type.

This screen is not displayed if you have disabled **Paper Setup Auto Display**. If you disable this feature, you cannot print from an iPhone, iPad, or iPod touch using AirPrint.

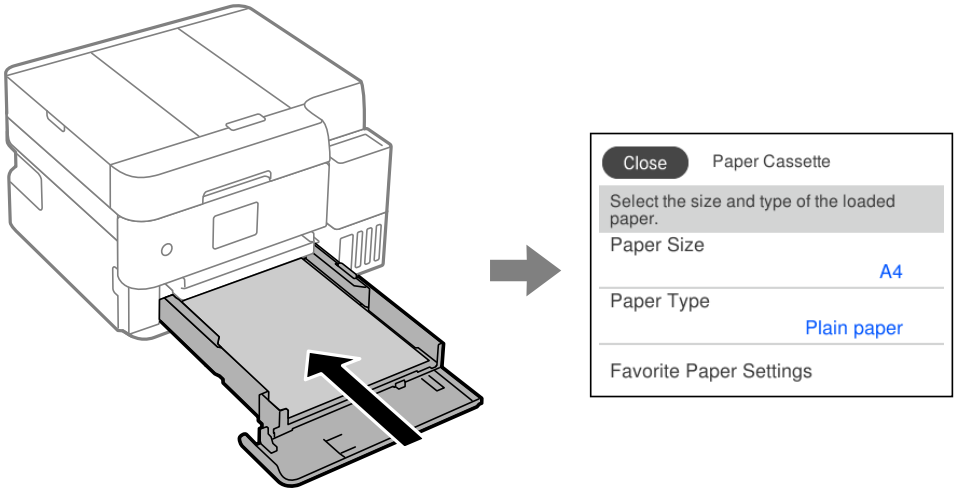

If displayed paper size and type differ from the loaded paper, select the item to change. If the settings match the loaded paper, close the screen.

Note:
You can also display the paper size and paper type settings screen by selecting ***Settings*** > ***General Settings*** > ***Printer Settings*** > ***Paper Source Setting*** > ***Paper Setting****.*

Related Information

➡ "Paper Setup Auto Display:" on page 189

List of Paper Type

To obtain optimum printing results, select the paper type that suits the paper.

Media Name	Media Type	
	Control Panel	**Printer Driver, Mobile Device**
Epson Bright White Ink Jet Paper	Plain paper	Plain paper
Epson Ultra Glossy Photo Paper	Ultra Glossy	Epson Ultra Glossy
Epson Premium Glossy Photo Paper	Prem. Glossy	Epson Premium Glossy
Epson Premium Semigloss Photo Paper	Prem. Semigloss	Epson Premium Semigloss
Epson Photo Paper Glossy	Glossy	Photo Paper Glossy

Media Name	Media Type	
	Control Panel	**Printer Driver, Mobile Device**
Epson Matte Paper-Heavyweight Epson Double-Sided Matte Paper	Matte	Epson Matte
Epson Photo Quality Ink Jet Paper Epson Double-sided Photo Quality Ink Jet Paper Epson Photo Quality Self Adhesive Sheets	Photo Quality Ink Jet	Epson Photo Quality Ink Jet

Loading Paper

You can load paper or envelopes by referring to the animations displayed on the printer's LCD screen.

Select ⓘ, and then select **How To** > **Load paper**.

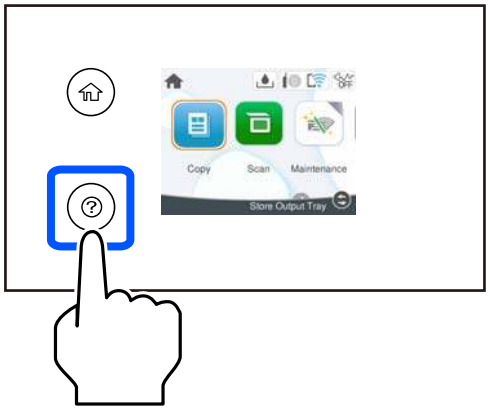

If you want to stop viewing the animation, close the screen.

Related Information

➡ "Paper Size and Type Settings" on page 27
➡ "Available Paper and Capacities" on page 179
➡ "Unavailable Paper Types" on page 182

Precautions when Loading Letterhead Paper

- ❏ For letterhead paper, select **Letterhead** as the paper type.
- ❏ For letterhead paper, if you print on paper that is smaller than the setting in the printer driver, the printer may print beyond the edges of the paper which can lead to ink smears on your printouts and excess ink building up inside the printer. Make sure you select the correct paper size setting.
- ❏ 2-sided printing and borderless printing are not available for letterhead paper. Also, the print speed may be slower.

Placing Originals

Placing Originals. 30

Originals that are not Supported by the ADF. 31

Placing Originals

Place originals on the scanner glass or the ADF.

You can place multiple originals in the ADF.

Follow the steps below to view the animations for placing originals.

Select ⓘ, and then select **How To** > **Place Originals**. Select the method of placing originals that you want to view. Select **Finish** to close the animation screen.

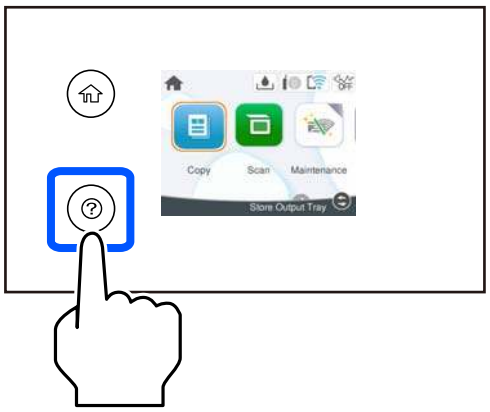

When using the scanner glass

> ⚠ ***Caution:***
>
> *Be careful not to trap your fingers when closing the document cover. Otherwise you may be injured.*

> **Important:**
>
> ❏ *When placing bulky originals such as books, prevent exterior light from shining directly onto the scanner glass.*
>
> ❏ *Do not apply too much force to the scanner glass or the document cover. Otherwise, they may be damaged.*

Note:

❏ *If there is any trash or dirt on the scanner glass, the scanning range may expand to include it, so the image of the original may be displaced or reduced. Remove any trash and dirt on the scanner glass before scanning.*

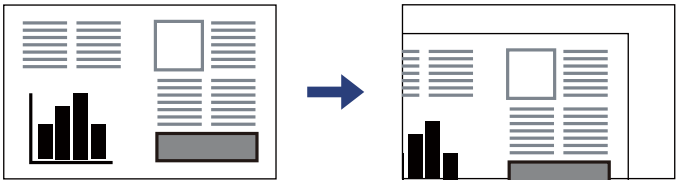

❏ *When originals are placed in the ADF and on the scanner glass, priority is given to the originals in the ADF.*

❏ *If you leave the originals on the scanner glass for a long time, they may stick to the surface of the glass.*

When using the ADF

Important:

❏ *Do not load originals above the line just under the triangle symbol inside the ADF edge guide.*

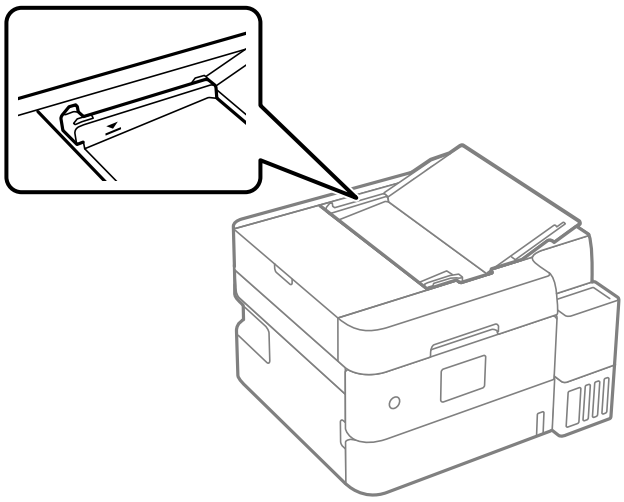

❏ *Do not add originals while scanning.*

Related Information

➡ "Scanner Specifications" on page 197

➡ "Originals that are not Supported by the ADF" on page 31

Originals that are not Supported by the ADF

Important:

Do not feed photographs or valuable original artwork into the ADF. Misfeeding may wrinkle or damage the original. Scan these documents on the scanner glass instead.

To prevent paper jams, avoid placing the following originals in the ADF. For these types, use the scanner glass.

❏ Originals that are torn, folded, wrinkled, deteriorated, or curled

❏ Originals with binder holes

❏ Originals held together with tape, staples, paper clips etc.

❏ Originals that have stickers or labels stuck to them

❏ Originals that are cut irregularly or not right angled

❏ Originals that are bound

❏ OHPs, thermal transfer paper, or carbon backs

Printing

Printing Documents. 33

Printing on Envelopes. 50

Printing Web Pages. 51

Printing Using a Cloud Service. 51

Printing Documents

Printing from a Computer

This section explains how to print a document from your computer using Windows as an example. On Mac OS, the procedure may be different or some features may not be supported.

Printing Using Easy Settings

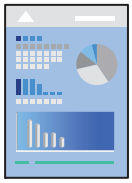

Note:
Operations may differ depending on the application. See the application's help for details.

1. Load paper in the printer.

   "Loading Paper" on page 28

2. Open the file you want to print.

3. Select **Print** or **Print Setup** from the **File** menu.

4. Select your printer.

5. Select **Preferences** or **Properties** to access the printer driver window.

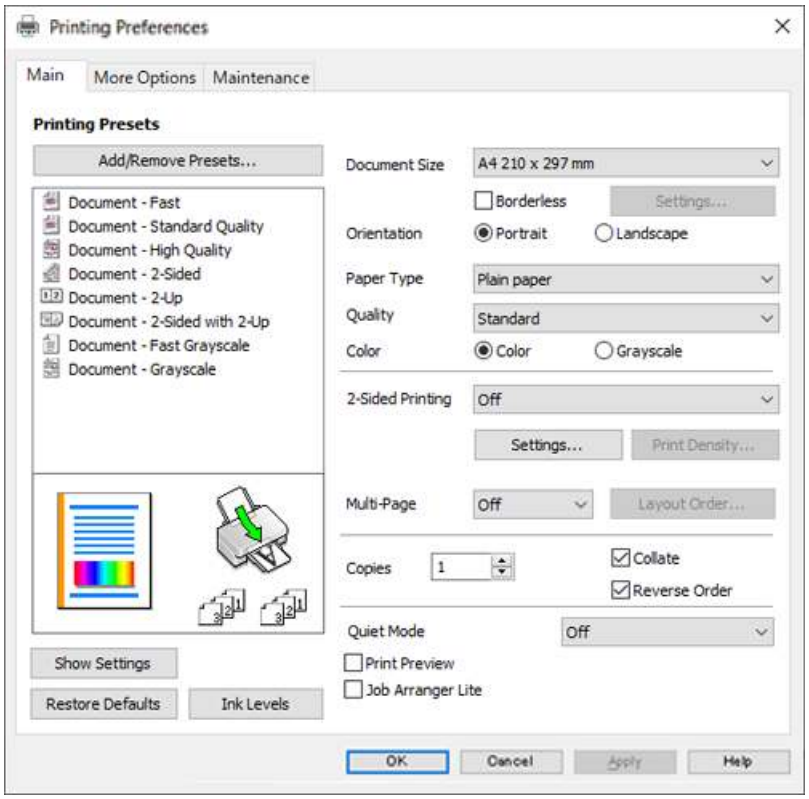

6. Change the settings as necessary.

   You can see the online help for explanations of the setting items. Right-clicking an item displays **Help**.

7. Click **OK** to close the printer driver window.

8. Click **Print**.

Related Information

➡ "List of Paper Type" on page 27
➡ "Available Paper and Capacities" on page 179

Adding Printing Presets for Easy Printing

If you create your own preset for frequently used print settings in the printer driver, you can print easily by selecting the preset from the list.

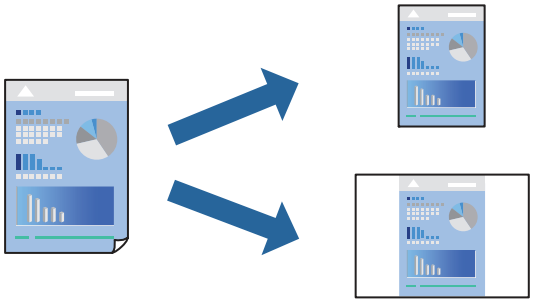

1. On the printer driver's **Main** or **More Options** tab, select the settings you want to include in the preset (such as **Document Size** and **Paper Type**).

2. Click **Add/Remove Presets** in **Printing Presets**.

3. Enter a **Name** and, if necessary, enter a comment.

4. Click **Save**.

   Note:
   *To delete an added preset, click **Add/Remove Presets**, select the preset name you want to delete from the list, and then delete it.*

5. Click **Print**.

The next time you want to print using the same settings, select the registered setting name from **Printing Presets**, and click **OK**.

Printing on 2-Sides

The printer driver will automatically print odd pages and even pages separately. When the odd pages have been printed, turn over the paper according to the instructions in the printer driver to print the even pages.

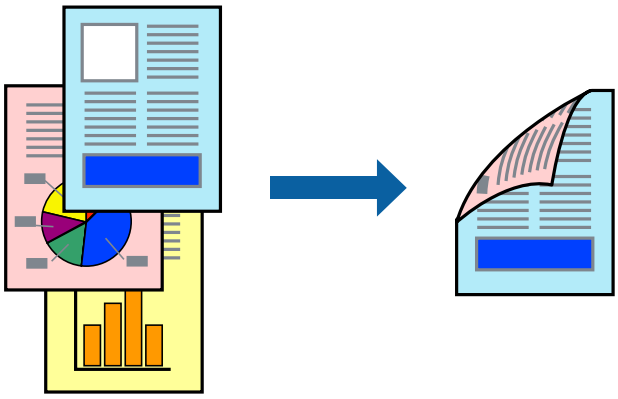

Note:
This feature is not available for borderless printing.

Access the printer driver, and then select the following settings.

Main tab > **2-Sided Printing**

Related Information

➡ "Paper for 2-Sided Printing" on page 181
➡ "Cannot Perform Manual 2-sided Printing (Windows)" on page 175

Printing a Booklet

You can also print a booklet that can be created by re-ordering the pages and folding the printout.

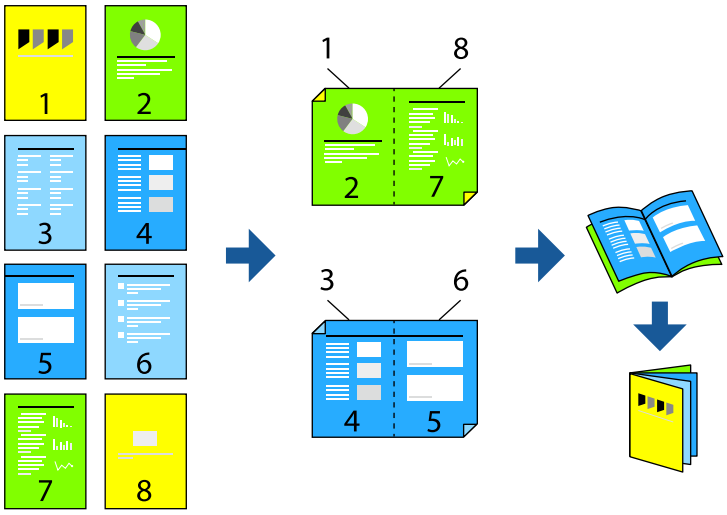

Note:
This feature is not available with borderless printing.

Access the printer driver, and then select the following settings.

On the **Main** tab, select the 2-sided printing method from **2-Sided Printing**, and then select **Settings** > **Booklet**.

Related Information

➡ "Paper for 2-Sided Printing" on page 181
➡ "Cannot Perform Manual 2-sided Printing (Windows)" on page 175

Printing Several Pages on One Sheet

You can print several pages of data on a single sheet of paper.

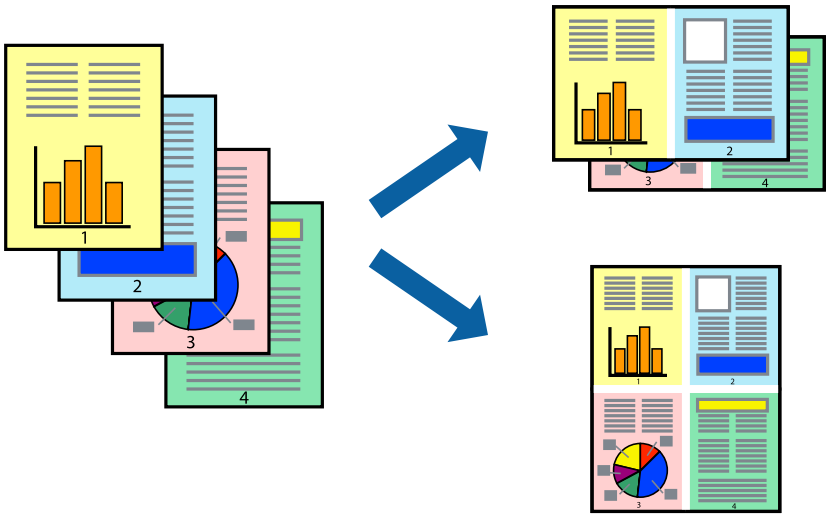

Note:
This feature is not available with borderless printing.

Access the printer driver, and then select the following settings.

Main tab > **Multi-Page** > **2-Up**, etc.

Printing to Fit the Paper Size

You can print to fit the paper size you loaded in the printer.

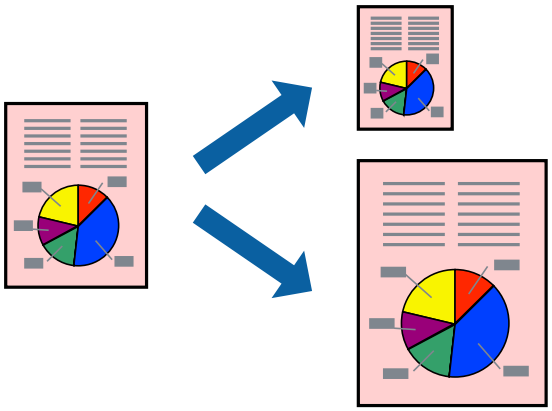

Note:
This feature is not available with borderless printing.

Access the printer driver, and then select the following settings.

On the **More Options** tab, select **Output Paper**, then select the size of the loaded paper.

Printing a Reduced or Enlarged Document at any Magnification

You can reduce or enlarge the size of a document by a specific percentage.

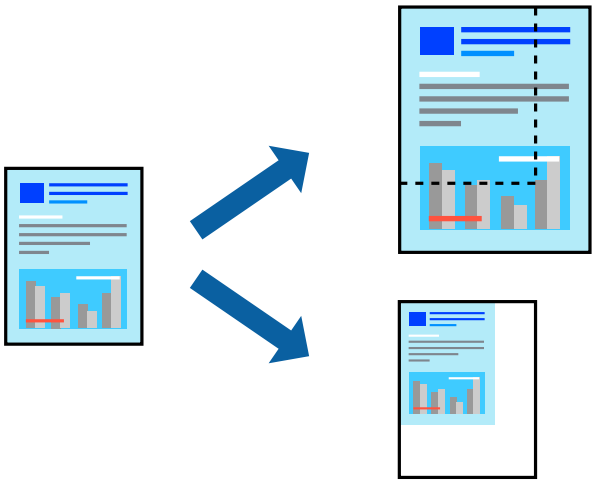

Note:
This feature is not available with borderless printing.

1. On the printer driver's **More Options** tab, select the document size from the **Document Size** setting.
2. Select the paper size you want to print on from the **Output Paper** setting.
3. Select **Reduce/Enlarge Document**, **Zoom to**, and then enter a percentage.

Printing One Image on Multiple Sheets for Enlargement (Creating a Poster)

This feature allows you to print one image on multiple sheets of paper. You can create a larger poster by taping them together.

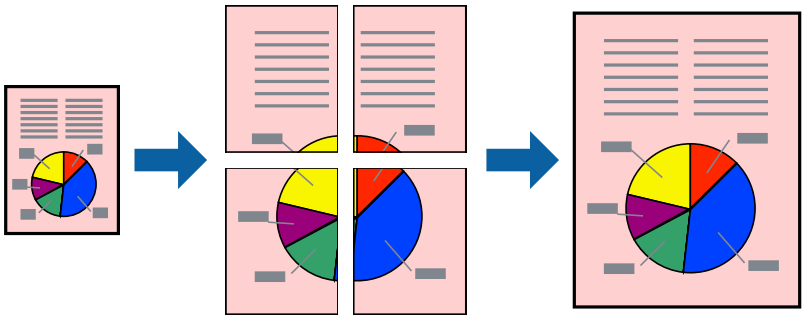

Note:
This feature is not available with 2-sided printing.

Access the printer driver, and then select the following settings.

Main tab > **Multi-Page** > **2x2 Poster**, etc.

Making Posters Using Overlapping Alignment Marks

Here is an example of how to make a poster when **2x2 Poster** is selected, and **Overlapping Alignment Marks** is selected in **Print Cutting Guides**.

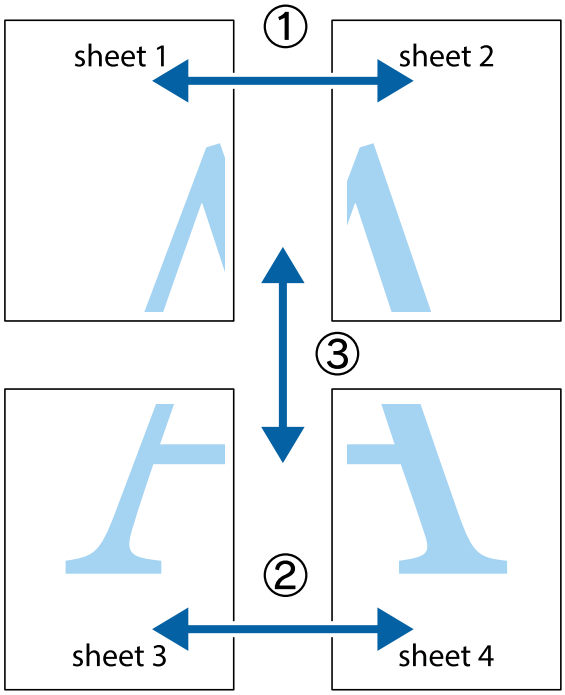

1. Prepare Sheet 1 and Sheet 2. Cut off the margins of Sheet 1 along the vertical blue line through the center of the top and bottom cross marks.

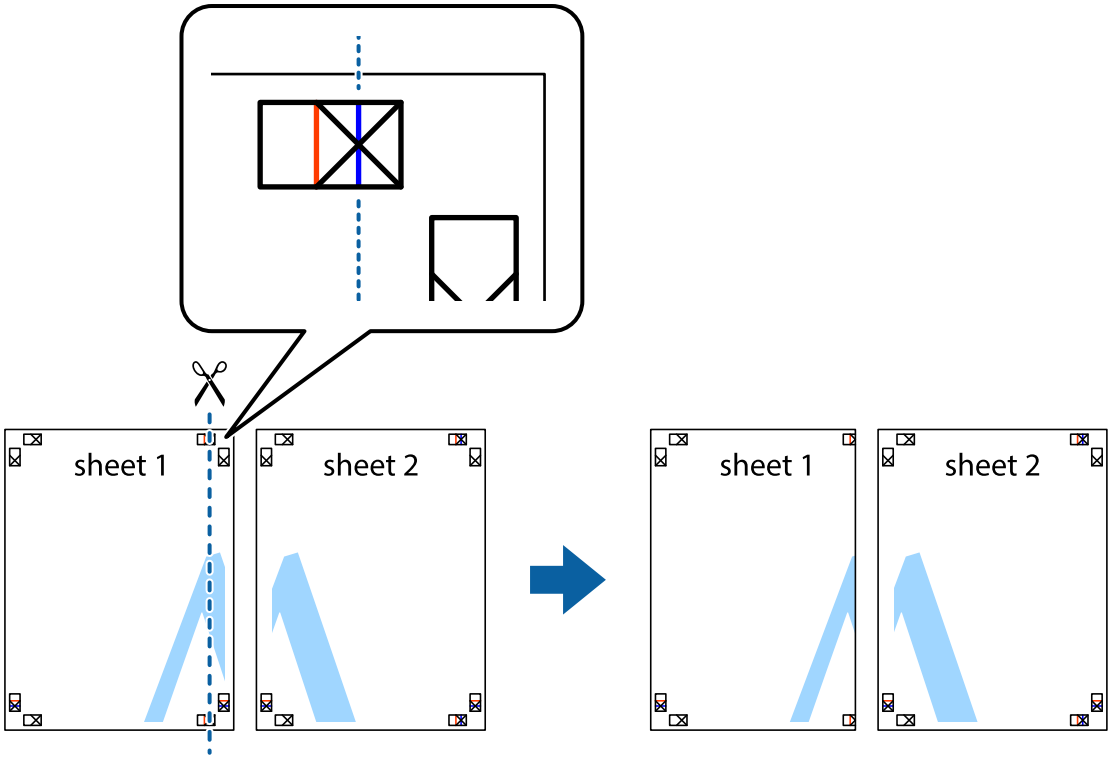

2. Place the edge of Sheet 1 on top of Sheet 2 and align the cross marks, then temporarily tape the two sheets together from the back.

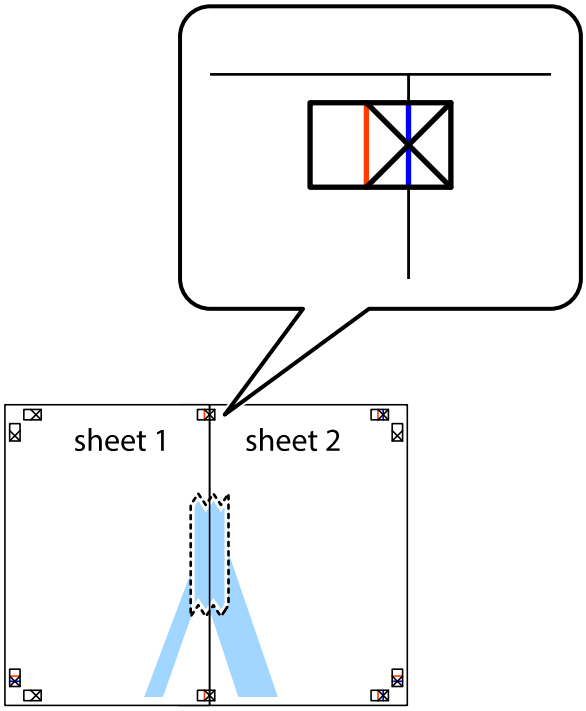

3. Cut the taped sheets in two along the vertical red line through the alignment markers (this time, the line to the left of the cross marks).

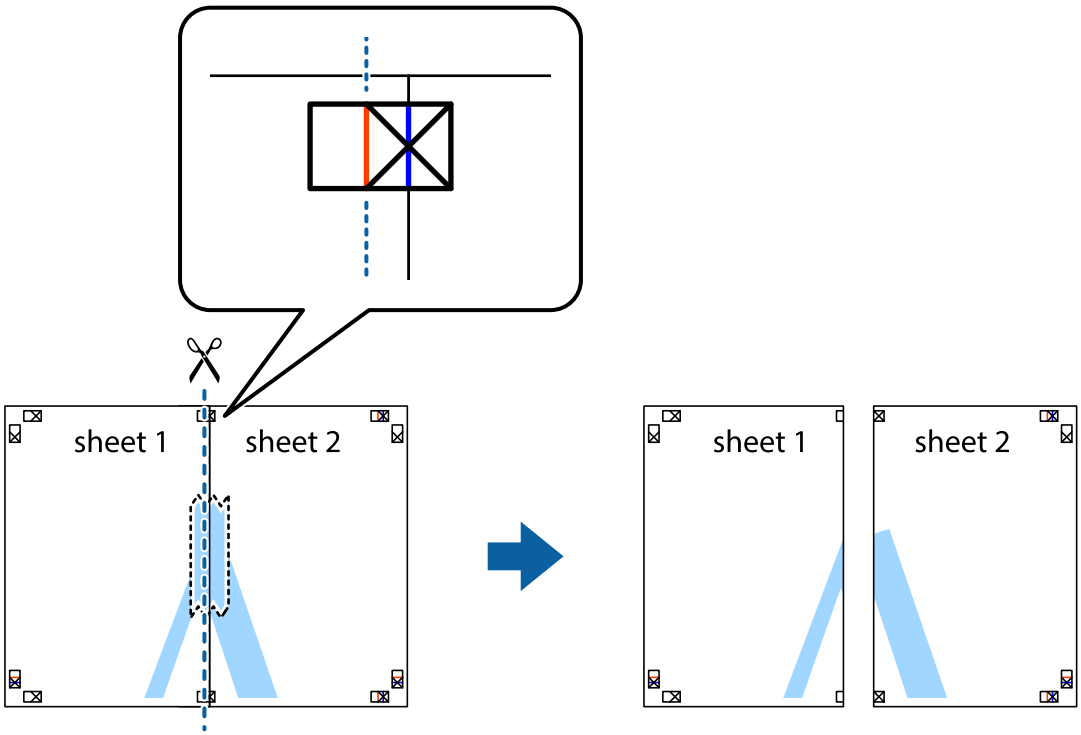

4. Tape the sheets together from the back.

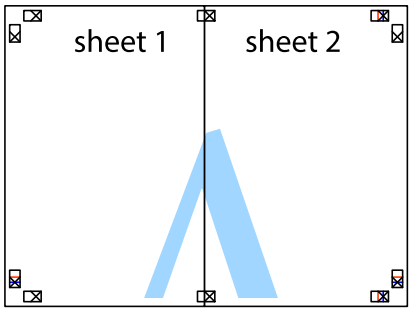

5. Repeat steps 1 to 4 to tape Sheet 3 and Sheet 4 together.

6. Cut off the margins of Sheet 1 and Sheet 2 along the horizontal blue line through the center of the left and right side cross marks.

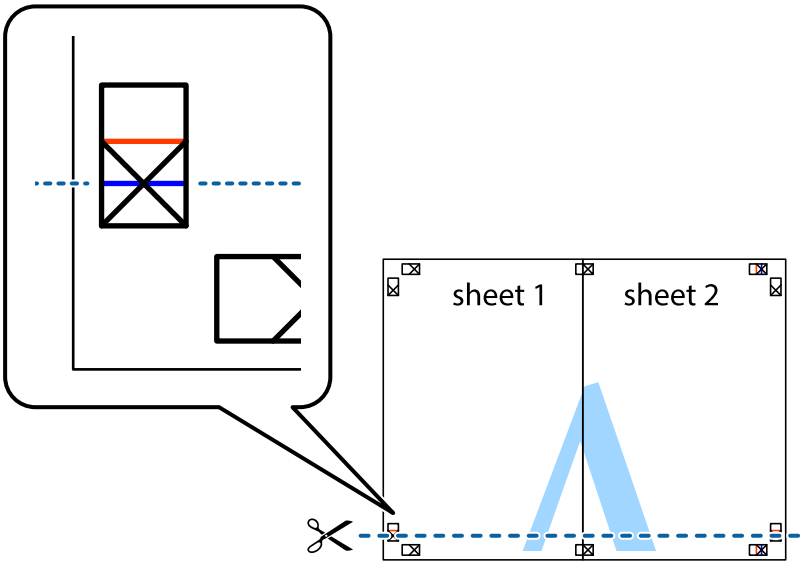

7. Place the edge of Sheet 1 and Sheet 2 on top of Sheet 3 and Sheet 4 and align the cross marks, and then temporarily tape them together from the back.

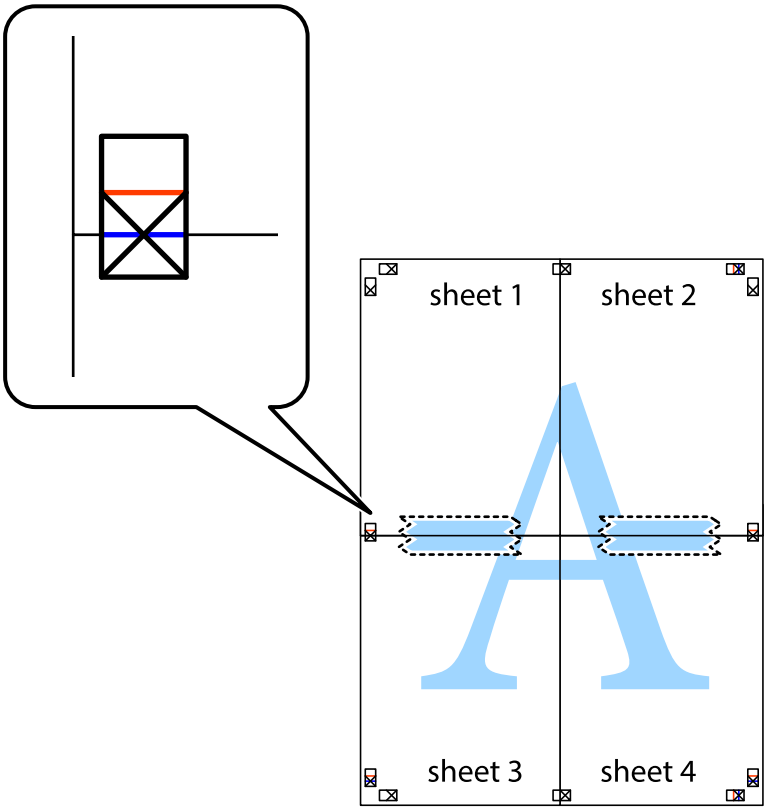

8. Cut the taped sheets in two along the horizontal red line through the alignment markers (this time, the line above the cross marks).

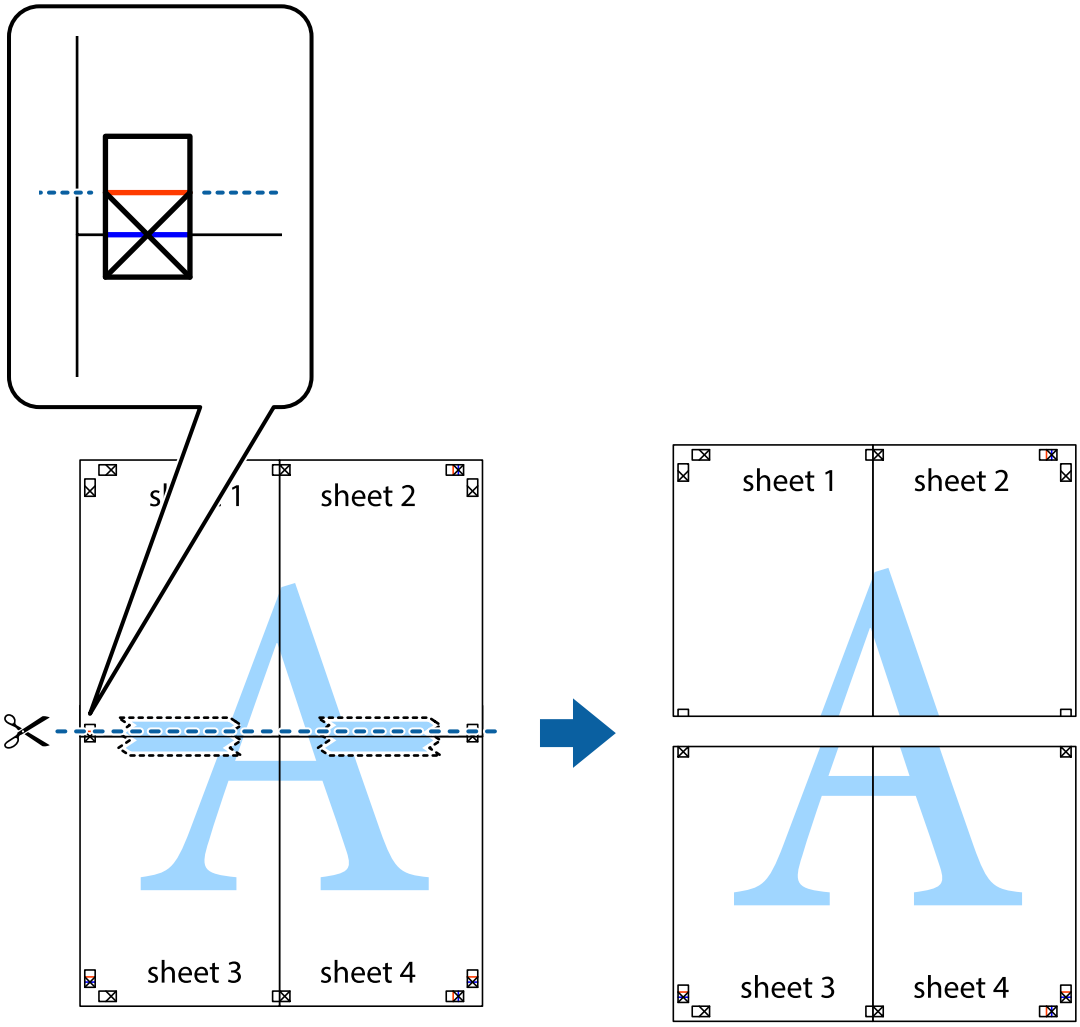

9. Tape the sheets together from the back.

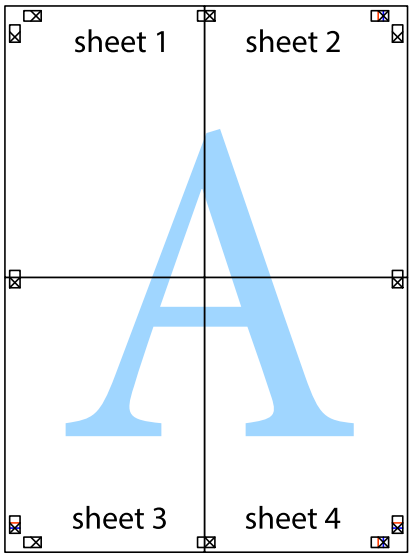

10. Cut off the remaining margins along the outer guide.

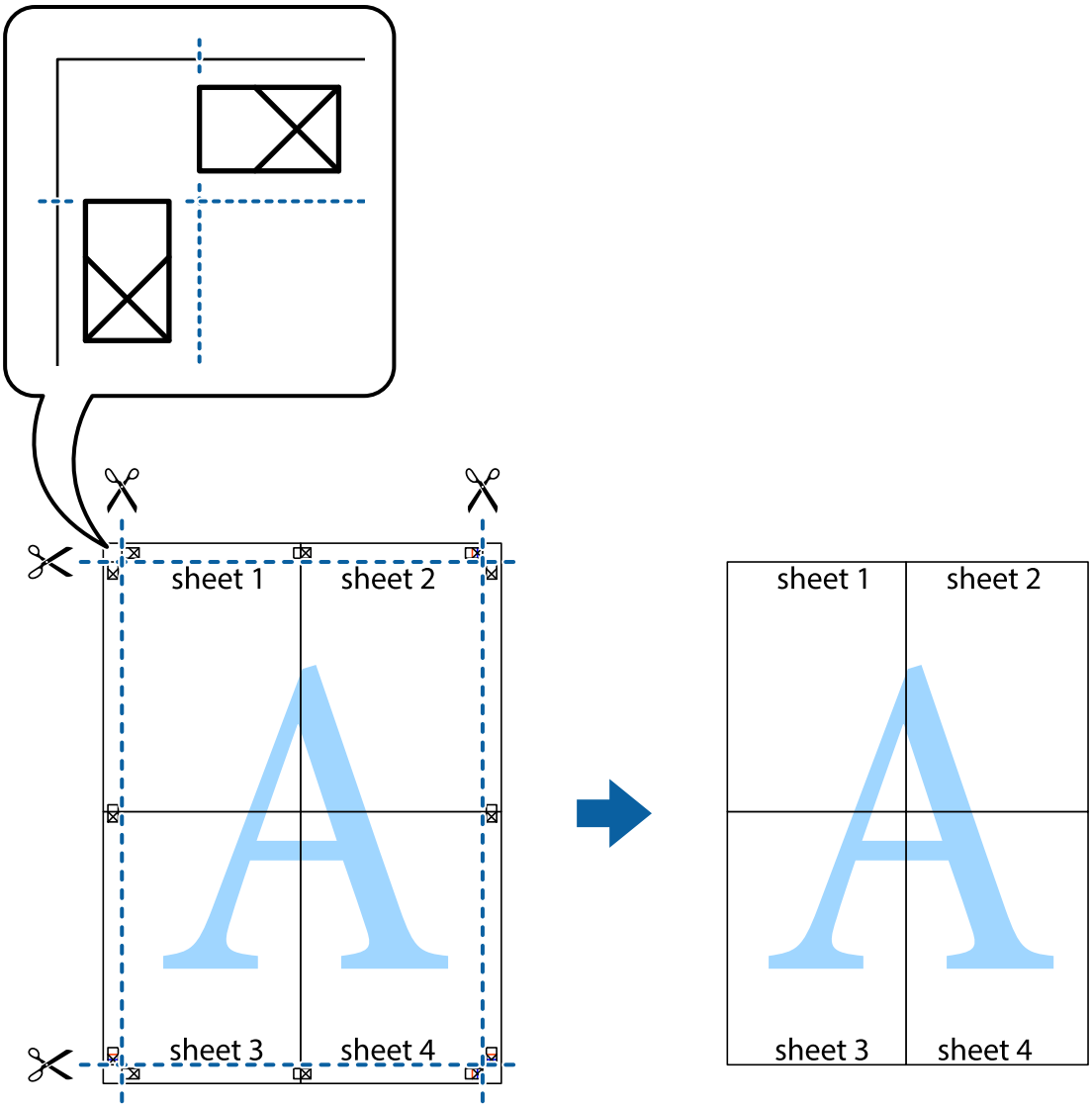

Printing with a Header and Footer

You can print information such as a user name and printing date in headers or footers.

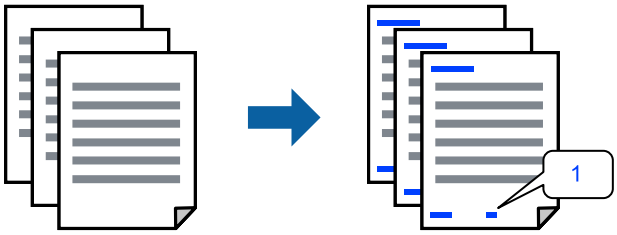

Access the printer driver, and then select the following settings.

More Options tab > **Watermark Features** > **Header/Footer**

Printing an Anti-Copy Pattern

You can print an anti-copy pattern on your printouts. When printing, the letters themselves are not printed and the entire print is screen-toned lightly. The hidden letters appear when photocopied to easily distinguish the original from the copies.

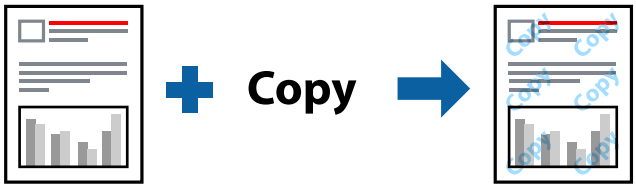

Anti-Copy Pattern is available under the following conditions:

- ❏ Paper Type: Plain paper, Letterhead
- ❏ Quality: Standard
- ❏ Auto 2-Sided Printing: Off
- ❏ Borderless: Not selected
- ❏ Color Correction: Automatic

Access the printer driver, and then make the following settings.

More Options tab > **Watermark Features** > **Anti-Copy Pattern**

Printing a Watermark

You can print a watermark such as "Confidential" on your printouts. You can also add your own watermark.

Note:
This feature is not available with borderless printing.

Access the printer driver, and then select the following settings.

More Options tab > **Watermark Features** > **Watermark**

Printing Multiple Files Together

Job Arranger Lite allows you to combine several files created by different applications and print them as a single print job. You can specify the print settings for combined files, such as multi-page layout, and 2-sided printing.

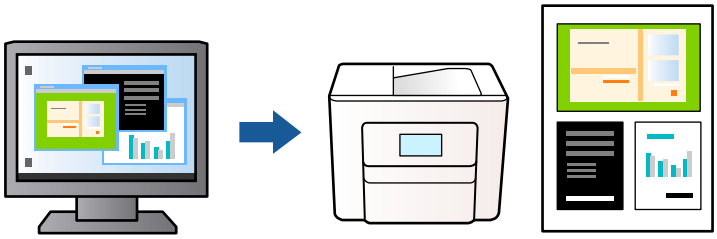

1. On the printer driver's **Main** tab, select **Job Arranger Lite**, and then click **OK**.
2. Click **Print**.

   When you start printing, the Job Arranger Lite window is displayed.
3. With the Job Arranger Lite window opened, open the file that you want to combine with the current file, and then repeat the above steps.
4. When you select a print job added to Print Project in the Job Arranger Lite window, you can edit the page layout.
5. Click **Print** from the **File** menu to start printing.

   Note:
   *If you close the Job Arranger Lite window before adding all the print data to the Print Project, the print job you are currently working on is canceled. Click **Save** from the **File** menu to save the current job. The extension of the saved files is "ecl".*

   *To open a Print Project, click **Job Arranger Lite** on the printer driver's **Maintenance** tab to open the Job Arranger Lite window. Next, select **Open** from the **File** menu to select the file.*

Printing Using the Color Universal Print Feature

You can enhance the visibility of texts and images in printouts.

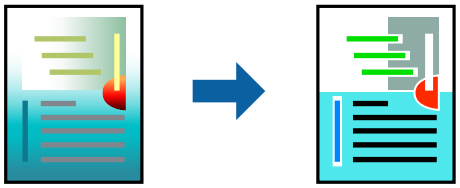

Color Universal Print is only available when the following settings are selected.

- ❏ Paper Type: Plain paper, Letterhead
- ❏ Quality: Standard or a higher quality
- ❏ Color: Color
- ❏ Applications: Microsoft® Office 2007 or later
- ❏ Text Size: 96 pts or smaller

Access the printer driver, and then make the following settings.

More Options tab > **Color Correction** > **Image Options** > **Color Universal Print**

Adjusting the Print Color

You can adjust the colors used in the print job. These adjustments are not applied to the original data.

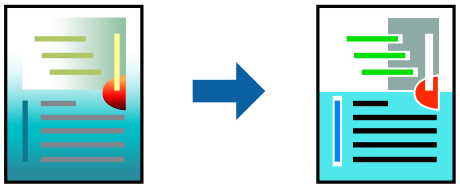

PhotoEnhance produces sharper images and more vivid colors by automatically adjusting the contrast, saturation, and brightness of the original image data.

Note:
PhotoEnhance *adjusts the color by analyzing the location of the subject. Therefore, if you have changed the location of the subject by reducing, enlarging, cropping, or rotating the image, the color may change unexpectedly. Selecting the borderless setting also changes the location of the subject resulting in changes in color. If the image is out of focus, the tone may be unnatural. If the color is changed or becomes unnatural, print in a mode other than* ***PhotoEnhance****.*

1. On the printer driver's **More Options** tab, select the method of color correction from the **Color Correction** setting.
   - ❏ Automatic: This setting automatically adjusts the tone to match the paper type and print quality settings.
   - ❏ Custom: Click **Advanced**, you can make your own settings.
2. Set the other items on the **Main** and **More Options** tabs as necessary, and then click **OK**.
3. Click **Print**.

Printing to Emphasize Thin Lines

You can thicken thin lines that are too thin to print.

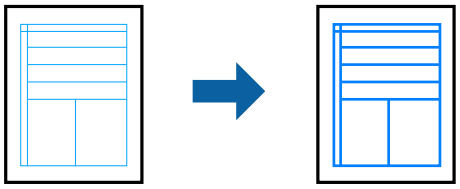

Access the printer driver, and then select the following settings.

More Options tab > **Color Correction** > **Image Options** > **Emphasize Thin Lines**

Printing Clear Bar Codes

If printed bar codes cannot be read correctly, you can print clearly using reduced ink bleeding. Only enable this feature if the bar code you printed cannot be scanned. Deblurring may not always be possible depending on the circumstances.

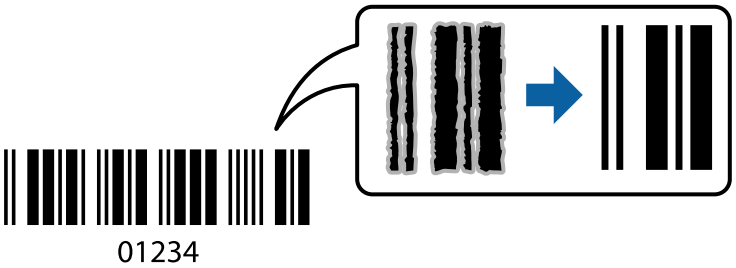

You can use this feature for the following paper types and print quality.

Plain paper, Envelope: Standard

Access the printer driver, and then make the following settings.

Maintenance tab > **Extended Settings** > **Barcode mode**

Printing Documents from Mobile Devices

You can print documents from a mobile device.

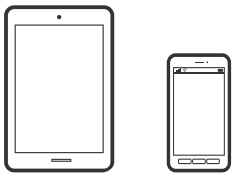

Printing Using Epson Smart Panel

Epson Smart Panel is an application that allows you to perform printer operations easily including printing, copying, or scanning from a mobile device. You can connect the printer and mobile device over a wireless network, check the ink levels and printer status, and check for solutions if an error occurs. You can also copy easily by registering a copy favorite.

Install Epson Smart Panel from the following URL or QR code.

https://support.epson.net/smpdl/

Start Epson Smart Panel, and then select the print menu on the home screen.

Printing Documents Using AirPrint

AirPrint enables instant wireless printing from iPhone, iPad, iPod touch, and Mac without the need to install drivers or download software.

Note:
If you disabled paper configuration messages on your printer control panel, you cannot use AirPrint. See the link below to enable the messages, if necessary.

1. Set up your printer for wireless printing. See the link below.

   https://epson.sn

2. Connect your Apple device to the same wireless network that your printer is using.

3. Print from your device to your printer.

   Note:
   For details, see the AirPrint page on the Apple website.

Related Information

➡ "Cannot Print Even Though a Connection has been Established (iOS)" on page 128

Printing Using Epson Print Enabler

You can wirelessly print your documents, emails, photos, and web pages right from your Android phone or tablet (Android v7.0 or later). With a few taps, your Android device will discover an Epson printer that is connected to the same wireless network.

Search for and install Epson Print Enabler from Google Play.

Go to **Settings** on your Android device, select **Printing**, and then enable Epson Print Enabler. From an Android application such as Chrome, tap the menu icon and print whatever is on the screen.

Note:
*If you do not see your printer, tap **All Printers** and select your printer.*

Printing Using Mopria Print Service

Mopria Print Service enables instant wireless printing from Android smartphones or tablets.

Install Mopria Print Service from Google Play.

For more details, access the Mopria Web site at https://mopria.org.

Printing on Envelopes

Printing on Envelopes from a Computer (Windows)

1. Load envelopes in the printer.
   "Loading Paper" on page 28
2. Open the file you want to print.
3. Access the printer driver window.
4. Select the envelope size from **Document Size** on the **Main** tab, and then select **Envelope** from **Paper Type**.
5. Set the other items on the **Main** and **More Options** tabs as necessary, and then click **OK**.
6. Click **Print**.

Printing on Envelopes from a Computer (Mac OS)

1. Load envelopes in the printer.
   "Loading Paper" on page 28
2. Open the file you want to print.
3. Select **Print** from the **File** menu or another command to access the print dialog.
4. Select the size as the **Paper Size** setting.
5. Select **Print Settings** from the pop-up menu.
6. Select **Envelope** as the **Media Type** setting.
7. Set the other items as necessary.
8. Click **Print**.

Printing Web Pages

Printing Web Pages from a Computer

Epson Photo+ allows you to display web pages, crop the specified area, and then edit and print them. See the application's help for details.

Printing Web Pages from Mobile Devices

Install Epson Smart Panel from the following URL or QR code.

https://support.epson.net/smpdl/

Open the web page you want to print in your web browser app. Tap **Share** from the menu of the web browser application, select **Smart Panel**, and then start printing.

Printing Using a Cloud Service

By using Epson Connect service available on the Internet, you can print from your smartphone, tablet PC, or laptop, anytime and practically anywhere. To use this service, you need to register the user and the printer in Epson Connect.

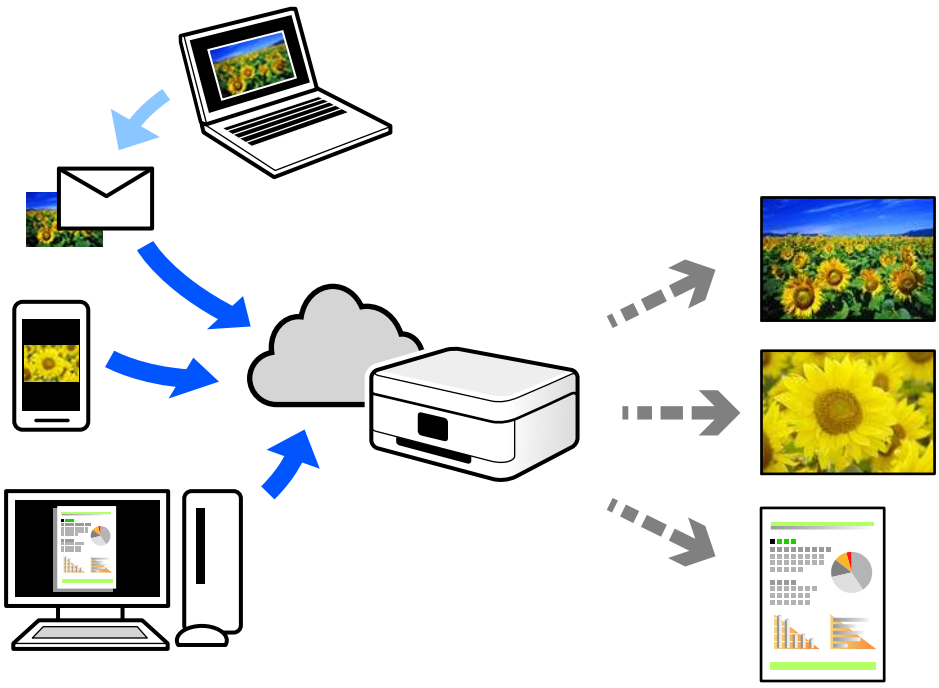

The features available on the Internet are as follows.

❏ Email Print

When you send an email with attachments such as documents or images to an email address assigned to the printer, you can print that email and the attachments from remote locations such as your home or office printer.

❏ Epson Smart Panel

This Application is for iOS and Android, and allows you to print or scan from a smart phone or tablet. You can print documents, images, and web sites by sending them directly to a printer on the same wireless LAN.

❏ Remote Print Driver

This is a shared driver supported by Remote Print Driver. When printing using a printer in a remote location, you can print by changing the printer on the usual applications window.

See the Epson Connect web portal for details on how to setup or print.

https://www.epsonconnect.com/

http://www.epsonconnect.eu (Europe only)

Copying

Available Copying Methods. 54

Basic Menu Options for Copying. 59

Advanced Menu Options for Copying. 60

Available Copying Methods

Place the originals on the scanner glass or the ADF, and then select the **Copy** menu on the home screen.

Copying Originals

You can copy the originals of fixed size or custom size by color or monochrome.

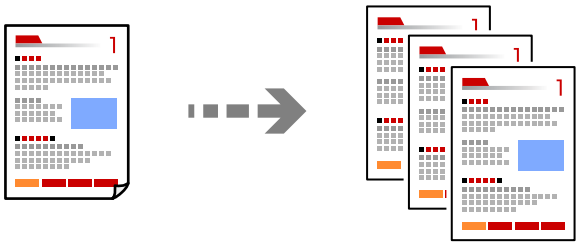

1. Load paper in the printer.

   "Loading Paper" on page 28

2. Place the originals.

   If you want to copy multiple originals, place all of the originals on the ADF.

   "Placing Originals" on page 30

3. Select **Copy** on the home screen.

   To select an item, use the ▲ ▼ ◀ ▶ buttons, and then press the OK button.

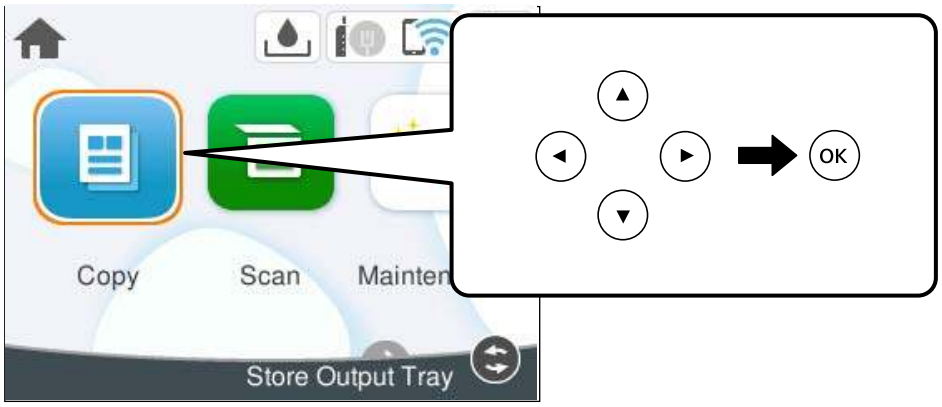

4. Select the **Copy** tab, and then select **B&W** or **Color**.

5. Press the ◇ button.

Copying on 2-Sides

Copy multiple originals on both sides of the paper.

1. Place all originals face up in the ADF.

> ***Important:***
> *If you want to copy originals that are not supported by the ADF, use the scanner glass.*
> *"Originals that are not Supported by the ADF" on page 31*

Note:
You can also place the originals on the scanner glass.
"Placing Originals" on page 30

2. Select **Copy** on the home screen.

   To select an item, use the ▲▼◀▶ buttons, and then press the OK button.

3. Select the **Copy** tab, and then select (**2-Sided**) , and then select the 2-sided menu option you want to perform.

4. Specify the original orientation and the binding position, and then select **OK**.

5. Press the ◇ button.

Copying by Enlarging or Reducing

You can copy originals at a specified magnification.

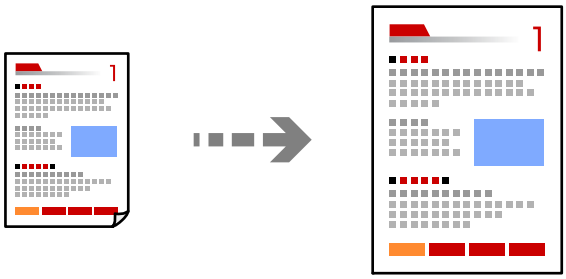

1. Place the originals.

   If you want to copy multiple originals, place all of the originals on the ADF.

   "Placing Originals" on page 30

2. Select **Copy** on the home screen.

   To select an item, use the ▲ ▼ ◀ ▶ buttons, and then press the OK button.

3. Select the **Advanced Settings** tab, select **Reduce/Enlarge**.

4. Specify the amount of enlargement or reduction, and then select **OK**.

5. Press the ⊡ button.

Related Information

➡ "Advanced Menu Options for Copying" on page 60

Copying Multiple Originals onto One Sheet

You can copy the multiple originals onto a single sheet.

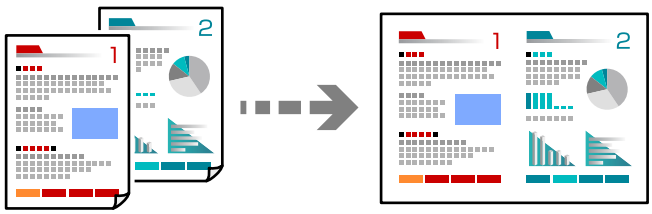

1. Place all originals face up in the ADF.

   "Placing Originals" on page 30

   Place them in the direction shown in the illustration.

❏ Portrait Originals

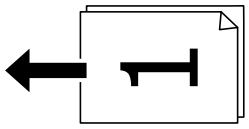

❏ Landscape Originals

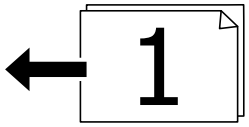

> ***Important:***
> *If you want to copy originals that are not supported by the ADF, use the scanner glass.*
> *"Originals that are not Supported by the ADF" on page 31*

Note:
You can also place the originals on the scanner glass.
"Placing Originals" on page 30

2. Select **Copy** on the home screen.

   To select an item, use the ▲▼◀▶ buttons, and then press the OK button.

3. Select the **Advanced Settings** tab, and then select **Multi-Page** > **2-up**.

4. Specify the layout order and the original orientation, and then select **OK**.

5. Press the ⊡ button.

Related Information

➡ "Advanced Menu Options for Copying" on page 60

Copying Originals Using Good Quality

You can copy originals without shadows and punched holes.

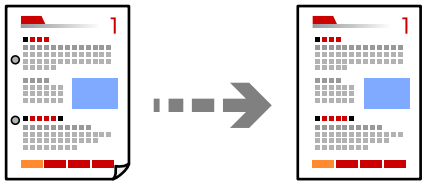

1. Place the originals.

   If you want to copy multiple originals, place all of the originals on the ADF.

   "Placing Originals" on page 30

2. Select **Copy** on the home screen.

   To select an item, use the ▲ ▼ ◀ ▶ buttons, and then press the OK button.

3. Select the **Advanced Settings** tab, select **Remove Shadow** or **Remove Punch Holes**, and then enable the setting.

4. Press the ⊡ button.

Copying ID card

Scans both sides of an ID card and copies onto one side of a paper.

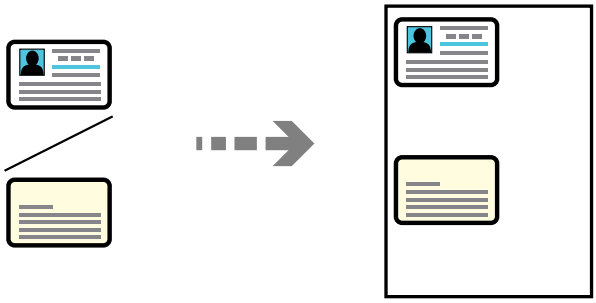

1. Place the original on the scanner glass.

   "Placing Originals" on page 30

2. Select **Copy** on the home screen.

   To select an item, use the ▲ ▼ ◀ ▶ buttons, and then press the OK button.

3. Select the **Advanced Settings** tab, and then enable **ID Card Copy**.

4. Specify the Orientation (Original), and then select **OK**.

5. Press the ⊡ button on the **Copy** tab.

Related Information

➡ "Advanced Menu Options for Copying" on page 60

Copying Without Margins

Copies without margins around the edges. The image is enlarged a little to remove margins from the edges of the paper.

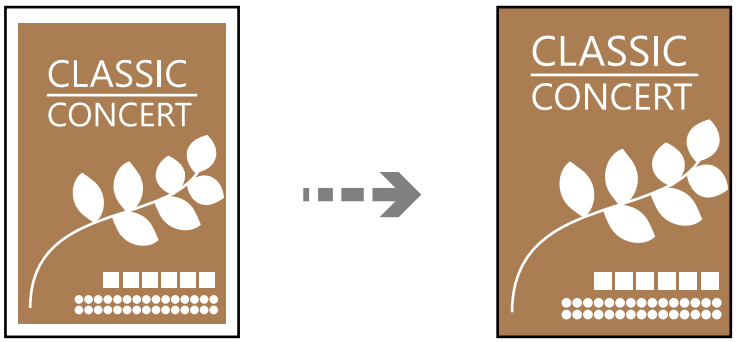

1. Place the original on the scanner glass.

   "Placing Originals" on page 30

2. Select **Copy** on the home screen.

   To select an item, use the ▲ ▼ ◀ ▶ buttons, and then press the OK button.

3. Select the **Advanced Settings** tab, and then enable **Borderless Copy**.

4. Specify the **Expansion**.

5. Press the ⊡ button.

Basic Menu Options for Copying

Note:
The items may not be available depending on other settings you made.

B&W:

Copies the original in black and white (monochrome).

Color:

Copies the original in color.

(2-Sided):

- ❑ 1→1-Sided

  Copies one side of an original onto a single side of paper.

- ❑ 2→2-Sided

  Copies both sides of a double-sided original onto both sides of a single sheet of paper. Select the orientation of your original and the binding position of the original and the paper.

❏ 1→2-Sided

Copies two single-sided originals onto both sides of a single sheet of paper. Select the orientation of your original and the binding position of the paper.

❏ 2→1-Sided

Copies both sides of a double-sided original onto one side of two sheets of paper. Select the orientation and the binding position of the original.

(Density):

Increase the level of density when the copying results are faint. Decrease the level of density when ink smears.

Advanced Menu Options for Copying

Note:
The items may not be available depending on other settings you made.

Paper Setting:

Select the paper size and the paper type you loaded.

Reduce/Enlarge:

Configures the magnification ratio of the enlargement or reduction. If you want to reduce or enlarge the original by a specific percentage, select the value, and then enter a percentage within a range of 25 to 400%.

❏ Actual Size

Copies at 100 % magnification.

❏ A4→A5 and others

Automatically enlarges or reduces the original to fit to a specific paper size.

❏ Auto Fit Page

Detects the scan area and automatically enlarges or reduces the original to fit to the paper size you selected. When there are white margins around the original, the white margins from the corner mark of the scanner glass are detected as the scan area, but the margins at the opposite side may be cropped.

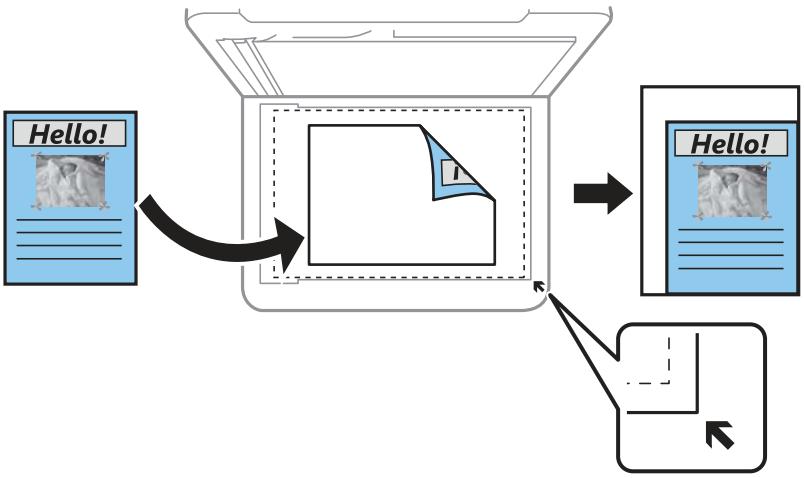

Original Size:

Select the size of your original. When copying non-standard size originals, select the size closest to your original.

Multi-Page:

❏ Off

Copies a single-sided original onto a single sheet.

❏ 2-up

Copies two single-sided originals onto a single sheet in 2-up layout.

Quality:

Select the quality for copying. Selecting **High** provides higher quality printing, but the printing speed may be slower.

Finishing:

Select how to eject the paper for multiple copies of multiple originals.

❏ Group (Same Pages)

Copies the originals by page as a group.

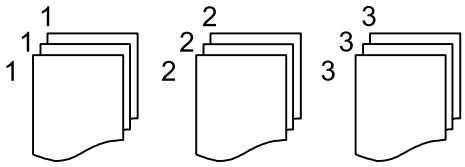

❏ Collate (Page Order)

Copies the originals collated in order and sorted into sets.

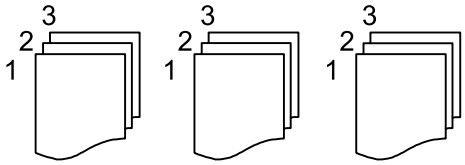

Original Orientation:

Select the orientation of your original.

Remove Shadow:

Removes shadows in the original that appear in the copies.

❏ Surround

Removes shadows that appear around copies when copying thick paper.

❏ Center

Removes shadows that appear in the center of copies when copying a booklet.

Remove Punch Holes:

Removes the binding holes when copying.

ID Card Copy:

Select to scan both sides of an ID card and copies onto one side of a paper.

Borderless Copy:

Select to copy without margins around the edges. The image is enlarged a little to remove margins from the edges of the paper. Select how much to enlarge in the **Expansion** setting.

Clear All Settings:

Select to reset the copy settings to their defaults.

Scanning

Basic Information on Scanning. 64

Scanning Originals to a Computer. 68

Scanning Originals to the Cloud. 70

Scanning Originals Using WSD. 73

Scanning Originals to a Mobile Device. 74

Advanced Scanning. 74

Basic Information on Scanning

What is a "Scan"?

A "scan" is the process of converting the optical information of paper data (such as documents, magazine clippings, photos, and handwritten illustrations) into digital image data.

You can save scanned data as a digital image such as a JPEG or PDF.

You can then print the image, send it by email, or share the image in other ways.

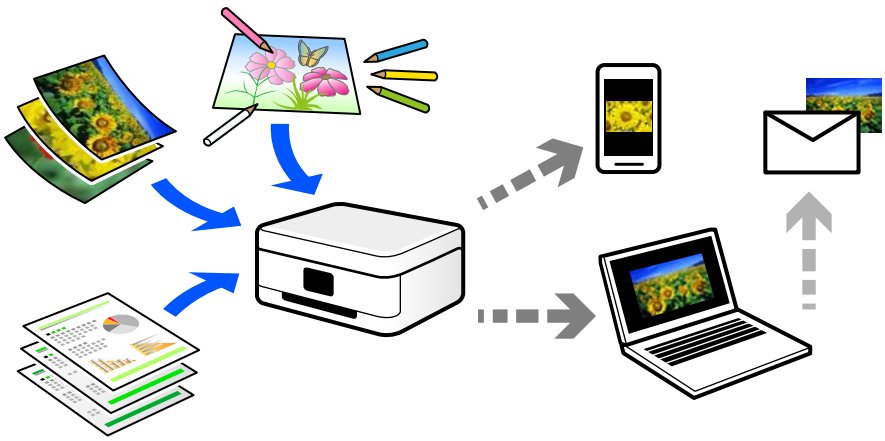

Scanning Uses

You can use scanning in a variety of ways to make your life more convenient.

- ❏ By scanning a paper document and turning it into digital data, you can read it on a computer or a mobile device.
- ❏ By scanning tickets or flyers into digital data, you can dispose of the originals and reduce clutter.
- ❏ By scanning important documents, you can back them up to cloud services or another storage medium, just in case they get lost.
- ❏ You can send the scanned photos or documents to friends by email.
- ❏ By scanning hand-drawn illustrations, you can share them on social media at a much higher quality than by just taking a photo on your mobile device.
- ❏ By scanning your favorite pages from newspapers or magazines, you can save them and dispose of the originals.

Available Scanning Methods

You can use any of the following methods to scan using this printer.

Scanning to a Computer

There are two methods of scanning originals to a computer; scanning using the printer's control panel, and scanning from the computer.

You can scan easily from the control panel.

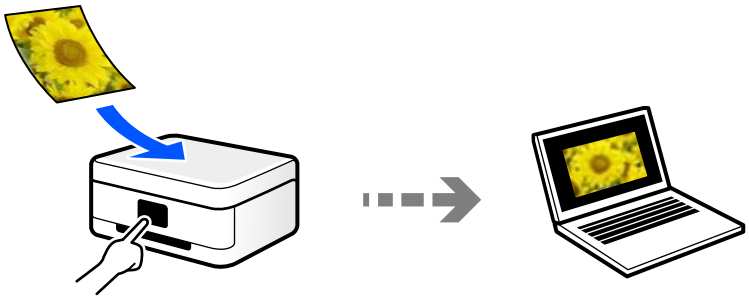

Use the scanning application Epson ScanSmart to scan from the computer. You can edit images after scanning.

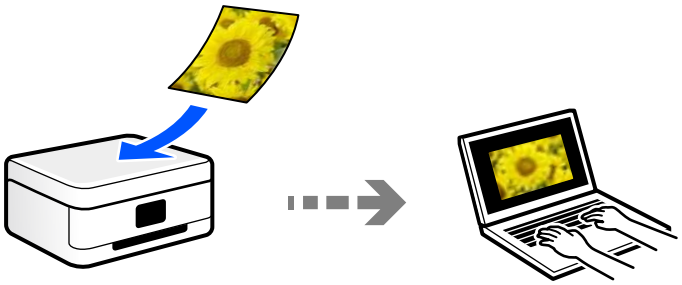

Scanning Using WSD

You can save the scanned image to a computer connected to the printer, using WSD feature.

If you are using Windows 7, you need to select WSD settings on your computer before scanning.

Setting Up a WSD Port

This section explains how to set up a WSD port for Windows 7.

Note:
For Windows 8 or later, the WSD port is set up automatically.

The following is necessary to set up a WSD port.

❏ The printer and the computer are connected to the network.

❏ The printer driver is installed on the computer.

1. Turn the printer on.

2. Click start, and then click **Network** on the computer.

3. Right-click the printer, and then click **Install**.

   Click **Continue** when the **User Account Control** screen is displayed.

Click **Uninstall** and start again if the **Uninstall** screen is displayed.

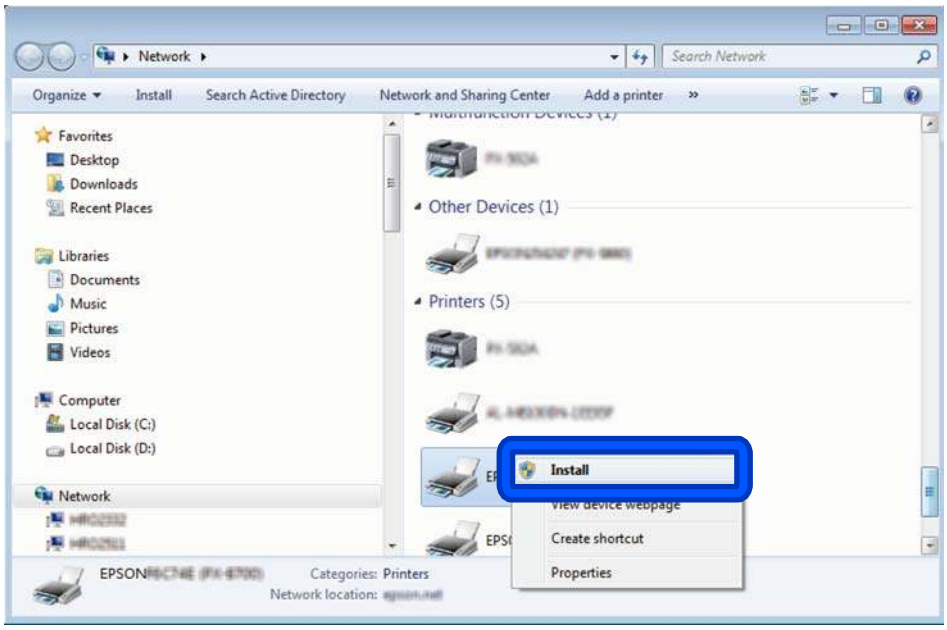

Note:
The printer name you set on the network and model name (EPSON XXXXXX (XX-XXXX)) are displayed on the network screen. You can check the printer's name set on the network from the printer's control panel or by printing a network status sheet.

4. Click **Your device is ready to use**.

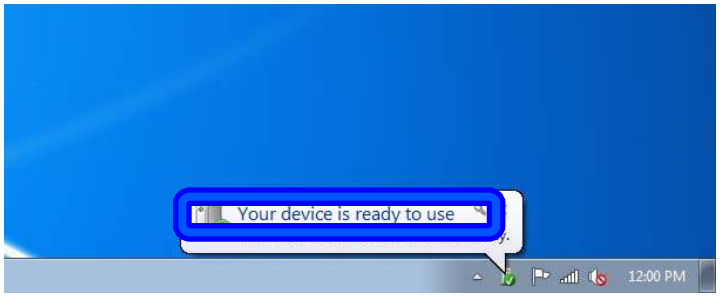

5. Check the message, and then click **Close**.

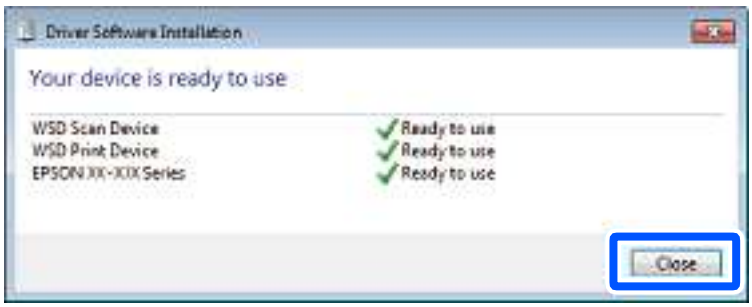

6. Open the **Devices and Printers** screen.

   Click start > **Control Panel** > **Hardware and Sound** (or **Hardware**) > **Devices and Printers**.

7. Check that an icon with the printer's name on the network is displayed.

   Select the printer name when using with WSD.

Scanning Directly from Mobile Devices

You can save scanned images directly to a mobile device by using the Epson Smart Panel application.

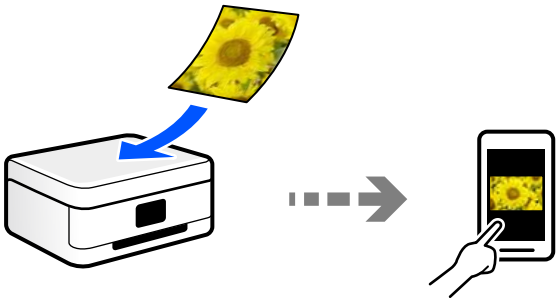

Recommended File Formats

Generally speaking, the JPEG format is suitable for photos while the PDF format is suitable for documents.

See the following descriptions to choose the best format for what you want to do.

File Format	Description
JPEG (.jpg)	A file format that allows you to compress the data to be saved. If the compression ratio is high, the image quality declines, and you cannot convert the image back to the original quality. This is the standard image format for digital cameras. This format is suitable for images that have many colors.
PDF (.pdf)	A general file format that can be used across different operating systems and provides the same level of screen display and print result. Also, you can save multiple scans as a one file. You can view PDF files using dedicated PDF reading software or in web browsers.

Recommended Resolutions

Resolution indicates the number of pixels (smallest area of an image) for each inch (25.4 mm), and is measured in dpi (dots per inch). The advantage of increasing the resolution is that the details in the image become fine. However, it can also have the following disadvantages.

❏ The file size becomes large

(When you double the resolution, the file size becomes about four times larger.)

❏ Scanning, saving, and reading the image takes a long time

❏ The image becomes too large to fit the display or print on the paper

See the table and set the appropriate resolution for the purpose of your scanned image.

Purpose	Resolution (Reference)
Displaying on a computer Sending by email	Up to 200 dpi
Printing using a printer	200 to 300 dpi

Scanning Originals to a Computer

There are two methods of scanning originals to a computer; scanning using the printer's control panel, and scanning from the computer.

Scanning from the Control Panel

To use this feature, make sure the following applications are installed on your computer.

OS	Application Required for Use	Checking for Installed Applications
Windows 11	❑ Epson ScanSmart ❑ Epson Scan 2	Click the start button, and then check the **All apps** > **Epson Software** folder > **Epson ScanSmart**, and the **EPSON** folder > **Epson Scan 2**.
Windows 10	❑ Epson ScanSmart ❑ Epson Scan 2	Click the start button, and then check the **Epson Software** folder > **Epson ScanSmart**, and the **EPSON** folder > **Epson Scan 2**.
Windows 8.1 / Windows 8	❑ Epson ScanSmart ❑ Epson Scan 2	Enter the application name in the search charm, and then check the displayed icon.
Windows 7	❑ Epson ScanSmart ❑ Epson Scan 2	Click the start button, and then select **All Programs**. Next, check the **Epson Software** folder > **Epson ScanSmart**, and the **EPSON** folder > **Epson Scan 2**.
OS X El Capitan (10.11) or later	❑ Epson ScanSmart ❑ Epson Scan 2	Select **Go** > **Applications** > **Epson Software**.
OS X Yosemite (10.10) / OS X Mavericks (10.9.5)	❑ Epson Event Manager ❑ Epson Scan 2	Select **Go** > **Applications** > **Epson Software**.

If the application is not installed, download and install it from the Epson website.

www.epson.com

Note:
For Windows Server operating systems, you can not use this feature.

1. Place the originals.

   "Placing Originals" on page 30

2. Select **Scan** on the control panel.

   To select an item, use the ▲▼◀▶ buttons, and then press the OK button.

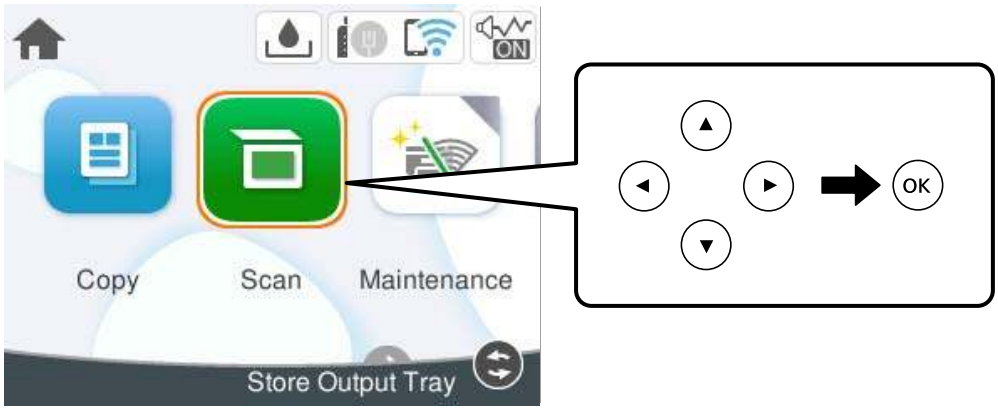

3. Select **Computer**.

4. Select a computer on which to save the scanned images.
   - ❏ If the **Select Computer** screen is displayed, select the computer from the screen.
   - ❏ If the **Scan to Computer** screen is displayed and the computer is already selected, make sure the selected computer is correct. If you want to change the computer, select , and then select another computer.

5. Select to select how to save the scanned image to a computer.
   - ❏ Preview on Computer (Windows, or OS X El Capitan (10.11) or later): Previews the scanned image on a computer before saving images.
   - ❏ Save as JPEG: Saves the scanned image in JPEG format.
   - ❏ Save as PDF: Saves the scanned image in PDF format.

6. Press the ◇ button.

When using Windows, or OS X El Capitan (10.11) or later: Epson ScanSmart automatically starts on your computer, and scanning starts.

Note:
- *See the Epson ScanSmart help for detailed operation information for the software. Click **Help** on the Epson ScanSmart screen to open the help.*
- *The color, size, and border of the scanned image will not be exactly the same as the original.*

Scanning from a Computer

You can scan from a computer by using Epson ScanSmart.

This application allows you to scan documents and photos easily, and then save the scanned images in simple steps.

Note:
Windows Server operating systems are not supported.

1. Place the originals.

   "Placing Originals" on page 30

2. Start Epson ScanSmart.
   - Windows 11

     Click the start button, and then select **All apps** > **Epson Software** > **Epson ScanSmart**.
   - Windows 10

     Click the start button, and then select **Epson Software** > **Epson ScanSmart**.
   - Windows 8.1/Windows 8

     Enter the application name in the search charm, and then select the displayed icon.
   - Windows 7

     Click the start button, and then select **All Programs** > **Epson Software** > **Epson ScanSmart**.
   - Mac OS

     Select **Go** > **Applications** > **Epson Software** > **Epson ScanSmart**.

3. When the Epson ScanSmart screen is displayed, follow the on-screen instructions to scan.

   Note:
   *Click **Help** to view detailed operation information.*

Scanning Originals to the Cloud

You can send scanned images to cloud services. Before using this feature, make settings using Epson Connect. See the following Epson Connect portal website for details.

https://www.epsonconnect.com/

http://www.epsonconnect.eu (Europe only)

1. Make sure that you have made settings using Epson Connect.

2. Place the original.

   "Placing Originals" on page 30

3. Select **Scan** on the control panel.

   To select an item, use the ▲▼◀▶ buttons, and then press the OK button.

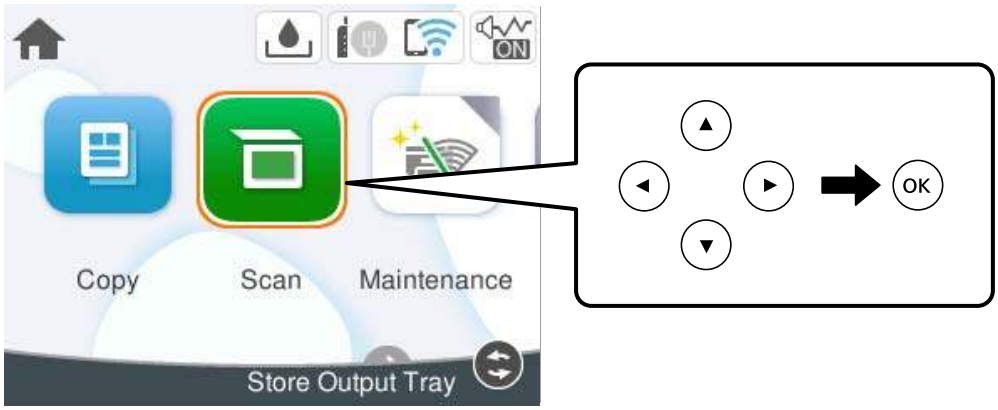

4. Select **Cloud**.

5. Select ⊕ on the top of the screen, and then select a destination.

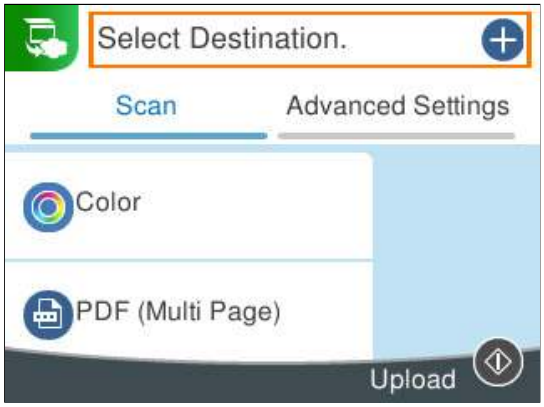

6. Set items on **Scan** tab, such as the save format.

   "Cloud Storage Scan Setting Items" on page 72

7. Select **Advanced Settings** tab, and then check settings, and change them if necessary.

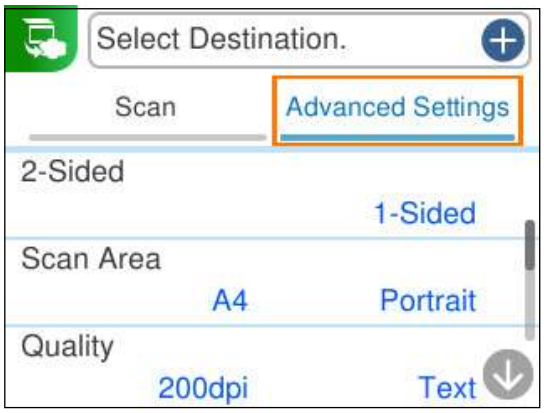

8. Select **Scan** tab again, and then press the ⟐ button.

Note:
The color, size, and border of the scanned image will not be exactly the same as the original.

Cloud Storage Scan Setting Items

B&W/Color

Select whether to scan in monochrome or in color.

File Format:

Select the format in which to save the scanned image.

When you want to save as PDF, select whether to save all originals as one file (multi-page) or save each original separately (single page).

Advanced Menu Options for Scanning to the Cloud

Note:
The items may not be available depending on other settings you made.

Scan Area:

Select the scan area. To crop the white space around the text or image when scanning, select **Auto Cropping**. To scan at the maximum area of the scanner glass, select **Max Area**.

❏ Orientation (Original):

Select the orientation of the original.

(Quality)

❏ Original Type:

Select the type of your original.

❏ Resolution:

Select the scanning resolution.

Original Type:

Select the type of your original.

Density:

Select the contrast of the scanned image.

Remove Shadow:

Remove the shadows of the original that appear in the scanned image.

❏ Surround:

Remove the shadows at the edge of the original.

❏ Center:

Remove the shadows of the binding margin of the booklet.

Remove Punch Holes:

Remove the punch holes that appear in the scanned image. You can specify the area to erase the punch holes by entering a value in the box on the right.

❏ Erasing Position:

Select the position to remove the punch holes.

❏ Orientation (Original):

Select the orientation of the original.

Clear All Settings

Resets the scan settings to their defaults.

Scanning Originals Using WSD

You can save the scanned image to a computer connected to the printer, using WSD feature.

Note:

❏ *This feature is only available for computers running Windows 7 or later.*

❏ *If you are using Windows 7, you need to setup your computer in advance using this feature.*

1. Place the originals.

   "Placing Originals" on page 30

2. Select **Scan** on the control panel.

   To select an item, use the ▲▼◀▶ buttons, and then press the OK button.

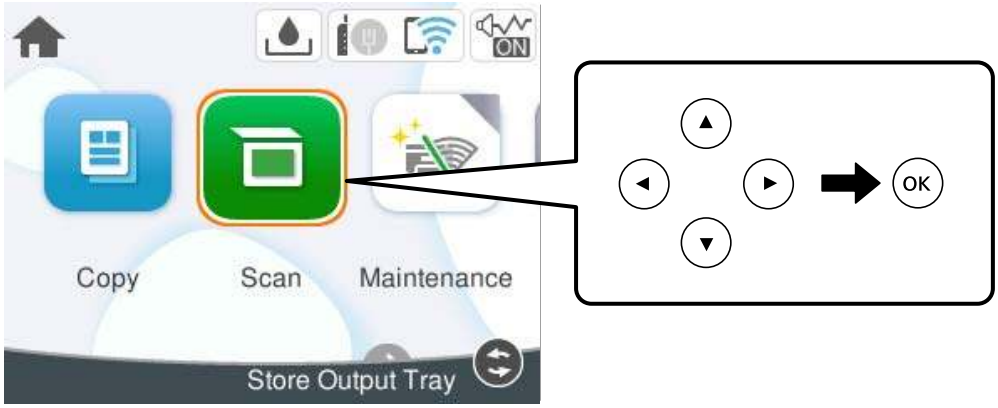

3. Select **WSD**.

4. Select a computer.

5. Press the ⊡ button.

Note:

The color, size, and border of the scanned image will not be exactly the same as the original.

Scanning Originals to a Mobile Device

Note:
Before scanning, install Epson Smart Panel on your mobile device.

1. Place the originals.

   "Placing Originals" on page 30

2. Start Epson Smart Panel on your mobile device.

3. Select scan menu on the home screen.

4. Follow the on-screen instructions to scan and save the images.

Advanced Scanning

Scanning Multiple Photos at the Same Time

Using Epson ScanSmart, you can scan multiple photos at the same time and save each image individually.

Note:
Windows Server operating systems are not supported.

1. Place the photos on the scanner glass. Place them 4.5 mm (0.2 in.) away from the horizontal and vertical edges of the scanner glass, and place them at least 20 mm (0.8 in.) away from each other.

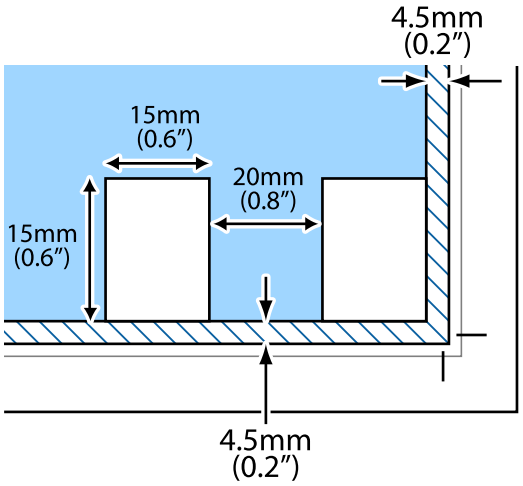

   Note:
   The photos should be larger than 15×15 mm (0.6×0.6 in.).

2. Start Epson ScanSmart.

   ❏ Windows 11

   Click the start button, and then select **All apps** > **Epson Software** > **Epson ScanSmart**.

   ❏ Windows 10

   Click the start button, and then select **Epson Software** > **Epson ScanSmart**.

- ❏ Windows 8.1/Windows 8
  Enter the application name in the search charm, and then select the displayed icon.
- ❏ Windows 7
  Click the start button, and then select **All Programs** > **Epson Software** > **Epson ScanSmart**.
- ❏ Mac OS
  Select **Go** > **Applications** > **Epson Software** > **Epson ScanSmart**.

3. When the Epson ScanSmart screen is displayed, follow the on-screen instructions to scan.

Scanned photos are saved as individual images.

Maintaining the Printer

Checking the Ink Level. 77

Cleaning the Paper Path for Paper Feeding Problems. 77

Improving Print, Copy, and Scan Quality. 79

Cleaning the Printer. 94

Cleaning Spilled ink. 94

Checking the Ink Level

To confirm the actual ink remaining, visually check the ink levels in all of the printer's tanks.

Important:

Prolonged use of the printer when the ink level is below the lower line could damage the printer.

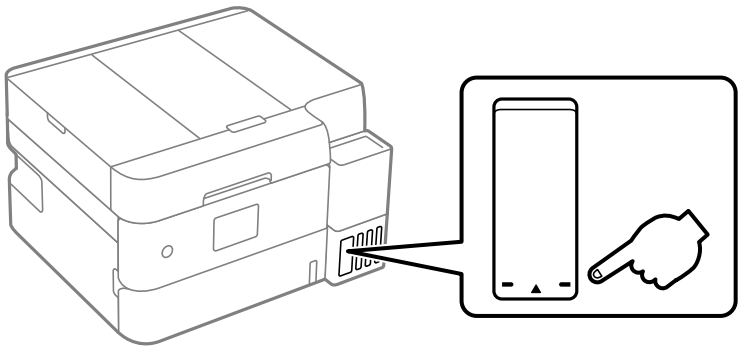

Note:

You can also check the approximate ink levels from the status monitor on the printer driver.

❑ *Windows*

*Click **EPSON Status Monitor 3** on the **Maintenance** tab.*

*If **EPSON Status Monitor 3** is disabled, click **Extended Settings** on the **Maintenance** tab, and then select **Enable EPSON Status Monitor 3**.*

❑ *Mac OS*

*Apple menu > **System Preferences** > **Printers & Scanners** (or **Print & Scan**, **Print & Fax**) > Epson(XXXX) > **Options & Supplies** > **Utility** > **Open Printer Utility** > **EPSON Status Monitor***

Related Information

➡ "It is Time to Refill the Ink" on page 164

➡ "It is Time to Replace the Maintenance Box" on page 170

Cleaning the Paper Path for Paper Feeding Problems

When paper is not fed from paper cassette correctly, clean the roller inside.

1. Turn off the printer by pressing the ⏻ button.
2. Unplug the power cord, and then disconnect the power cord.
3. Close the document cover if it is open.

4. Make sure that the ink tank cap is securely closed.

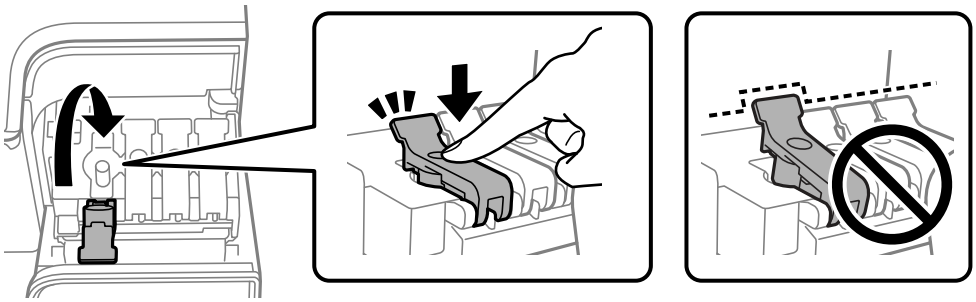

> ***Important:***
> *If ink tank cap is not securely closed, ink may leak.*

5. Slide out the paper cassette, and then remove the paper.

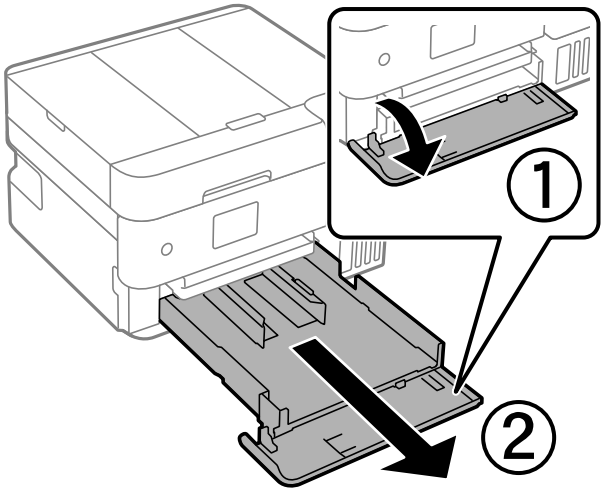

6. Stand the printer on its side with the printer's ink tank at the bottom.

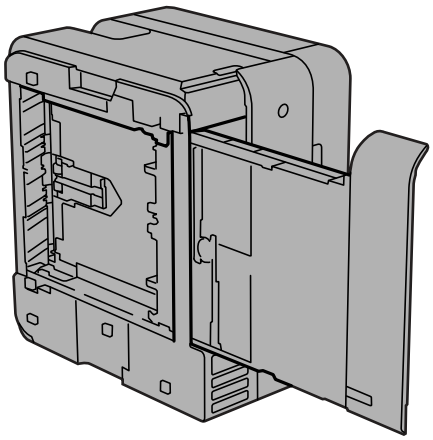

> ***Caution:***
> *Be careful not to trap your hand or fingers when standing the printer. Otherwise you may be injured.*

> ***Important:***
> *Do not leave the printer standing for a long time.*

7. Dampen a soft cloth with water, wring it out thoroughly, and then wipe the roller while rotating it with the cloth.

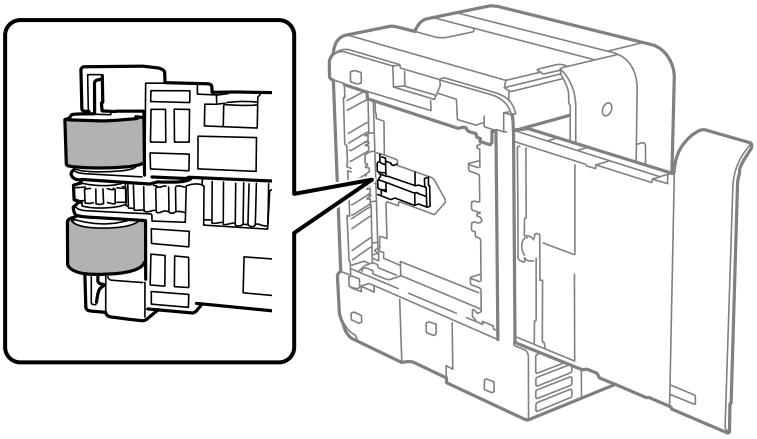

8. Return the printer to its normal position, and then insert the paper cassette.

9. Connect the power cord.

Improving Print, Copy, and Scan Quality

Adjusting the Print Quality

If you notice blank pages being ejected, misaligned vertical lines, blurred images, or horizontal banding, try **Print Quality Adjustment**.

> ***Important:***
> *Head cleaning may be necessary after performing **Print Quality Adjustment**. Check the following items when performing head cleaning.*
> - *Head cleaning consumes ink and should not be performed more than necessary.*
> - *When ink is low, you may not be able to clean the print head.*
> - *Do not turn off the printer during head cleaning. If the head cleaning is incomplete, you may not be able to print.*

1. Select **Maintenance** on the printer's control panel.

2. Select **Print Quality Adjustment**.

3. Follow the on-screen instructions to print the adjustment pattern and scan it.

> ***Caution:***
> *Close the document cover before scanning.*

Adjustments are performed automatically.

Note:

- *If scanning fails, check the paper set on the scanner glass and select **Start Scanning**. If the paper is folded or not properly aligned with the corner mark, it cannot be scan.*
- *Even if a blank sheet is ejected, follow the on-screen instructions to scan. If you scan a blank sheet of paper, scanning will fail. If this occurs, select **Cancel** and follow the on-screen instructions.*
- *If the problem does not improve even after performing **Print Quality Adjustment**, go to **Maintenance** to perform all available print head adjustments (nozzle check, cleaning, Alignment adjustment). See Related Information for more details.*

Related Information

➡ "Checking and Cleaning the Print Head" on page 80

➡ "Aligning the Print Head" on page 84

Checking and Cleaning the Print Head

If the nozzles are clogged, the printouts become faint, there is visible banding, or unexpected colors appear. If the nozzles are severely clogged, a blank sheet will be printed. When print quality has declined, first use the nozzle check feature to check if the nozzles are clogged. If the nozzles are clogged, clean the print head.

Important:

- *Do not open the scanner unit or turn off the printer during head cleaning. If the head cleaning is incomplete, you may not be able to print.*
- *Head cleaning consumes ink and should not be performed more than necessary.*
- *When ink is low, you may not be able to clean the print head.*
- *If print quality has not improved after running a nozzle check and Cleaning alternately 3 times or Power Cleaning once, wait for at least 12 hours without printing (we recommend turning off the printer), and then run a nozzle check. If print quality has still not improved, run Cleaning and a nozzle check again. If it has still not improved, run Power Ink Flushing.*
- *To prevent the print head from drying out, do not unplug the printer while the power is on.*

You can check and clean the print head by using the printer's control panel.

1. Select **Maintenance** on the printer's control panel.

   To select an item, use the ▲▼◀▶ buttons, and then press the OK button.

2. Select **Print Head Nozzle Check**.

3. Follow the on-screen instructions to load paper and print the nozzle check pattern.

4. Check the printed pattern to see if the print head nozzles are clogged.

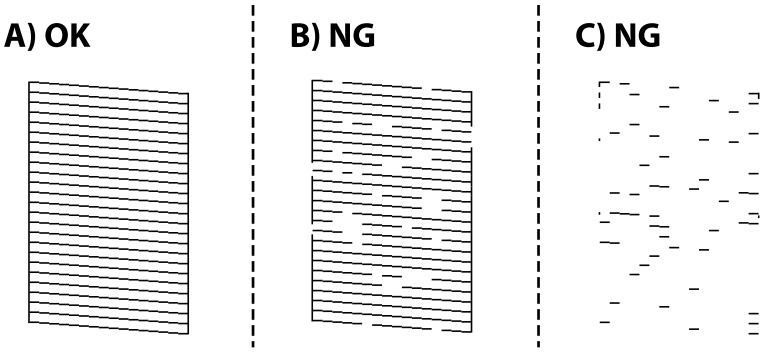

❑ A:

All lines are printed. Select ○. No further steps are needed.

❑ B or close to B

Some nozzles are clogged. Select ✕, and then select **Cleaning**, follow the on-screen instructions to clean the print head.

When cleaning is finished, the nozzle check pattern is printed automatically.

❑ C or close to C

If most lines are missing or not printed, this indicates most nozzles are clogged. Select ✕, and then select **Power Cleaning**, follow the on-screen instructions to run **Power Cleaning**.

When **Power Cleaning** is finished, the nozzle check pattern is printed automatically. For details, see "Related information" below.

5. Repeat cleaning and printing the pattern until all lines are printed completely.

Important:

If print quality has not improved after running a nozzle check and Cleaning alternately 3 times or Power Cleaning once, wait for at least 12 hours without printing (we recommend turning off the printer), and then run a nozzle check. If print quality has still not improved, run Cleaning and a nozzle check again. If it has still not improved, run Power Ink Flushing.

Note:
You can also check and clean the print head from the printer driver.

❑ *Windows*

*Click **Print Head Nozzle Check** on the **Maintenance** tab.*

❑ *Mac OS*

*Apple menu > **System Preferences** > **Printers & Scanners** (or **Print & Scan**, **Print & Fax**) > Epson(XXXX) > **Options & Supplies** > **Utility** > **Open Printer Utility** > **Print Head Nozzle Check***

Related Information

➡ "Running Power Cleaning" on page 82
➡ "Running Power Ink Flushing" on page 83

Running Power Cleaning

The **Power Cleaning** feature may improve print quality in the following cases.

❏ When most nozzles are clogged.

❏ When the printout comes out as a blank sheet.

Before running this feature, use the nozzle check feature to check if the nozzles are clogged, read the following instructions.

> ***Important:***
> *The Power Cleaning uses more ink than the Cleaning.*

1. Select **Maintenance** on the printer's control panel.

   To select an item, use the ▲ ▼ ◀ ▶ buttons, and then press the OK button.

2. Select **Print Head Cleaning**, and then select **Yes**, you can run the nozzle check. If you select **No**, you can select **Power Cleaning**.

3. Follow the on-screen instructions to run the Power Cleaning feature.

   Note:
   If you cannot run this feature, solve the problems that are displayed on the screen. Next, follow this procedure from step 1 to run this feature again.

4. After running this feature, run the nozzle check to make sure the nozzles are not clogged.

   For details on how to run the nozzle check, see the related information link below.

> ***Important:***
> *If print quality has not improved after running Power Cleaning, wait for at least 12 hours without printing (we recommend turning off the printer), and then run a nozzle check. If print quality has still not improved, run Cleaning and a nozzle check again. If it has still not improved, run Power Ink Flushing.*

Note:
*You can also run **Power Cleaning** from the printer driver.*

❏ *Windows*

Maintenance** tab > **Print Head Cleaning** > **Power Cleaning

❏ *Mac OS*

*Apple menu > **System Preferences** > **Printers & Scanners** (or **Print & Scan**, **Print & Fax**) > Epson(XXXX) > **Options & Supplies** > **Utility** > **Open Printer Utility** > **Print Head Cleaning** > **Power Cleaning***

Related Information

➡ "Checking and Cleaning the Print Head" on page 80

➡ "Running Power Ink Flushing" on page 83

Running Power Ink Flushing

The **Power Ink Flushing** utility allows you to replace all of the ink inside the ink tubes. In the following situations, you may need to use this feature to improve the print quality.

- ❏ You printed or performed head cleaning when the ink levels were too low to be seen in the ink tank windows.
- ❏ You performed the nozzle check and Cleaning3 times or running **Power Cleaning** once, and then waited for at least 12 hours without printing, and then run the nozzle check. If it has still not improved, run **Cleaning** and nozzle check again. Nevertheless, it has still not improved yet.

Before running this feature, read the following instructions.

> ***Important:***
>
> *Make sure that there is enough ink in the ink tanks.*
>
> *Visually check all ink tanks are at least a third full. Low ink levels during Power Ink Flushing could damage the product.*

> ***Important:***
>
> *Maintenance box replacement may be required.*
>
> *Ink will be deposited to the maintenance box. If it becomes full, you must prepare and install a replacement maintenance box to continue printing.*

Note:
When the ink levels or the free space in the maintenance box are insufficient for Power Ink Flushing, you cannot run this feature. Even in this case, the levels and the free space for printing may remain.

1. Select **Maintenance** on the printer's control panel.

   To select an item, use the ▲▼◀▶ buttons, and then press the OK button.

2. Select **Power Ink Flushing**.

3. Follow the on-screen instructions to run the Power Ink Flushing feature.

   Note:
   If you cannot run this feature, solve the problems that are displayed on the screen. Next, follow this procedure from step 1 to run this feature again.

4. After running this feature, run the nozzle check to make sure the nozzles are not clogged.

   For details on how to run the nozzle check, see the related information link below.

> ***Important:***
>
> *If print quality has not improved after running Power Ink Flushing, contact Epson support.*

Note:
*You can also run **Power Ink Flushing** from the printer driver.*

❏ *Windows*

*Click **Power Ink Flushing** on the **Maintenance** tab*

❏ *Mac OS*

*Apple menu > **System Preferences** > **Printers & Scanners** (or **Print & Scan**, **Print & Fax**) > Epson(XXXX) > **Options & Supplies** > **Utility** > **Open Printer Utility** > **Power Ink Flushing***

Related Information

➡ "Running Power Cleaning" on page 82

Preventing nozzle clogging

Always use the power button when turning the printer on and off.

Check that the power light is off before you disconnect the power cord.

The ink itself can dry out if it is not covered. Just like placing a cap on a fountain pen or an oil pen to prevent it from drying, make sure the print head is capped properly to prevent the ink from drying.

When the power cord is unplugged or a power outage occurs while the printer is in operation, the print head may not be capped properly. If the print head is left as it is, it will dry out causing nozzles (ink outlets) to clog.

In these cases, turn the printer on and off again as soon as possible to cap the print head.

Aligning the Print Head

If you notice a misalignment of vertical lines or blurred images, align the print head.

1. Select **Maintenance** on the printer's control panel.

   To select an item, use the ▲ ▼ ◀ ▶ buttons, and then press the OK button.

2. Select **Print Head Alignment**.

3. Select one of the alignment menus.

   ❏ Vertical lines look misaligned or the printouts look blurry : Select **Vertical Alignment**.

   ❏ Horizontal banding occurs at regular intervals: Select **Horizontal Alignment**.

4. Follow the on-screen instructions.

Cleaning the Paper Path for Ink Smears

When the printouts are smeared or scuffed, clean the roller inside.

1. Select **Maintenance** on the printer's control panel.

   To select an item, use the ▲ ▼ ◀ ▶ buttons, and then press the OK button.

2. Select **Paper Guide Cleaning**.

3. Follow the on-screen instructions to load paper and clean the paper path.

4. Repeat this procedure until the paper is not smeared with ink.

5. When the problem cannot be cleared after cleaning the paper path, the part inside the printer that is shown in the illustration is smeared. Turn off the printer, and then wipe off the ink using a cotton swab.

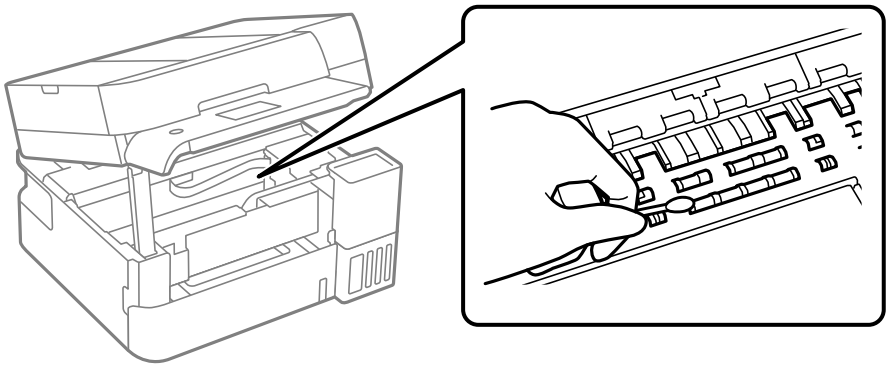

Important:

- ❏ *Do not use tissue paper to clean the inside of the printer. The print head nozzles may be clogged with lint.*
- ❏ *Do not touch the parts shown in the following illustration. Doing so may cause a malfunction.*

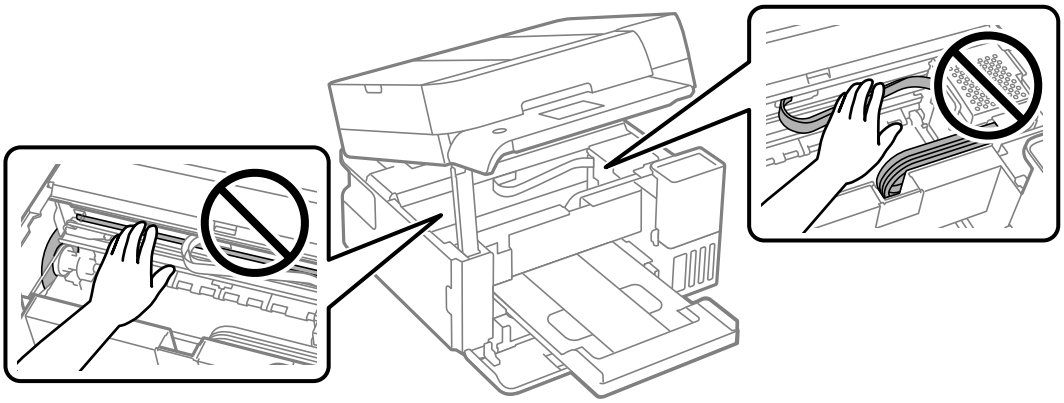

Cleaning the Scanner Glass

When the copies or scanned images are smeared, clean the scanner glass.

Caution:

Be careful not to trap your hand or fingers when opening or closing the document cover. Otherwise you may be injured.

Important:

Never use alcohol or thinner to clean the printer. These chemicals can damage the printer.

1. Open the document cover.

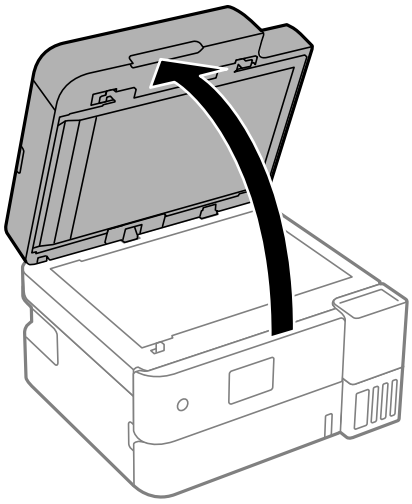

2. Use a soft, dry, clean cloth to clean the scanner glass.

> ***Important:***
> - *If the glass surface is stained with grease or some other hard-to-remove material, use a small amount of glass cleaner and a soft cloth to remove it. Wipe off all remaining liquid.*
> - *Do not press the glass surface too hard.*
> - *Be careful not to scratch or damage the surface of the glass. A damaged glass surface can decrease the scan quality.*

Cleaning the ADF

When the copied or scanned images from the ADF are smeared or the originals do not feed in the ADF correctly, clean the ADF.

> ***Important:***
> *Never use alcohol or thinner to clean the printer. These chemicals can damage the printer.*

1. Open the ADF cover.

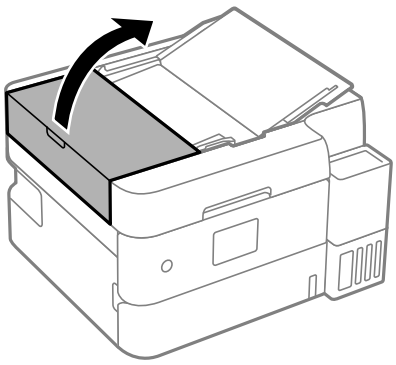

2. Use a soft, moist cloth to clean the roller and the interior of the ADF.

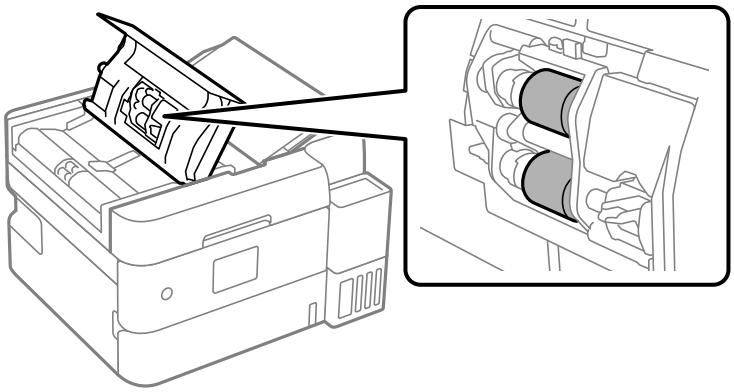

> ***Important:***
> *Using a dry cloth may damage the surface of the roller. Use the ADF after the roller has dried.*

3. Open the document cover.

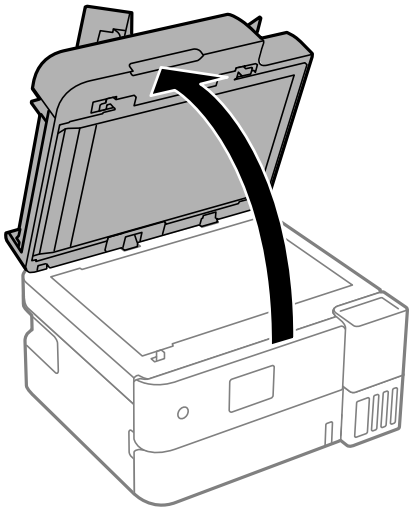

4. Release both tabs and remove the document mat.

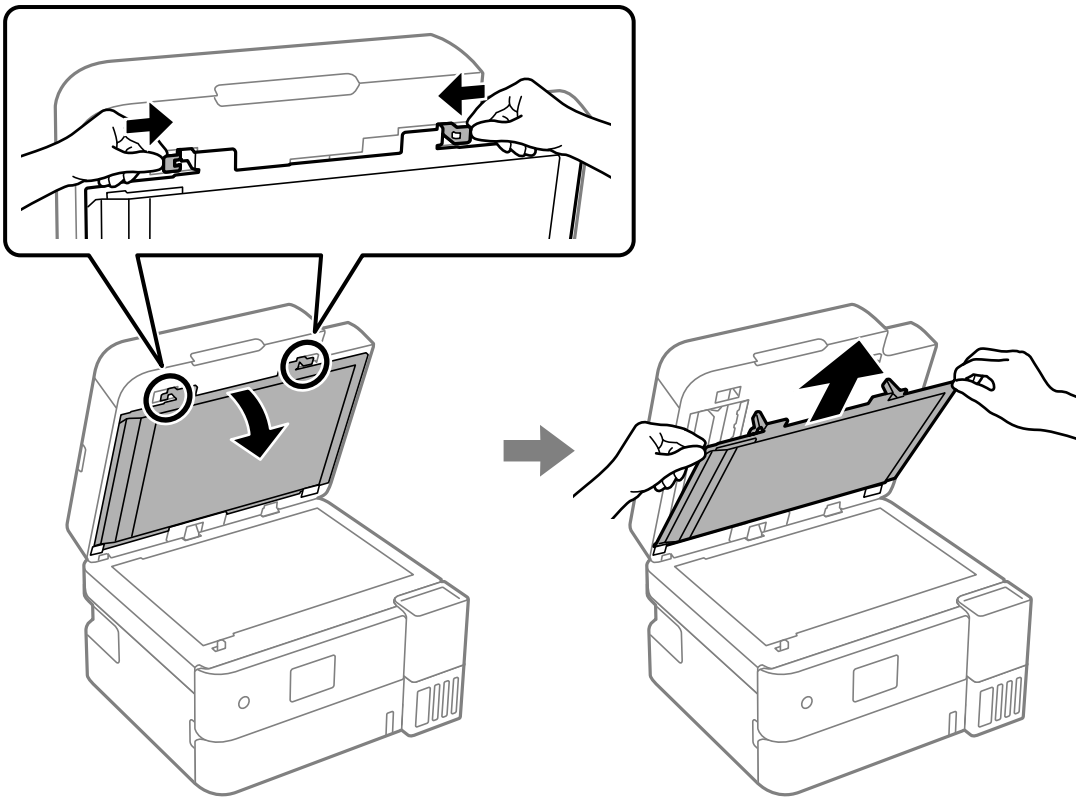

5. Clean the part that is shown in the illustration.

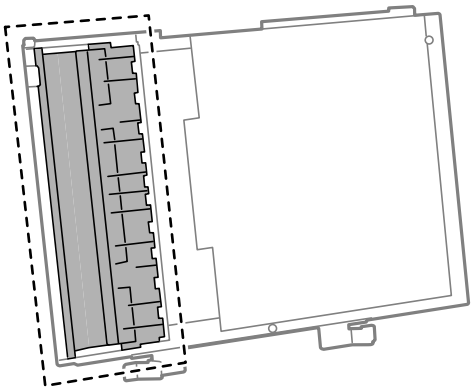

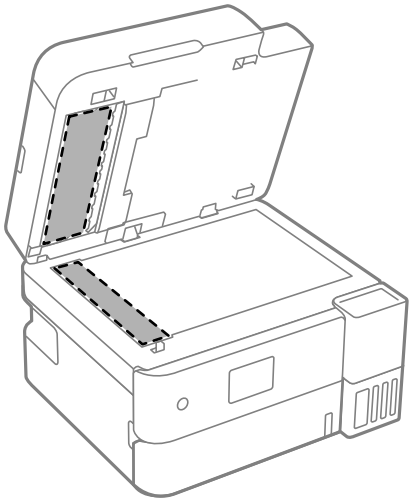

Important:

- *If the glass surface is stained with grease or some other hard-to-remove material, use a small amount of glass cleaner and a soft cloth to remove it. Wipe off all remaining liquid.*
- *Do not press the glass surface too hard.*
- *Be careful not to scratch or damage the surface of the glass. A damaged glass surface can decrease the scan quality.*

6. Reattach the document mat.

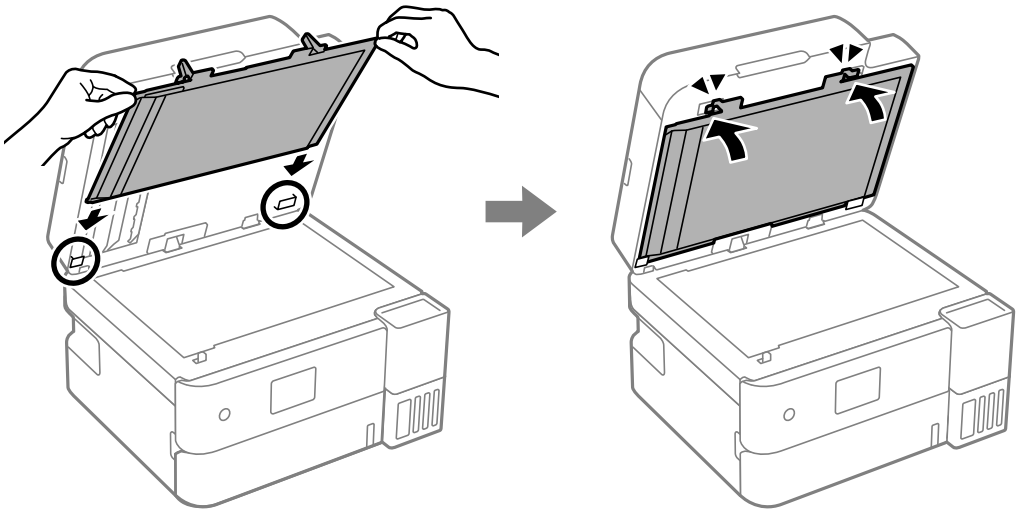

7. Close the document cover.

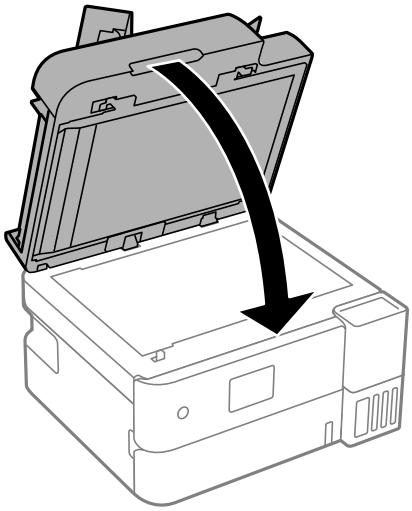

8. Close the ADF cover it clicks.

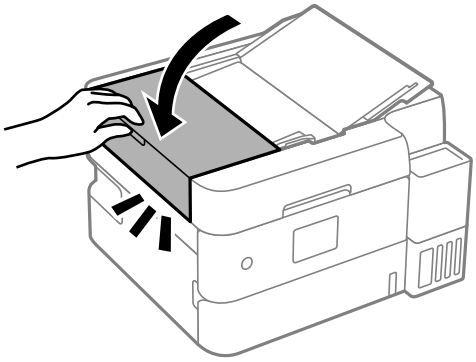

Cleaning the Translucent Film

When the printout is not improved after aligning the print head or cleaning the paper path, the translucent film inside the printer may be smeared.

Items required:

❏ Cotton swabs (several)

❏ Water with a few drops of detergent (2 to 3 drops of detergent in 1/4 cup of tap water)

❏ Light for checking smears

> ***Important:***
> *Do not use cleaning liquid other than water with a few drops of detergent.*

1. Turn off the printer by pressing the ⏻ button.
2. Close the document cover if it is open.
3. Raise the control panel.

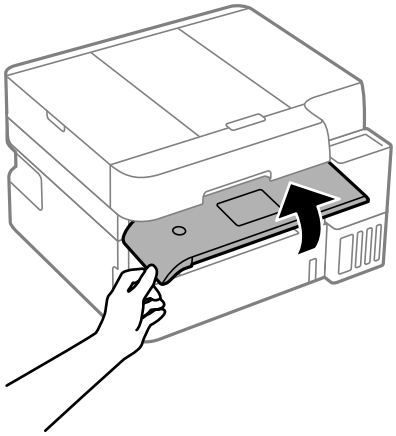

4. Open the scanner unit until it clicks.

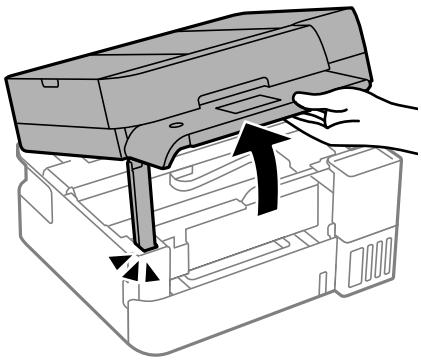

5. Check if the translucent film is smeared. Smears are easier to see if you use a light.

   If there are smears (such as finger marks or grease) on the translucent film (A), go to the next step.

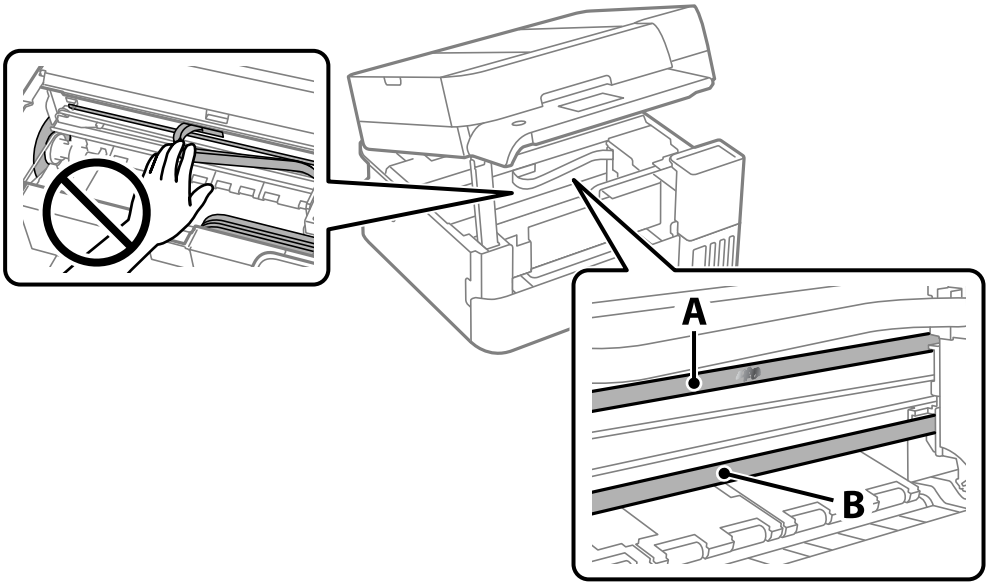

A: Translucent film

B: Rail

> ***Important:***
>
> *Be careful not to touch the rail (B). Otherwise, you may not be able to print. Do not wipe off the grease on the rail, because this is necessary for operations.*

6. Moisten a cotton swab with the water with a few drops of detergent so that it is not dripping water, and then wipe the smeared part.

   Be careful not to touch the ink that has adhered inside the printer.

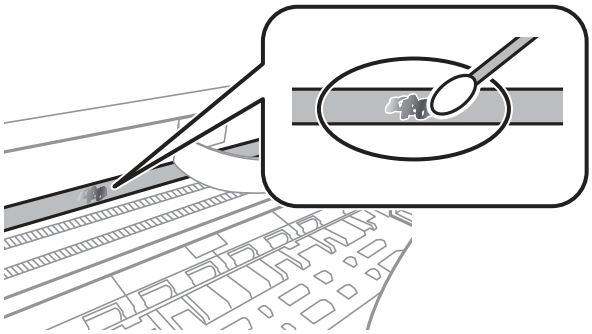

> ***Important:***
>
> *Wipe off the smear gently. If you press the cotton swab too hard to the film, the springs of the film may be dislocated and the printer may be damaged.*

7. Use a new dry cotton swab to wipe the film.

> ***Important:***
> *Do not leave any fibers on the film.*

Note:
To prevent the smear from spreading, frequently replace the cotton swab with a new one.

8. Repeat steps 5 and 6 until the film is not smeared.

9. Visually check that the film is not smeared.

10. Close the scanner unit.

    For safety, the scanner unit is closed in two steps.

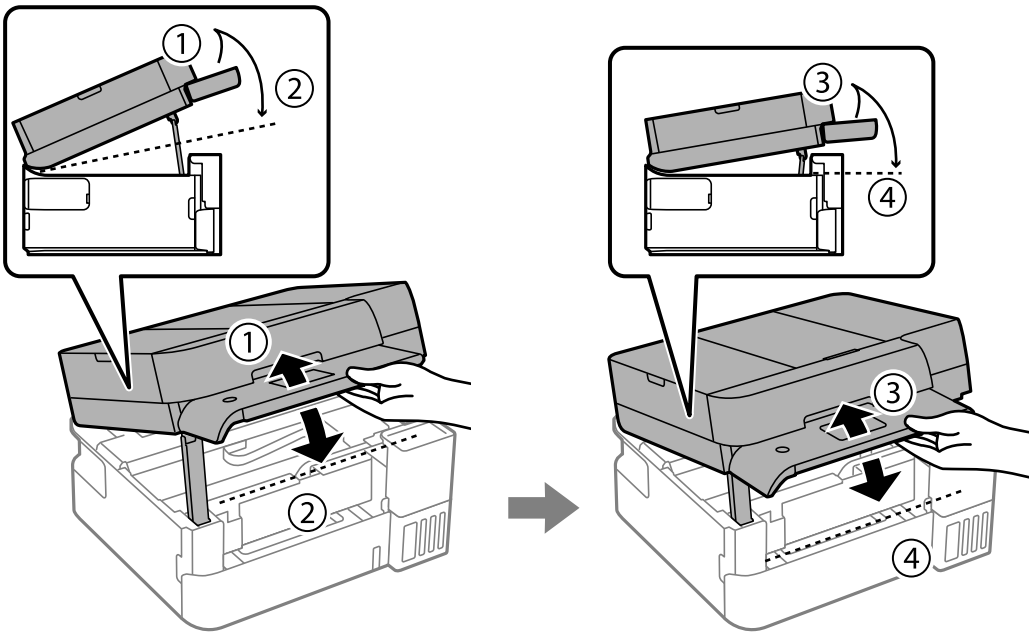

Note:
The scanner unit must be closed completely before it can be opened again.

Cleaning the Printer

If the components and the case are dirty or dusty, turn off the printer and clean them using a soft, clean cloth that has been dampened with water. If you cannot remove the dirt, try adding a small amount of mild detergent to the damp cloth.

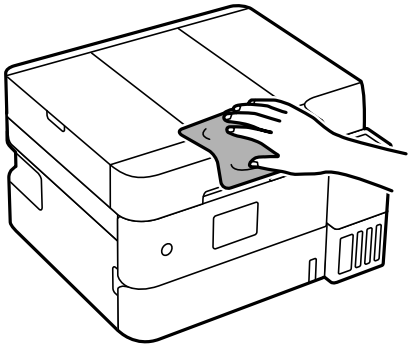

Important:

- ❏ *Be careful not to get water onto the printer mechanism or any electrical components. Otherwise, the printer could be damaged.*
- ❏ *Never use alcohol or paint thinner to clean the components and the case. These chemicals can damage them.*
- ❏ *Do not touch the parts shown in the following illustration. Doing so may cause a malfunction.*

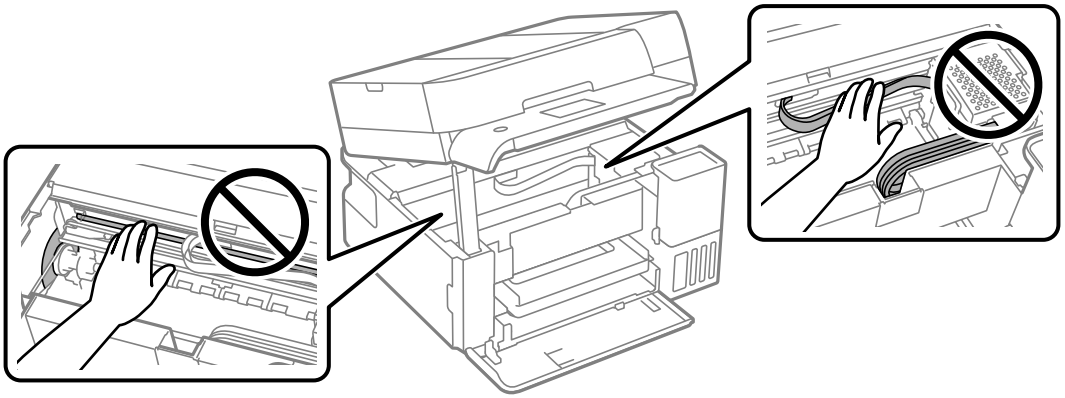

Cleaning Spilled ink

If ink has been spilled, follow these procedures to clean it up.

- ❏ If there is ink residue on the printer, in the area around the tank, wipe it off using a napless, clean cloth or cotton swab.
- ❏ If ink spills on the desk or floor, wipe it off immediately. If the ink dries, it will be difficult to remove. To prevent the spill from spreading, blot the ink with a dry cloth, and then wipe it with a moist cloth.
- ❏ If ink gets on your hands, wash them with water and soap.

In These Situations

When Replacing a Computer. 96

Saving Power. 96

Disabling your Wi-Fi Connection. 96

Checking the Total Number of Pages Fed Through the Printer. 97

Installing the Applications Separately. 98

Re-Setting the Network Connection. 100

Connecting a Device and Printer Directly (Wi-Fi Direct). 111

Adding or Changing the Printer's Connection. 115

Transporting and Storing the Printer. 118

When Replacing a Computer

You need to install the printer driver and other software on the new computer.

Access the following website, and then enter the product name. Go to **Setup**, and then start setting up. Follow the on-screen instructions.

https://epson.sn

Saving Power

The printer enters sleep mode or turns off automatically if no operations are performed for a set period. You can adjust the time before power management is applied. Any increase will affect the product's energy efficiency. Please consider the environment before making any change.

1. Select **Settings** on the home screen.

   To select an item, use the ▲ ▼ ◀ ▶ buttons, and then press the OK button.

2. Select **General Settings** > **Basic Settings**.

3. Do one of the following.

   Note:
   *Your product may have the **Power Off Settings** or **Power Off Timer** feature depending on the location of purchase.*

   ❏ Select **Sleep Timer** or **Power Off Settings** > **Power Off If Inactive** or **Power Off If Disconnected**, and then make settings.

   ❏ Select **Sleep Timer** or **Power Off Timer**, and then make settings.

Related Information

➡ "Application for Printing from a Computer (Windows Printer Driver)" on page 184

Disabling your Wi-Fi Connection

If you used to use Wi-Fi (wireless LAN) but no longer need to do so due to a change in connection mode and so on, you can disable your Wi-Fi connection.

By removing unnecessary Wi-Fi signals, you can also reduce the load on your standby power.

1. Select on the printer's home screen.

   To select an item, use the ▲▼◀▶ buttons, and then press the OK button.

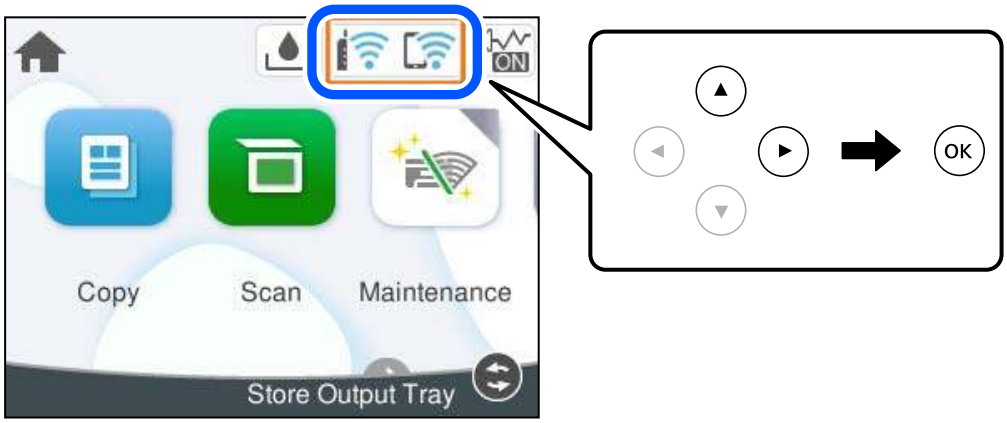

2. Select **Wi-Fi**.

3. Select **Change Access Point**.

4. Select **Others**.

5. Select **Disable Wi-Fi**.

   Follow the on-screen instructions.

Checking the Total Number of Pages Fed Through the Printer

You can check the total number of pages fed through the printer. The information is printed together with the nozzle check pattern.

1. Select **Maintenance** on the printer's control panel.

   To select an item, use the ▲▼◀▶ buttons, and then press the OK button.

2. Select **Print Head Nozzle Check**.

3. Follow the on-screen instructions to load paper and print the nozzle check pattern.

Note:
You can also check the total number of pages fed from the printer driver.

❏ *Windows*

*Click **Printer and Option Information** on the **Maintenance** tab.*

❏ *Mac OS*

*Apple menu > **System Preferences** (or **System Settings** > **Printers & Scanners** (or **Print & Scan**, **Print & Fax**) > Epson(XXXX) > **Options & Supplies** > **Utility** > **Open Printer Utility** > **Printer and Option Information***

Installing the Applications Separately

Connect your computer to the network and install the latest version of applications from the website. Log in to your computer as an administrator. Enter the administrator password if the computer prompts you.

Note:

- *When reinstalling an application, you need to uninstall it first.*
- *You can download the latest applications from the Epson website.*

  http://www.epson.com
- *If you use Windows Server operating systems, you cannot use Epson Software Updater. Download the latest applications from the Epson website.*

1. Make sure the printer and the computer are available for communication, and the printer is connected to the Internet.

2. Start Epson Software Updater.

   The screenshot is an example on Windows.

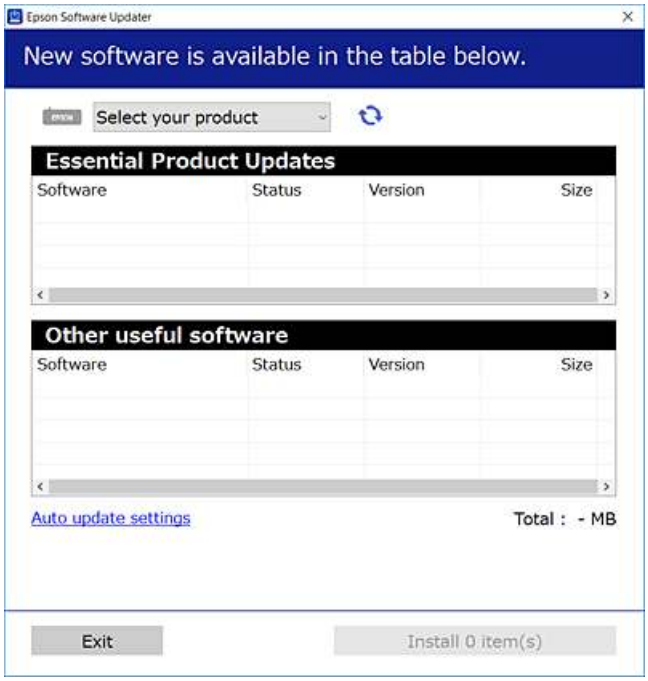

3. For Windows, select your printer, and then click to check for the latest available applications.

4. Select the items you want to install or update, and then click the install button.

> ***Important:***
>
> *Do not turn off or unplug the printer until the update is complete. Doing so may result in malfunction of the printer.*

Related Information

➡ "Application for Updating Software and Firmware (Epson Software Updater)" on page 187

Checking if a genuine Epson printer driver is installed - Windows

You can check if a genuine Epson printer driver is installed on your computer by using one of the following methods.

❏ Windows 11

Click on the start button, select **Settings** > **Bluetooth & devices** > **Printers & scanners**, and then click **Print server properties** under **Related settings**.

❏ Windows 10/Windows 8.1/Windows 8/Windows 7/Windows Server 2022/Windows Server 2019/Windows Server 2016/Windows Server 2012 R2/Windows Server 2012/Windows Server 2008 R2

Select **Control Panel** > **View devices and printers** (**Printers**, **Printers and Faxes**) in **Hardware and Sound**, click the printer icon, and then click **Print server properties** at the top of the window.

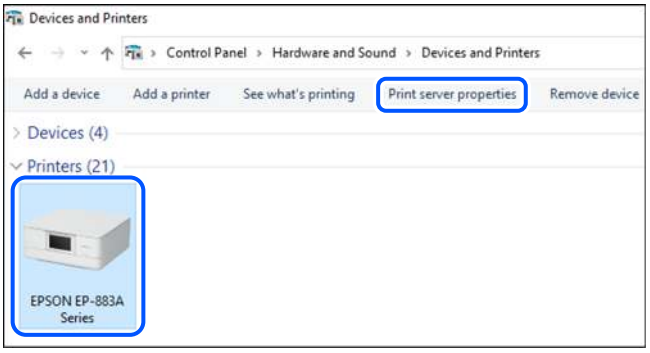

❏ Windows Server 2008

Right-click on the **Printers** folder, and then click **Run as administrator** > **Server Properties**.

Click the **Drivers** tab. If your printer name is displayed in the list, a genuine Epson printer driver is installed on your computer.

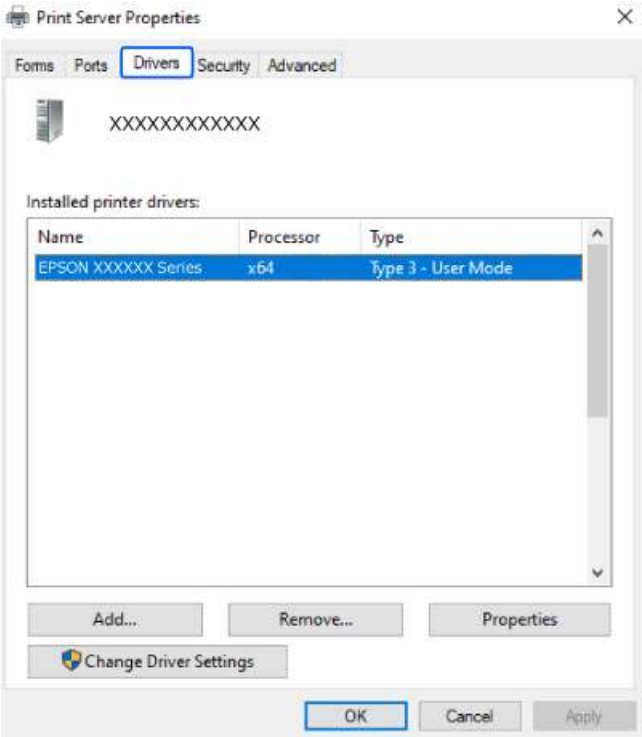

Related Information

➡ "Installing the Applications Separately" on page 98

Checking if a genuine Epson printer driver is installed - Mac OS

You can check if a genuine Epson printer driver is installed on your computer by using one of the following methods.

Select **System Preferences** (or **System Settings**) from the Apple menu > **Printers & Scanners** (or **Print & Scan**, **Print & Fax**), and then select the printer. Click **Options & Supplies**, and if the **Options** tab and **Utility** tab are displayed on the window, a genuine Epson printer driver is installed on your computer.

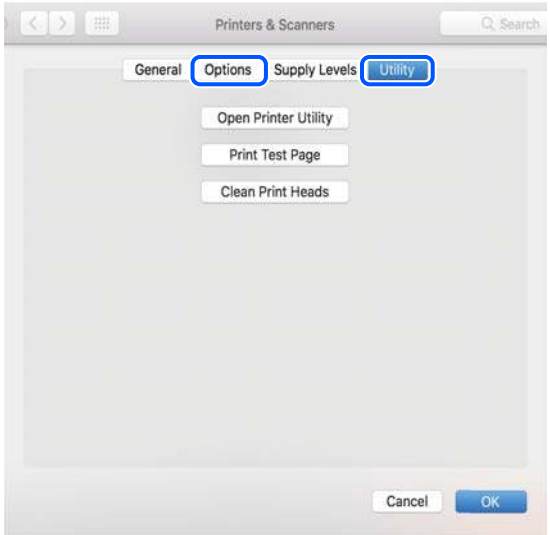

Related Information

➡ "Installing the Applications Separately" on page 98

Re-Setting the Network Connection

The printer's network settings need to be adjusted in the following cases.

- ❏ When using a printer with a network connection
- ❏ Your network environment has changed
- ❏ You replaced the wireless router
- ❏ Changing the connection method to the computer (for example, switching from a USB connection to a Wi-Fi connection)

Making Settings for Connecting to the Computer

You can run the installer using one of the following methods.

Setting up from the website

Access the following website, and then enter the product name. Go to **Setup**, and then start setting up.

https://epson.sn

You can also watch the procedure in the Web Video Manuals. Access the following website.

https://support.epson.net/publist/vlink.php?code=NPD7415

Setting up using the software disc

If your printer came with a software disc and you are using a Windows computer with a disc drive, insert the disc into the computer, and then follow the on-screen instructions.

Making Settings for Connecting to the mobile device

You can use the printer via the wireless router from your mobile device when you connect the printer to the same network as the wireless router.

To set up a new connection, access the following website from the mobile device that you want to connect to the printer. Enter the product name, go to Setup, and then start the setup.

https://epson.sn

You can watch the procedure in the Web Video Manuals. Access the following website.

https://support.epson.net/publist/vlink.php?code=VC00006

Note:
If you have already set up the connection between your mobile device and the printer but need to reconfigure it, you can do so from an app such as Epson Smart Panel.

Related Information

➡ "Printing Using Epson Smart Panel" on page 48

Configuring Wi-Fi Settings from the Control Panel

If you are not using a computer or mobile device to set up the printer connection, you can do so on the control panel.

You can select network settings from the printer's control panel in several ways. Choose the connection method that matches the environment and conditions that you are using.

If you know the SSID and password for your wireless router, you can set them manually.

Related Information

➡ "Making Wi-Fi Settings by Entering the SSID and Password" on page 102
➡ "Making Wi-Fi Settings by Push Button Setup (WPS)" on page 103
➡ "Making Wi-Fi Settings by PIN Code Setup (WPS)" on page 104

Making Wi-Fi Settings by Entering the SSID and Password

You can set up a Wi-Fi network by entering the information necessary to connect to a wireless router from the printer's control panel. To set up using this method, you need the SSID and password for a wireless router.

Note:
If you are using a wireless router with its default settings, the SSID and password are on the label. If you do not know the SSID and password, see the documentation provided with the wireless router.

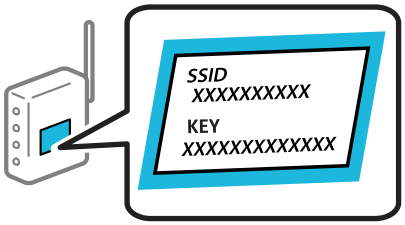

1. Select on the home screen.

   To select an item, use the ▲▼◀▶ buttons, and then press the OK button.

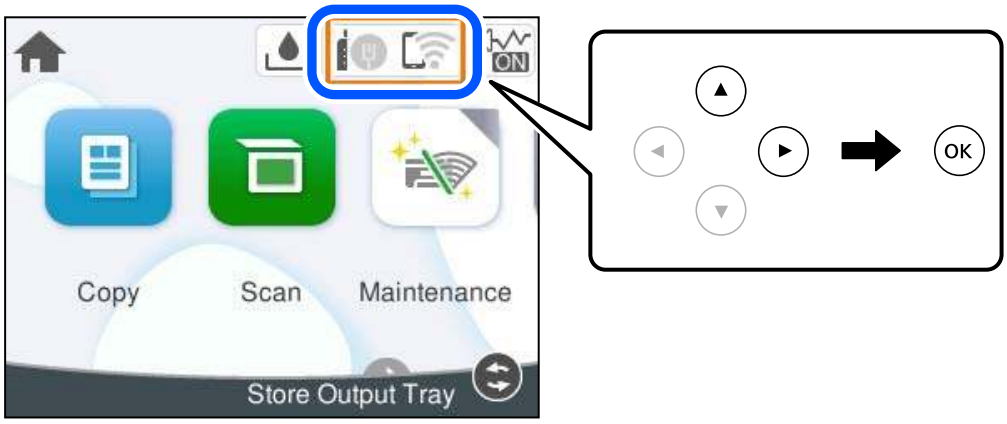

2. Select **Wi-Fi**.

3. Press the OK button to display the next screen.

   If the network connection is already set up, the connection details are displayed. Select **Change Access Point** to change the settings.

   If the printer has already been connected by Ethernet, select **Change to Wi-Fi connection.**, and then select **Yes** after checking the message.

4. Select **Wi-Fi Setup Wizard**.

5. Follow the on-screen instructions to select the SSID, enter the password for the wireless router, and start setup.

   If you want to check the network connection status for the printer after setup is complete, see the related information link below for details.

Note:

- *If you do not know the SSID, check if it is written on the label of the wireless router. If you are using the wireless router with its default settings, use the SSID written on the label. If you cannot find any information, see the documentation provided with the wireless router.*
- *The password is case-sensitive.*
- *If you do not know the password, check if the information is written on the label of the wireless router. On the label, the password may be written "Network Key", "Wireless Password", and so on. If you are using the wireless router with its default settings, use the password written on the label.*
- *If the SSID you want to connect to is not displayed, make Wi-Fi settings using software or apps on your computer or mobile device. For more information, enter https://epson.sn in your browser to open the website, enter your product name, and go to* ***Setup****.*

Related Information

➡ "Checking the Printer's Network Connection Status (Network Connection Report)" on page 105
➡ "Making Settings for Connecting to the Computer" on page 100
➡ "Making Settings for Connecting to the mobile device" on page 101

Making Wi-Fi Settings by Push Button Setup (WPS)

You can automatically set up a Wi-Fi network by pressing a button on the wireless router. If the following conditions are met, you can set up by using this method.

- The wireless router is compatible with WPS (Wi-Fi Protected Setup).
- The current Wi-Fi connection was established by pressing a button on the wireless router.

Note:
If you cannot find the button or you are setting up using the software, see the documentation provided with the wireless router.

1. Select on the home screen.

   To select an item, use the ▲▼◀▶ buttons, and then press the OK button.

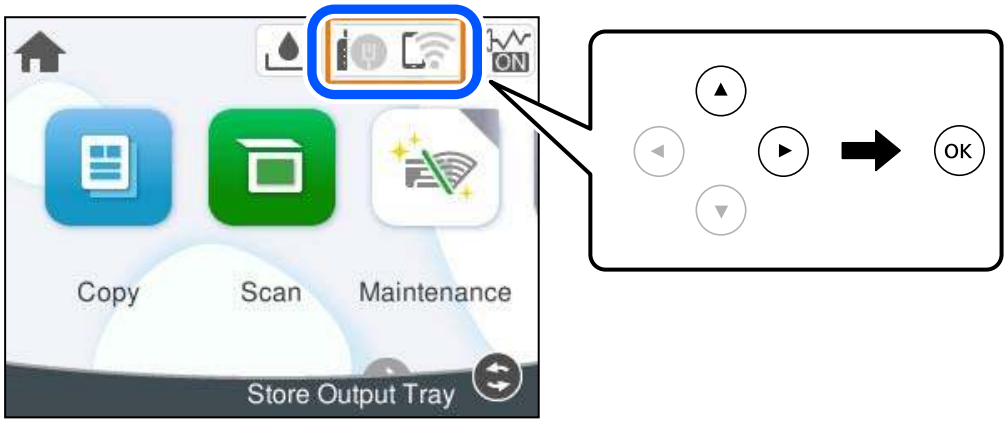

2. Select **Wi-Fi**.

3. Press the OK button.

   If the network connection is already set up, the connection details are displayed. Select **Change Access Point** to change the settings.

   If the printer has already been connected by Ethernet, select **Change to Wi-Fi connection.**, and then select **Yes** after checking the message.

4. Select **Push Button Setup (WPS)**.

5. Follow the on-screen instructions.

   If you want to check the network connection status for the printer after setup is complete, see the related information link below for details.

   Note:
   If connection fails, restart the wireless router, move it closer to the printer, and try again. If it still does not work, print a network connection report and check the solution.

Related Information

➡ "Checking the Printer's Network Connection Status (Network Connection Report)" on page 105

Making Wi-Fi Settings by PIN Code Setup (WPS)

You can automatically connect to a wireless router by using a PIN code. You can use this method to set up if a wireless router is capable of WPS (Wi-Fi Protected Setup). Use a computer to enter a PIN code into the wireless router.

1. Select on the home screen.

   To select an item, use the ▲▼◀▶ buttons, and then press the OK button.

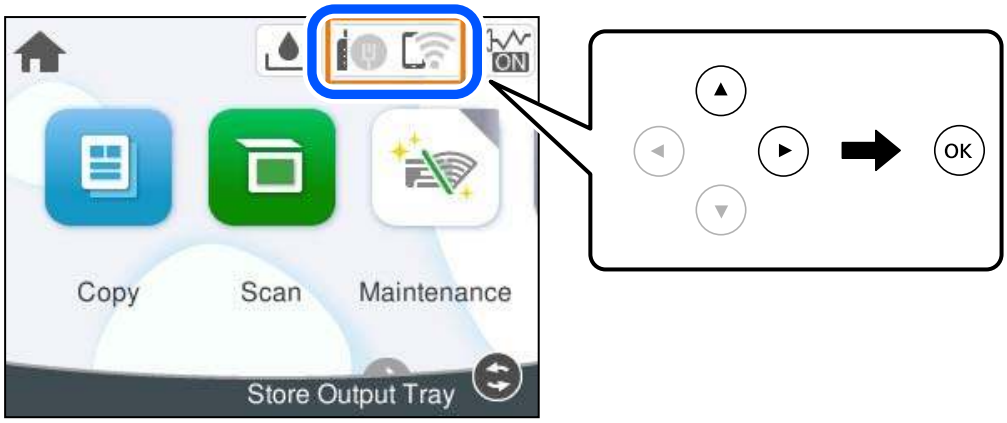

2. Select **Wi-Fi**.

3. Press the OK button.

   If the network connection is already set up, the connection details are displayed. Select **Change Access Point** to change the settings.

   If the printer has already been connected by Ethernet, select **Change to Wi-Fi connection.**, and then select **Yes** after checking the message.

4. Select **Others** > **PIN Code Setup (WPS)**.

5. Follow the on-screen instructions.

   If you want to check the network connection status for the printer after setup is complete, see the related information link below for details.

   Note:
   See the documentation provided with your wireless router for details on entering a PIN code.

Related Information

➡ "Checking the Printer's Network Connection Status (Network Connection Report)" on page 105

Checking the Printer's Network Connection Status (Network Connection Report)

You can print a network connection report to check the status between the printer and the wireless router.

1. Select **Settings** on the home screen.

   To select an item, use the ▲ ▼ ◀ ▶ buttons, and then press the OK button.

2. Select **General Settings** > **Network Settings** > **Connection Check**.

   The connection check starts.

3. Follow the instructions on the printer's screen to print the network connection report.

   If an error has occurred, check the network connection report, and then follow the printed solutions.

Messages and Solutions on the Network Connection Report

Check the messages and error codes on the network connection report, and then follow the solutions.

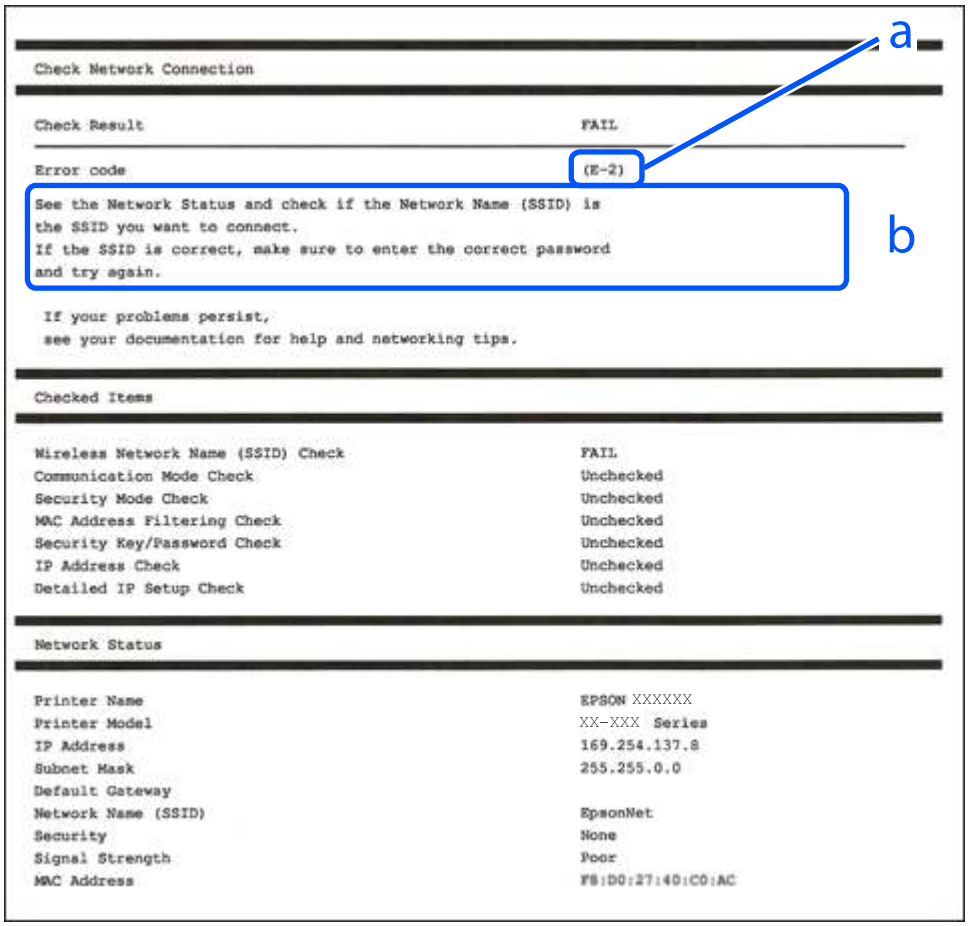

a. Error code

b. Network Environment Message

Related Information

- ➡ "E-1" on page 107
- ➡ "E-2, E-3, E-7" on page 107
- ➡ "E-5" on page 108
- ➡ "E-6" on page 108
- ➡ "E-8" on page 108
- ➡ "E-9" on page 109
- ➡ "E-10" on page 109
- ➡ "E-11" on page 110
- ➡ "E-12" on page 110
- ➡ "E-13" on page 111
- ➡ "Network Environment Messages" on page 111

E-1

Solutions:

- ❏ Make sure the Ethernet cable is securely connected to your printer and to your hub or other network device.
- ❏ Make sure your hub or other network device is turned on.
- ❏ If you want to set up a Wi-Fi connection, reselect the Wi-Fi settings because they are currently disabled.

Related Information

➡ "Configuring Wi-Fi Settings from the Control Panel" on page 101

E-2, E-3, E-7

Solutions:

- ❏ Make sure your wireless router is turned on.
- ❏ Confirm that your computer or device is connected correctly to the wireless router.
- ❏ Turn off the wireless router. Wait for about 10 seconds, and then turn it on.
- ❏ Place the printer closer to your wireless router and remove any obstacles between them.
- ❏ If you have entered the SSID manually, check if it is correct. Check the SSID from the **Network Status** part on the network connection report.
- ❏ If an wireless router has multiple SSIDs, select the SSID that is displayed. When the SSID is using a non-compliant frequency, the printer does not display them.
- ❏ If you are using push button setup to establish a network connection, make sure your wireless router supports WPS. You cannot use push button setup if your wireless router does not support WPS.
- ❏ Makes sure you know your SSID and password before connecting to the wireless router. If you are using a wireless router with its default settings, the SSID and password are located on a label on the wireless router. If you do not know your SSID and password, contact the person who set up the wireless router, or see the documentation provided with the wireless router.
- ❏ If you are connecting to an SSID generated from a tethering mobile device, check for the SSID and password in the documentation provided with the mobile device.
- ❏ If your Wi-Fi connection suddenly disconnects, check for the conditions below. If any of these conditions are applicable, reset your network settings by downloading and running the software from the following website.

  https://epson.sn > **Setup**

  - ❏ Another mobile device was added to the network using push button setup.
  - ❏ The Wi-Fi network was set up using any method other than push button setup.
  - ❏ When replacing the wireless router.

Related Information

➡ "Re-Setting the Network Connection" on page 100
➡ "Configuring Wi-Fi Settings from the Control Panel" on page 101

E-5

Solutions:

- ❏ Make sure the wireless router's security type is set to one of the options below. If it is set to anything else, change the security type on the wireless router.
  - ❏ WEP-64 bit (40 bit)
  - ❏ WEP-128 bit (104 bit)
  - ❏ WPA PSK (TKIP/AES)*
  - ❏ WPA2 PSK (TKIP/AES)*
  - ❏ WPA3-SAE (AES)

* WPA PSK is also known as WPA Personal. WPA2 PSK is also known as WPA2 Personal.

- ❏ Turn off the wireless router. Wait for about 10 seconds, and then turn it on.
- ❏ Reconfigure the printer's network settings.

E-6

Solutions:

- ❏ Check if MAC address filtering is disabled. If it is enabled, register the printer's MAC address so that it is not filtered. See the documentation provided with the wireless router for details. You can check the printer's MAC address from the **Network Status** part on the network connection report.
- ❏ If your wireless router is using shared authentication with WEP security, make sure the authentication key and index are correct.
- ❏ If the number of connectable devices on the wireless router is less than the number of network devices that you want to connect, make settings on the wireless router to increase the number of connectable devices. See the documentation provided with the wireless router to make settings.
- ❏ Turn off the wireless router. Wait for about 10 seconds, and then turn it on.
- ❏ Make network settings of the printer again.

Related Information

➡ "Making Settings for Connecting to the Computer" on page 100

E-8

Solutions:

- ❏ If the wireless router's DHCP is enabled, set the printer's TCP/IP settings to Auto.
- ❏ If the printer's Obtain IP Address setting is set to Manual, the IP address you manually set is invalid due to out of range (for example: 0.0.0.0). Set a valid IP address from the printer's control panel.
- ❏ Turn off the wireless router. Wait for about 10 seconds, and then turn it on.
- ❏ Make network settings of the printer again.

Related Information

➡ "Setting a Static IP Address for the Printer" on page 117

E-9

Solutions:

Check the following.

❏ Devices are turned on.

❏ You can access the Internet and other computers or network devices on the same network from the devices you want to connect to the printer.

If still does not connect your printer and network devices after confirming the above, try the following.

❏ Turn off the wireless router. Wait for about 10 seconds, and then turn it on.

❏ Make network settings on the computer that is on the same network as the printer using the installer. You can download it from the following website.

https://epson.sn > **Setup**

If the problem continues to occur, check the IP address of the printer listed in the Network Connection Report and contact your router manufacturer.

Related Information

➡ "Making Settings for Connecting to the Computer" on page 100

E-10

Solutions:

Check the following.

❏ Other devices on the network are turned on.

❏ Network addresses (IP address, subnet mask, and default gateway) are correct if you have set the printer's Obtain IP Address to Manual.

Reset the network address if they are incorrect. You can check the IP address, subnet mask, and default gateway from the **Network Status** part on the network connection report.

If DHCP is enabled, change the printer's Obtain IP Address setting to Auto. If you want to set the IP address manually, check the printer's IP address from the **Network Status** part on the network connection report, and then select Manual on the network settings screen. Set the subnet mask to [255.255.255.0].

If still does not connect your printer and network devices after confirming the above, try the following.

❏ Turn off the wireless router. Wait for about 10 seconds, and then turn it on.

❏ Make network settings on the computer that is on the same network as the printer using the installer. You can run it from the following website.

https://epson.sn > **Setup**

Related Information

➡ "Setting a Static IP Address for the Printer" on page 117

E-11

Solutions:

Check the following.

❏ The default gateway address is correct if you set the printer's TCP/IP Setup setting to Manual.

❏ The device that is set as the default gateway is turned on.

Set the correct default gateway address. You can check the default gateway address from the **Network Status** part on the network connection report.

If still does not connect your printer and network devices after confirming the above, try the following.

❏ Turn off the wireless router. Wait for about 10 seconds, and then turn it on.

❏ Make network settings on the computer that is on the same network as the printer using the installer. You can run it from the following website.

https://epson.sn > **Setup**

Related Information

➡ "Setting a Static IP Address for the Printer" on page 117

E-12

Solutions:

Check the following.

❏ Other devices on the network are turned on.

❏ The network addresses (IP address, subnet mask, and default gateway) are correct if you are entering them manually.

❏ The network addresses for other devices (subnet mask and default gateway) are the same.

❏ The IP address does not conflict with other devices.

If still does not connect your printer and network devices after confirming the above, try the following.

❏ Turn off the wireless router. Wait for about 10 seconds, and then turn it on.

❏ Make network settings again using the installer. You can run it from the following website.

https://epson.sn > **Setup**

❏ You can register several passwords on a wireless router that uses WEP security type. If several passwords are registered, check if the first registered password is set on the printer.

Related Information

➡ "Setting a Static IP Address for the Printer" on page 117

E-13

Solutions:

Check the following.

- ❏ Network devices such as a wireless router, hub, and router are turned on.
- ❏ The TCP/IP Setup for network devices has not been set up manually. (If the printer's TCP/IP Setup is set automatically while the TCP/IP Setup for other network devices is performed manually, the printer's network may differ from the network for other devices.)

If it still does not work after checking the above, try the following.

- ❏ Turn off the wireless router. Wait for about 10 seconds, and then turn it on.
- ❏ Make network settings on the computer that is on the same network as the printer using the installer. You can run it from the following website.

  https://epson.sn > **Setup**
- ❏ You can register several passwords on a wireless router that uses the WEP security type. If several passwords are registered, check if the first registered password is set on the printer.

Related Information

➡ "Making Settings for Connecting to the Computer" on page 100
➡ "Setting a Static IP Address for the Printer" on page 117

Network Environment Messages

Message	Solution
The Wi-Fi environment needs to be improved. Turn the wireless router off and then turn it on. If the connection does not improve, see the documentation for the wireless router.	After moving the printer closer to the wireless router and removing any obstacles between them, turn off the wireless router. Wait for about 10 seconds, and then turn it on. If it still does not connect, see the documentation supplied with the wireless router.
*No more devices can be connected. Disconnect one of the connected devices if you want to add another one.	You have connected the maximum number of devices allowed via the printer's Wi-Fi Direct (Simple AP) connection. To add another computer or mobile device, disconnect one of the connected devices. You can confirm the number of devices that can be connected simultaneously and the number of connected devices by checking the network status sheet or the printer's control panel.
The same SSID as Wi-Fi Direct exists in the environment. Change the Wi-Fi Direct SSID if you cannot connect a mobile device to the printer.	On the printer's control panel, go to the Wi-Fi Direct Setup screen and select the menu to change the setting. You can change the part of the network name that after DIRECT-XX-. The network name must be 22 characters or less.

Connecting a Device and Printer Directly (Wi-Fi Direct)

Wi-Fi Direct (Simple AP) allows you to connect a device directly to the printer without a wireless router and print from the device.

About Wi-Fi Direct

Use this connection method when you are not using Wi-Fi at home or at the office, or when you want to connect the printer and the computer or mobile devices directly. In this mode, the printer acts as a wireless router and you can connect the devices to the printer without having to use a standard wireless router. However, devices directly connected to the printer cannot communicate with each other through the printer.

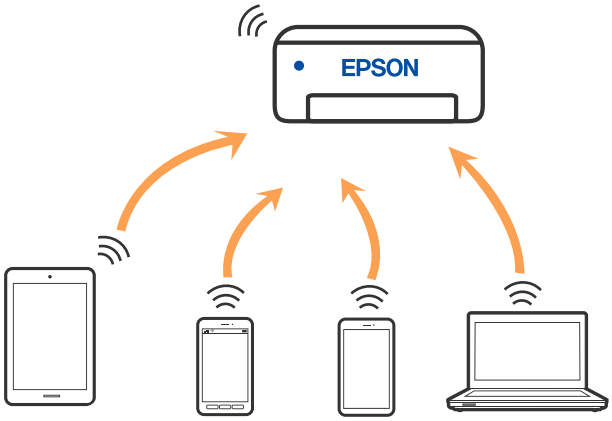

The printer can be connected by Wi-Fi or Ethernet, and Wi-Fi Direct (Simple AP) connection simultaneously. However, if you start a network connection in Wi-Fi Direct (Simple AP) connection when the printer is connected by Wi-Fi, the Wi-Fi is temporarily disconnected.

Connecting to Devices using Wi-Fi Direct

This method allows you to connect the printer directly to devices without a wireless router.

Note:
For iOS or Android users, it is convenient to set up from Epson Smart Panel.

You only need to make these settings for the printer and the device that you want to connect to once. Unless you disable Wi-Fi Direct or restore the network settings to their defaults, you do not need to make these settings again.

1. Select on the home screen.

   To select an item, use the ▲▼◀▶ buttons, and then press the OK button.

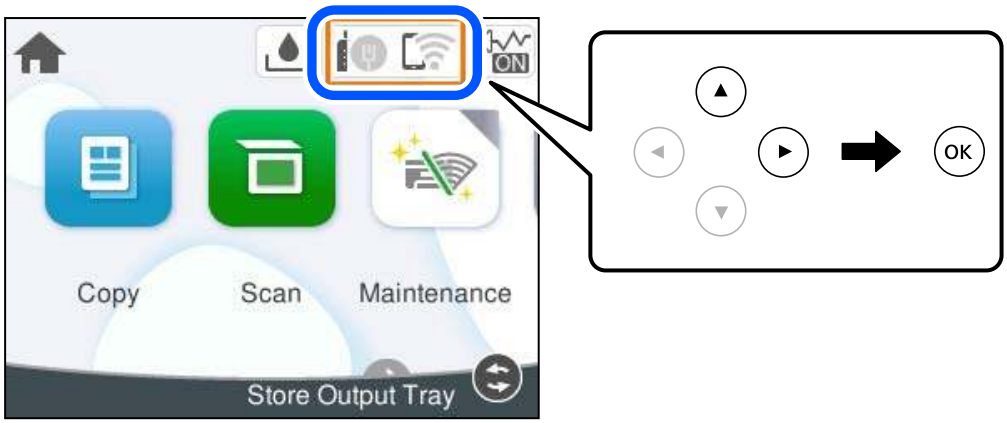

2. Select **Wi-Fi Direct**.

3. Press the OK button.

4. Scroll down the printer screen to display the SSID and password required to set up the connection. Select the SSID displayed on your device and enter the password.

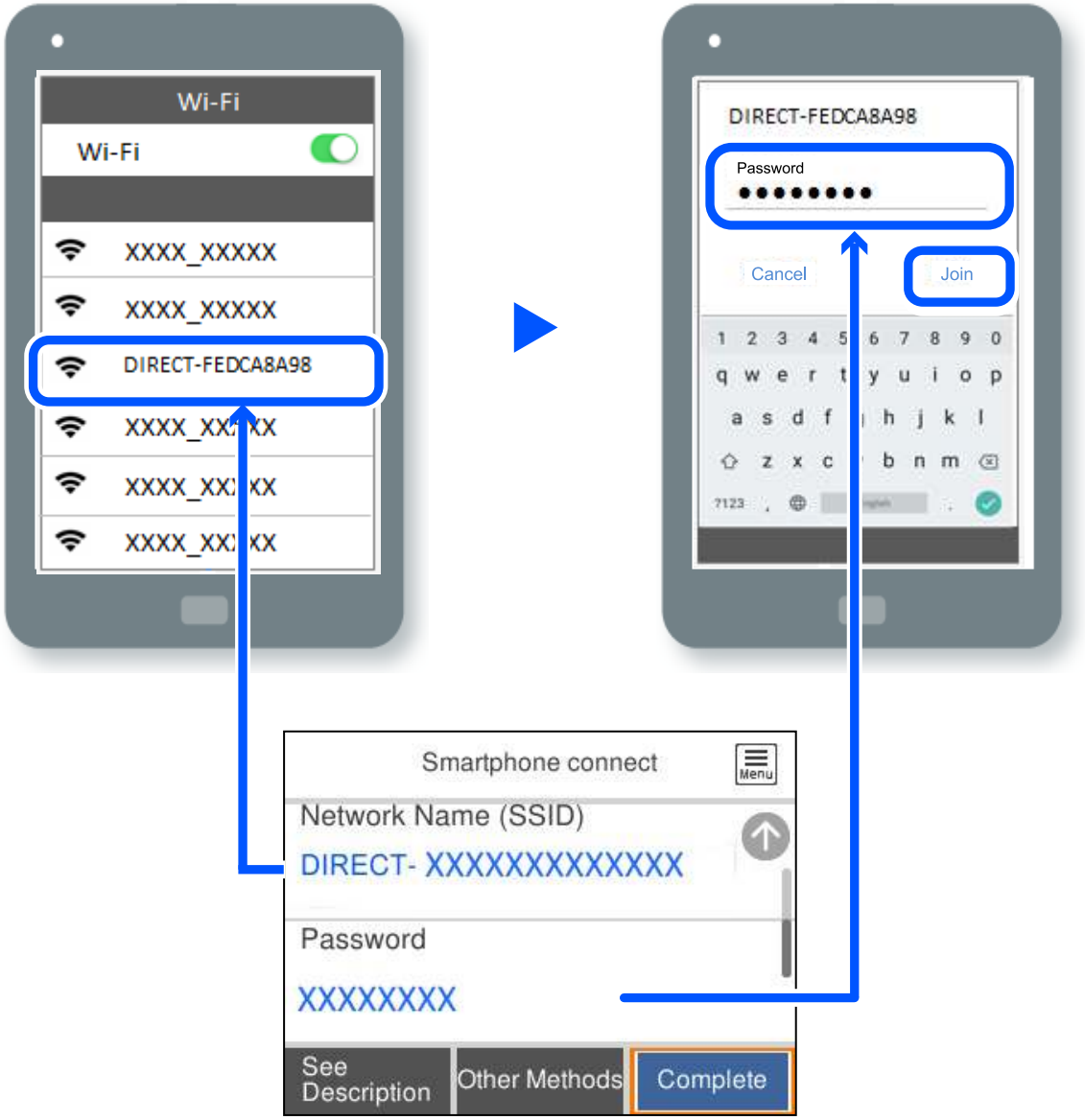

5. On the printing app screen for the device, select the printer that you want to connect to.

6. On the printer's control panel, select **Complete**.

For devices that have been connected to the printer before, select the network name (SSID) on the device's Wi-Fi screen to connect them again.

Note:
If you are using an iOS device, you can also connect by scanning the QR code with the standard iOS camera. See the link below https://epson.sn.

Disconnecting Wi-Fi Direct (Simple AP) Connection

Note:
When Wi-Fi Direct (Simple AP) connection disabled, all computers and mobile devices connected to the printer in Wi-Fi Direct (Simple AP) connection are disconnected. If you want to disconnect a specific device, disconnect from the device instead of the printer.

1. Select on the printer's home screen.

   To select an item, use the ▲▼◀▶ buttons, and then press the OK button.

2. Select **Wi-Fi Direct**.

   The Wi-Fi Direct information is displayed.

3. Select **Start Setup**.

4. Select .

5. Select **Disable Wi-Fi Direct**.

6. Follow the on-screen instructions.

Changing the Wi-Fi Direct (Simple AP) Settings Such as the SSID

When Wi-Fi Direct (simple AP) connection is enabled, you can change the settings from > **Wi-Fi Direct** > **Start Setup** > , and then the following menu items are displayed.

Change Network Name

Change the Wi-Fi Direct (simple AP) network name (SSID) used for connecting to the printer to your arbitrary name. You can set the network name (SSID) in ASCII characters that is displayed on the software keyboard on the control panel. You can enter up to 22 characters.

When changing the network name (SSID), all connected devices are disconnected. Use the new network name (SSID) if you want to re-connect the device.

Change Password

Change the Wi-Fi Direct (simple AP) password for connecting to the printer to your arbitrary value. You can set the password in ASCII characters that is displayed on the software keyboard on the control panel. You can enter 8 to 22 characters.

When changing the password, all connected devices are disconnected. Use the new password if you want to re-connect the device.

Change Frequency Range

Change the frequency range of Wi-Fi Direct used for connecting to the printer. You can select 2.4 GHz or 5 GHz.

When changing the frequency range, all connected devices are disconnected. Re-connect the device.

Note that you cannot re-connect from devices that do not support 5 GHz frequency range when changing to 5 GHz.

Disable Wi-Fi Direct

Disable Wi-Fi Direct (simple AP) settings of the printer. When disabling it, all devices connected to the printer in Wi-Fi Direct (Simple AP) connection are disconnected.

Restore Default Settings

Restore all Wi-Fi Direct (simple AP) settings to their defaults.

The Wi-Fi Direct (simple AP) connection information of the mobile devices saved to the printer is deleted.

Adding or Changing the Printer's Connection

To Set Up a Printer on Multiple Computers

Although several computers can be connected to the same wireless router, each computer may be assigned a different SSID.

If the SSIDs assigned by the wireless router are not handled as the same network, then each computer is effectively connected to a different network. When you start setting up the printer from computer A, the printer is added to the same network as computer A allowing computer A to print from it.

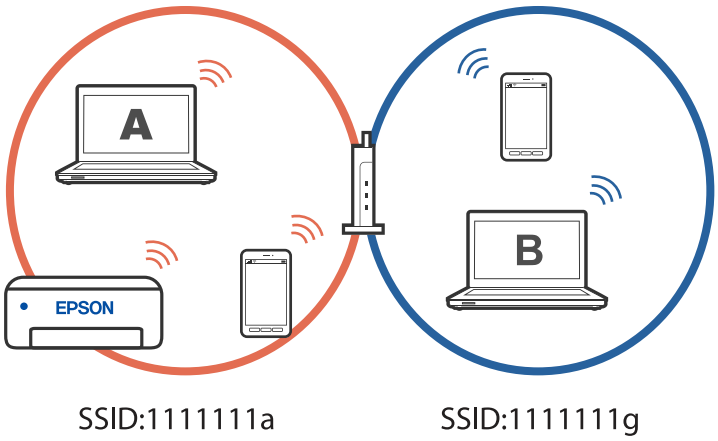

Furthermore, if you start setting up the printer from computer B in the configuration shown above, the printer is set up on computer B's network allowing computer B to print but not computer A.

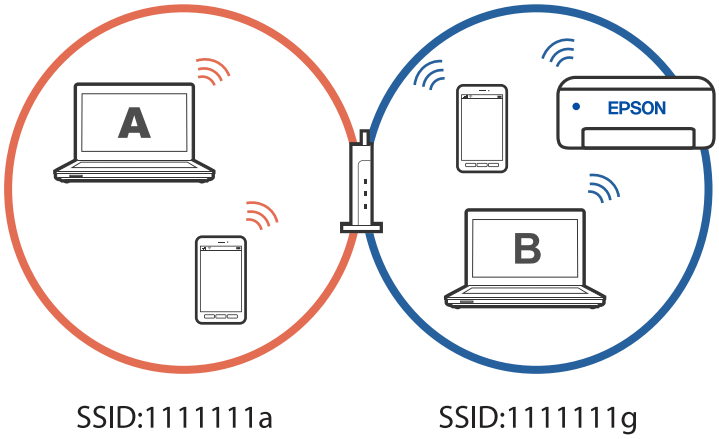

To prevent this from happening, when you want to connect the printer to a second computer, make sure the second computer is on the same network as the printer before you begin setup.

Changing the Connection from Wi-Fi to USB

Follow the steps below if the Wi-Fi you are using is unstable, or if you want to change to a more stable USB connection.

1. Connect the printer to a computer using a USB cable.

2. When you print, select the printer whose name does not end with "(Network)" or the printer name in parentheses.

   Example of Windows 11

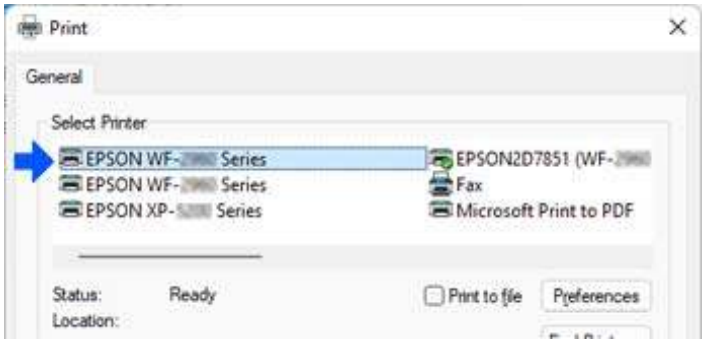

   Example of Windows 10

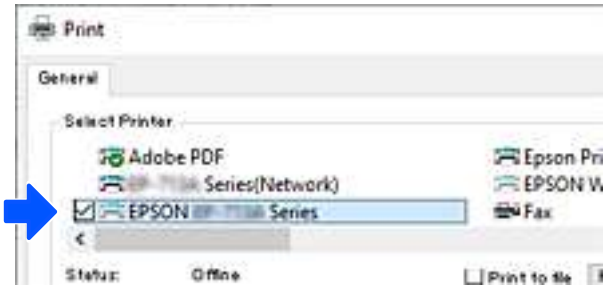

Changing the Connection from Wi-Fi to Wired LAN

If the Wi-Fi you are using is unstable, or if you want to change to a more stable wired LAN connection, follow these instructions.

1. Select **Settings** on the home screen.
2. Select **General Settings** > **Network Settings** > **Connection Settings** > **Ethernet**.
3. Follow the guide to connect the LAN cable.

Setting a Static IP Address for the Printer

This section describes how to make settings from the printer's control panel.

1. Select **Settings** on the printer's home screen.
2. Select **General Settings** > **Network Settings** > **Advanced** > **TCP/IP**.
3. Select **Obtain IP Address**, and then select **Manual**.
4. Enter the IP address.

   Focus moves to the forward segment or the back segment separated by a period if you select ◀ and ▶.

   Confirm the value reflected on the previous screen.
5. Set up the **Subnet Mask** and **Default Gateway**.

   Confirm the value reflected on the previous screen.

   > ***Important:***
   > *If the combination of the IP Address, Subnet Mask and Default Gateway is incorrect, you cannot proceed with the settings. Confirm that there is no error in the entry.*

6. Enter the IP address for the primary DNS server.

   Confirm the value reflected on the previous screen.

   Note:
   *When you select **Auto** for the IP address assignment settings, you can select the DNS server settings from **Manual** or **Auto**. If you cannot obtain the DNS server address automatically, select **Manual** and enter the DNS server address. Then, enter the secondary DNS server address directly. If you select **Auto**, go to step 8.*

7. Enter the IP address for the secondary DNS server.

   Confirm the value reflected on the previous screen.
8. Select **Start Setup**.

Related Information

➡ "Application for Configuring Printer Operations (Web Config)" on page 186

Transporting and Storing the Printer

When you need to store the printer or transport it when moving or for repairs, follow the steps below to pack the printer.

1. Turn off the printer by pressing the ⏻ button.
2. Make sure the power light turns off, and then unplug the power cord.

   > ***Important:***
   > *Unplug the power cord when the power light is off. Otherwise, the print head does not return to the home position causing the ink to dry, and printing may become impossible.*

3. Disconnect all cables such as the power cord and USB cable.
4. Remove all of the paper from the printer.
5. Make sure there are no originals on the printer.
6. Close the document cover if it is open.
7. Raise the control panel.

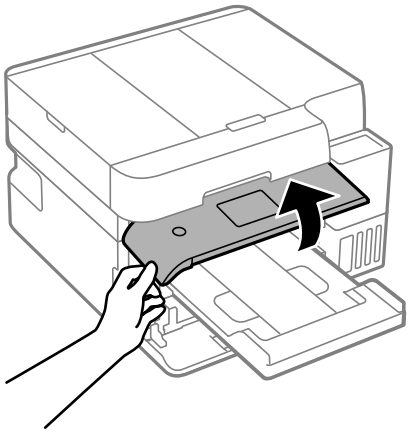

8. Open the scanner unit until it clicks.

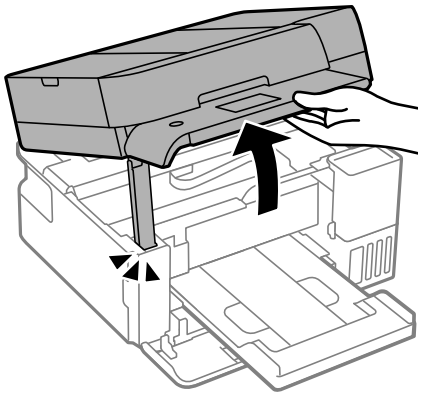

9. Secure the print head to the case with tape.

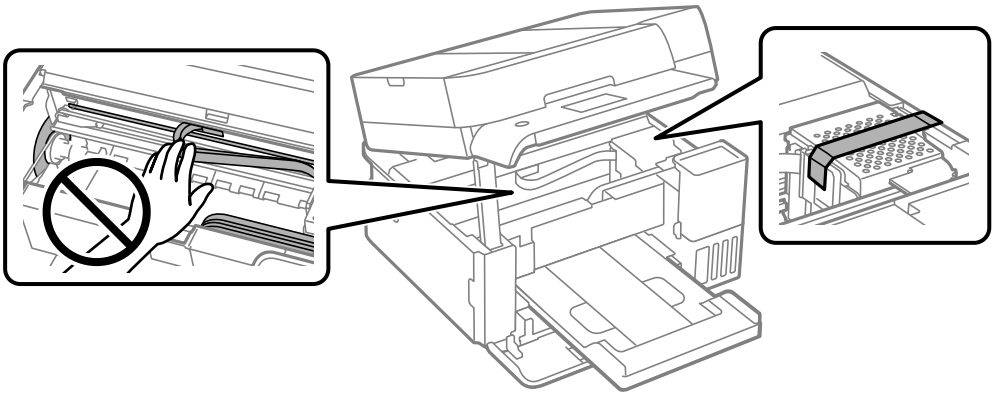

Note:
Be sure to apply the tape as shown below, without covering the holes, or you will not be able to close the scanner unit.

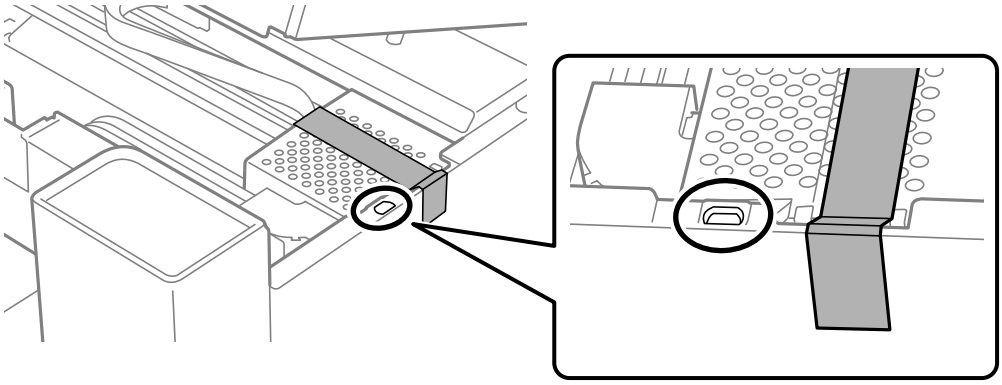

10. Close the scanner unit.

    For safety, the scanner unit is closed in two steps.

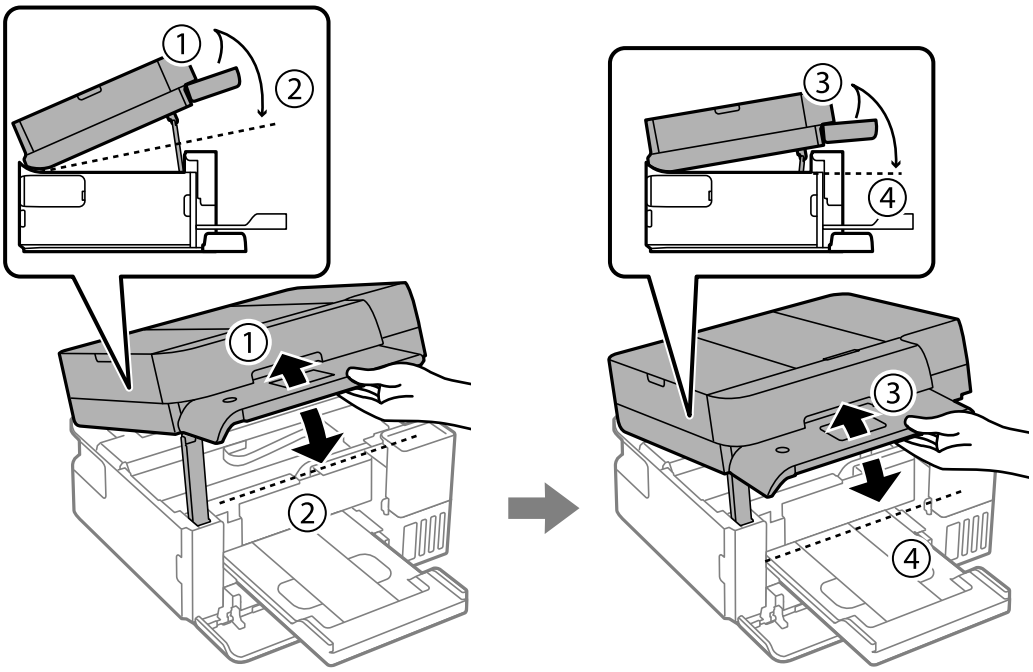

Note:
The scanner unit must be closed completely before it can be opened again.

11. Make sure to install the cap onto the ink tank securely.

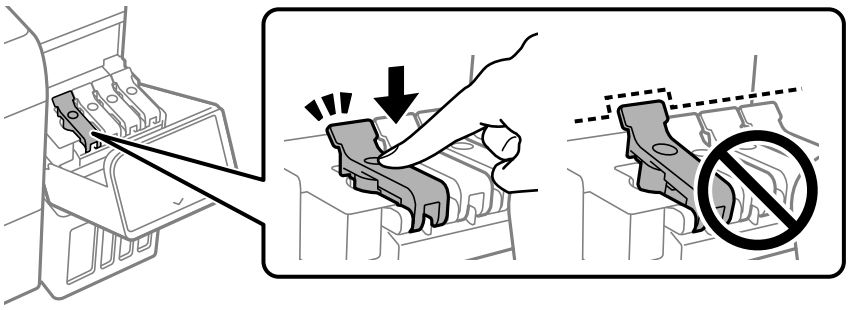

12. Close the ink tank cover securely.

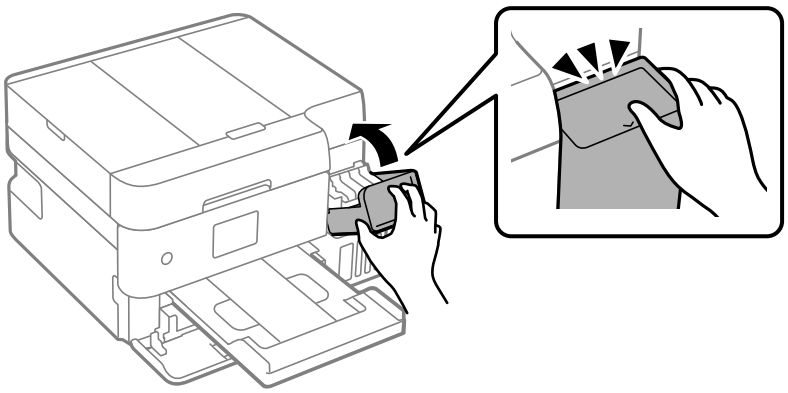

13. Prepare to pack the printer as shown below.

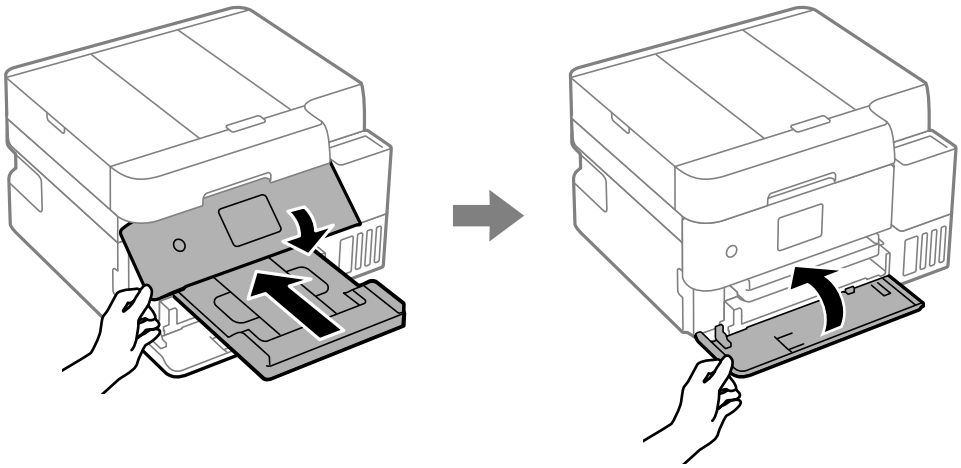

14. Place the printer in the plastic bag and fold it closed.

15. Pack the printer in its box using the protective materials.

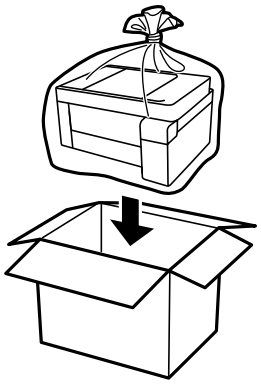

Important:

- *When storing or transporting the printer, place the printer in the plastic bag and fold it closed. Avoid tilting the printer, placing it vertically, or turning it upside down; otherwise ink may leak.*

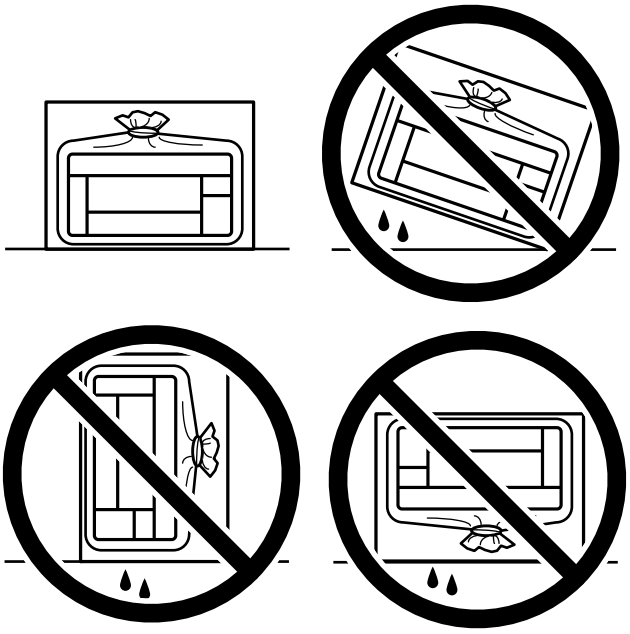

- *When storing or transporting an ink bottle, do not tilt the bottle and do not subject it to impacts or temperature changes. Otherwise, ink may leak even if the cap on the ink bottle is tightened securely. Be sure to keep the ink bottle upright when tightening the cap, and take precautions to prevent ink from leaking when transporting the bottle, for example, putting the bottle in a bag.*
- *Do not put opened ink bottles in the box with printer.*

When you use the printer again, make sure you remove the tape securing the print head. If print quality has declined the next time you print, clean and align the print head.

Related Information

➡ "Checking and Cleaning the Print Head" on page 80
➡ "Aligning the Print Head" on page 84

Solving Problems

Cannot Print or Scan. 124

Printing, Copying, and Scanning Quality is Poor. 136

Cannot Select Paper Type or Paper Source in Printer Driver. 155

A Message is Displayed on the LCD Screen. 155

Paper Gets Jammed. 156

It is Time to Refill the Ink. 164

It is Time to Replace the Maintenance Box. 170

Cannot Operate the Printer as Expected. 172

Cannot Solve Problem. 176

Cannot Print or Scan

Problem Solving

Read this section if you cannot print or scan as expected or if there are problems when printing. See the following for solutions to some common problems.

Is the printer on?

Solutions

- ❏ Make sure the printer is turned on.
- ❏ Make sure the power cord is correctly connected.

➡ "Power Does Not Turn On" on page 172
➡ "Cannot Solve Problem" on page 176

Is the printer itself working properly?

Solutions

- ❏ If an error message is displayed on the LCD screen, check the error.
- ❏ Print a status sheet and use it to check if the printer itself can print properly.

➡ "A Message is Displayed on the LCD Screen" on page 155
➡ "Print Status Sheet:" on page 192

Is any paper jammed in the printer?

Solutions

If paper is jammed in the printer, it cannot start printing. Remove the jammed paper from the printer.

➡ "Paper Gets Jammed" on page 156

Has print data been sent correctly?

Solutions

- ❏ Make sure there is no print data standing by from a previous job.
- ❏ Check the printer driver to make sure the printer is not offline.

➡ "There is still a job waiting to be printed." on page 126
➡ "The printer is paused or offline." on page 126

Are you having connection problems?

Solutions

- ❏ Make sure the cables are properly connected for all connections.
- ❏ Make sure that any network device (router, hub) or USB hub that you use is operating normally.
- ❏ If you have a Wi-Fi connection, make sure that the Wi-Fi connection settings are correct.

- ❑ If you have a network connection, check the network that your computer and printer are connected to, and make sure that the names of the networks match.

➡ "The Printer Cannot Connect to the Network" on page 129
➡ "The Printer Cannot Connect by USB" on page 128
➡ "Checking the Printer's Network Connection Status (Network Connection Report)" on page 105

The Application or Printer Driver do not Work Properly

Cannot Print Even Though a Connection has been Established (Windows)

One of the following situations may be the cause.

A genuine Epson printer driver has not been installed.

Solutions

If a genuine Epson printer driver (EPSON XXXXX) has not been installed, the available functions are limited. We recommend using a genuine Epson printer driver.

➡ "Checking if a genuine Epson printer driver is installed - Windows" on page 99
➡ "Checking if a genuine Epson printer driver is installed - Mac OS" on page 100

There is a problem with the software or data.

Solutions

- ❑ Make sure that a genuine Epson printer driver (EPSON XXXXX) is installed. If a genuine Epson printer driver is not installed, the available functions are limited. We recommend using a genuine Epson printer driver.
- ❑ If you are printing a large data size image, the computer may run out of memory. Print the image at a lower resolution or a smaller size.
- ❑ If you have tried all of the solutions and have not solved the problem, try uninstalling and then reinstalling the printer driver.
- ❑ You may be able to clear the problem by updating the software to the latest version. To check the software status, use the software update tool.

➡ "Checking if a genuine Epson printer driver is installed - Windows" on page 99
➡ "Checking if a genuine Epson printer driver is installed - Mac OS" on page 100
➡ "Installing the Applications Separately" on page 98
➡ "Application for Updating Software and Firmware (Epson Software Updater)" on page 187

There is a problem with the printer's status.

Solutions

Click **EPSON Status Monitor 3** on the printer driver's **Maintenance** tab, and then check the printer status. If **EPSON Status Monitor 3** is disabled, click **Extended Settings** on the **Maintenance** tab, and then select **Enable EPSON Status Monitor 3**.

There is still a job waiting to be printed.

Solutions

Click **Print Queue** on the printer driver's **Maintenance** tab. If unnecessary data remains, select **Cancel all documents** from the **Printer** menu.

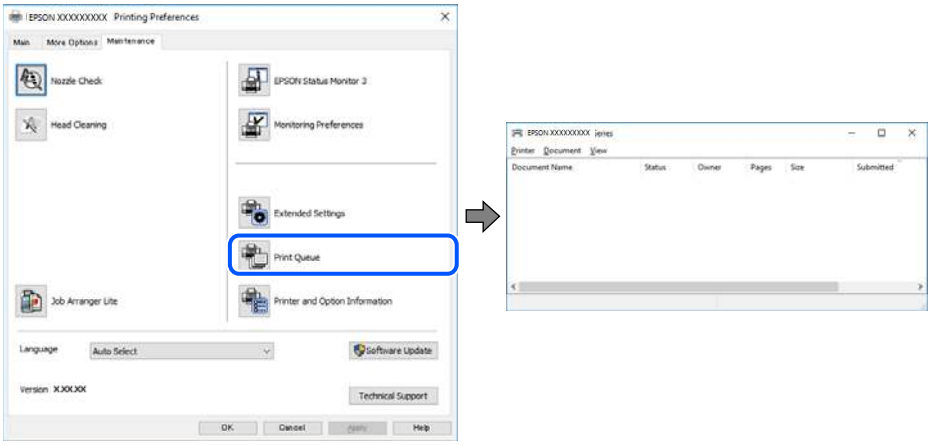

The printer is paused or offline.

Solutions

Click **Print Queue** on the printer driver's **Maintenance** tab.

If the printer is offline or paused, clear the related setting from the **Printer** menu.

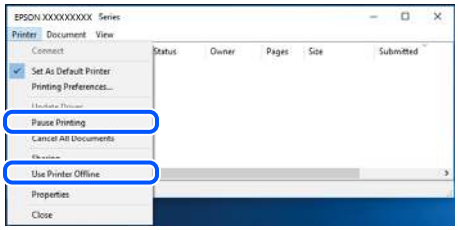

The printer is not selected as the default printer.

Solutions

Right-click the printer icon in **Control Panel** > **View devices and printers** (or **Printers**, or **Printers and Faxes**) and click **Set as default printer**.

Note:
If there are multiple printer icons, select the correct one based on the connection type, as described below.

USB connection: EPSON XXXX Series

Network connection: EPSON XXXX Series (network)

If you install the printer driver multiple times, copies of the printer driver may be created. If copies such as "EPSON XXXX Series (copy 1)" are created, right-click the copied driver icon, and then click **Remove Device**.

The printer port is not set correctly.

Solutions

Click **Print Queue** on the printer driver's **Maintenance** tab.

Make sure the printer port is set correctly as shown below in **Property** > **Port** from the **Printer** menu.

USB connection: **USBXXX**, Network connection: **EpsonNet Print Port**

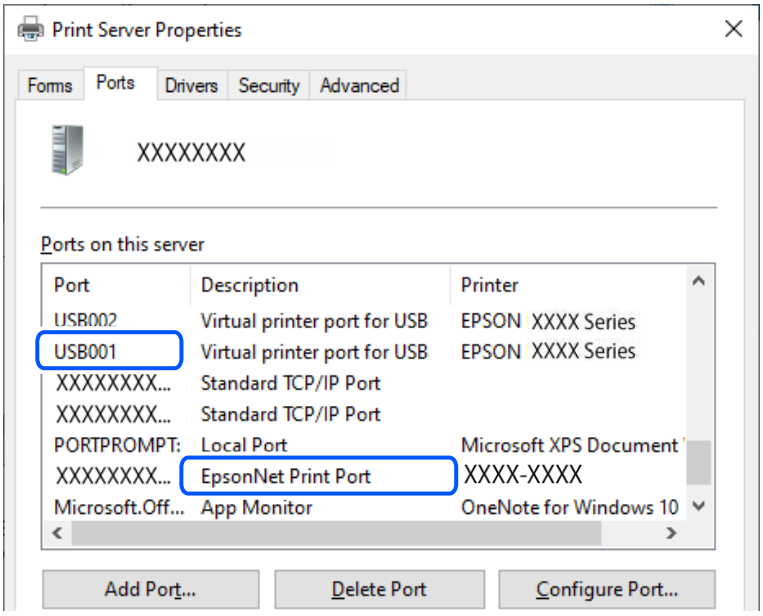

Cannot Print Even Though a Connection has been Established (Mac OS)

One of the following situations may be the cause.

A genuine Epson printer driver has not been installed.

Solutions

If a genuine Epson printer driver (EPSON XXXXX) has not been installed, the available functions are limited. We recommend using a genuine Epson printer driver.

➡ "Checking if a genuine Epson printer driver is installed - Windows" on page 99
➡ "Checking if a genuine Epson printer driver is installed - Mac OS" on page 100

There is a problem with the software or data.

Solutions

- ❑ Make sure that a genuine Epson printer driver (EPSON XXXXX) is installed. If a genuine Epson printer driver is not installed, the available functions are limited. We recommend using a genuine Epson printer driver.
- ❑ If you are printing a large data size image, the computer may run out of memory. Print the image at a lower resolution or a smaller size.
- ❑ If you have tried all of the solutions and have not solved the problem, try uninstalling and then reinstalling the printer driver.
- ❑ You may be able to clear the problem by updating the software to the latest version. To check the software status, use the software update tool.

➡ "Checking if a genuine Epson printer driver is installed - Windows" on page 99
➡ "Checking if a genuine Epson printer driver is installed - Mac OS" on page 100
➡ "Installing the Applications Separately" on page 98

➡ "Application for Updating Software and Firmware (Epson Software Updater)" on page 187

There is a problem with the status of the printer.

Solutions

Make sure the printer status is not set to **Pause**.

Select **System Preferences** (or **System Settings**) from the **Apple** menu > **Printers & Scanners** (or **Print & Scan** or **Print & Fax**), and then double-click the printer. If the printer is paused, click **Resume**.

Cannot Print Even Though a Connection has been Established (iOS)

One of the following situations may be the cause.

Paper Setup Auto Display is disabled.

Solutions

Enable **Paper Setup Auto Display** in the following menu.

Settings > **General Settings** > **Printer Settings** > **Paper Source Setting** > **Paper Setup Auto Display**

AirPrint is disabled.

Solutions

Enable the AirPrint setting in Web Config.

➡ "Application for Configuring Printer Operations (Web Config)" on page 186

Cannot Scan Even Though a Connection has been Correctly Established

Scanning at a high resolution over a network.

Solutions

Try scanning at a lower resolution.

The Printer Cannot Connect by USB

One of the following situations may be the cause.

The USB cable is not plugged into the USB inlet correctly.

Solutions

Connect the USB cable securely to the printer and the computer.

There is a problem with the USB hub.

Solutions

If you are using a USB hub, try to connect the printer directly to the computer.

There is a problem with the USB cable or the USB inlet.

Solutions

Connect the USB cable to a different port, or change the USB cable.

The printer is connected to a SuperSpeed USB port.

Solutions

If you connect the printer to a SuperSpeed USB port using a USB 2.0 cable, a communication error may occur on some computers. In this case, reconnect the printer using one ofthe following methods.

- ❏ Use a USB 3.0 cable(Supported models only).
- ❏ Connect to a Hi-Speed USB port on the computer.
- ❏ Connect to a SuperSpeed USB port other than the port that generated the communication error.

➡ "Interface Specifications" on page 199

The Printer Cannot Connect to the Network

Main causes and solutions for network connection problems

Check the following to see if there is a problem with the operation or settings for the connected device.

Check the cause of the printer network connection failure.

Solutions

Print out the network connection check report to see the issue and check the recommended solutions.

See the following related information for details on reading the network connection check report.

Note:
If you want to check more information on the network settings, print a network status sheet.

➡ "Checking the Printer's Network Connection Status (Network Connection Report)" on page 105
➡ "Messages and Solutions on the Network Connection Report" on page 106

Use the Epson Printer Connection Checker to improve the connection to the computer. (Windows)

Solutions

You may be able to solve the problem depending on the results of the check.

1. Double-click the **Epson Printer Connection Checker** icon on the desktop.

   Epson Printer Connection Checker starts.

   If there is no icon on the desktop, follow the methods below to start Epson Printer Connection Checker.

   - ❏ Windows 11

     Click the start button, and then select **All apps** > **Epson Software** > **Epson Printer Connection Checker**.

❏ Windows 10

Click the start button, and then select **Epson Software** > **Epson Printer Connection Checker**.

❏ Windows 8.1/Windows 8

Enter the application name in the search charm, and then select the displayed icon.

❏ Windows 7

Click the start button, and then select **All Programs** > **Epson Software** > **Epson Printer Connection Checker**.

2. Follow the on-screen instructions.

Note:
If the printer name is not displayed, install a genuine Epson printer driver.

"Checking if a genuine Epson printer driver is installed - Windows" on page 99

When you have identified the problem, follow the solution displayed on the screen.

If you cannot solve the problem, see the information at the links below based on your situation.

❏ The printer is not recognized over a network connection

"Checking the Printer's Network Connection Status (Network Connection Report)" on page 105

❏ The printer is recognized, but printing cannot be performed.

"Cannot Print Even Though a Connection has been Established (Windows)" on page 125

Something is wrong with the network devices for Wi-Fi connection.

Solutions

Try the following if you can reset the wireless LAN router in your environment.

Turn off the devices you want to connect to the network. Wait for about 10 seconds, and then turn on the devices in the following order; wireless router, computer or mobile devices, and then printer. Move the printer and computer or mobile devices closer to the wireless router to help with radio wave communication, and then try to configure network settings again.

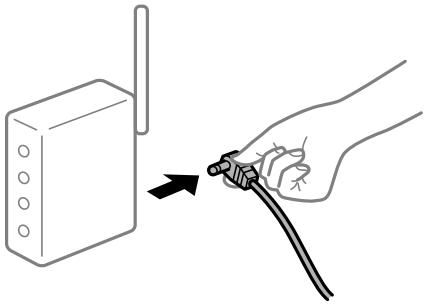

Devices cannot receive signals from the wireless router because they are too far apart.

Solutions

Try the following if you can move the device within the setup environment.

After moving the computer or the smart device and the printer closer to the wireless router, turn off the wireless router, and then turn it back on.

When changing the wireless router, the settings do not match the new router.

Solutions

Reconfigure the settings so that they match the new wireless router.

➡ "Re-Setting the Network Connection" on page 100

The SSIDs connected from the computer or mobile devices and computer are different.

Solutions

When you are using multiple wireless routers at the same time or the wireless router has multiple SSIDs and devices are connected to different SSIDs, you cannot connect to the wireless router.

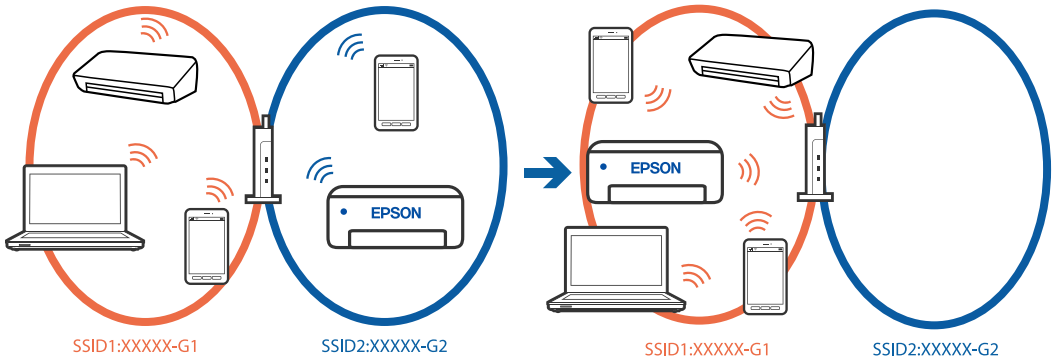

Connect the computer or mobile devices to the same SSID as the printer.

- ❑ Check the SSID that the printer is connected to by printing out the network connection check report.
- ❑ On all of the computers and mobile devices you want to connect to the printer, check the name of the Wi-Fi or network you are connected to.
- ❑ If the printer and your computer or mobile devices are connected to different networks, reconnect the devices to the SSID that the printer is connected to.

➡ "Checking the Printer's Network Connection Status (Network Connection Report)" on page 105

A privacy separator on the wireless router is enabled.

Solutions

Most wireless routers have a separator function that blocks communication between devices within the same SSID. If you cannot communicate between the printer and the computer or mobile devices even if they are connected to the same network, disable the separator function on the wireless router. See the manual provided with the wireless router for details.

The IP address is incorrectly assigned.

Solutions

If the IP address assigned to the printer is 169.254.XXX.XXX, and the subnet mask is 255.255.0.0, the IP address may not be assigned correctly.

Select **Settings** > **General Settings** > **Network Settings** > **Advanced** > **TCP/IP** on the printer's control panel, and then check the IP address and the subnet mask assigned to the printer.

Restart the wireless router or reset the network settings for the printer.

If the printer network settings are incorrect, reconfigure the printer network settings according to the network environment.

➡ "Setting a Static IP Address for the Printer" on page 117

The device connected to the USB 3.0 port causes radio frequency interference.

Solutions

When you connect a device to the USB 3.0 port on a Mac, radio frequency interference may occur. Try the following if you cannot connect to wireless LAN (Wi-Fi) or if operations become unstable.

- ❏ Place the device that is connected to the USB 3.0 port further away from the computer.
- ❏ Connect to the SSID for the 5 GHz range.

There is a problem with the network settings on the computer or mobile devices.

Solutions

Try accessing any website from your computer or mobile devices to make sure that your device's network settings are correct. If you cannot access any websites, there is a problem on the computer or mobile devices.

Check the network connection for the computer or mobile devices. See the documentation provided with the computer or mobile devices for details.

The printer has been connected by Ethernet using devices that support IEEE802.3az (Energy Efficient Ethernet).

Solutions

When you connect the printer by Ethernet using devices that support IEEE802.3az (Energy Efficient Ethernet), the following problems may occur depending on the hub or router that you are using.

- ❏ Connection becomes unstable, the printer is connected and disconnected again and again.
- ❏ Cannot connect to the printer.
- ❏ The communication speed becomes slow.

Follow the steps below to disable IEEE802.3az for the printer and then connect.

1. Remove the Ethernet cable connected to the computer and the printer.
2. When IEEE802.3az for the computer is enabled, disable it.

   See the documentation provided with the computer for details.
3. Connect the computer and the printer with an Ethernet cable directly.
4. On the printer, print a network connection report.

   "Checking the Printer's Network Connection Status (Network Connection Report)" on page 105
5. Check the printer's IP address on the network connection report.
6. On the computer, access Web Config.

   Launch a Web browser, and then enter the printer's IP address.

   "Application for Configuring Printer Operations (Web Config)" on page 186

7. Select **Log in** and enter the administrator password.
8. Select **Network** > **Wired LAN**.
9. Select **OFF** for **IEEE 802.3az**.
10. Click **Next**.
11. Click **OK**.
12. Remove the Ethernet cable connected to the computer and the printer.
13. If you disabled IEEE802.3az for the computer in step 2, enable it.
14. Connect the Ethernet cables that you removed in step 1 to the computer and the printer.

If the problem still occurs, devices other than the printer may be causing the problem.

Paper Does Not Feed Properly

Points to Check

One of the following situations may be the cause.

The installation location is inappropriate.

Solutions

Place the printer on a flat surface and operate in the recommended environmental conditions.

➡ "Environmental Specifications" on page 205

Unsupported paper is being used.

Solutions

Use paper supported by this printer.

➡ "Available Paper and Capacities" on page 179
➡ "Unavailable Paper Types" on page 182

Paper handling is inappropriate.

Solutions

Follow paper handling precautions.

➡ "Paper Handling Precautions" on page 26

Too many sheets are loaded in the printer.

Solutions

Do not load more than the maximum number of sheets specified for the paper. For plain paper, do not load above the line indicated by the triangle symbol on the edge guide.

➡ "Available Paper and Capacities" on page 179

The paper settings on the printer are incorrect.

Solutions

Make sure the paper size and paper type settings match the actual paper size and paper type loaded in the printer.

➡ "Paper Size and Type Settings" on page 27

Paper slips when paper dust adheres to the roller.

Solutions

If the paper you have been using until now does not feed properly, paper dust may have adhered to the roller. Clean the roller.

Paper Feeds at a Slant

One of the following situations may be the cause.

The paper is curled.

Solutions

If the paper is curled or the edges of the paper are folded, it may touch the print head and be fed at an angle.

Place the paper on a flat surface to check if it is curled. If it is, flatten it.

The paper is loaded incorrectly.

Solutions

Load paper in the correct direction, and slide the edge guides against the edges of the paper.

➡ "Loading Paper" on page 28

Several Sheets of Paper are Fed at a Time

One of the following situations may be the cause.

The paper is moist or damp.

Solutions

Load new paper.

Static electricity is causing sheets of paper to stick to each other.

Solutions

Fan the paper before loading. If the paper still does not feed, load one sheet of paper at a time.

Multiple sheets of paper feed at the same time during manual 2-sided printing.

Solutions

Remove any paper that is loaded in the paper source before you reload the paper.

Paper is Ejected During Printing

Letterhead is not selected as the paper type.

Solutions

When you load letterhead paper (paper on which information such as the sender's name or corporation name are pre-printed in the header), select **Letterhead** as the paper type setting.

Original Does Not Feed in the ADF

One of the following situations may be the cause.

Unsupported originals are being used.

Solutions

Use originals supported by the ADF.

➡ "ADF Specifications" on page 198

The originals are loaded incorrectly.

Solutions

Load originals in the correct direction, and slide the ADF edge guide against the edge of the originals.

Too many originals are loaded in the ADF.

Solutions

Do not load originals above the line indicated by the triangle symbol on the ADF.

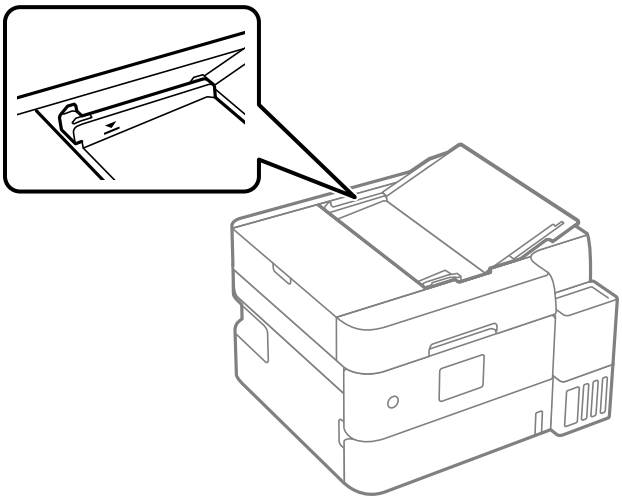

A paper feeding problem occurred in the ADF.

Solutions

Reduce the amount of paper being loaded.

The original slips when paper dust adheres to the roller.

Solutions

Clean the inside of the ADF.

➡ "Cleaning the ADF" on page 86

Originals are not detected.

Solutions

On the screen for copy, scan, check that the ADF icon is on. If it is off, place the originals again.

Printing, Copying, and Scanning Quality is Poor

Print Quality is Poor

Color Missing, Banding, or Unexpected Colors Appear in Printout

The print head nozzles may be clogged.

Solutions

- ❑ Perform a nozzle check to see if the print head nozzles are clogged. Perform a nozzle check, and then clean the print head if any of the print head nozzles are clogged. If you have not used the printer for a long time, the print head nozzles may be clogged and ink drops may not be discharged.
- ❑ If you printed when the ink levels were too low to be seen in the ink tanks windows, refill the ink tank to the upper lines and then use the **Power Ink Flushing** utility to replace the ink inside the ink tubes. After you use the utility, perform a nozzle check to see if print quality has improved.

➡ "Checking and Cleaning the Print Head" on page 80
➡ "Running Power Cleaning" on page 82
➡ "Adjusting the Print Quality" on page 79

Print Quality is Poor with Black Ink

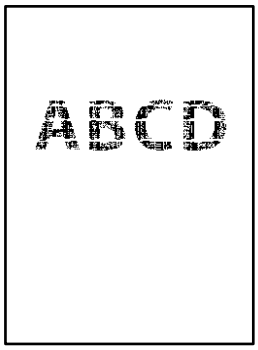

The print head nozzles may be clogged.

Solutions

- Perform a nozzle check to see if the print head nozzles are clogged. Perform a nozzle check, and then clean the print head if any of the print head nozzles are clogged. If you have not used the printer for a long time, the print head nozzles may be clogged and ink drops may not be discharged.

  "Checking and Cleaning the Print Head" on page 80

- If you cannot solve the problem using head cleaning, you can print immediately with a mixture of color inks to create composite black by changing the following settings in Windows.

  Click **Extended Settings** on the printer driver's **Maintenance** tab. If you select **Use a Mixture of Color Inks to Create Black**, you can print at **Standard** print quality when the **Paper Type** is **Plain paper**, **Letterhead**, or **Envelope**.

  Note that this feature cannot solve nozzle clogging. To solve nozzle clogging, contact Epson support.

Colored Banding Appears at Intervals of Approximately 3.4 cm

The following causes can be considered.

The paper type in the printer settings is incorrect.

Solutions

Make sure the paper type in the printer settings matches the actual paper type.

➡ "List of Paper Type" on page 27

The print quality setting is too low.

Solutions

When printing on plain paper,use a higher quality setting.

❏ Windows

Select **High** from **Quality** on the printer driver's **Main** tab.

❏ Mac OS

Select **Fine** as **Print Quality** from the print dialog's **Print Settings** menu.

➡ "Quality:" on page 61

The print head position is out of alignment.

Solutions

Select the **Maintenance** > **Print Head Alignment** > **Horizontal Alignment** menu on the control panel to align the print head.

Blurry Prints, Vertical Banding, or Misalignment

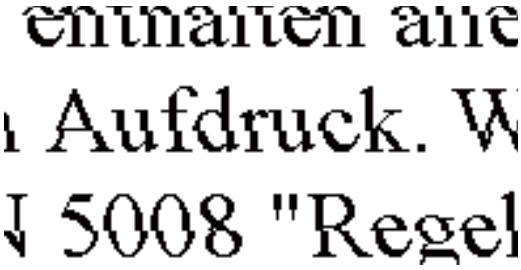

One of the following situations may be the cause. Try the solutions in the order shown.

The print head position is out of alignment.

Solutions

Select the **Maintenance** > **Print Head Alignment** > **Vertical Alignment** menu on the control panel to align the print head.

The bidirectional printing setting is enabled.

Solutions

If print quality does not improve even after aligning the print head, disable the bidirectional setting.

During bidirectional (or high speed) printing, the print head prints while moving in both directions, and vertical lines may be misaligned. Disabling this setting may slow down printing speed but improve print quality.

❏ Windows

Clear **Bidirectional Printing** on the printer driver's **More Options** tab.

❏ Mac OS

Select **System Preferences** (or **System Settings**) from the Apple menu > **Printers & Scanners** (or **Print & Scan** or **Print & Fax**), and then select the printer. Click **Options & Supplies** > **Options** (or **Driver**). Select **Off** as the **Bidirectional Printing** setting.

Printout Comes Out as a Blank Sheet

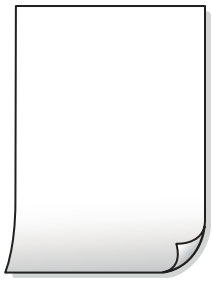

The print head nozzles may be clogged.

Solutions

Perform the nozzle check, and then try Cleaning or Power Cleaning if the print head nozzles are clogged.

➡ "Checking and Cleaning the Print Head" on page 80
➡ "Running Power Cleaning" on page 82
➡ "Adjusting the Print Quality" on page 79

The print settings and the paper size loaded in the printer are different.

Solutions

Change the print settings according to the paper size loaded in the paper cassette. Load paper in the paper cassette that matches the print settings.

Multiple sheets of paper are fed into the printer at the same time.

Solutions

See the following to prevent multiple sheets of paper being fed into the printer at the same time.

➡ "Several Sheets of Paper are Fed at a Time" on page 134

Printed at an Angle

The paper is curled.

Solutions

If the paper is curled or the edges of the paper are folded, it may touch the print head and be fed at an angle.

Place the paper on a flat surface to check if it is curled. If it is, flatten it.

The paper is loaded incorrectly.

Solutions

Load paper in the correct direction, and slide the edge guides against the edges of the paper.

➡ "Loading Paper" on page 28

Paper Is Smeared or Scuffed

One of the following situations may be the cause.

The paper is loaded incorrectly.

Solutions

When horizontal banding (perpendicular to the printing direction) appears, or the top or bottom of the paper is smeared, load paper in the correct direction and slide the edge guides to the edges of the paper.

➡ "Loading Paper" on page 28

The paper path is smeared.

Solutions

When vertical banding (parallel to the printing direction) appears, or the paper is smeared, clean the paper path.

➡ "Cleaning the Paper Path for Ink Smears" on page 84

The paper is curled.

Solutions

Place the paper on a flat surface to check if it is curled. If it is, flatten it.

The print head is rubbing the surface of the paper.

Solutions

When printing on thick paper, the print head is close to the printing surface and the paper may be scuffed. In this case, enable the reduce scuff setting. If you enable this setting, print quality may decline or printing may slow down.

Windows

Click **Extended Settings** on the printer driver's **Maintenance** tab, and then select **Short Grain Paper**.

The back of the paper was printed before the side that had already been printed was dry.

Solutions

When performing manual 2-sided printing, make sure that the ink is completely dry before reloading the paper.

When printing using automatic 2-sided printing, the print density is too high and the drying time is too short.

Solutions

When using the automatic 2-sided printing feature and printing high density data such as images and graphs, set the print density to lower and the drying time to longer.

Printed Photos are Sticky

The wrong side of the photo paper was used.

Solutions

Make sure you are printing on the printable side. If you print on the wrong side of the photo paper, you need to clean the paper path.

Images or Photos Contain Unexpected Colors

One of the following situations may be the cause.

The print head nozzles may be clogged.

Solutions

Perform a nozzle check to see if the print head nozzles are clogged. Perform a nozzle check, and then clean the print head if any of the print head nozzles are clogged. If you have not used the printer for a long time, the print head nozzles may be clogged and ink drops may not be discharged.

➡ "Checking and Cleaning the Print Head" on page 80
➡ "Running Power Cleaning" on page 82
➡ "Adjusting the Print Quality" on page 79

Color correction has been applied.

Solutions

When printing from the Windows printer driver, the Epson auto photo adjustment setting is applied by default depending on the paper type. Try changing the setting.

On the **More Options** tab, select **Custom** in **Color Correction**, and then click **Advanced**. Change the **Scene Correction** setting from **Automatic** to any other option. If changing the setting does not work, use any color correction method other than **PhotoEnhance** in **Color Management**.

Colors in the Printout Differ from Those on the Display

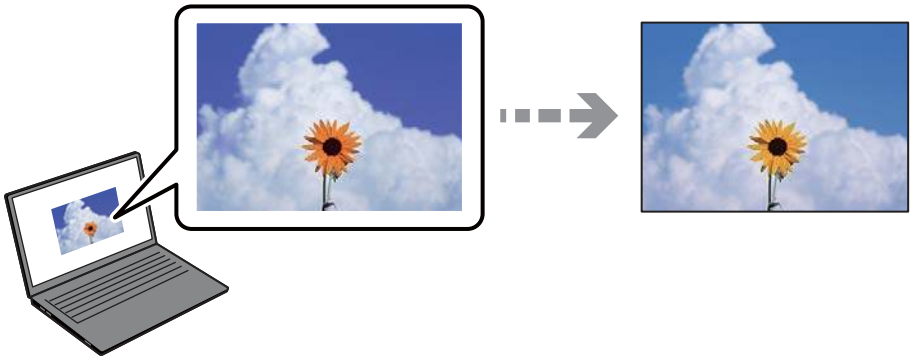

The color properties for the display device you are using have not been adjusted correctly.

Solutions

Display devices such as computer screens have their own display properties. If the display is unbalanced, the image is not displayed with proper brightness and colors. Adjust the properties of the display device, then perform the following.

❏ Windows

Access the printer driver window, select **Custom** as the **Color Correction** setting on the **More Options** tab, and then click **Advanced**. Select **EPSON Standard** as the **Color Mode** setting.

❏ Mac OS

Access the print dialog. Select **Color Options** from the pop-up menu, and then click the arrow next to **Advanced Settings**. Select **EPSON Standard** as the **Mode** setting.

The display device is reflecting external light.

Solutions

Avoid direct sunlight and view the image in an environment where the appropriate lighting is assured.

The display device has a high resolution.

Solutions

Colors may differ from what you see on mobile devices with high-resolution displays.

The display device and the printer have a different process of producing colors.

Solutions

Colors on a display are not quite identical to those on paper because the display device and the printer have a different process of producing colors. Adjust the color properties so that the colors match more closely.

Cannot Print Without Margins

The borderless feature is not enabled in the print settings.

Solutions

Enable the borderless feature in the print settings. If you select a paper type that does not support borderless printing, you cannot select **Borderless**. Select a paper type that supports borderless printing.

- ❏ Control panel

  Select **Borderless** as **Border Setting**.

- ❏ Windows

  Select **Borderless** on the printer driver's **Main** tab.

- ❏ Mac OS

  Select a borderless paper size from **Paper Size**.

The Edges of the Image are Cropped During Borderless Printing

Because the image is slightly enlarged, the protruding area is cropped.

Solutions

Select a smaller enlargement setting.

- ❏ Control panel

  Change the **Expansion** setting.

- ❏ Windows

  Click **Settings** next to the **Borderless** checkbox on the printer driver's **Main** tab, and then change the settings.

❏ Mac OS

Change the **Expansion** setting from the print dialog's **Print Settings** menu.

Aspect ratios of the image data and paper size are different.

Solutions

If the aspect ratios of the image data and paper size are different, the long side of the image is cropped if it extends beyond the long side of the paper.

The Position, Size, or Margins of the Printout Are Incorrect

One of the following situations may be the cause.

The paper is loaded incorrectly.

Solutions

Load paper in the correct direction, and slide the edge guides against the edges of the paper.

➡ "Loading Paper" on page 28

The paper size in the printer settings is incorrect.

Solutions

Make sure the paper size in the printer settings matches the actual paper size.

The margin setting inthe application software is not within the printable area.

Solutions

Adjust the margin setting in the application so that it falls within the printable area.

➡ "Printable Area" on page 197

Printed Characters Are Incorrect or Garbled

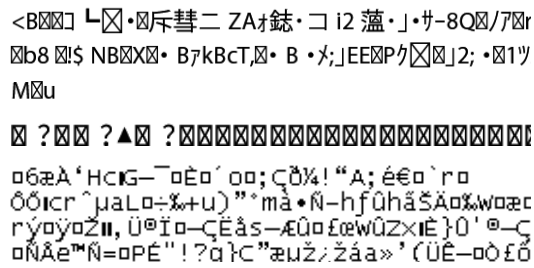

One of the following situations may be the cause.

The USB cable is not connected correctly.

Solutions

Connect the USB cable securely to the printer and the computer.

There is a job waiting to be printed.

Solutions

Cancel any paused print jobs.

➡ "There is still a job waiting to be printed." on page 126

The computer has been manually put into the Hibernate or Sleep mode while printing.

Solutions

Do not put the computer manually into the **Hibernate** mode or **Sleep** mode while printing. Pages of garbled text may be printed the next time you start the computer.

You are using the wrong printer driver.

Solutions

Make sure that the printer driver you are using is for this printer. Check the printer name on the top of the printer driver window.

The Printed Image Is Inverted

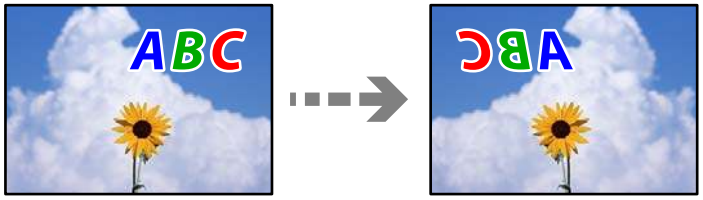

The invert option is enabled in the print settings.

Solutions

Clear any mirror image settings in the printer driver or the application.

- ❑ Windows

  Clear **Mirror Image** on the printer driver's **More Options** tab.

- ❑ Mac OS

  Clear **Mirror Image** from the print dialog's **Print Settings** menu.

Mosaic-Like Patterns Appear in the Printout

Low resolution images or photos were printed.

Solutions

When printing images or photos, print using high-resolution data. Images on web sites are often low resolution even if they look good enough on the display, and so print quality may decline when you print them.

Copy Quality is Poor

Banding or Unexpected Colors Appear, or Colors Are Missing

The print head nozzles may be clogged.

Solutions

- Perform a nozzle check to see if the print head nozzles are clogged. Perform a nozzle check, and then clean the print head if any of the print head nozzles are clogged. If you have not used the printer for a long time, the print head nozzles may be clogged and ink drops may not be discharged.
- If you printed when the ink levels were too low to be seen in the ink tanks windows, refill the ink tank to the upper lines and then use the **Power Ink Flushing** utility to replace the ink inside the ink tubes. After you use the utility, perform a nozzle check to see if print quality has improved.

➡ "Checking and Cleaning the Print Head" on page 80
➡ "Running Power Cleaning" on page 82
➡ "Adjusting the Print Quality" on page 79

Colored Banding Appears at Intervals of Approximately 3.4 cm

The following causes can be considered.

The paper type in the printer settings is incorrect.

Solutions

Make sure the paper type in the printer settings matches the actual paper type.

➡ "List of Paper Type" on page 27

The print head position is out of alignment.

Solutions

Select the **Maintenance** > **Print Head Alignment** > **Horizontal Alignment** menu on the control panel to align the print head.

The print quality is set to low.

Solutions

When copying on plain paper, use a higher quality setting.

Select **Advanced Settings** > **Quality** and then select **High** in each copy menu.

Blurry Copies, Vertical Banding, or Misalignment

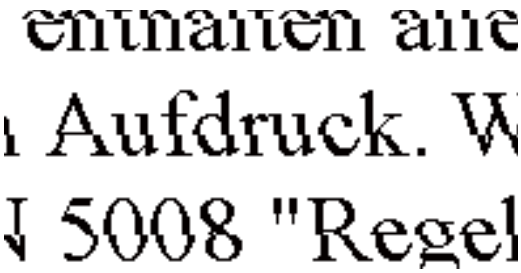

One of the following situations may be the cause.

The print head position is out of alignment.

Solutions

Select the **Maintenance** > **Print Head Alignment** > **Vertical Alignment** menu on the control panel to align the print head.

Printout Comes Out as a Blank Sheet

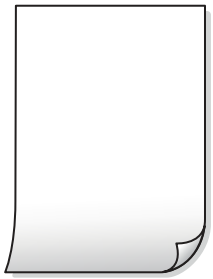

The print head nozzles may be clogged.

Solutions

Perform the nozzle check, and then try Cleaning or Power Cleaning if the print head nozzles are clogged.

➡ "Checking and Cleaning the Print Head" on page 80
➡ "Running Power Cleaning" on page 82
➡ "Adjusting the Print Quality" on page 79

The print settings and the paper size loaded in the printer are different.

Solutions

Change the print settings according to the paper size loaded in the paper cassette. Load paper in the paper cassette that matches the print settings.

Multiple sheets of paper are fed into the printer at the same time.

Solutions

See the following to prevent multiple sheets of paper being fed into the printer at the same time.

➡ "Several Sheets of Paper are Fed at a Time" on page 134

Paper Is Smeared or Scuffed

One of the following situations may be the cause.

The paper is loaded incorrectly.

Solutions

When horizontal banding (perpendicular to the printing direction) appears, or the top or bottom of the paper is smeared, load paper in the correct direction and slide the edge guides to the edges of the paper.

➡ "Loading Paper" on page 28

The paper path is smeared.

Solutions

When vertical banding (parallel to the printing direction) appears, or the paper is smeared, clean the paper path.

➡ "Cleaning the Paper Path for Ink Smears" on page 84

The paper is curled.

Solutions

Place the paper on a flat surface to check if it is curled. If it is, flatten it.

Cannot Copy Without Margins

Borderless is not set in the print settings.

Solutions

Select **Copy** > **Advanced Settings** > **Borderless Copy**, and then enable the setting . If you select a paper that does not support borderless printing, you cannot enable borderless settings. Select a paper type that supports borderless printing.

➡ "Paper for Borderless Printing" on page 181

The edges of the Image are Cropped During Borderless Copying

Because the image is slightly enlarged, the protruding area is cropped.

Solutions

Select a smaller enlargement setting.

Select **Copy** > **Advanced Settings** > **Borderless Copy** > **Expansion** on the control panel, and then change the setting.

The Position, Size, or Margins of the Copies are Incorrect

The following causes can be considered.

The paper is loaded incorrectly.

Solutions

Load paper in the correct direction, and slide the edge guides against the edges of the paper.

➡ "Loading Paper" on page 28

The originals are not placed correctly.

Solutions

- ❑ If you are using the scanner glass, make sure the original is placed correctly against the alignment marks.
- ❑ If you are using the scanner glass and the edge of the scanned image is missing, move the original slightly away from the edge of the scanner glass.

➡ "Placing Originals" on page 29

There is dust or dirt on the scanner glass.

Solutions

When placing the originals on the scanner glass, remove any dust or dirt from the originals, and clean the scanner glass. If there is dust or stains on the glass, the copy area may extend to include the dust or stains, resulting in the wrong copying position or small images.

➡ "Cleaning the Scanner Glass" on page 85

The paper size in the printer settings is incorrect.

Solutions

Make sure the paper size in the printer settings matches the actual paper size.

Uneven Colors, Smears, Dots, or Straight Lines Appear in the Copied Image

One of the following situations may be the cause.

The paper path is dirty.

Solutions

Clean the paper path.

➡ "Cleaning the Paper Path for Ink Smears" on page 84

There is dust or dirt on the originals or the scanner glass.

Solutions

Remove any dust or dirt from the originals, and clean the scanner glass.

➡ "Cleaning the Scanner Glass" on page 85

There is dust or dirt on the ADF or originals.

Solutions

Clean the ADF, and remove any dust or dirt from the originals.

➡ "Cleaning the ADF" on page 86

The original was pressed with too much force.

Solutions

If you press with too much force, blurring, smudges, and spots may occur.

Do not press with too much force on the original or the document cover.

➡ "Placing Originals" on page 29

The copy density setting is too high.

Solutions

Lower the copy density setting.

➡ "Basic Menu Options for Copying" on page 59

Moiré (Cross-Hatch) Patterns Appear in the Copied Image

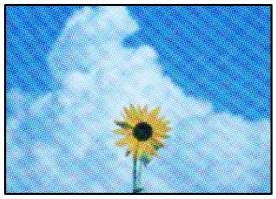

If the original is a printed document such as a magazine or a catalog, a dotted moiré pattern appears.

Solutions

Change the reduce and enlarge setting. If a moiré pattern still appears, place the original at a slightly different angle.

➡ "Basic Menu Options for Copying" on page 59

An Image of the Reverse Side of the Original Appears in the Copied Image

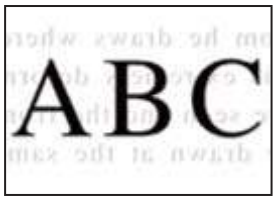

One of the following situations may be the cause.

When scanning thin originals, images on the back may be scanned at the same time.

Solutions

Place the original on the scanner glass and then place a piece of black paper over it.

The copy density setting is too high.

Solutions

Lower the copy density setting.

➡ "Basic Menu Options for Copying" on page 59

The Text or Image Copied from the ADF is Squeezed or Stretched

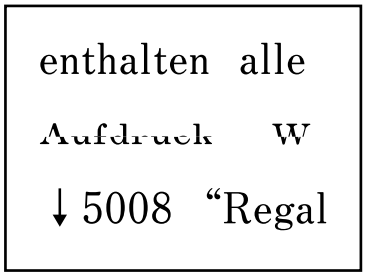

Some originals may not be scanned properly from the ADF.

Solutions

Place originals on the scanner glass.

Select ⓘ, and then select **How To** > **Place Originals** > **Scanner Glass**. Select **Finish** to close the animation screen.

➡ "Placing Originals" on page 30

Scanned Image Problems

Uneven Colors, Dirt, Spots, Appear when Scanning from the Scanner Glass

There is dust or dirt on the originals or the scanner glass.

Solutions

Remove any dust or dirt from the originals, and clean the scanner glass.

➡ "Cleaning the Scanner Glass" on page 85

The original was pressed with too much force.

Solutions

If you press with too much force, blurring, smudges, and spots may occur.

Do not press with too much force on the original or the document cover.

➡ "Placing Originals" on page 29

Straight Lines Appear when Scanning from ADF

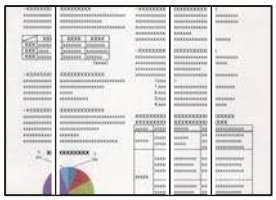

There is dust or dirt on the ADF or originals.

Solutions

Clean the ADF, and remove any dust or dirt from the originals.

➡ "Cleaning the ADF" on page 86

An Image of the Reverse Side of the Original Appears in the Scanned Image

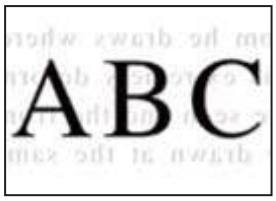

When scanning thin originals, images on the back may be scanned at the same time.

Solutions

Place the original on the scanner glass and then place a piece of black paper over it.

➡ "Placing Originals" on page 30

Cannot Scan the Correct Area

The originals are not placed correctly.

Solutions

- ❏ If you are using the scanner glass, make sure the original is placed correctly against the alignment marks.
- ❏ If you are using the scanner glass and the edge of the scanned image is missing, move the original slightly away from the edge of the scanner glass.

➡ "Placing Originals" on page 29

There is dust or dirt on the scanner glass.

Solutions

Remove any dust or dirt from the scanner glass and document cover. If there is any dust or dirt around the original, the scanning range expands to include it.

➡ "Cleaning the Scanner Glass" on page 85

When scanning multiple originals using Epson ScanSmart, there is not enough of a gap between the originals.

Solutions

When placing multiple originals on the scanner glass, make sure there is a gap of at least 20 mm (0.8 in.) between the originals.

Cannot Solve Problems in the Scanned Image

Check the following if you have tried all of the solutions and have not solved the problem.

There are problems with the scanning software settings.

Solutions

Use Epson Scan 2 Utility to initialize the settings for the scanner software.

Note:
Epson Scan 2 Utility is an application supplied with the scanner software.

Note:
*For Windows Server operating systems, make sure the **Desktop Experience** feature is installed.*

1. Start the Epson Scan 2 Utility.
   - ❏ Windows 11
     Click the start button, and then select **All apps** > **EPSON** > **Epson Scan 2 Utility**.
   - ❏ Windows 10/Windows Server 2022/Windows Server 2019/Windows Server 2016
     Click the start button, and then select **EPSON** > **Epson Scan 2 Utility**.
   - ❏ Windows 8.1/Windows 8/Windows Server 2012 R2/Windows Server 2012
     Enter the application name in the search charm, and then select the displayed icon.
   - ❏ Windows 7/Windows Server 2008 R2/Windows Server 2008
     Click the start button, and then select **All Programs** > **EPSON** > **Epson Scan 2** > **Epson Scan 2 Utility**.
   - ❏ Mac OS
     Select **Go** > **Applications** > **Epson Software** > **Epson Scan 2 Utility**.
2. Select the **Other** tab.
3. Click **Reset**.

If initialization does not solve the problem, uninstall and reinstall the scanner software.

➡ "Installing the Applications Separately" on page 98

Cannot Select Paper Type or Paper Source in Printer Driver

A genuine Epson printer driver has not been installed.

Solutions

If a genuine Epson printer driver (EPSON XXXXX) has not been installed, the available functions are limited. We recommend using a genuine Epson printer driver.

➡ "Checking if a genuine Epson printer driver is installed - Windows" on page 99
➡ "Checking if a genuine Epson printer driver is installed - Mac OS" on page 100

A Message is Displayed on the LCD Screen

If an error message is displayed on the LCD screen, follow the on-screen instructions or the solutions below to solve the problem.

Error Messages	Solutions
Printer Error Turn on the printer again. See your documentation for more details.	Open the inner cover and the scanner unit, and then remove any paper or protective material inside the printer. Turn the power off and on again.
Paper out in XX.	Load paper, and then insert the paper cassette all the way.

Error Messages	Solutions
The printer's borderless printing ink pad is nearing the end of its service life. It is not a user-replaceable part. Please contact Epson support.	Contact Epson or an authorised Epson service provider to replace the borderless printing ink pad*. It is not a user-serviceable part. Select **Dismiss** to resume printing.
The printer's borderless printing ink pad has reached the end of its service life. It is not a user-replaceable part. Please contact Epson support.	Contact Epson or an authorised Epson service provider to replace the borderless printing ink pad*. It is not a user-serviceable part. However, you can perform operations that do not use ink such as scanning.
Paper Setup Auto Display is set to Off. Some features may not be available. For details, see your documentation.	If **Paper Setup Auto Display** is disabled, you cannot use AirPrint.
The combination of the IP address and the subnet mask is invalid. See your documentation for more details.	Enter the correct IP address or default gateway. Contact the person who setup the network for assistance.
To use cloud services, update the root certificate from the Epson Web Config utility.	Run Web Config, and then update the root certificate.
Check that the printer driver is installed on the computer and that the port settings for the printer are correct.	Click **Print Queue** on the printer driver's **Maintenance** tab. Make sure the printer port is selected correctly in **Property** > **Port** from the **Printer** menu as follows. Select "**USBXXX**" for a USB connection, or "**EpsonNet Print Port**" for a network connection.
Check that the printer driver is installed on the computer and that the USB port settings for the printer are correct.	
Recovery Mode Update Firmware	The printer has started in recovery mode because the firmware update failed. Follow the steps below to try to update the firmware again. Follow the steps below to try to update the firmware again. 1. Connect the computer and the printer with a USB cable. ***Important:*** ❏ *During recovery mode, you cannot update the firmware over a network connection. You can only use a USB connection.* ❏ *Use a USB 2.0 type A-B cable.* 2. Download the latest firmware from your local Epson website to your computer, and then start the update.

*In some print cycles a very small amount of surplus ink may be collected in the borderless printing ink pad. To prevent ink leakage from the pad, the product is designed to stop borderless printing when the pad has reached its limit. Whether and how often this is required will vary according to the number of pages you print using the borderless print option. The need for replacement of the pad does not mean that your printer has ceased to operate in accordance with its specifications. The printer will advise you when the pad requires replacing and this can only be performed by an authorised Epson Service provider. The Epson warranty does not cover the cost of this replacement.

Paper Gets Jammed

Check the error displayed on the control panel and follow the instructions to remove the jammed paper, including any torn pieces. Next, clear the error.

Important:

- ❏ *Remove the jammed paper carefully. Removing the paper with too much force may damage the printer.*
- ❏ *When removing jammed paper, avoid tilting the printer, placing it vertically, or turning it upside down; otherwise ink may leak.*

Removing Jammed Paper

Caution:

- ❏ *Be careful not to trap your hand or fingers when opening or closing the scanner unit. Otherwise you may be injured.*
- ❏ *Never touch the buttons on the control panel while your hand is inside the printer. If the printer starts operating, it could cause an injury. Be careful not to touch the protruding parts to avoid injury.*

1. Remove the rear cover.

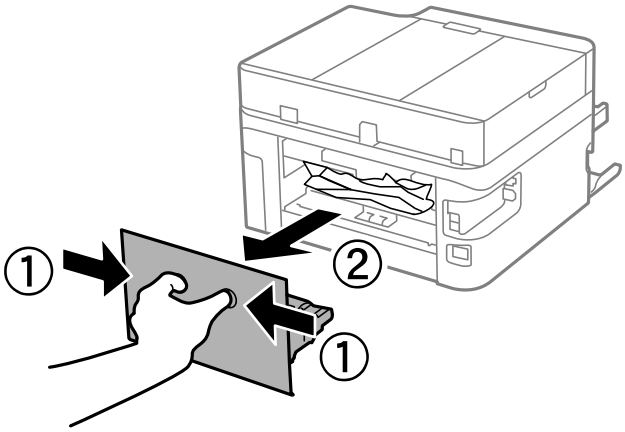

2. Remove the jammed paper.

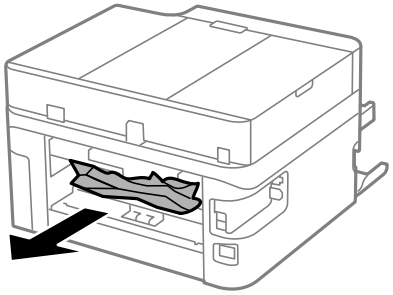

3. Remove jammed paper from the rear cover.

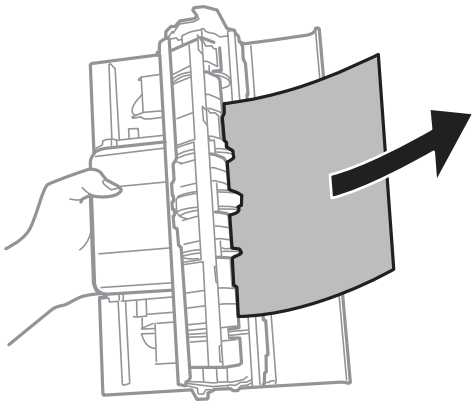

4. Insert the rear cover in the printer.
5. Close the document cover if it is open.
6. Raise the control panel.

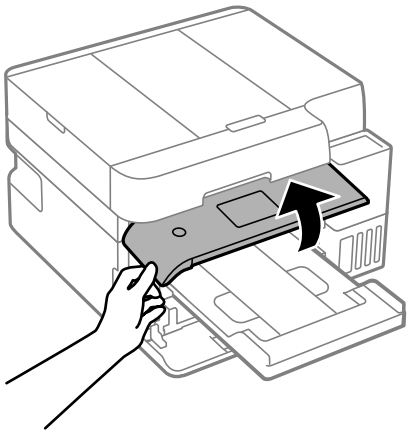

7. Open the scanner unit until it clicks.

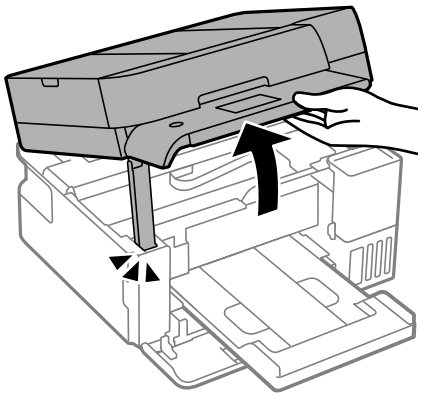

8. Remove the jammed paper.

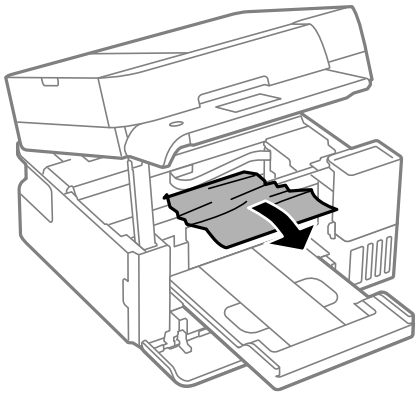

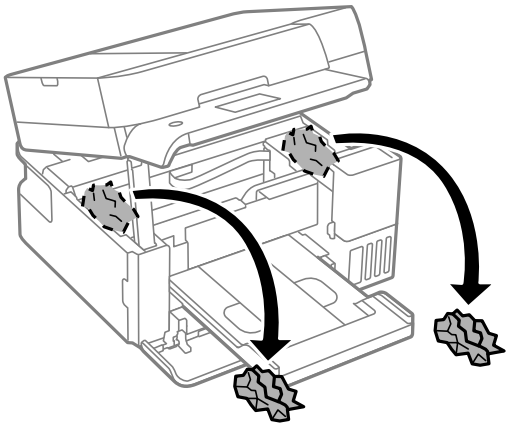

Important:

Do not touch the white flat cable, translucent film, and ink tubes inside the printer. Doing so may cause a malfunction.

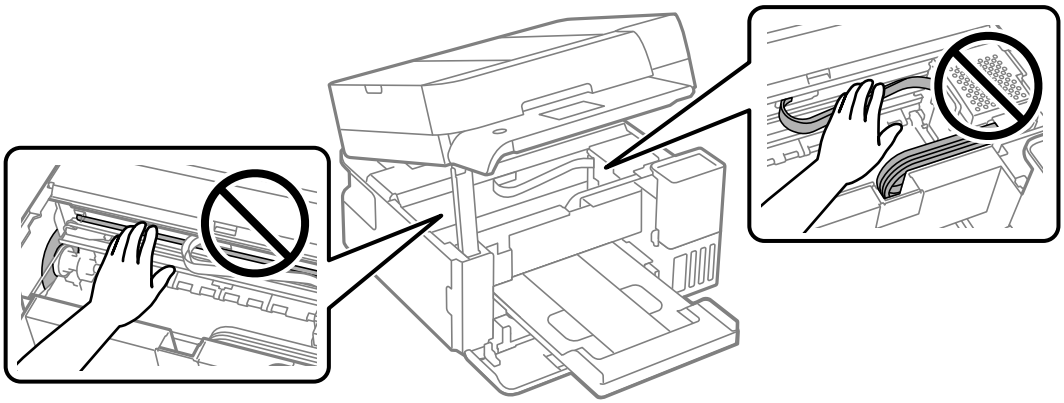

9. Close the scanner unit.

   For safety, the scanner unit is closed in two steps.

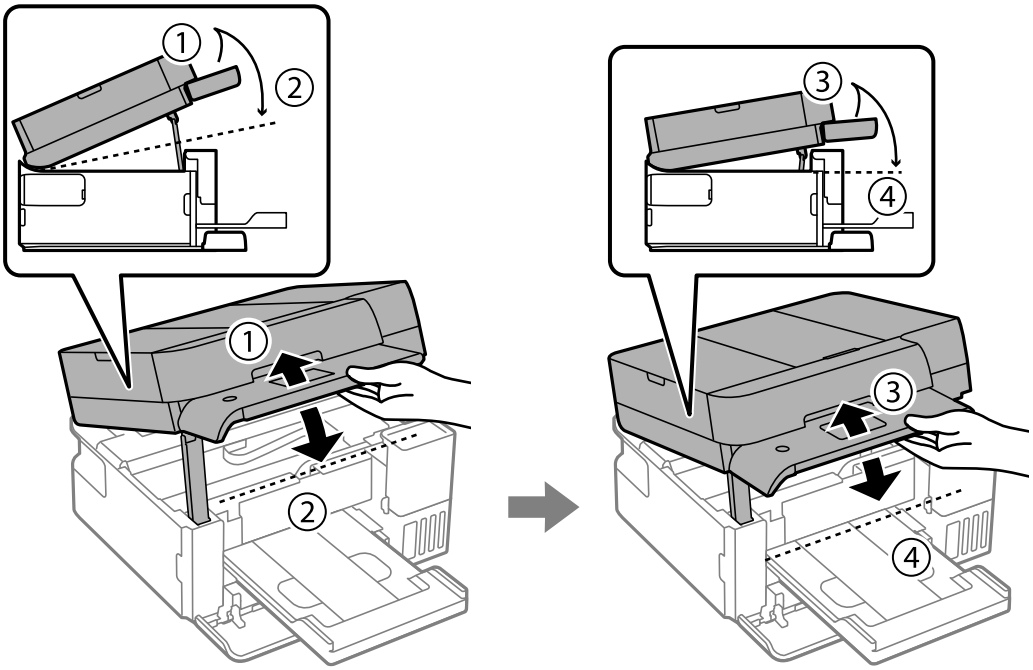

Note:
The scanner unit must be closed completely before it can be opened again.

Removing Jammed Paper from the ADF

1. Open the ADF cover.

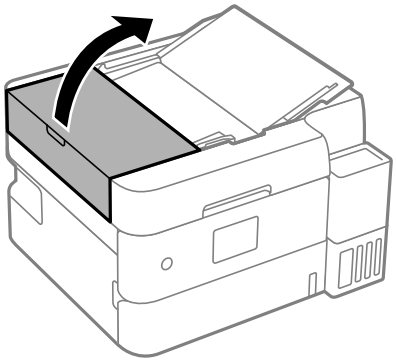

2. Remove the jammed paper.

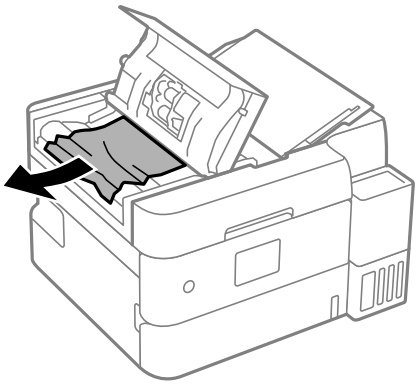

3. Open the document cover.

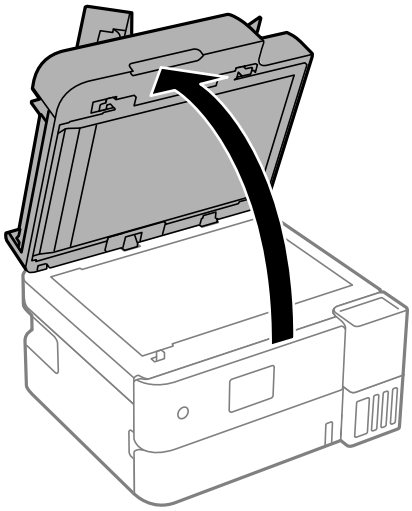

4. Release both tabs and remove the document mat.

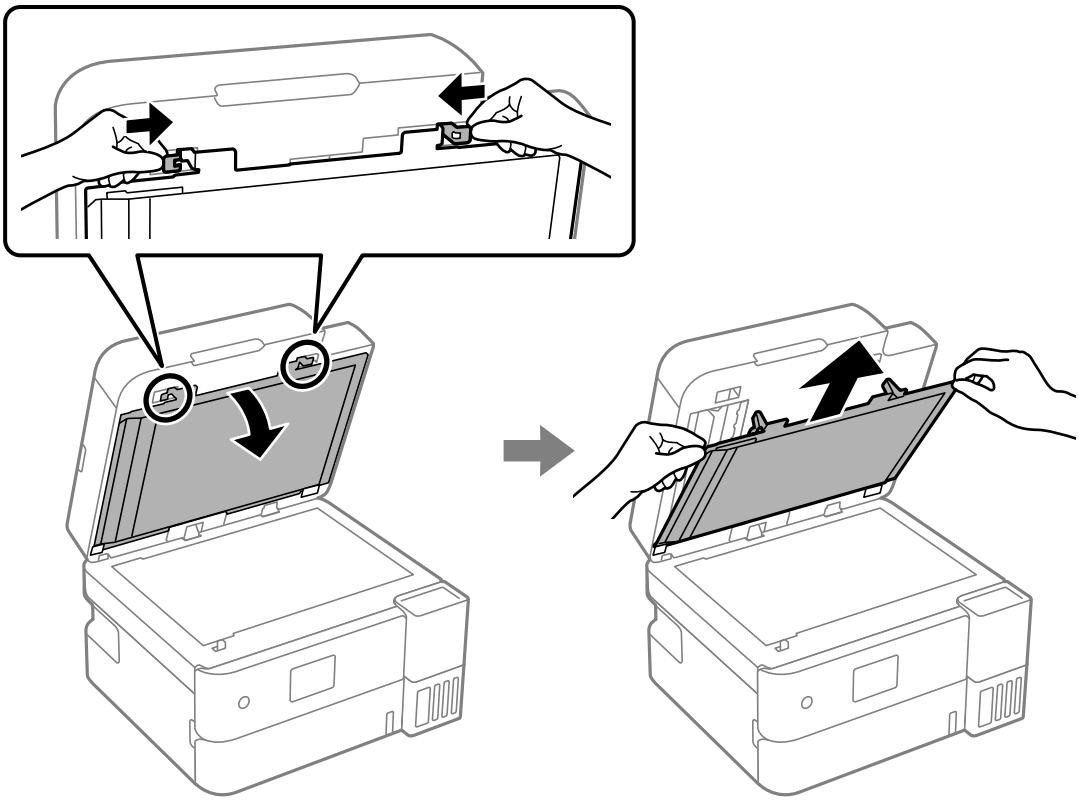

5. Remove the jammed paper.

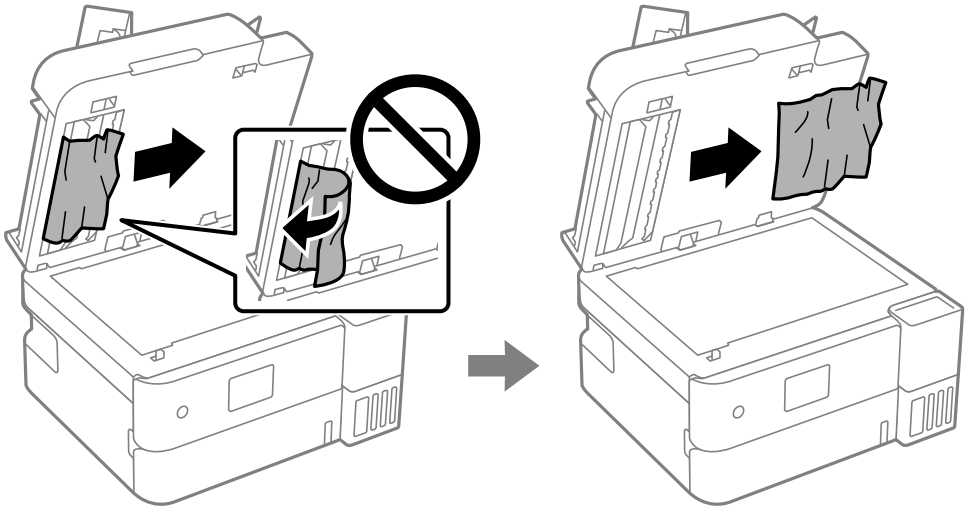

6. Reattach the document mat.

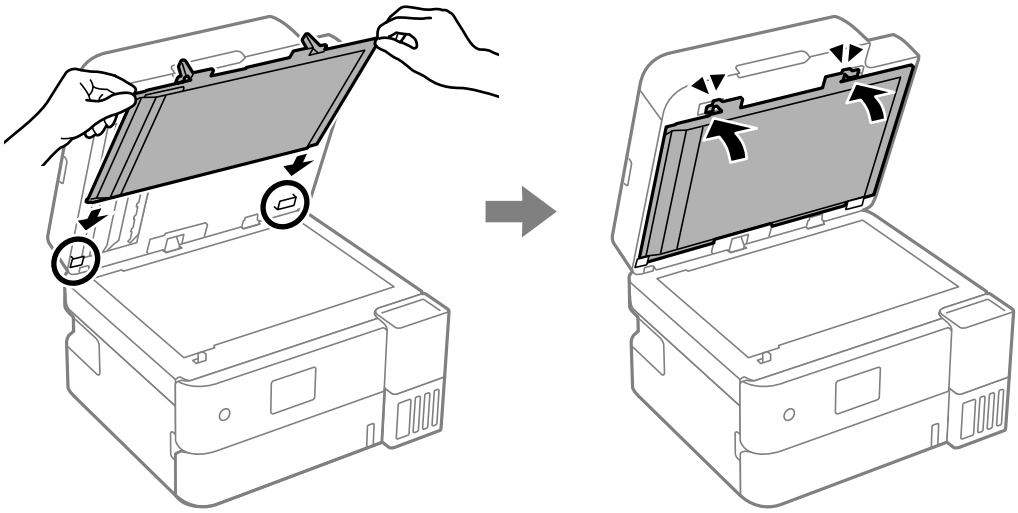

7. Close the document cover.

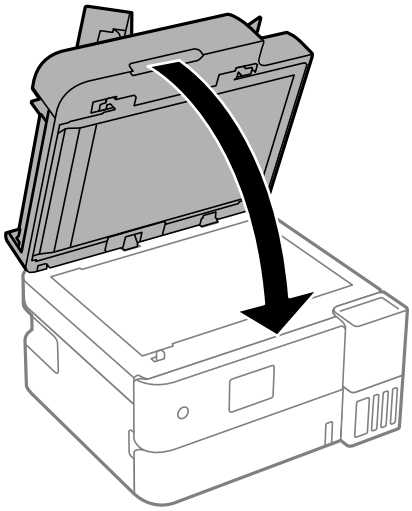

8. Close the ADF cover until it clicks.

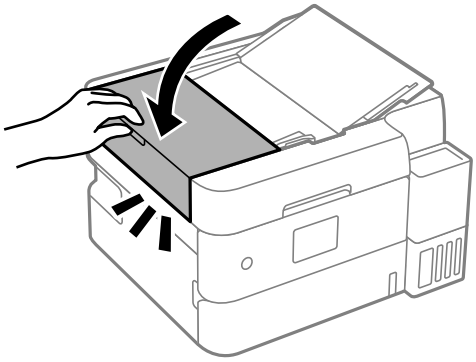

Preventing Paper Jams

Check the following if paper jams occur frequently.

- ❏ Place the printer on a flat surface and operate in the recommended environmental conditions.
  "Environmental Specifications" on page 205
- ❏ Use the paper supported by this printer.
  "Available Paper and Capacities" on page 179
- ❏ Follow paper handling precautions.
  "Paper Handling Precautions" on page 26
- ❏ Load paper in the correct direction, and slide the edge guide against the edge of the paper.
  "Loading Paper" on page 28
- ❏ Do not load more than the maximum number of sheets specified for paper.
  Remove any jammed documents.
- ❏ Reduce the amount of paper loaded.
- ❏ Load one sheet of paper at a time if you have loaded several sheets of paper.
- ❏ Make sure the paper size and paper type settings match the actual paper size and paper type loaded in the printer.
  "List of Paper Type" on page 27

It is Time to Refill the Ink

Ink Bottle Handling Precautions

Read the following instructions before refilling ink.

Storing precautions for ink

- ❏ Keep the ink bottles out of direct sunlight.
- ❏ Do not store the ink bottles in high or freezing temperatures.
- ❏ Epson recommends using the ink bottle before the date printed on the package.
- ❏ When storing or transporting an ink bottle, do not tilt the bottle and do not subject it to impacts or temperature changes. Otherwise, ink may leak even if the cap on the ink bottle is tightened securely. Be sure to keep the ink bottle upright when tightening the cap, and take precautions to prevent ink from leaking when transporting the bottle, for example, putting the bottle in a bag.
- ❏ After bringing an ink bottle inside from a cold storage site, allow it to warm up at room temperature for at least three hours before using it.
- ❏ Do not open the ink bottle package until you are ready to fill the ink tank. The ink bottle is vacuum packed to maintain its reliability. If you leave an ink bottle unpacked for a long time before using it, normal printing may not be possible.
- ❏ Once you open an ink bottle, we recommend using it as soon as possible.

Handling precautions for refilling ink

- ❏ To ensure you receive premium print quality and to help protect your print head, a variable ink safety reserve remains in the ink tank when your printer indicates to refill ink. The yields quoted for you do not include this reserve.
- ❏ For optimum print results do not maintain low ink levels for extended periods of time.
- ❏ Use ink bottles with the correct part code for this printer.
- ❏ The ink for this printer must be handled carefully. Ink may splatter when the ink tanks are being filled or refilled with ink. If ink gets on your clothes or belongings, it may not come off.
- ❏ Do not shake too vigorously or squeeze the ink bottles.
- ❏ Prolonged use of the printer when the ink level is below the lower line could damage the printer. Fill the ink tank to the upper line while the printer is not operating. To display the correct ink level estimates, reset the ink level after filling the tank.
- ❏ To obtain optimum printing results, refill the ink tanks to the upper line at least once every year.

Ink consumption

- ❏ To maintain optimum print head performance, some ink is consumed from all ink tanks during maintenance operations such as print head cleaning. Ink may also be consumed when you turn the printer on.
- ❏ When printing in monochrome or grayscale, color inks instead of black ink may be used depending on the paper type or print quality settings. This is because a mixture of color inks is used to create black.
- ❏ The ink in the ink bottles supplied with your printer is partly used during initial setup. In order to produce high quality printouts, the print head in your printer will be fully charged with ink. This one-off process consumes a quantity of ink and therefore these bottles may print fewer pages compared to subsequent ink bottles.
- ❏ Quoted yields may vary depending on the images that you are printing, the paper type that you are using, the frequency of your prints and environmental conditions such as temperature.
- ❏ Visually check ink levels in the actual ink tanks. Prolonged use of the printer when the ink is expended could damage the printer. Epson recommends filling the ink tank to the upper line when the printer is not operating to reset the ink level.

Refilling the Ink Tank

1. Select **Maintenance** on the printer's control panel.

   Read all of the usage precautions for filling ink on the screen, and then proceed to the next screen.

2. Select **Fill Ink**.

3. Close the document cover if it is open.

4. Open the ink tank cover.

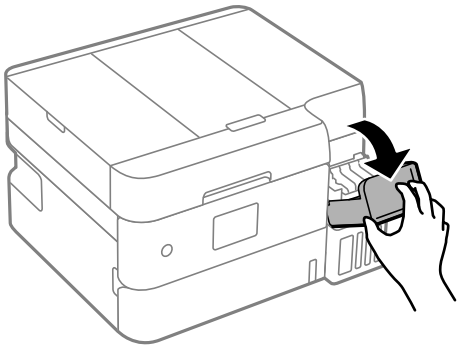

5. Open the cap of the ink tank.

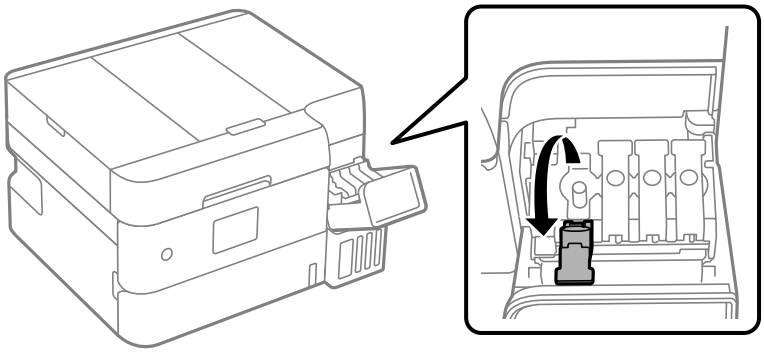

> ***Important:***
> *Make sure that the color of the ink tank matches the ink color that you want to refill.*

6. While holding the ink bottle upright, turn the cap slowly to remove it.

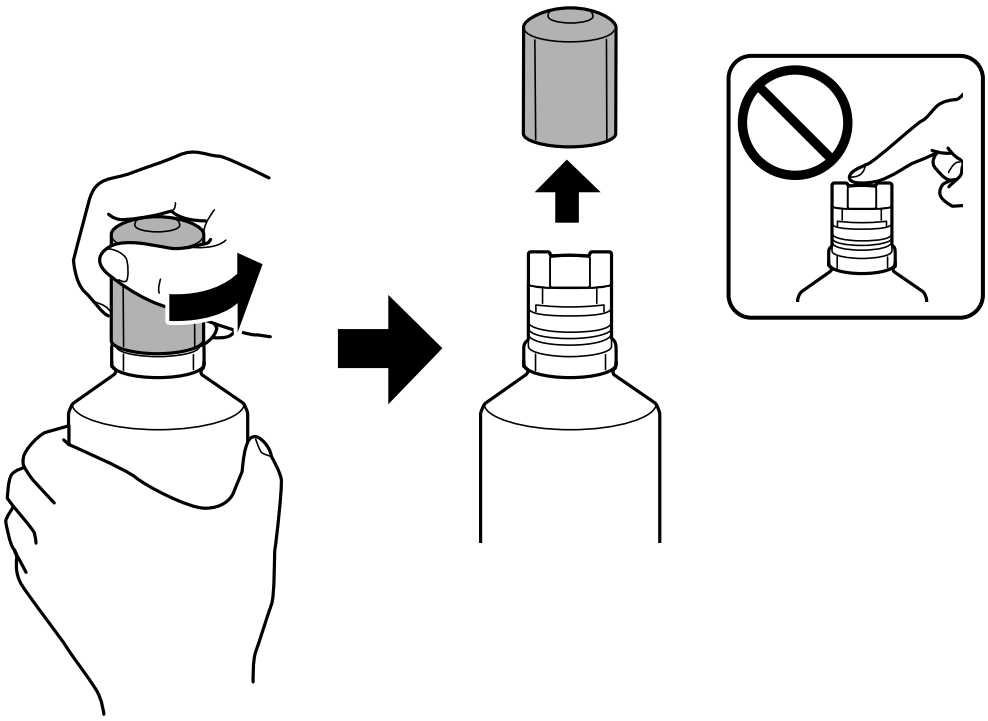

Important:

- *Epson recommends the use of genuine Epson ink bottles.*
- *Be careful not to spill any ink.*
- *Do not touch the top of the ink bottle after removing the cap; otherwise you may be smeared with ink.*

7. Check the upper line (a) in the ink tank.

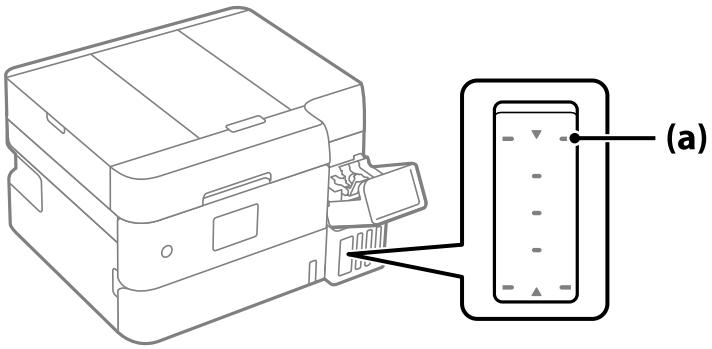

8. Align the top of the ink bottle with the filling port, and then insert it straight into the port to fill ink until it stops automatically at the upper line.

   When you insert the ink bottle into the filling port for the correct color, ink starts pouring and the flow stops automatically when the ink reaches the upper line.

   If the ink does not start flowing into the tank, remove the ink bottle and reinsert it.

However, do not remove and reinsert the ink bottle when the ink has reached the upper line; otherwise ink may leak or the printer may be damaged if the ink rises above the upper line.

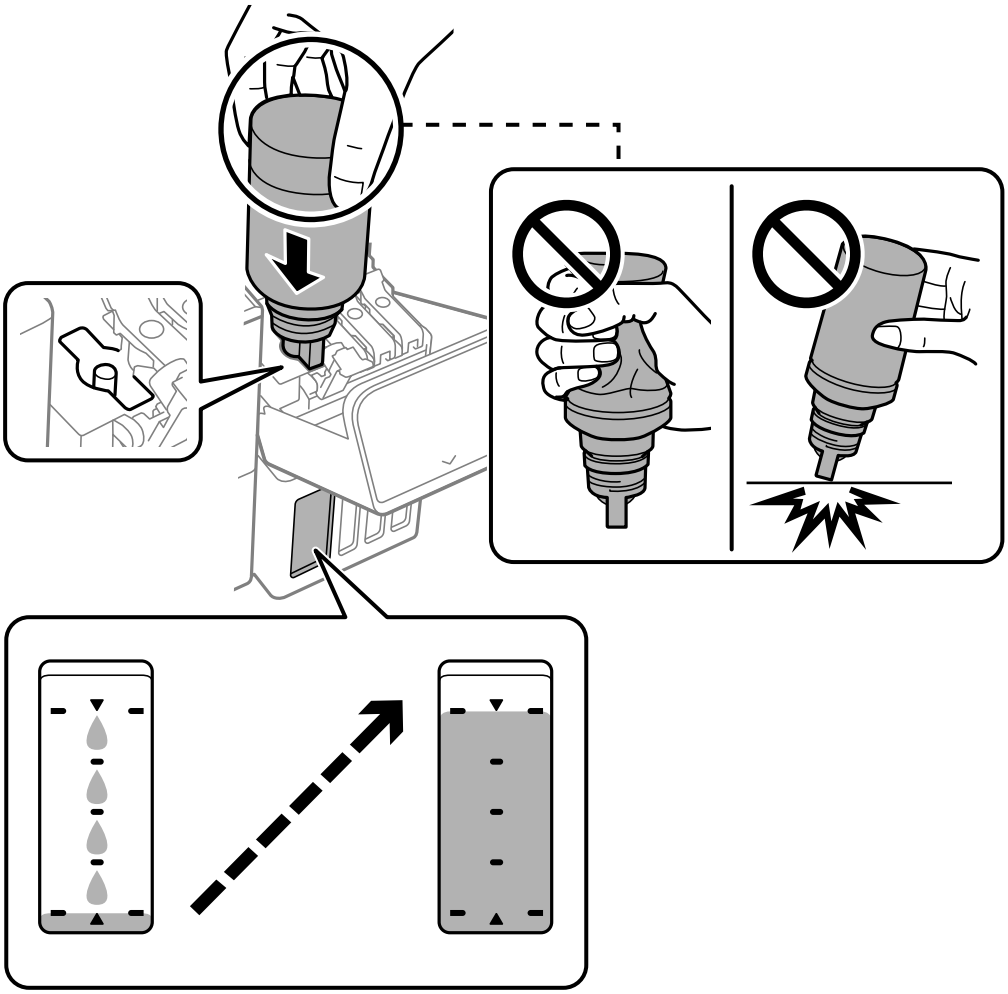

9. When you have finished filling the ink, remove the ink bottle.

> ***Important:***
> *Do not leave the ink bottle inserted; otherwise the bottle may be damaged or ink may leak.*

Note:
If any ink remains in the ink bottle, tighten the cap and store the bottle upright for later use.

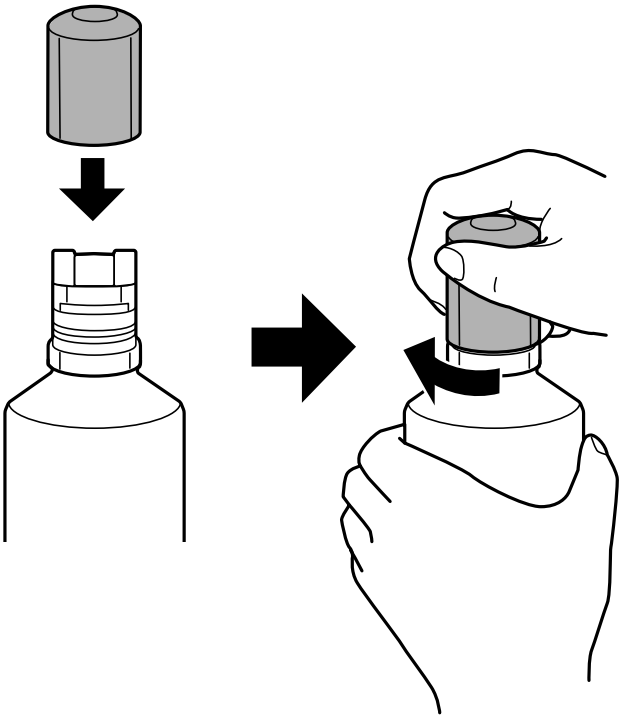

10. Close the ink tank cap securely.

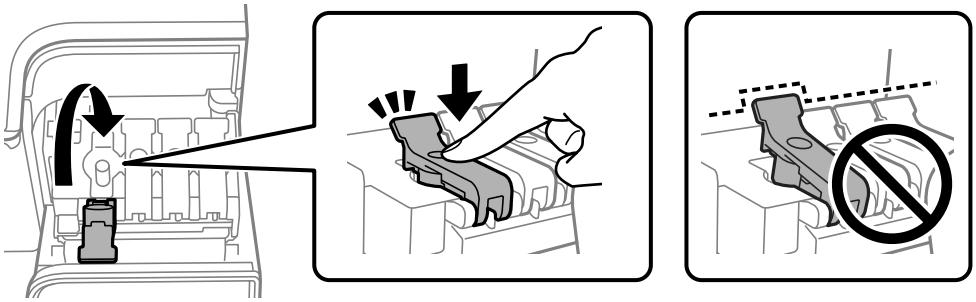

11. Close the ink tank cover firmly.

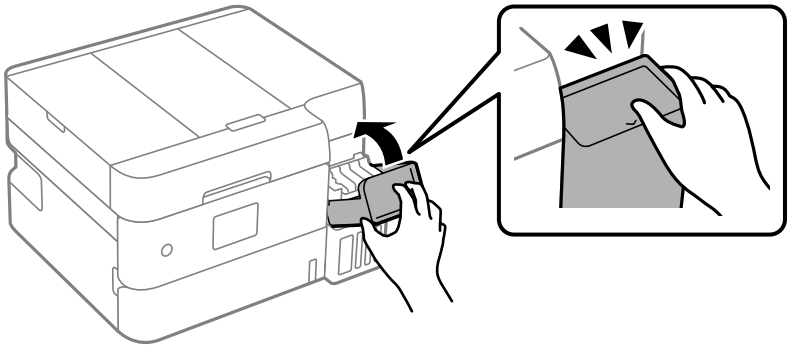

12. Follow the on-screen instructions to set the ink level of the color of the ink you refilled.

> **Important:**
> *Even if you do not refill ink up to the upper line on the ink tank, you can continue using the printer. To keep your printer operating at its best, however, fill ink tank up to the upper line and reset the ink level immediately.*

Related Information

➡ "Ink Bottle Handling Precautions" on page 164
➡ "Ink Bottle Codes" on page 182

Notes on Resetting the Ink Level

Be sure to reset the ink level after refilling the ink.

If you refilled two or more ink tanks, you need to select all of the tanks that you refilled and reset their ink levels.

Unless you reset the ink level, the ink level displayed does not change even after refilling the ink.

Related Information

➡ "Checking the Ink Level" on page 77

It is Time to Replace the Maintenance Box

Maintenance Box Handling Precautions

Read the following instructions before replacing the maintenance box.

❏ Do not touch the sections shown in the illustration. Doing so may prevent normal operation and you may get smeared with ink.

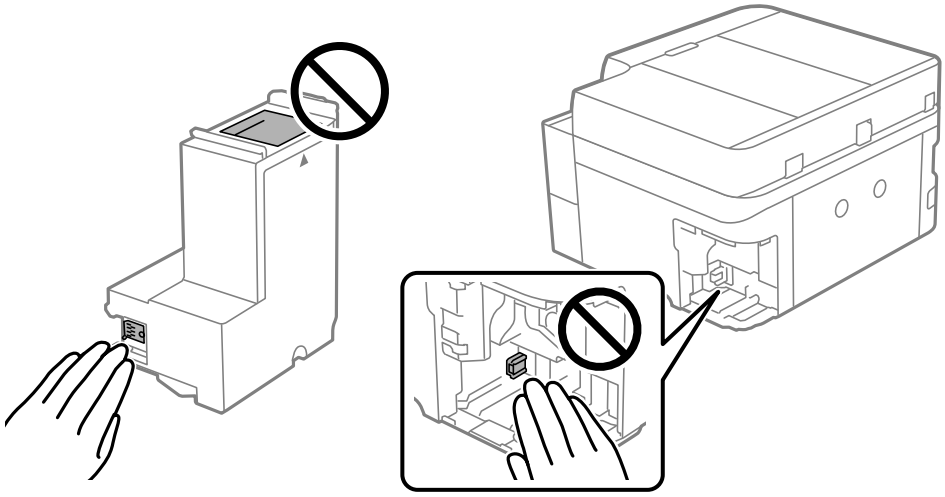

❏ Do not drop the maintenance box or subject it to strong shocks.

❏ Do not replace the maintenance box during printing; otherwise, ink may leak.

- ❏ Do not remove the maintenance box and its cover except when replacing the maintenance box; otherwise ink may leak.
- ❏ When the cover cannot be reattached, the maintenance box may not be installed correctly. Remove the maintenance box, and re-install it.
- ❏ Do not tilt the used maintenance box until after it is sealed in the plastic bag; otherwise ink may leak.
- ❏ Do not touch the openings in the maintenance box as you may get smeared with ink.
- ❏ Do not reuse a maintenance box which has been removed and left detached for a long period. Ink inside the box will have solidified and no more ink can be absorbed.
- ❏ Keep the maintenance box out of direct sunlight.
- ❏ Do not store the maintenance box in high or freezing temperatures.

Replacing a Maintenance Box

In some print cycles a very small amount of surplus ink may be collected in the maintenance box. To prevent ink leakage from the maintenance box, the printer is designed to stop printing when the absorbing capacity of the maintenance box has reached its limit. Whether and how often this is required will vary according to the number of pages you print, the type of material that you print and the number of cleaning cycles that the printer performs.

When a message is displayed prompting you to replace the maintenance box, refer to the animations displayed on the control panel. The need for replacement of the box does not mean that your printer has ceased to operate in accordance with its specifications. The Epson warranty does not cover the cost of this replacement. It is a user-serviceable part.

Note:

- *When the maintenance box is full, you cannot print and clean the print head until it is replaced to avoid ink leakage. However, you can perform operations that do not use ink such as scanning.*
- *When the following screen is displayed, the part cannot be replaced by users. Contact Epson support.*

  Borderless printing is not available, but printing with a border is available.

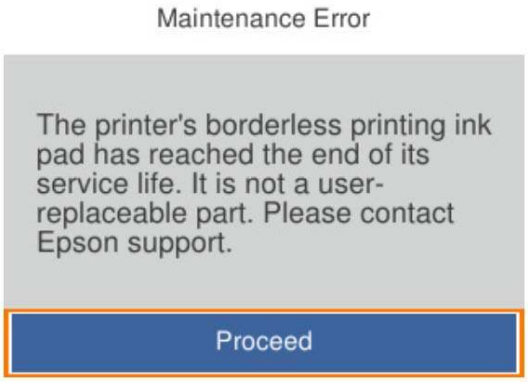

Related Information

➡ "Maintenance Box Handling Precautions" on page 170
➡ "Maintenance Box Code" on page 183

Cannot Operate the Printer as Expected

The Printer Does Not Turn On or Off

Power Does Not Turn On

One of the following situations may be the cause.

The power cord is not properly plugged into the electrical outlet.

Solutions

Make sure the power cord is securely plugged in.

The ⏻ button was not pressed for long enough.

Solutions

Hold down the ⏻ button for a little longer.

Power Does Not Turn Off

The ⏻ button was not pressedfor long enough.

Solutions

Hold down the ⏻ button for a little longer. If you still cannot turn off the printer, unplug the power cord. Then plug the power cord back in and turn the printer back on and off by pressing the ⏻ button, in order avoid drying out the print head.

Power Turns Off Automatically

The Power Off Settings or Power Off Timer feature is enabled.

Solutions

- Select **Settings** > **General Settings** > **Basic Settings** > **Power Off Settings**, and then disable the **Power Off If Inactive** and **Power Off If Disconnected** settings.
- Select **Settings** > **General Settings** > **Basic Settings**, and then disable the **Power Off Timer** Setting.

Note:
*Your product may have the **Power Off Settings** or **Power Off Timer** feature depending on the location of purchase.*

Operations are Slow

Printing Is Too Slow

One of the following situations may be the cause.

Unnecessary applications are running.

Solutions

Close any unnecessary applications on your computer or mobile devices.

The print quality setting is too high.

Solutions

Lower the quality setting.

Bidirectional printing is disabled.

Solutions

Enable the bidirectional (or high speed) setting. When this setting is enabled, the print head prints while moving in both directions, and the printing speed increases.

- Windows

  Select **Bidirectional Printing** on the printer driver's **More Options** tab.

❏ Mac OS

Select **System Preferences** from the Apple menu > **Printers & Scanners** (or **Print & Scan**, **Print & Fax**), and then select the printer. Click **Options & Supplies** > **Options** (or **Driver**). Select On as the **Bidirectional Printing** setting.

Quiet Mode is enabled.

Solutions

Disable **Quiet Mode**. The printing speed slows down when the printer is running in **Quiet Mode**.

❏ Control panel

Select on the home screen, and then select **Off**.

❏ Windows

Select **Off** as the **Quiet Mode** setting on the printer driver's **Main** tab.

❏ Mac OS

Select **System Preferences** from the Apple menu > **Printers & Scanners** (or **Print & Scan**, **Print & Fax**), and then select the printer. Click **Options & Supplies** > **Options** (or **Driver**). Select Off as the **Quiet Mode** setting.

There may be network connection problems with the wireless router.

Solutions

Reboot the wireless router while taking into consideration other users connected to the network. If this does not solve the problem, place the printer closer to your wireless router or see the documentation provided with the access point.

The printer is printing high density data such as photos on plain paper.

Solutions

If you are printing high-density data such as photos on plain paper, printing may take some time into maintain print quality. This is not a malfunction.

Printing Slows Down Dramatically During Continuous Printing

The printer has slowed down to prevent the printer mechanism from overheating and being damaged.

Solutions

You can continue printing. To return to normal printing speed, leave the printer idle for at least 30 minutes with the power turned on.

Scanning Speed Is Slow

The scanning resolution setting is too high.

Solutions

Try scanning at a lower resolution.

LCD Screen Gets Dark

The printer is in sleep mode.

Solutions

Press any button on the control panel to return the LCD screen to its former state.

The Printer Is Loud

Quiet Mode is disabled on the printer.

Solutions

If operations sounds are too loud, enable **Quiet Mode**. Enabling this feature may reduce printing speed.

❑ Control panel

Select on the home screen, and then enable **Quiet Mode**.

❑ Windows

Enable **Quiet Mode** on the printer driver's **Main** tab.

❑ Mac OS

Select **System Preferences** from the Apple menu > **Printers & Scanners** (or **Print & Scan**, **Print & Fax**), and then select the printer. Click **Options & Supplies** > **Options** (or **Driver**). Enable the **Quiet Mode** setting.

The Root Certificate Needs to be Updated

The root certificate has expired.

Solutions

Run Web Config, and then update the root certificate.

➡ "Application for Configuring Printer Operations (Web Config)" on page 186

Cannot Perform Manual 2-sided Printing (Windows)

EPSON Status Monitor 3 is disabled.

Solutions

On the printer driver's **Maintenance** tab, click **Extended Settings**, and then select **Enable EPSON Status Monitor 3**.

However, it may not be available when the printer is accessed over a network or is used as a shared printer.

The Print Settings Menu is Not Displayed (Mac OS)

The Epson Printer Driver has Not been Installed Correctly.

Solutions

If the **Print Settings** menu is not displayed on macOS Catalina (10.15) or later, macOS High Sierra (10.13), macOS Sierra (10.12), OS X El Capitan (10.11), OS X Yosemite (10.10), OS X Mavericks (10.9), the Epson printer driver has not been installed correctly. Enable it from the following menu.

Select **System Preferences** from the Apple menu > **Printers & Scanners** (or **Print & Scan**, **Print & Fax**), remove the printer, and then add the printer again.

macOS Mojave (10.14) cannot access **Print Settings** in applications made by Apple such as TextEdit.

A Message Prompting You to Reset the Ink Level is Displayed Even After Refilling the Ink

Ink level was not reset.

Solutions

After refilling the ink, follow the on-screen instructions to reset the ink level.

➡ "Notes on Resetting the Ink Level" on page 170

The Ink Level Display does not Change Even After Refilling the Ink

Ink level was not reset.

Solutions

After refilling the ink, follow the on-screen instructions to reset the ink level.

➡ "Notes on Resetting the Ink Level" on page 170

Cannot Solve Problem

If you cannot solve the problem after trying all of the solutions, contact Epson support.

If you cannot solve printing or copying problems, see the following related information.

Related Information

➡ "Cannot Solve Printing or Copying Problems" on page 176
➡ "Contacting Epson Support" on page 210

Cannot Solve Printing or Copying Problems

Try the solutions in the order shown, until you solve the problem.

- ❏ Make sure you match the paper type loaded in the printer and the paper type selected on the printer to the paper type setting in the printer driver.

  "Paper Size and Type Settings" on page 27

- ❏ Use a higher quality setting on the control panel or in the printer driver.
- ❏ To check the actual ink remaining, visually check the ink levels in the printer's tanks. Refill the ink tanks if the ink levels are below the lower lines.
- ❏ Align the print head.

  "Aligning the Print Head" on page 84

- ❏ Run a nozzle check to see if the print head nozzles are clogged.

  If there are missing segments in the nozzle check pattern, the nozzles may be clogged. Run a nozzle check and Cleaning alternately 3 times or Power Cleaning once, and check if the clogging has cleared.

  Note that print head cleaning uses some ink.

  If there are still missing segments in the nozzle check pattern, turn off the printer and wait for at least 12 hours without printing, and then run a nozzle check. If print quality has still not improved, run Cleaning and a nozzle check again. If it has still not improved, run Power Ink Flushing.

  "Checking and Cleaning the Print Head" on page 80

  "Running Power Cleaning" on page 82

  "Running Power Ink Flushing" on page 83

- ❏ If the problem is clogging, leaving the printer for a while without printing may solve the problem.

  You can check the following items while the printer is off.

- ❏ Make sure you are using genuine Epson ink bottles.

  Try to use genuine Epson ink bottles. This product is designed to adjust colors based on the use of genuine Epson ink bottles. The use of non-genuine ink bottles may cause print quality to decline.

- ❏ Make sure there are no paper fragments left inside the printer.

  When you remove the paper, do not touch the translucent film with your hand or the paper.

- ❏ Make sure the paper is loaded with the printable side facing up and not curled.

  "Paper Handling Precautions" on page 26

  "Available Paper and Capacities" on page 179

  "Unavailable Paper Types" on page 182

If you cannot solve the problem by checking the solutions above, contact Epson support.

Related Information

➡ "Before Contacting Epson" on page 210

➡ "Contacting Epson Support" on page 210

Product Information

Paper Information. 179

Consumable Products Information. 182

Software Information. 184

Settings Menu List. 187

Product Specifications. 196

Regulatory Information. 206

Nameplate. 208

Paper Information

Available Paper and Capacities

Genuine Epson Paper

Epson recommends using genuine Epson paper to ensure high-quality printouts.

Do not load more than the maximum number of sheets specified for the paper.

Note:

- *The availability of paper varies by location. For the latest information on paper available in your area, contact Epson support.*
- *See the following for information on available paper types for borderless and 2-sided printing.*

  "Paper for Borderless Printing" on page 181

  "Paper for 2-Sided Printing" on page 181
- *When printing on genuine Epson paper at a user defined size, only **Standard** or **Normal** print quality settings are available. Although some printer drivers allow you to select a better print quality, the printouts are printed using **Standard** or **Normal**.*

Paper suitable for printing documents

Media Name	Size	Loading Capacity (Sheets)
Epson Bright White Ink Jet Paper	A4	200

Paper suitable for printing documents and photos

Media Name	Size	Loading Capacity (Sheets)
Epson Photo Quality Ink Jet Paper	A4	100
Epson Double-sided Photo Quality Ink Jet Paper	A4	80
Epson Matte Paper-Heavyweight	A4	20
Epson Double-Sided Matte Paper	A4	1

Paper suitable for printing photos

Media Name	Size	Loading Capacity (Sheets)
Epson Ultra Glossy Photo Paper	A4, 10×15 cm (4×6 in), 13×18 cm (5×7 in)	20
Epson Premium Glossy Photo Paper	A4, 10×15 cm (4×6 in), 13×18 cm (5×7 in)	20
Epson Premium Semigloss Photo Paper	A4, 10×15 cm (4×6 in)	20

Media Name	Size	Loading Capacity (Sheets)
Epson Photo Paper Glossy	A4, 10×15 cm (4×6 in), 13×18 cm (5×7 in)	20

Various other paper types

Media Name	Size	Loading Capacity (Sheets)
Epson Photo Quality Self Adhesive Sheets	A4	1

Commercially Available Paper

Do not load more than the maximum number of sheets specified for the paper.

Note:
See the following for information on available paper types for borderless and 2-sided printing.

"Paper for Borderless Printing" on page 181

"Paper for 2-Sided Printing" on page 181

Plain papers

Plain paper includes copy paper and letterhead*1*2.

Size	Loading Capacity (Sheets)
A4, B5, 16K (195×270 mm), Letter, Legal	250
A6, A5, B6, Indian-Legal, 8.5×13 in	50
User Defined*3*4 (mm) 182×257 to 215.9×297	1
User Defined*3*4 (mm) 89×127 to 215.9×1200	1

*1 Paper on which information such as the sender's name or corporation name are pre-printed in the header. There must be a margin of 5 mm or more at the top of the paper.

*2 Borderless printing and 2-sided printing are not available for letterhead paper.

*3 Copying or printing from the control panel is not available.

*4 Letterhead is not available.

Envelope*

Size	Loading Capacity (Envelopes)
Envelope #10, Envelope DL, Envelope C6	10

* Only the address side is available.

Paper for Borderless Printing

Genuine Epson Paper

- ❏ Epson Photo Quality Ink Jet Paper
- ❏ Epson Bright White Ink Jet Paper
- ❏ Epson Double-sided Photo Quality Ink Jet Paper
- ❏ Epson Ultra Glossy Photo Paper
- ❏ Epson Premium Glossy Photo Paper
- ❏ Epson Premium Semigloss Photo Paper
- ❏ Epson Photo Paper Glossy
- ❏ Epson Matte Paper-Heavyweight
- ❏ Epson Double-Sided Matte Paper
- ❏ Epson Photo Quality Self Adhesive Sheets

Related Information

➡ "Available Paper and Capacities" on page 179

Commercially Available Paper

Plain paper*, copy paper*

* For borderless printing, you can use A4 and Letter sizes.

Related Information

➡ "Available Paper and Capacities" on page 179

Paper for 2-Sided Printing

Genuine Epson Paper

- ❏ Epson Bright White Ink Jet Paper
- ❏ Epson Double-sided Photo Quality Ink Jet Paper*
- ❏ Epson Double-Sided Matte Paper*

* Manual 2-sided printing only.

Related Information

➡ "Available Paper and Capacities" on page 179

Commercially Available Paper

- ❏ Plain paper*1

❏ Copy paper*1

❏ Letterhead*2

*1 You can only perform manual 2-sided printing for A6, A5, B6, Indian-Legal, 8.5×13 in, Legal, and User Defined.

*2 Manual 2-sided printing only.

Related Information

➡ "Available Paper and Capacities" on page 179

Unavailable Paper Types

Do not use the following paper types. Using these types of paper can cause paper feed problems and smears on the printouts.

❏ Papers that are wavy

❏ Papers that are torn or cut

❏ Papers that are folded

❏ Papers that are damp

❏ Papers that are too thick or too thin

❏ Papers that have stickers

Do not use the following envelopes. Using these types of envelope causes paper jams and smears on the printout.

❏ Envelopes that are curled or folded

❏ Envelopes with adhesive surfaces on the flaps or window envelopes

❏ Envelopes that are too thin
They may curl during printing.

Consumable Products Information

Ink Bottle Codes

Epson recommends the use of genuine Epson ink bottles.

The following are the codes for genuine Epson ink bottles.

Important:

❏ *Epson warranty does not cover damage caused by inks other than those specified, including any genuine Epson ink not designed for this printer or any third party ink.*

❏ *Other products not manufactured by Epson may cause damage that is not covered by Epson's warranties, and under certain circumstances, may cause erratic printer behavior.*

Note:
- *Ink bottle codes may vary by location. For the correct codes in your area, contact Epson support.*
- *Although the ink bottles may contain recycled materials, this does not affect printer function or performance.*
- *Specifications and appearance of the ink bottle are subject to change without prior notice for improvement.*

For Europe

Product	BK: Black	C: Cyan	M: Magenta	Y: Yellow
ET-3950 Series	102	102	102	102
L6370 Series/L6360 Series	101	101	101	101

Note:
For users in Europe, visit the following website for information on Epson's ink bottle yields.

http://www.epson.eu/pageyield

For Australia and New Zealand

BK: Black	C: Cyan	M: Magenta	Y: Yellow
502	502	502	502

For Asian countries except for China

BK: Black	C: Cyan	M: Magenta	Y: Yellow
001	001	001	001

Note:
Not all ink bottles are available in all regions.

For China

BK: Black	C: Cyan	M: Magenta	Y: Yellow
066	066	066	066

Maintenance Box Code

Epson recommends the use of a genuine Epson maintenance box.

Maintenance box code: T04D1

Important:
Once a maintenance box has been installed in a printer it cannot be used with other printers.

Software Information

This section introduces some of the applications available for your printer. For a list of supported software, see the following Epson website or launch Epson Software Updater for confirmation. You can download the latest applications.

https://www.epson.com

Related Information

➡ "Application for Updating Software and Firmware (Epson Software Updater)" on page 187

Application for Printing from a Computer (Windows Printer Driver)

The printer driver controls the printer based on the commands from an application. Selecting settings in the printer driver provides the best printing results. You can also check the status of the printer or keep it in top operating condition using the printer driver utility.

Note:
You can change the language of the printer driver. Select the language you want to use from the ***Language*** *setting on the* ***Maintenance*** *tab.*

Accessing the printer driver from applications

To select settings that apply only to the application you are using, access the driver from that application.

Select **Print** or **Print Setup** from the **File** menu. Select your printer, and then click **Preferences** or **Properties**.

Note:
Operations differ depending on the application. See the application's help for details.

Accessing the printer driver from the control panel and so on

To select settings that apply to all of the applications, follow the steps below.

❑ Windows 11

Click on the start button, and then select **Settings** > **Bluetooth & devices** > **Printers & scanners**. Click your printer, and then select **Printing preferences**.

❑ Windows 10/Windows Server 2022/Windows Server 2019/Windows Server 2016

Click on the start button, and then select **Windows System** > **Control Panel** > **View devices and printers** in **Hardware and Sound**. Right-click on your printer, or press and hold it and then select **Printing preferences**.

❑ Windows 8.1/Windows 8/Windows Server 2012 R2/Windows Server 2012

Select **Desktop** > **Settings** > **Control Panel** > **View devices and printers** in **Hardware and Sound**. Right-click on your printer, or press and hold it and then select **Printing preferences**.

❑ Windows 7/Windows Server 2008 R2

Click the start button, and select **Control Panel** > **View devices and printers** in **Hardware and Sound**. Right-click on your printer and select **Printing preferences**.

❑ Windows Server 2008

Click the start button, and select **Control Panel** > **Printers** in **Hardware and Sound**. Right-click on your printer and select **Printing preferences**.

Accessing the printer driver from the printer icon on the task bar

The printer icon on the desktop task bar is a shortcut icon allowing you to quickly access the printer driver.

If you click the printer icon and select **Printer Settings**, you can access the same printer settings window as the one displayed from the control panel. If you double-click this icon, you can check the status of the printer.

Note:
*If the printer icon is not displayed on the task bar, access the printer driver window, click **Monitoring Preferences** on the **Maintenance** tab, and then select **Register the shortcut icon to the taskbar**.*

Starting the utility

Access the printer driver window. Click the **Maintenance** tab.

Application for Printing from a Computer (Mac OS Printer Driver)

The printer driver controls the printer according to the commands from an application. Making settings on the printer driver provides the best printing results. You can also check the status of the printer or keep it in top operating condition using the printer driver utility.

Accessing the printer driver from applications

Click **Page Setup** or **Print** on the **File** menu of your application. If necessary, click **Show Details** (or ▼) to expand the print window.

Note:
*Depending on the application being used, **Page Setup** may not be displayed in the **File** menu, and the operations for displaying the print screen may differ.See the application's help for details.*

Starting the utility

Select **System Preferences** from the Apple menu > **Printers & Scanners** (or **Print & Scan**, **Print & Fax**), and then select the printer. Click **Options & Supplies** > **Utility** > **Open Printer Utility**.

Application for Controlling the Scanner (Epson Scan 2)

Epson Scan 2 is a scanner driver that allows you to control the scanner. You can adjust the size, resolution, brightness, contrast, and quality of the scanned image. You can also start this application from a TWAIN-compliant scanning application. See the software help for details on using the features.

Starting on Windows

Note:
*For Windows Server operating systems, make sure the **Desktop Experience** feature is installed.*

- ❏ Windows 11

  Click the start button, and then select **All apps** > **EPSON** > **Epson Scan 2**.

- ❏ Windows 10/Windows Server 2022/Windows Server 2019/Windows Server 2016

  Click the start button, and then select **EPSON** > **Epson Scan 2**.

- ❏ Windows 8.1/Windows 8/Windows Server 2012 R2/Windows Server 2012

  Enter the application name in the search charm, and then select the displayed icon.

❏ Windows 7/Windows Server 2008 R2/Windows Server 2008

Click the start button, and then select **All Programs** > **EPSON** > **Epson Scan 2**.

Starting on Mac OS

Select **Go** > **Applications** > **Epson Software** > **Epson Scan 2**.

Application for Configuring Printer Operations (Web Config)

Web Config is an application that runs in a web browser, such as Microsoft Edge and Safari, on a computer or mobile device. You can confirm the printer status or change the network service and printer settings. To use Web Config, connect the printer and the computer or device to the same network.

The following browsers are supported. Use the latest version.

Microsoft Edge, Firefox, Chrome, Safari

Note:
You may be asked to enter the administrator password while using Web Config. See the related information below for more details.

Related Information

➡ "Default Value of the Administrator Password" on page 15

Running Web Config on a Web Browser

1. Check the printer's IP address.

   Select the network icon on the printer's home screen, and then select the active connection method to confirm the printer's IP address.

   To select an item, use the ▲ ▼ ◀ ▶ buttons, and then press the OK button.

   Note:
   You can also check the IP address by printing the network connection report.

2. Launch a Web browser from a computer or mobile device, and then enter the printer's IP address.

   Format:

   IPv4: http://the printer's IP address/

   IPv6: http://[the printer's IP address]/

   Examples:

   IPv4: http://192.168.100.201/

   IPv6: http://[2001:db8::1000:1]/

   Note:
   If you are using a the mobile devices, you can also run Web Config from the product information screen of the Epson Smart Panel app.

   Since the printer uses a self-signed certificate when accessing HTTPS, a warning is displayed on the browser when you start Web Config; this does not indicate a problem and can be safely ignored.

Application for Updating Software and Firmware (Epson Software Updater)

Epson Software Updater is an application that installs new software, and updates firmware over the Internet. If you want to check for update information regularly, you can set the interval for checking for updates in Epson Software Updater's Auto Update Settings.

Note:
Windows Server operating systems are not supported.

Starting on Windows

❏ Windows 11

Click the start button, and then select **All apps** > **EPSON Software** > **Epson Software Updater**.

❏ Windows 10

Click the start button, and then select **EPSON Software** > **Epson Software Updater**.

❏ Windows 8.1/Windows 8

Enter the application name in the search charm, and then select the displayed icon.

❏ Windows 7

Click the start button, and then select **All Programs** > **EPSON Software** > **Epson Software Updater**.

Note:
You can also start Epson Software Updater by clicking the printer icon on the task bar on the desktop, and then selecting ***Software Update****.*

Starting on Mac OS

Select **Go** > **Applications** > **Epson Software** > **Epson Software Updater**.

Related Information

➡ "Installing the Applications Separately" on page 98

Settings Menu List

Select **Settings** on the home screen of the printer to make various settings.

General Settings

Select the menus on the control panel as described below.

Settings > **General Settings**

Basic Settings

Select the menus on the control panel as described below.

Settings > **General Settings** > **Basic Settings**

LCD Brightness:

Adjust the brightness of the LCD screen.

Sleep Timer:

Adjust the time period to enter a sleep mode (energy saving mode) when the printer has not performed any operations. The LCD screen turns black when the setting time passes.

Auto Power On:

Select **On** to turn on the printer automatically when it receives a print or scan job over a USB-connection or a network connection.

Enabling **Auto Power On** increases power consumption slightly in standby status compared to turning the printer off completely. Also, it takes longer to turn off the power. Leave the power cord plugged in when using this feature. If you unplug the power cord, make sure the power light is off.

Use the **Power Off Timer** setting if you want the printer to automatically turn off when the print or scan job is finished and a set time period has passed with no operations performed. This is useful when printing from a remote location such as over the Internet.

Power Off Timer:

Your product may have this feature or the **Power Off Settings** feature depending on the location of purchase.

Select this setting to turn the printer off automatically when it is not used for a specified period of time. You can adjust the time before power management is applied. Any increase will affect the product's energy efficiency. Please consider the environment before making any change.

Power Off Settings:

Your product may have this feature or the **Power Off Timer** feature depending on the location of purchase.

Power Off If Inactive:

Select this setting to turn the printer off automatically if it is not used for a specified period of time. You can adjust the time before power management is applied. Any increase will affect the product's energy efficiency. Please consider the environment before making any change.

Power Off If Disconnected:

Select this setting to turn the printer off after a specified period of time when all ports including the USB port are disconnected. This feature may not be available depending on your region.

See the following website for the specified period of time.

https://www.epson.eu/energy-consumption

Language:

Select the language used on the LCD screen.

Operation Time Out:

Select **On** to return to the initial screen when no operations have been performed for the specified time.

Keyboard:

Change the layout of the keyboard on the LCD screen.

Status Light:

Adjusts the brightness of the **Status Light**. When set to minimum, the **Status Light** is off.

Printer Settings

Select the menus on the control panel as described below.

Settings > **General Settings** > **Printer Settings**

Paper Source Setting:

Paper Setting:

Select the paper size and paper type you loaded in the paper source. You can make **Favorite Paper Settings** in paper size and paper type.

A4/Letter Auto Switching:

Select **On** to feed paper from the paper source set as A4 size when there is no paper source set as Letter, or feed from the paper source set as Letter size when there is no paper source set as A4.

Error Notice:

Paper Size Notice:

Select **On** to display an error message when the selected paper size does not match the loaded paper.

Paper Type Notice:

Select **On** to display an error message when the selected paper type does not match the loaded paper.

Paper Setup Auto Display:

Select **On** to display the **Paper Setting** screen when loading paper in the paper source. If you disable this feature, you cannot print from an iPhone, iPad, or iPod touch using AirPrint.

Universal Print Settings:

These print settings are applied when you print by an external device without using the printer driver. The offset settings are applied when you print using the printer driver.

Top Offset:

Adjust the top margin of the paper.

Left Offset:

Adjust the left margin of the paper.

Top Offset in Back:

Adjust the top margin for the back of the page when performing 2-sided printing.

Left Offset in Back:

Adjust the left margin for the back of the page when performing 2-sided printing.

Check Paper Width:

Select **On** to check the paper width before printing. This prevents printing beyond the edges of the paper when the paper size setting is incorrect, but this may lower the print speed.

Skip Blank Page:

Skips blank pages in the print data automatically to save paper.

Auto Error Solver:

Select an action to perform when a 2-sided printing error or a memory full error occurs.

❑ On

Displays a warning and prints in single-sided mode when a 2-sided printing error occurs, or prints only what the printer could process when a memory full error occurs.

❑ Off

Displays an error message and cancels printing.

Quiet Mode:

Select **On** to reduce noise during printing, however, this may lower the print speed. Depending on the paper type and print quality settings you selected, there may be no difference in the printer's noise level. Select **On** to prioritize reducing operation noise. To prioritize printing speed, select **On (Low Level)**.

Ink Drying Time:

Select the ink drying time you want to use when performing 2-sided printing. After the printer prints on one side, it waits a little while for it to dry before printing on the other side. If your printout is smeared, increase the time setting.

PC Connection via USB:

Select **Enable** to allow a computer to access the printer when connected by USB. When **Disable** is selected, printing and scanning that is not sent over a network connection is restricted.

Related Information

➡ "Saving Power" on page 96

Network Settings

Select the menus on the control panel as described below.

Settings > **General Settings** > **Network Settings**

Connection Settings:

Connect the printer to the network over a wireless LAN. Select your connection method and follow the on-screen instructions.

Wi-Fi:

Wi-Fi Setup Wizard:

Configures Wi-Fi settings by having you enter the SSID and password.

Push Button Setup (WPS):

Makes Wi-Fi settings by Push Button Setup (WPS).

Others:

PIN Code Setup (WPS):

Configures Wi-Fi settings via PIN Code Setup (WPS).

Disable Wi-Fi:

Disconnects the connection to the Wi-Fi router.

Ethernet:

Set up or change a network connection that uses a LAN cable and hub. When this is being used, Wi-Fi connections are disabled.

Wi-Fi Direct:

(Menu) :

Change Network Name:

Changes the Wi-Fi Direct SSID (network name).

Change Password:

Changes the password for the Wi-Fi Direct connection.

Change Frequency Range:

Select the frequency band for Wi-Fi Direct connection. Changing the frequency disconnects the connected device.

The availability of these channels and use of the product outdoors over these channels varies by location.

http://support.epson.net/wifi5ghz/

Disable Wi-Fi Direct:

Disables the Wi-Fi Direct function.

Restore Default Settings:

Resets the Wi-Fi Direct settings.

Other Methods:

iOS:

Displays a QR code to connect a mobile device using Wi-Fi Direct.

Android:

Displays a QR code to connect a mobile device using Wi-Fi Direct.

Other OS Devices:

Displays the SSID and password to connect using Wi-Fi Direct.

Easy Connect with App:

Establish a wireless LAN connection using the wireless LAN information for your computer or mobile device.

Network Status:

Wired LAN/Wi-Fi Status:

Displays the printer's network information.

Wi-Fi Direct Status:

Displays the Wi-Fi Direct setting information.

Print Status Sheet:

Prints a network status sheet.

The information for Ethernet, Wi-Fi, Wi-Fi Direct, and other network parameters is printed on two or more pages.

Connection Check:

Checks the current network connection and prints a report. If there are any problems with the connection, see the report for solutions.

Advanced:

Device Name:

Changes the device name to any name within 2 to 53 characters.

TCP/IP:

Configures the IP settings, if the IP address is static.

For automatic configuration, use the IP address assigned by DHCP.

To set manually, switch to **Manual** and then enter the IP address you want to assign.

Proxy Server:

Set this if you are using a proxy server in your network environment and want to set it for the printer as well.

IPv6 Address:

Sets whether or not to enable IPv6 addressing.

Link Speed & Duplex:

Select an appropriate Ethernet speed and duplex setting. If you select a setting other than Auto, make sure the setting corresponds to the settings on the hub you are using.

Related Information

➡ "Configuring Wi-Fi Settings from the Control Panel" on page 101
➡ "Connecting a Device and Printer Directly (Wi-Fi Direct)" on page 111

Web Service Settings

Select the menus on the control panel as described below.

Settings > **General Settings** > **Web Service Settings**

Epson Connect Services:

Displays whether the printer is registered and connected to Epson Connect.

You can register to the service by selecting **Register** and follow the instructions.

For usage guides, see the following portal website.

https://www.epsonconnect.com/

http://www.epsonconnect.eu (Europe only)

When you have registered, you can change the following settings.

Suspend/Resume:

Select whether to suspend or resume Epson Connect services.

Unregister:

Unregisters the printer from Epson Connect services.

Maintenance

Select the menus on the control panel as described below.

Settings > **Maintenance**

Print Quality Adjustment:

Select this feature if there are any problems with your printouts. You can check for clogged nozzles and clean the print head if necessary, and then adjust some parameters to improve print quality.

Print Head Nozzle Check:

Select this feature to check if the print head nozzles are clogged. The printer prints a nozzle check pattern.

Print Head Cleaning:

Select this feature to clean clogged nozzles in the print head.

Power Ink Flushing:

The **Power Ink Flushing** utility allows you to replace all of the ink inside the ink tubes.

Print Head Alignment:

Ruled Line Alignment:

Select this feature to align vertical lines.

Horizontal Alignment:

Select this feature if horizontal banding appears at regular intervals in your printouts.

Fill Ink:

Select this feature to reset the ink level to 100% when filling the ink tank.

Ink Level Setting:

Select this feature to set the ink level according to the actual ink remaining.

Remaining capacity of Maintenance box:

Displays the approximate service life of the maintenance box. When is displayed, the maintenance box is nearly full. When is displayed, the maintenance box is full.

Paper Guide Cleaning:

Select this feature if there are ink stains on the internal rollers. The printer feeds paper to clean the internal rollers.

Related Information

➡ "Checking and Cleaning the Print Head" on page 80
➡ "Running Power Ink Flushing" on page 83
➡ "Refilling the Ink Tank" on page 165
➡ "Cleaning the Paper Path for Ink Smears" on page 84

Print Status Sheet

Select the menus on the control panel as described below.

Settings > **Print Status Sheet**

Configuration Status Sheet:

Print information sheets showing the current printer status and settings.

Supply Status Sheet:

Print information sheets showing the status of consumables.

Usage History Sheet:

Print information sheets showing the usage history of the printer.

Print Counter

Select the menus on the control panel as described below.

Settings > **Print Counter**

Displays the total number of prints, B&W prints, and color prints including items such as the status sheet from the time you purchased the printer. If you select **Print Sheet**, the Usage History Sheet is printed.

You can also check the number of pages printed from other functions on the Usage History Sheet.

User Settings

Select the menus on the control panel as described below.

Settings > **User Settings**

Copy:

You can change the default settings in the copy menu.

Scan to Computer

You can change the default settings in the Scan to Computer menu.

Scan to Cloud:

You can change the default settings in the Scan to Cloud menu.

"Cloud Storage Scan Setting Items" on page 72

Customer Research

Select the menus on the control panel as described below.

Settings > **Customer Research**

If you agree to provide customer usage information, product usage information such as the number of prints will be provided to Seiko Epson Corporation.

The information collected is used to improve our products and services.

Provide usage data:

Displays whether or not you have agreed to provide your customer usage information.

Country/Region:

Displays the country or region where you are using the product if you have agreed to provide your customer usage information.

Restore Default Settings

Select the menus on the control panel as described below.

Settings > **Restore Default Settings**

Network Settings:

Resets the network settings to their defaults.

Copy:

Resets the copy settings to their defaults.

Scan Settings:

Resets the scan settings to their defaults.

Clear All Data and Settings:

Clears all the personal information stored in the printer's memory and resets all settings to their defaults.

Firmware Update

Select the menus on the control panel as described below.

Settings > **Firmware Update**

Update:

Check if a later version of the firmware has been uploaded to the network server. If an update is available, you can select whether or not to start updating.

Notification:

Select **On** to receive a notification if a firmware update is available.

Product Specifications

Printer Specifications

Print Head Nozzle Placement		Black ink nozzles: 400×1 rows Color ink nozzles: 128×3 rows for each color
Weight of Paper*	Plain Paper	64 to 90 g/m²
	Envelopes	75 to 100 g/m²

* Even when the paper thickness is within this range, the paper may not feed in the printer or the print quality may decline depending on the paper properties or quality.

Printable Area

Printable Area for Single Sheets

Print quality may decline in the shaded areas due to the printer's mechanism.

Printing with borders

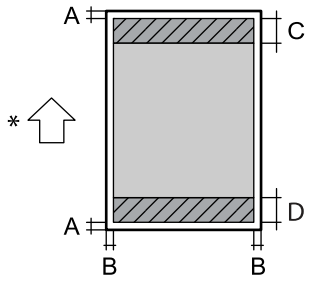	A	3.0 mm (0.12 in.)
	B	3.0 mm (0.12 in.)
	C	41.0 mm (1.61 in.)
	D	37.0 mm (1.46 in.)

*Direction of paper being fed.

Borderless printing

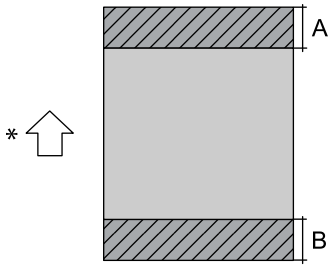	A	44.0 mm (1.73 in.)
	B	40.0 mm (1.57 in.)

*Direction of paper being fed.

Printable Area for Envelopes

Print quality may decline in the shaded areas due to the printer's mechanism.

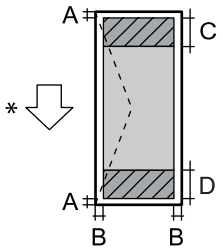	A	3.0 mm (0.12 in.)
	B	3.0 mm (0.12 in.)
	C	18.0 mm (0.71 in.)
	D	41.0 mm (1.61 in.)

*Direction of paper being fed.

Scanner Specifications

Scanner Type	Flatbed

Photoelectric Device	CIS
Effective Pixels	10200×14040 pixels (1200 dpi)
Maximum Document Size	216×297 mm (8.5×11.7 in.) A4, Letter
Scanning Resolution	1200 dpi (main scan) 2400 dpi (sub scan)
Output Resolution	50 to 9600 dpi in 1 dpi increments
Color Depth	Color ❏ 48 bits per pixel internal (16 bits per pixel per color internal) ❏ 24 bits per pixel external (8 bits per pixel per color external) Grayscale ❏ 16 bits per pixel internal ❏ 8 bits per pixel external
Light Source	LED

ADF Specifications

Only for ET-3950 Series/L6370 Series

ADF Type	Auto duplex scanning
Available Paper Sizes	A4, Letter, 8.5×13 in*, Legal*
Paper Type	Plain Paper
Weight of Paper	64 to 95 g/m^2
Loading Capacity	A4, Letter, 8.5×13 in: 30 sheets or 3.3 mm Legal: 10 sheets

* Single-sided scanning only.

Even when the original meets the specifications for media that can be placed in the ADF, it may not feed from the ADF or the scan quality may decline depending on the paper properties or quality.

Using Port for the Printer

The printer uses the following port. These ports should be allowed to become available by the network administrator as necessary.

When the Sender (Client) is the Printer

Use	Destination (Server)	Protocol	Port Number
When Epson Connect is used	Epson Connect Server	HTTPS	443
		XMPP	5222
Control WSD	Client computer	WSD (TCP)	5357

When the Sender (Client) is the Client Computer

Use	Destination (Server)	Protocol	Port Number
Discover the printer from an application such as EpsonNet Config, printer driver, and scanner driver.	Printer	ENPC (UDP)	3289
Collect and set up the MIB information from an application such as EpsonNet Config, printer driver, and scanner driver.	Printer	SNMP (UDP)	161
Forwarding LPR data	Printer	LPR (TCP)	515
Forwarding RAW data	Printer	RAW (Port9100) (TCP)	9100
Forwarding AirPrint (IPP/IPPS printing) data	Printer	IPP/IPPS (TCP)	631
Searching WSD printer	Printer	WS-Discovery (UDP)	3702
Web Config	Printer	HTTP (TCP)	80
		HTTPS (TCP)	443

Interface Specifications

For Computer	Hi-Speed USB*

* USB 3.0 cables are not supported.

Network Specifications

Wi-Fi Specifications

See the following table for Wi-Fi specifications.

ET-3950 Series/L6370 Series

Countries or regions except for those listed below	"Table A" on page 200

Ireland, United Kingdom, Austria, Germany, Liechtenstein, Switzerland, France, Belgium, Luxemburg, Netherlands, Italy, Portugal, Spain, Denmark, Finland, Norway, Sweden, Iceland, Guadeloupe, Martinique, Mayotte, New Caledonia, Saint Pierre and Miquelon, Reunion, French Polynesia, French Guiana, Wallis and Futuna, Croatia, Cyprus, Greece, North Macedonia, Serbia, Slovenia, Malta, Bosnia and Herzegovina, Kosovo, Montenegro, Albania, Bulgaria, Czech Republic, Estonia, Hungary, Latvia, Lithuania, Poland, Romania, Slovakia, Israel, Australia, New Zealand, China, Hong Kong, Mongolia, Taiwan, South Korea	"Table B" on page 201
Turkey	Serial numbers starting with XCYF, XCYG, XCYH, XCYJ, XDQ7, XDQ8, XDQ9, XDQA: "Table A" on page 200 Serial numbers starting with XCYD, XCYE, XDQ5, XDQ6: "Table B" on page 201

ET-3900 Series/L6360 Series

Countries or regions except for those listed below	"Table A" on page 200
Ireland, United Kingdom, Austria, Germany, Liechtenstein, Switzerland, France, Belgium, Luxemburg, Netherlands, Italy, Portugal, Spain, Denmark, Finland, Norway, Sweden, Iceland, Croatia, Cyprus, Greece, North Macedonia, Serbia, Slovenia, Malta, Bosnia and Herzegovina, Kosovo, Montenegro, Albania, Bulgaria, Czech Republic, Estonia, Hungary, Latvia, Lithuania, Poland, Romania, Slovakia, Israel, Australia, New Zealand, China, Hong Kong, Mongolia, Taiwan, South Korea	"Table B" on page 201
Turkey	Serial numbers starting with XCYV, XCYW, XDPP, XDPQ: "Table A" on page 200 Serial numbers starting with XCYU, XDPN: "Table B" on page 201

Table A

Standards	IEEE802.11b/g/n*1
Frequency Range	2.4 GHz
Channels	1/2/3/4/5/6/7/8/9/10/11/12/13
Coordination Modes	Infrastructure, Wi-Fi Direct (Simple AP)*2*3
Security Protocols*4	WEP (64/128bit), WPA2-PSK (AES)*5, WPA3-SAE (AES)

*1 Only available for the HT20

*2 Not supported for IEEE 802.11b

*3 Infrastructure and Wi-Fi Direct modes or an Ethernet connection can be used simultaneously.

*4 Wi-Fi Direct supports WPA2-PSK (AES) only.

*5 Complies with WPA2 standards with support for WPA/WPA2 Personal.

Table B

Standards	IEEE802.11a/b/g/n*1/ac		
Frequency Ranges	IEEE802.11b/g/n: 2.4 GHz, IEEE802.11a/n/ac: 5 GHz		
Channels	Wi-Fi	2.4 GHz	1/2/3/4/5/6/7/8/9/10/11/12*2/13*2
		5 GHz*3	W52 (36/40/44/48), W53 (52/56/60/64), W56 (100/104/108/112/116/120/124/128/132/136/140/144), W58 (149/153/157/161/165)
	Wi-Fi Direct	2.4 GHz	1/2/3/4/5/6/7/8/9/10/11/12*2/13*2
		5 GHz*3	W52 (36/40/44/48) W58 (149/153/157/161/165)
Connection Modes	Infrastructure, Wi-Fi Direct (Simple AP) *4*5		
Security Protocols*6	WEP (64/128bit), WPA2-PSK (AES)*7, WPA3-SAE (AES)		

*1 Only available for the HT20

*2 Not available in Taiwan

*3 The availability of these channels and use of the product outdoors over these channels varies by location. For more information, see the following website.

http://support.epson.net/wifi5ghz/

*4 Not supported for IEEE 802.11b

*5 Infrastructure and Wi-Fi Direct modes or an Ethernet connection can be used simultaneously.

*6 Wi-Fi Direct only supports WPA2-PSK (AES) .

*7 Complies with WPA2 standards with support for WPA/WPA2 Personal.

Ethernet Specifications

Standards	IEEE802.3i (10BASE-T)*1 IEEE802.3u (100BASE-TX) IEEE802.3az (Energy Efficient Ethernet)*2
Communication Mode	Auto, 10Mbps Full duplex, 10Mbps Half duplex, 100Mbps Full duplex, 100Mbps Half duplex
Connector	RJ-45

*1 Use a category 5e or higher STP (Shielded twisted pair) cable to prevent risk of radio interference.

*2 The connected device should comply with IEEE802.3az standards.

Network Functions and IPv4/IPv6

Functions			Supported	Remarks
Network Printing	EpsonNet Print (Windows)	IPv4	✓	-
	Standard TCP/IP (Windows)	IPv4, IPv6	✓	-
	WSD Printing (Windows)	IPv4, IPv6	✓	-
	Bonjour Printing (Mac OS)	IPv4, IPv6	✓	-
	IPP Printing (Windows, Mac OS)	IPv4, IPv6	✓	-
	Epson Connect (Email Print, Remote Print)	IPv4	✓	-
	AirPrint (iOS, Mac OS)	IPv4, IPv6	✓	iOS 5 or later, OS X Mavericks (10.9.5) or later*
Network Scanning	Epson Scan 2	IPv4, IPv6	✓	-
	Epson ScanSmart	IPv4	✓	Windows 7 or later, or OS X El Capitan (10.11) or later
	Epson Event Manager (Mac OS)	IPv4	✓	OS X Yosemite (10.10)/OS X Mavericks (10.9.5)
	Epson Connect (Scan to Cloud)	IPv4	✓	-
	AirPrint (Scan)	IPv4, IPv6	✓	OS X Mavericks (10.9.5) or later*
Fax	Send a fax	IPv4	-	-
	Receive a fax	IPv4	-	-
	AirPrint (Faxout)	IPv4, IPv6	-	-

* We recommend using the latest version of iOS or Mac OS.

Security Protocol

SSL/TLS	HTTPS Server/Client, IPPS
TLS Version	1.3, 1.2, 1.1*, 1.0*
SNMPv3	

* Disabled by default.

Supported Third Party Services

Services		Supported	Remarks
AirPrint	Print	✓	iOS 5 or later/OS X Mavericks (10.9.5) or later*
	Scan	✓	OS X Mavericks (10.9.5) or later*
	Fax	-	-

* We recommend using the latest version of iOS or Mac OS.

Dimensions

ET-3950 Series/L6370 Series

Dimensions	Storage ❏ Width: 375 mm (14.8 in.) ❏ Depth: 347 mm (13.7 in.) ❏ Height: 240 mm (9.4 in.) Printing ❏ Width: 375 mm (14.8 in.) ❏ Depth: 506 mm (19.9 in.) ❏ Height: 269 mm (10.6 in.)
Weight*	Approx. 7.2 kg (15.9 lb)

* Without the ink and the power cord.

ET-3900 Series/L6360 Series

Dimensions	Storage ❏ Width: 375 mm (14.8 in.) ❏ Depth: 347 mm (13.7 in.) ❏ Height: 187 mm (7.4 in.) Printing ❏ Width: 375 mm (14.8 in.) ❏ Depth: 506 mm (19.9 in.) ❏ Height: 187 mm (7.4 in.)
Weight*	Approx. 5.7 kg (12.6 lb)

* Without the ink and the power cord.

Electrical Specifications

ET-3950 Series/L6370 Series

Power Supply Rating	AC 100-240 V	AC 220-240 V
Rated Frequency Range	50-60 Hz	50-60 Hz
Rated Current	0.4-0.2 A	0.2 A
Power Consumption (with USB Connection)	Standalone copying: Approx. 15.0 W (ISO/IEC24712) Ready mode: Approx. 6.9 W Sleep mode: Approx. 0.6 W Power off: Approx. 0.1 W	Standalone copying: Approx. 15.0 W (ISO/IEC24712) Ready mode: Approx. 6.9 W Sleep mode: Approx. 0.6 W Power off: Approx. 0.1 W

Note:

- *Check the label on the printer for its voltage.*
- *For European users, see the following Website for details on power consumption.*
  http://www.epson.eu/energy-consumption

ET-3900 Series/L6360 Series

Power Supply Rating	AC 100-240 V	AC 220-240 V
Rated Frequency Range	50-60 Hz	50-60 Hz
Rated Current	0.4-0.2 A	0.2 A
Power Consumption (with USB Connection)	Standalone copying: Approx. 15.0 W (ISO/IEC24712) Ready mode: Approx. 6.4 W Sleep mode: Approx. 0.6 W Power off: Approx. 0.1 W	Standalone copying: Approx. 15.0 W (ISO/IEC24712) Ready mode: Approx. 6.4 W Sleep mode: Approx. 0.6 W Power off: Approx. 0.1 W

Note:

- *Check the label on the printer for its voltage.*
- *For European users, see the following Website for details on power consumption.*
  http://www.epson.eu/energy-consumption

Environmental Specifications

Operation	Use the printer within the temperature (°C) and humidity (%) ranges shown in the graph, and in an environment without condensation. 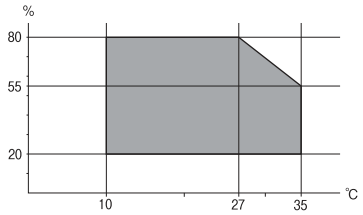
Storage	Temperature after initial ink charging: -15 to 40°C (-5 to 104°F)* Temperature before initial ink charging: -20 to 40°C (-4 to 104°F)* Humidity: 5 to 85% RH (without condensation)

* You can store for one month at 40°C (104°F).

Environmental Specifications for Ink Bottles

Storage Temperature	-20 to 40 °C (-4 to 104 °F)*
Freezing Temperature	-15 °C (5 °F) Ink thaws and is usable after approximately 2 hours at 25 °C (77 °F).

* You can store ink bottles for one month at 40 °C (104 °F).

System Requirements

❏ Windows

Windows 7, Windows 8/8.1, Windows 10, Windows 11 or later

Windows Server 2008 or later

❏ Mac OS

Mac OS X 10.9.5 or later, macOS 11 or later

❏ Chrome OS

Note:
Only supports the standard OS features.

Regulatory Information

Standards and Approvals

Standards and Approvals for U.S. Model

Safety	UL60950-1 CAN/CSA C22.2 No. 60950-1-07
EMC	FCC Part 15 Subpart B Class B CAN ICES-3 (B)/NMB-3 (B)

This equipment contains the following wireless module.

Manufacturer: Seiko Epson Corporation

Type: J26H005

This product conforms to Part 15 of the FCC Rules and RSS of the IC Rules. Epson cannot accept responsibility for any failure to satisfy the protection requirements resulting from a non-recommended modification of the product. Operation is subject to the following two conditions: (1) this device may not cause harmful interference, and (2) this device must accept any interference received, including interference that may cause undesired operation of the device.

To prevent radio interference to the licensed service, this device is intended to be operated indoors and away from windows to provide maximum shielding. Equipment (or its transmit antenna) that is installed outdoors is subject to licensing.

This equipment complies with FCC/IC radiation exposure limits set forth for an uncontrolled environment and meets the FCC radio frequency (RF) Exposure Guidelines in Supplement C to OET65 and RSS of the IC radio frequency (RF) Exposure rules. This equipment should be installed and operated so that the radiator is kept at least 7.9 inches (20 cm) or more away from a person's body (excluding extremities: hands, wrists, feet and ankles).

Standards and Approvals for European Models

The following models are CE/UKCA marked and in compliance with the relevant statutory requirements.

The full text of the declaration of conformity is available at the following website:

https://www.epson.eu/conformity

C639A, C639B, C633C, C633D

Standards and Approvals for Australian Model

EMC	AS/NZS CISPR32 Class B

Epson hereby declares that the following equipment Models are in compliance with the essential requirements and other relevant provisions of AS/NZS4268:

C639A, C633C

Epson cannot accept responsibility for any failure to satisfy the protection requirements resulting from a non-recommended modification of the product.

ZICTA Type Approval for Users in Zambia

See the following website to check the information for ZICTA Type Approval.

https://support.epson.net/zicta/

Standards and Approvals for Mongolian Model

This product contains the following approved part, which is certified by the Communications Regulatory Commission of Mongolia.

11ac+BT combo module: J26H005 (certificate No. A23001079)

German Blue Angel

See the following website to check whether or not this printer meets the standards for the German Blue Angel.

https://www.epson.de/blauerengel

Restrictions on Copying

Observe the following restrictions to ensure the responsible and legal use of the printer.

Copying of the following items is prohibited by law:

- ❏ Bank bills, coins, government-issued marketable securities, government bond securities, and municipal securities
- ❏ Unused postage stamps, pre-stamped postcards, and other official postal items bearing valid postage
- ❏ Government-issued revenue stamps, and securities issued according to legal procedure

Exercise caution when copying the following items:

- ❏ Private marketable securities (stock certificates, negotiable notes, checks, etc.), monthly passes, concession tickets, etc.
- ❏ Passports, driver's licenses, warrants of fitness, road passes, food stamps, tickets, etc.

Note:
Copying these items may also be prohibited by law.

Responsible use of copyrighted materials:

Printers can be misused by improperly copying copyrighted materials. Unless acting on the advice of a knowledgeable attorney, be responsible and respectful by obtaining the permission of the copyright holder before copying published material.

Nameplate

The nameplate is located on the bottom of the product.

Where to Get Help

Technical Support Web Site. 210

Contacting Epson Support. 210

Technical Support Web Site

If you need further help, visit the Epson support website shown below. Select your country or region and go to the support section of your local Epson website. The latest drivers, FAQs, manuals, or other downloadables are also available from the site.

http://support.epson.net/

http://www.epson.eu/support (Europe)

If your Epson product is not operating properly and you cannot solve the problem, contact Epson support services for assistance.

Contacting Epson Support

Before Contacting Epson

If your Epson product is not operating properly and you cannot solve the problem using the troubleshooting information in your product manuals, contact Epson support services for assistance.

The following Epson support list is based on the country of sale. Some products may not be sold in your current location, so be sure to contact Epson support for the area in which you purchased your product.

If Epson support for your area is not listed below, contact the dealer where you purchased your product.

Epson support will be able to help you much more quickly if you give them the following information:

- ❏ Product serial number

  (The label attachment position depends on the product; it may be on the back, the open side of the cover, or the bottom.)

- ❏ Product model
- ❏ Product software version

  (Click **About**, **Version Info**, or a similar button in the product software.)

- ❏ Brand and model of your computer
- ❏ Your computer operating system name and version
- ❏ Names and versions of the software applications you normally use with your product

Note:
Depending on the product, network settings may be stored in the product's memory. Due to breakdown or repair of a product, settings may be lost. Epson shall not be responsible for the loss of any data, for backing up or recovering settings even during a warranty period. We recommend that you make your own backup data or take notes.

Help for Users in Europe

Check your Pan-European Warranty Document for information on how to contact Epson support.

Help for Users in Taiwan

Contacts for information, support, and services are:

World Wide Web

http://www.epson.com.tw

Information on product specifications, drivers for download, and products enquiry are available.

Epson HelpDesk

Phone: +886-2-2165-3138

Our HelpDesk team can help you with the following over the phone:

- ❏ Sales enquiries and product information
- ❏ Product usage questions or problems
- ❏ Enquiries on repair service and warranty

Repair service center:

http://www.tekcare.com.tw/branchMap.page

TekCare corporation is an authorized service center for Epson Taiwan Technology & Trading Ltd.

Help for Users in Australia

Epson Australia wishes to provide you with a high level of customer service. In addition to your product manuals, we provide the following sources for obtaining information:

Internet URL

http://www.epson.com.au

Access the Epson Australia World Wide Web pages. Worth taking your modem here for the occasional surf! The site provides a download area for drivers, Epson contact points, new product information and technical support (e-mail).

Epson Helpdesk

Phone: 1300-361-054

Epson Helpdesk is provided as a final backup to make sure our clients have access to advice. Operators on the Helpdesk can aid you in installing, configuring and operating your Epson product. Our Pre-sales Helpdesk staff can provide literature on new Epson products and advise where the nearest dealer or service agent is located. Many types of queries are answered here.

We encourage you to have all the relevant information on hand when you ring. The more information you prepare, the faster we can help solve the problem. This information includes your Epson product manuals, type of computer, operating system, application programs, and any information you feel is required.

Transportation of Product

Epson recommends retaining product packaging for future transportation. Securing the ink tank with tape and keeping the product upright is also recommended.

Help for Users in New Zealand

Epson New Zealand wishes to provide you with a high level of customer service. In addition to your product documentation, we provide the following sources for obtaining information:

Internet URL

http://www.epson.co.nz

Access the Epson New Zealand World Wide Web pages. Worth taking your modem here for the occasional surf! The site provides a download area for drivers, Epson contact points, new product information and technical support (e-mail).

Epson Helpdesk

Phone: 0800 237 766

Epson Helpdesk is provided as a final backup to make sure our clients have access to advice. Operators on the Helpdesk can aid you in installing, configuring and operating your Epson product. Our Pre-sales Helpdesk staff can provide literature on new Epson products and advise where the nearest dealer or service agent is located. Many types of queries are answered here.

We encourage you to have all the relevant information on hand when you ring. The more information you prepare, the faster we can help solve the problem. This information includes your Epson product documentation, type of computer, operating system, application programs, and any information you feel is required.

Transportation of Product

Epson recommends retaining product packaging for future transportation. Securing the ink tank with tape and keeping the product upright is also recommended.

Help for Users in Singapore

Sources of information, support, and services available from Epson Singapore are:

World Wide Web

http://www.epson.com.sg

Information on product specifications, drivers for download, Frequently Asked Questions (FAQ), Sales Enquiries, and Technical Support via e-mail are available.

Epson HelpDesk

Toll Free: 800-120-5564

Our HelpDesk team can help you with the following over the phone:

- ❏ Sales enquiries and product information
- ❏ Product usage questions or problem troubleshooting
- ❏ Enquiries on repair service and warranty

Help for Users in Thailand

Contacts for information, support, and services are:

World Wide Web

http://www.epson.co.th

Information on product specifications, drivers for download, Frequently Asked Questions (FAQ), and e-mail are available.

Epson Call Centre

Phone: 66-2460-9699

Email: support@eth.epson.co.th

Our Call Centre team can help you with the following over the phone:

- ❏ Sales enquiries and product information
- ❏ Product usage questions or problems
- ❏ Enquiries on repair service and warranty

Help for Users in Vietnam

Contacts for information, support, and services are:

Epson Service Center

27 Yen Lang, Trung Liet Ward, Dong Da District, Ha Noi City. Tel: +84 24 7300 0911

38 Le Dinh Ly, Thac Gian Ward, Thanh Khe District, Da Nang. Tel: +84 23 6356 2666

194/3 Nguyen Trong Tuyen, Ward 8, Phu Nhuan Dist., HCMC. Tel: +84 28 7300 0911

31 Phan Boi Chau, Ward 14, Binh Thanh District, HCMC. Tel: +84 28 35100818

Help for Users in Indonesia

Contacts for information, support, and services are:

World Wide Web

http://www.epson.co.id

- ❏ Information on product specifications, drivers for download
- ❏ Frequently Asked Questions (FAQ), Sales Enquiries, questions through e-mail

Epson Hotline

Phone: 1500-766 (Indonesia Only)

Email: customer.care@ein.epson.co.id

Our Hotline team can help you with the following over the phone or email:

- ❏ Sales enquiries and product information
- ❏ Technical support

Help for Users in Hong Kong

To obtain technical support as well as other after-sales services, users are welcome to contact Epson Hong Kong Limited.

Internet Home Page

http://www.epson.com.hk

Epson Hong Kong has established a local home page in both Chinese and English on the Internet to provide users with the following information:

- ❏ Product information
- ❏ Answers to Frequently Asked Questions (FAQs)
- ❏ Latest versions of Epson product drivers

Technical Support Hotline

You can also contact our technical staff at the following telephone and fax numbers:

Phone: 852-2827-8911

Fax: 852-2827-4383

Help for Users in Malaysia

Contacts for information, support, and services are:

World Wide Web

http://www.epson.com.my

- ❏ Information on product specifications, drivers for download
- ❏ Frequently Asked Questions (FAQ), Sales Enquiries, questions through e-mail

Epson Call Centre

Phone: 1800-81-7349 (Toll Free)

Email: websupport@emsb.epson.com.my

- ❏ Sales enquiries and product information
- ❏ Product usage questions or problems
- ❏ Enquiries on repair services and warranty

Epson Malaysia Sdn Bhd (Head Office)

Phone: 603-56288288

Fax: 603-5628 8388/603-5621 2088

Help for Users in India

Contacts for information, support, and services are:

World Wide Web

http://www.epson.co.in

Information on product specifications, drivers for download, and products enquiry are available.

Toll Free Helpline

For Service, Product information or to order consumables -

18004250011 / 186030001600 / 1800123001600 (9AM – 6PM)

Email

calllog@epson–india.in

WhatsApp

+91 96400 00333

Help for Users in the Philippines

To obtain technical support as well as other after sales services, users are welcome to contact the Epson Philippines Corporation at the telephone, fax numbers and e-mail address below:

World Wide Web

http://www.epson.com.ph

Information on product specifications, drivers for download, Frequently Asked Questions (FAQ), and E-mail Enquiries are available.

Epson Philippines Customer Care

Toll Free: (PLDT) 1-800-1069-37766

Toll Free: (Digitel) 1-800-3-0037766

Metro Manila: +632-8441-9030

Web Site: https://www.epson.com.ph/contact

E-mail: customercare@epc.epson.com.ph

Accessible 9am to 6pm, Monday through Saturday (Except public holidays)

Our Customer Care team can help you with the following over the phone:

- ❏ Sales enquiries and product information
- ❏ Product usage questions or problems
- ❏ Enquiries on repair service and warranty

Epson Philippines Corporation

Trunk Line: +632-8706-2609

Fax: +632-8706-2663 / +632-8706-2665