SHARP

OPERATION MANUAL

Large Format Display

MultiSync®

PN-M322

HDMI™

MODEL: PN-M322
Please find your model name on the label on the rear side of the monitor.

Table of Contents

DEAR CUSTOMER **2**
Important Information **3**
Safety Precautions and Maintenance 5
Recommended Use & Maintenance 11
Trademark and Software License 12
MOUNTING PRECAUTIONS 12
Part Names **17**
Connecting Peripheral Equipment **19**
Preparing the Remote Control Unit **22**
Installing the batteries 22
Remote control operation range 23
Turning Power On/Off **24**
Turning on the main power 24
Turning power on 24
Turning power off 25
Power ON and OFF 25
Using Power Management 26
Basic Operation **27**
Using the button and key 27
Using the remote control unit 27
Menu Items **31**
Opening the menu window 31
Menu item details 32
Using the Media Player menu 47
Advanced Operation **51**
Setting Security and Locking the Monitor Controls 52
Setting the Remote Control ID Function 56
Connecting Multiple Monitors 58
Controlling the Monitor with a computer (RS-232C) **59**
Controlling the Monitor with a computer (LAN) **60**
Commands 67
Proof of Play 68
Troubleshooting **69**
Screen Image and Video Signal Issues 69
Hardware Issues 70
Specifications **72**
Appendix-A External Resources **75**
Mounting Precautions
(For SHARP dealers and service engineers) **76**
Manufacturer's Recycling and Energy Information **78**
Energy Saving 78

DEAR CUSTOMER

Thank you for your purchase of a product. To ensure safety and many years of trouble-free operation of your product, please read the "Safety Precautions and Maintenance" carefully before using this product.

Mounting the monitor requires expertise and the work must be carefully performed by a trained service person in accordance with the section "Mounting Precautions (For SHARP dealers and service engineers)".

NOTE:

Product warranty does not cover damage caused by improper installation. Failure to follow these recommendations could result in voiding the warranty.

Important Information

IMPORTANT:

To aid reporting in case of loss or theft, please record the product's model and serial numbers in the space provided. The numbers are located in the rear of the product.

Model No.:

Serial No.:

U.S.A. ONLY

To maintain compliance with EMC regulations, use shielded cables to connect to the following terminals: HDMI input terminal, DisplayPort input terminal, USB port, RS-232C input terminal. Use shielded signal cables with ferrite core to connect to the following terminals: VGA(RGB) input terminal.

Supplier's Declaration of Conformity

SHARP LCD MONITOR, PN-M322

This device complies with Part 15 of the FCC Rules. Operation is subject to the following two conditions: (1) This device may not cause harmful interference, and (2) this device must accept any interference received, including interference that may cause undesired operation.

Responsible Party:

SHARP ELECTRONICS CORPORATION
100 Paragon Drive, Montvale, NJ 07645
TEL: (630) 467-3000 www.sharpusa.com

U.S.A. ONLY

WARNING:
FCC Regulations state that any unauthorized changes or modifications to this equipment not expressly approved by the manufacturer could void the user's authority to operate this equipment.

NOTE:
This equipment has been tested and found to comply with the limits for a Class B digital device, pursuant to Part 15 of the FCC Rules. These limits are designed to provide reasonable protection against harmful interference in a residential installation.
This equipment generates, uses and can radiate radio frequency energy and, if not installed and used in accordance with the instructions, may cause harmful interference to radio communications. However, there is no guarantee that interference will not occur in a particular installation.
If this equipment does cause harmful interference to radio or television reception, which can be determined by turning the equipment off and on, the user is encouraged to try to correct the interference by one or more of the following measures:
- Reorient or relocate the receiving antenna.
- Increase the separation between the equipment and receiver.
- Connect the equipment into an outlet on a circuit different from that to which the receiver is connected.
- Consult the dealer or an experienced radio/TV technician for help.

U.S.A. ONLY

WARNING:
An apparatus with CLASS I construction shall be connected to a MAIN socket outlet with a protective earthing connection.

(For Customers in U.K.)

IMPORTANT

- The wires in this mains lead are coloured in accordance with the following code:

GREEN-AND-YELLOW:	**"Earth"**
BLUE:	**"Neutral"**
BROWN:	**"Live"**

- As the colours of the wires in the mains lead of this apparatus may not correspond with the coloured markings identifying the terminals in your plug proceed as follows:
  - The wire which is coloured GREEN-AND-YELLOW must be connected to the terminal in the plug which is marked by the letter **E** or by the safety earth symbol ⏚ or coloured green or green-and-yellow.
  - The wire which is coloured BLUE must be connected to the terminal which is marked with the letter **N** or coloured black.
  - The wire which is coloured BROWN must be connected to the terminal which is marked with the letter **L** or coloured red.
- Ensure that your equipment is connected correctly. If you are in any doubt consult a qualified electrician.

"WARNING: THIS APPARATUS MUST BE EARTHED."

Information on the Disposal of this Equipment and its Batteries

IF YOU WISH TO DISPOSE OF THIS EQUIPMENT OR ITS BATTERIES, DO NOT USE THE ORDINARY WASTE BIN, AND DO NOT PUT THEM INTO A FIREPLACE!
Used electrical and electronic equipment and batteries should always be collected and treated SEPARATELY in accordance with local law.
Separate collection promotes an environment-friendly treatment, recycling of materials, and minimizing final disposal of waste. IMPROPER DISPOSAL can be harmful to human health and the environment due to certain substances! Take USED EQUIPMENT to a local, usually municipal, collection facility, where available.
Remove USED BATTERIES from equipment, and take them to a battery collection facility; usually a place where new batteries are sold.
If in doubt about disposal, contact your local authorities or dealer and ask for the correct method of disposal.
ONLY FOR USERS IN THE EUROPEAN UNION, AND SOME OTHER COUNTRIES; FOR INSTANCE NORWAY AND SWITZERLAND: Your participation in separate collection is requested by law.
The symbol shown above appears on electrical and electronic equipment and batteries (or the packaging) to remind users of this. If 'Hg' or 'Pb' appears below the symbol, this means that the battery contains traces of mercury (Hg) or lead (Pb), respectively.
Users from PRIVATE HOUSEHOLDS are requested to use existing return facilities for used equipment and batteries. Batteries are collected at points of sale. Return is free of charge.
If the equipment has been used for BUSINESS PURPOSES, please contact your SHARP dealer who will inform you about take-back. You might be charged for the costs arising from take-back. Small equipment (and small quantities) might be taken back by your local collection facility. For Spain: Please contact the established collection system or your local authority for take-back of your used products.

NOTE:
(1) The contents of this manual may not be reprinted in part or whole without permission.
(2) The contents of this manual are subject to change without notice.
(3) Great care has been taken in the preparation of this manual; however, should you notice any questionable points, errors or omissions, please contact us.
(4) The image shown in this manual is indicative only. If there is inconsistency between the image and the actual product, the actual product shall govern.
(5) Notwithstanding articles (3) and (4), we will not be responsible for any claims on loss of profit or other matters deemed to result from using this device.
(6) This manual is commonly provided to all regions so they may contain descriptions that are pertinent for other countries.
(7) Language of OSD menu used in this manual is English by way of example.

Safety Precautions and Maintenance

FOR OPTIMUM PERFORMANCE, PLEASE NOTE
THE FOLLOWING WHEN SETTING UP AND
USING THE LCD COLOR MONITOR:

About the Symbols

To ensure safe and proper use of the product, this manual uses a number of symbols to prevent injury to you and others as well as damage to property. The symbols and their meanings are described below. Be sure to understand them thoroughly before reading this manual.

WARNING	Failing to heed this symbol and handling the product incorrectly could result in accidents leading to major injury or death.
CAUTION	Failing to heed this symbol and handling the product incorrectly could result in personal injury or damage to surrounding property.

Examples of symbols

	This symbol indicates a warning or caution.
	This symbol indicates a prohibited action.
	This symbol indicates a mandatory action.

WARNING	
UNPLUG THE POWER CORD	Unplug the power cord if the product malfunctions. Should the product emit smoke or strange odors or sounds, or if the product has been dropped or the cabinet broken, turn off the product's power, then unplug the power cord from the power outlet. Contact your dealer for repairs. Never try to repair the product on your own. Doing so is dangerous.
DO NOT MODIFY	Do not open or remove the product's cabinet. Do not disassemble the product. There are high voltage areas in the product. Opening or removing product covers and modifying the product may expose you to electric shock, fire, or other risks. Refer all servicing to qualified service personnel.
PROHIBITED	Do not use the product if it has structural damage. If you notice any structural damage such as cracks or unnatural wobbling, please refer servicing to qualified service personnel. If the product is used in this condition, the product may fall or cause personal injury.

WARNING	
Handling the power cord.	
PROHIBITED	Do not scratch or modify the cord. • Do not place heavy objects on the cord. • Do not let the weight of the product rest on the cord. • Do not cover the cord with a rug, etc. • Do not bend, twist or pull the cord with excessive force. • Do not apply heat to the cord. Handle the power cord with care. Damaging the cord could lead to fire or electric shock. If the cord gets damaged (exposed core wires, broken wires, etc.), turn off the product's power, then unplug the power cord from the power outlet. Ask your dealer to replace it.
DO NOT TOUCH	Do not touch the power plug if you hear thunder. Doing so could result in electric shock.
DO NOT TOUCH WITH WET HANDS	Do not connect or disconnect the power cord with wet hands. It may cause an electric shock.
REQUIRED	Please use the power cord provided with this product. Do not exceed the product's specified power supply voltage where it is installed. Doing so could result in a fire or electric shock. Please refer to the power supply voltage information in the specification. If a power cord is not supplied with this product, please contact us. For all other cases, please use the power cord with the plug style that matches the power socket where the product is located. The compatible power cord corresponds to the AC voltage of the power outlet and has been approved by, and complies with, the safety standards in the country of purchase.
MUST BE EARTHED	This equipment is designed to be used in the condition of the power cord connected to the earth. If the power cord is not connected to the earth, it may cause electric shock. Please make sure the power cord is connected to the wall outlet directly and earthed properly. Do not use a 2-pin plug converter adapter.
REQUIRED	For proper installation it is strongly recommended to use a trained service person. Failure to follow the standard installation procedures could result in damage to the product or injury to the user or installer.
REQUIRED	Please install the product in accordance with the following information. This product cannot be used or installed without the table top stand or other mounting accessory for support. When transporting, moving, or installing the product, please use as many people as necessary to be able to lift the product by the two handles without causing personal injury or damage to the product. Please refer to the instructions included with the optional mounting equipment for detailed information about attaching or removing. Do not cover the vents on the product. Improper installation of the product may result in damage to the product, an electric shock or fire.

WARNING	
REQUIRED	Do not install the product in the locations below: • Poorly ventilated spaces. • Near a radiator, other heat sources, or in direct sunshine. • Continual vibration areas. • Humid, dusty, steamy, or oily areas. • An environment where there are corrosive gases (sulfur dioxide, hydrogen sulfide, nitrogen dioxide, chlorine, ammonia, ozone, etc.). • Outdoors. • High-temperature environment where humidity changes rapidly and condensation is likely to occur. • A ceiling or wall that is not strong enough to support the product and mounting accessories. Do not mount the product upside down.
REQUIRED	Prevent tipping and falling for earthquakes or other shocks. To prevent personal injury or damage to the product caused by tipping over due to earthquakes or other shocks, make sure to install the product in a stable location and take measures to prevent falling. The measures to prevent falling and tipping are intended for reducing the risk of injury, but may not guarantee the effectiveness against all earthquakes. **The product may tip causing personal injury.** • When using the product with the optional table top stand, fasten the product to a wall using a cord or chain that can support the weight of the product in order to prevent the product from falling. • Depending on the table top stand, the stand has the structure for preventing tipping. • Please refer to the table top stand manual. • Be sure to remove the cord or chain from the wall before moving the product to prevent personal injury or damage to the product. **The product may fall causing personal injury.** • Do not attempt to hang the product using an installation safety wire. • Please install the product in an area on the wall or ceiling strong enough to support the weight of the product. • Prepare the product using mounting accessories, such as hook, eyebolt, or mounting parts, and then secure the product with a safety wire. The safety wire must not be tight. • Please make sure the mounting accessories are strong enough to support the product weight and size before installing it.

	WARNING
REQUIRED	Stability Hazard. The product may fall, causing serious personal injury or death. To prevent injury, this product must be securely attached to the floor/wall in accordance with the installation instructions. Many injuries, particularly to children, can be avoided by taking simple precautions such as: • ALWAYS use stands or installation methods recommended by the manufacturer of the product set. • ALWAYS use furniture that can safely support the product. • ALWAYS ensure the product is not overhanging the edge of the supporting furniture. • ALWAYS educate children about the dangers of climbing on furniture to reach the product or its controls. • ALWAYS route cords and cables connected to your product so they cannot be tripped over, pulled or grabbed. • NEVER place a product in an unstable location. • NEVER place the product on tall furniture (for example, cupboards or bookcases) without anchoring both the furniture and the product to a suitable support. • NEVER place the product on cloth or other materials that may be located between the product and supporting furniture. • NEVER place items that might tempt children to climb, such as toys and remote controls, on the top of the product or furniture on which the product is placed. If the existing product is going to be retained and relocated, the same considerations as above should be applied.
PROHIBITED	Do not place this product on a sloping or unstable cart, stand or table. Doing so could lead to falling or tipping and cause personal injury.
PROHIBITED	Do not insert objects of any kind into the cabinet slots. It may cause electric shock, fire, or product failure. Keep objects away from children and babies. If objects get into the cabinet slot, turn off the product's power, then unplug the power cord from the power outlet. Contact your dealer for repairs.
DO NOT WET	Do not spill any liquids into the cabinet or use your product near water. Immediately turn off the power and unplug your product from the wall outlet, then refer servicing to qualified service personnel. It may cause an electric shock or start a fire. Do not install the product under equipment that discharges water, such as air conditioners.
PROHIBITED	Do not use flammable gas sprays to remove dust when cleaning the product. Doing so could lead to a fire.
PROHIBITED	Usage of the product must not be accompanied by fatal risks or dangers that, could lead directly to death, personal injury, severe physical damage or other loss, including nuclear reaction control in nuclear facility, medical life support system, and missile launch control in a weapon system.

CAUTION	
Handling the power cord.	
REQUIRED	The monitor should be installed close to an easily accessible power outlet.
REQUIRED	When connecting the power cord to the product's AC input terminal, make sure the connector is fully and firmly inserted. An incomplete connection of the power cord may cause overheating of the plug; it allows dust to get on the plug connection, which can lead to a fire. Touching the pins of a partially inserted plug may lead to an electric shock. If a cable clamp and a screw are provided with the product, fasten the power cord to the product by attaching them to prevent a loose connection.
REQUIRED	Handling the power cord by following below to avoid fire or electric shock. • When connecting or disconnecting the power cord, pull the power cord out by holding onto its plug. • Unplug the power cord from the power outlet before cleaning the product or when not planning to use the product for an extended time. • When the power cord or plug is heat or damaged, unplug the power cord from the power outlet, and contact a qualified service person.
REQUIRED	Regularly dust off the power cord by using a soft dry cloth.
REQUIRED	Before moving the product, make sure the product power is off, then unplug the power cord from the power outlet and check that all cables connecting the product to other devices are disconnected.
PROHIBITED	Do not use the power cord with a power tap. Adding an extension cord may lead to fire as a result of overheating.
PROHIBITED	Do not bind the power cord and the USB cable. It may trap heat and cause a fire.
PROHIBITED	Do not connect to a LAN with excessive voltage. When using a LAN cable, do not connect to a peripheral device with wiring that might have excessive voltage. Excessive voltage on the LAN terminal may cause an electric shock.
PROHIBITED	Do not climb on the table where the product is installed. Do not install the product on a wheeled table if the wheels on the table have not been properly locked. The product may fall, causing damage to the product or personal injury.
REQUIRED	Installation, removal, and height adjustment of the optional table top stand. • When installing the table top stand, handle the unit with care to avoid pinching your fingers. • Installing the product at the wrong height can cause tipping. Please install your product at proper height to prevent personal injury or damage to the product.
PROHIBITED	Do not push or climb on the product. Do not grab or hang onto the product. Do not rub or tap the product with hard objects. The product may fall, causing damage to the product or personal injury.
PROHIBITED	Do not hit or strike the screen. Do not push against the screen with a pointed object. It can cause serious damage to the product or personal injury.

	CAUTION
REQUIRED	Incorrect usage of batteries can result in leaks or bursting. • Use the specified batteries only. • Insert batteries matching the (+) and (–) signs on each battery to the (+) and (–) signs of the battery compartment. • Do not mix battery brands. • Do not combine new and old batteries. This can shorten battery life or cause liquid leakage of batteries. • Remove dead batteries immediately to prevent battery acid from leaking into the battery compartment. If leaked battery fluid gets on your skin or clothing, rinse immediately and thoroughly. If it gets into your eye, bathe your eye well rather than rubbing and seek medical treatment immediately. Leaked battery fluid that gets into your eye or your clothing may cause a skin irritation or damage your eye. • If you will not use the Remote control unit for a long time, remove the batteries. • Leaving a battery in an extremely high temperature surrounding environment, or a battery subject to extremely low air pressure, that can result in an explosion or the leakage of flammable liquid or gas. • Properly dispose of depleted batteries. Disposal of a battery into water, fire, or a hot oven, or mechanically crushing, cutting, or modifying a battery can result in an explosion. • Do not short-circuit the batteries. • Do not charge the batteries. The batteries provided are not rechargeable. • Contact your dealer or local authorities when disposing of batteries.
PROHIBITED	Do not stay in contact with the parts of the product that become hot for long periods of time. Doing so may result in low-temperature burns.
REQUIRED	Suitable for entertainment purposes at controlled luminous environments, to avoid disturbing reflections from the screen.
REQUIRED	We recommend wiping clean the ventilation opening a minimum of once a month. Failure to do so could lead to fire or electric shock or damage to the product.
REQUIRED	To ensure the product's reliability, please clean the ventilation opening at the rear side of the cabinet at least once a year to remove dirt and dust. Failure to do so could lead to fire or electric shock or damage to the product.
REQUIRED	Avoid locations with extreme temperatures and humidity. Failure to do so could lead to fire or electric shock or damage to the product. The usage environment for this product is as follows: • The operating temperature: 0 °C to 40 °C/32 °F to 104 °F/ humidity: 20 to 80% (without condensation) • The storage temperature: -20 °C to 60 °C/-4 °F to 140 °F/ humidity: 10 to 80% (without condensation)

NOTE:
- This product can only be serviced in the country where it was purchased.
- When you use a network, your communication data is exposed to the risks of being stolen or illegally accessed. To avoid these risks, you need to use this monitor in a secure network environment.

Recommended Use & Maintenance

■Recommended Use

Ergonomics

To realize the maximum ergonomic benefits, we recommend the following:

- For optimum performance of the monitor, allow 20 minutes for warming up. Avoid reproduction of still patterns on the monitor for long periods of time to avoid image persistence (after image effects).
- Rest your eyes periodically by focusing on an object at least 5 feet away. Blink often.
- Position the monitor at a 90° angle to windows and other light sources to minimize glare and reflections.
- Adjust the monitor's brightness, contrast and sharpness controls to enhance readability.
- Get regular eye checkups.
- Use the preset Size and Position controls with standard input signals.
- Use the preset color settings.
- Use non-interlaced signals.
- Do not view the primary color blue on a dark background. It is difficult to see and may cause eye fatigue due to insufficient contrast.

■Maintenance

Cleaning the LCD Screen

- When the LCD screen is dusty, please gently wipe with a soft cloth.
- Clean the LCD screen surface with a lint-free, non-abrasive cloth. Avoid using any cleaning solution or glass cleaner!
- Please do not rub the LCD screen with a hard or abrasive material.
- Please do not apply pressure to the LCD screen surface.
- Please do not use OA cleaner as it will cause deterioration or discoloration on the LCD screen surface.

Cleaning the Cabinet

- Unplug the power supply.
- Gently wipe the cabinet with a soft cloth.
- To clean the cabinet, dampen the cloth with a neutral detergent and water, wipe the cabinet and follow with a dry cloth.

NOTE: DO NOT clean with benzene thinner, alkaline detergent, alcoholic system detergent, glass cleaner, wax, polish cleaner, soap powder, or insecticide. Rubber or vinyl should not be in contact with the cabinet for an extended period of time.
These types of fluids and materials can cause the paint to deteriorate, crack or peel.

Trademark and Software License

Microsoft® and Windows® are trademarks of the Microsoft group of companies.

DisplayPort™ and the DisplayPort™ logo are trademarks owned by the Video Electronics Standards Association (VESA®) in the United States and other countries.

MultiSync is a trademark or registered trademark of Sharp NEC Display Solutions, Ltd. in Japan and other countries.

The terms HDMI, HDMI High-Definition Multimedia Interface, HDMI Trade dress and the HDMI Logos are trademarks or registered trademarks of HDMI Licensing Administrator, Inc.

Blu-ray is a trademark of Blu-ray Disc Association.

TILE COMP is trademark or registered trademark of Sharp NEC Display Solutions, Ltd. in Japan and other countries.

PJLink trademark and logo are trademarks applied for registration or are already registered in Japan, the United States of America and other countries and areas.

All other brands and product names are trademarks or registered trademarks of their respective owners.

[Notice] About the MPEG-4 AVC, MPEG-4 Visual license included in this product

1. MPEG AVC

THIS PRODUCT IS LICENSED UNDER THE AVC PATENT PORTFOLIO LICENSE FOR THE PERSONAL USE OF A CONSUMER OR OTHER USES IN WHICH IT DOES NOT RECEIVE REMUNERATION TO (i) ENCODE VIDEO IN COMPLIANCE WITH THE AVC STANDARD (“AVC VIDEO”) AND/OR (ii) DECODE AVC VIDEO THAT WAS ENCODED BY A CONSUMER ENGAGED IN A PERSONAL ACTIVITY AND/OR WAS OBTAINED FROM A VIDEO PROVIDER LICENSED TO PROVIDE AVC VIDEO. NO LICENSE IS GRANTED OR SHALL BE IMPLIED FOR ANY OTHER USE. ADDITIONAL INFORMATION MAY BE OBTAINED FROM MPEG LA, L.L.C. SEE HTTP://WWW.MPEGLA.COM

2. MPEG-4 Visual

THIS PRODUCT IS LICENSED UNDER THE MPEG-4 VISUAL PATENT PORTFOLIO LICENSE FOR THE PERSONAL AND NON-COMMERCIAL USE OF A CONSUMER FOR (i) ENCODING VIDEO IN COMPLIANCE WITH THE MPEG-4 VISUAL STANDARD (“MPEG-4 VIDEO”) AND/OR (ii) DECODING MPEG-4 VIDEO THAT WAS ENCODED BY A CONSUMER ENGAGED IN A PERSONAL AND NONCOMMERCIAL ACTIVITY AND/OR WAS OBTAINED FROM A VIDEO PROVIDER LICENSED BY MPEG LA TO PROVIDE MPEG-4 VIDEO. NO LICENSE IS GRANTED OR SHALL BE IMPLIED FOR ANY OTHER USE. ADDITIONAL INFORMATION INCLUDING THAT RELATING TO PROMOTIONAL, INTERNAL AND COMMERCIAL USES AND LICENSING MAY BE OBTAINED FROM MPEG LA, LLC. SEE HTTP://WWW.MPEGLA.COM.

MOUNTING PRECAUTIONS

■For Customer

Please contact your supplier as they may be able to provide a list of qualified installation professionals. Mounting on a wall or ceiling and hiring a technician is the customer’s responsibility.

Maintenance

- Periodically check for loose screws, gaps, distortions, or other problems that may occur with the mounting equipment. If a problem is detected, please refer to qualified personnel for service.
- Regularly check the mounting location for signs of damage or weakness that may occur over time.

NOTE: If using a cover made of glass or acrylic to protect the panel surface of the main unit, the panel is sealed and the internal temperature rises.
Reduce the monitor’s brightness to prevent the internal temperature from rising. If the monitor is connected to a computer, use the computer’s power management function to control the monitor’s automatic power off.

MOUNTING PRECAUTIONS (Continued)

■For Trained Installers

For SHARP dealers or service engineers, please confirm “Mounting Precautions (For SHARP dealers and service engineers)”. (See page 76).

Carefully inspect the location where the unit is to be mounted. Not all walls or ceilings are capable of supporting the weight of the unit. The weight of this monitor is provided in the specifications (see “Product Specifications” on page 73). Product warranty does not cover damage caused by improper installation, re-modeling, or natural disasters. Failure to comply with these recommendations could result in voiding the warranty.

To ensure safe installation, use two or more brackets to mount the unit. Mount the unit to at least two points on the installation location.

Allow for adequate ventilation or provide air conditioning around the monitor, so that heat can properly dissipate away from the monitor and from the mounting equipment.

■Ventilation Requirements

When mounting in an enclosed space or recessed area, leave adequate room between the monitor and the enclosure to allow heat to disperse, as shown below.

NOTE:
- Allow adequate ventilation or provide air conditioning around the monitor, so that heat can properly dissipate away from the unit and the mounting equipment; especially when you use monitors in a multiple screen configuration.
- This monitor has internal temperature sensors.
  If the monitor overheats, a “Caution” warning appears. If the “Caution” warning appears, stop using the unit, turn off the power and allow it to cool.
- This monitor should be used at an ambient temperature between 32°F (0°C) and 104°F (40°C). Provide enough space around the monitor to prevent heat from accumulating inside.
- Temperature condition may change when using the monitor together with the optional equipments recommended by SHARP. In such cases, please check the temperature condition specified by the optional equipments.

For the monitor in landscape orientation

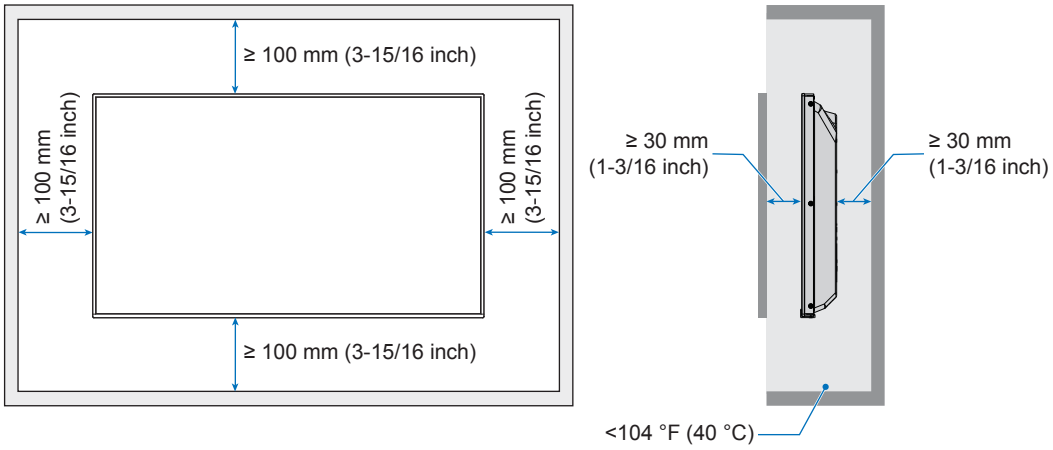

MOUNTING PRECAUTIONS (Continued)

For the monitor in portrait orientation

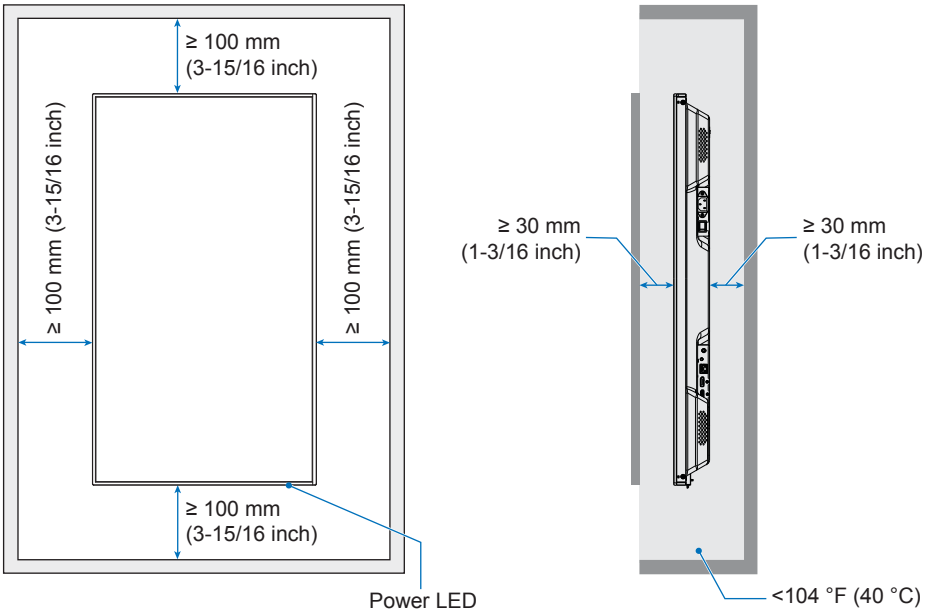

NOTE: When used in a video wall configuration for a long time, slight expansion of the monitors may happen due to temperature changes. It is recommended that a gap of over one millimeter is kept between adjacent monitor edges.

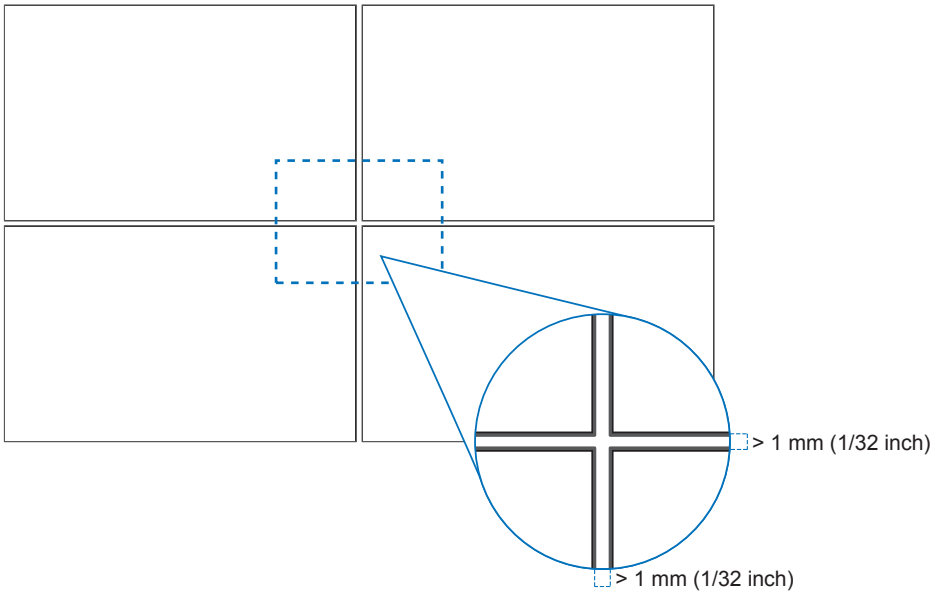

MOUNTING PRECAUTIONS (Continued)

■Orientation

- When using this monitor in a portrait position (viewing from the front), ensure to rotate it counterclockwise so that the right side is moved to the top and the left side is moved to the bottom.
- If installed in the wrong orientation, heat may be trapped inside the main unit and the lifetime of the monitor may be shortened.
- It cannot be installed upside down.

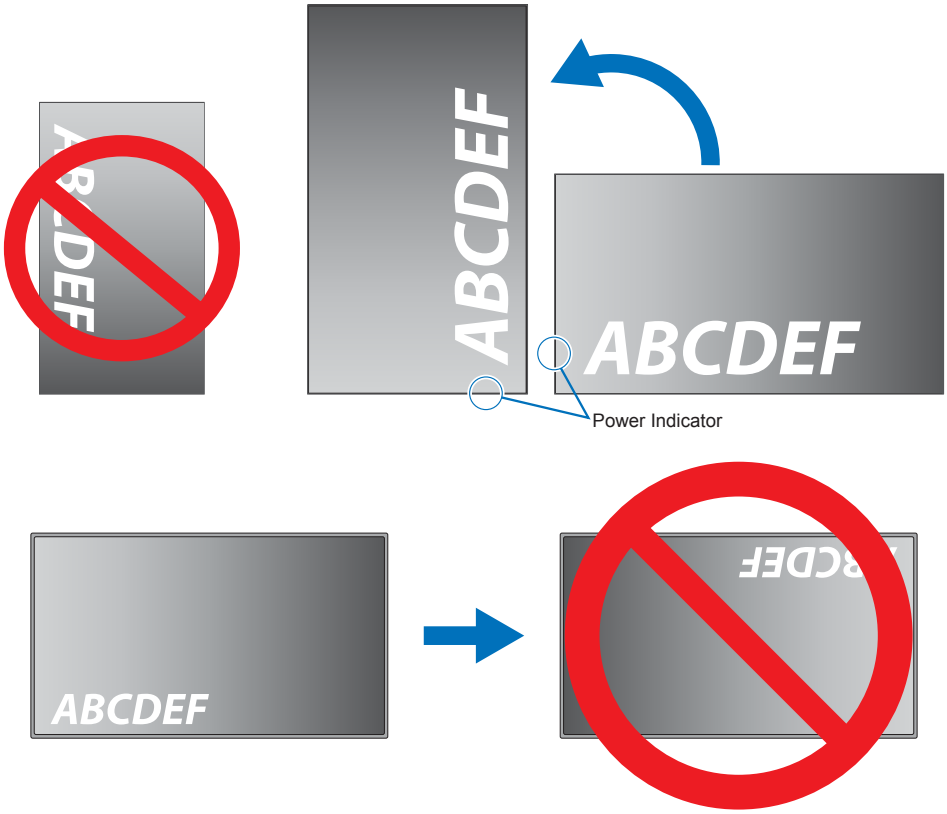

■Changing the logo ornament position

When using the monitor in the portrait position, the logo ornament position can be changed.

Removing the logo ornament: Unscrew the installed screw then take off the logo ornament.

Attaching the logo ornament: Adjust the protrusions inside of the logo ornament into the protrusion holes on the bezel. Make sure the hole for the screw on the logo ornament and the hole for the screw on the bezel are aligned. Install the logo ornament with the screw which is used for installing the logo ornament. (Recommended Fasten Force: 30-40 N•cm).

NOTE: Do not use any other screw to install the logo ornament.

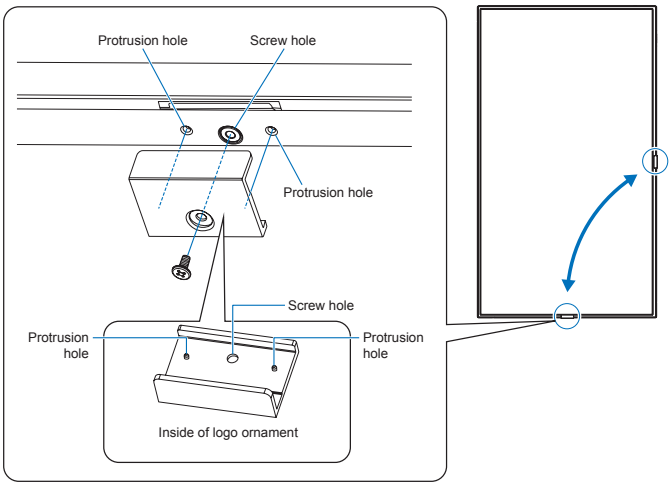

MOUNTING PRECAUTIONS (Continued)

■Clamp the power cord

Be sure to clamp the power cord (supplied) using the supplied cable clamp. When clamping the power cord, take care not to stress the terminal of the power cord. Do not bend the power cord excessively.

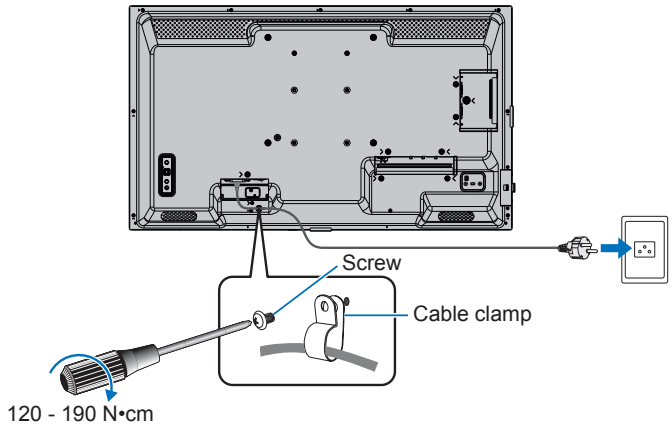

Supplied Components

If any components are missing, please contact your dealer.

- ☐ LCD monitor: 1
- ☐ Remote control unit: 1
- ☐ Cable clamp: 1
- ☐ Screw (M4): 1
- ☐ Power cord
- ☐ Remote control unit battery*1: 2
- ☐ Setup Manual: 1
- ☐ HDMI cable: 1

*1: Depending on the country where the LCD monitor is shipped to, AAA batteries are not included in the box contents.

Please note: do not dispose of batteries in household waste for environmental protection. Follow the disposal instructions for your area.

Part Names

■Front View

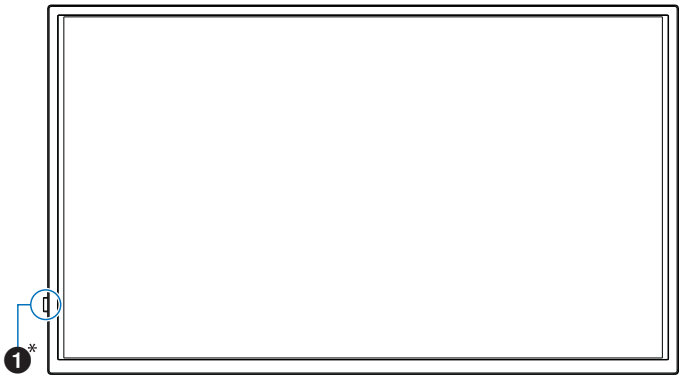

*** How to pull out the power LED/Remote control sensor**

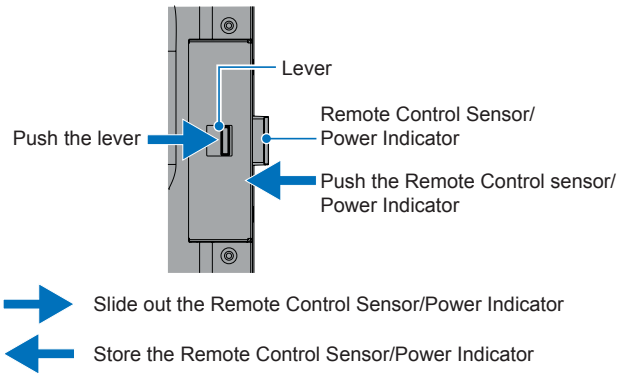

■Rear View

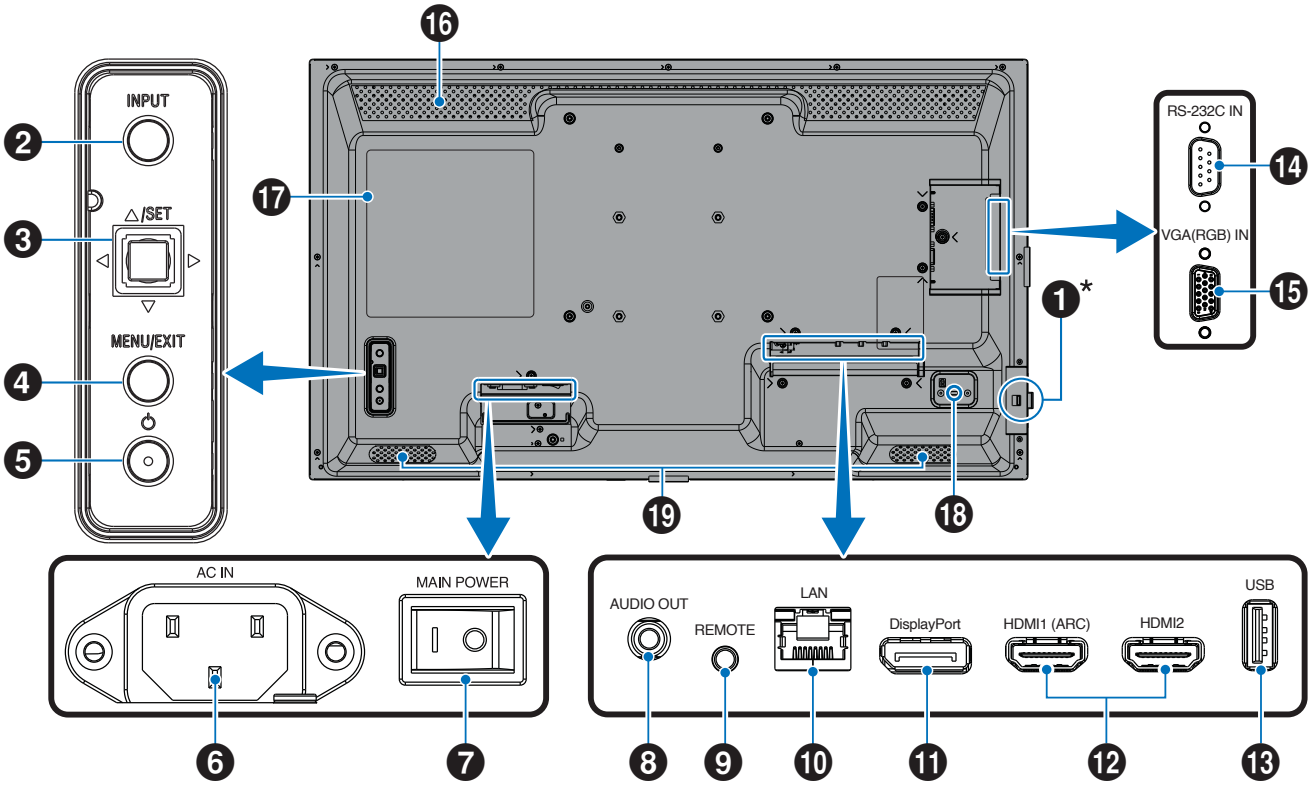

Part Names

❶ **Power LED (See page 25)/ Remote Control Sensor (See page 23)**

❷ **INPUT Button (See page 27)**

❸ **Joystick Key/SET Button (See page 27)**

❹ **MENU/EXIT Button (See page 27)**

❺ **Power Button (See page 27)**

❻ **AC input terminal (See page 21)**

❼ **Main Power Switch (See page 24)**

❽ **Audio output terminal (See page 19)**

❾ **REMOTE input terminal (See page 19)**

❿ **LAN terminal (See page 19)**

⓫ **DisplayPort input terminal (See page 19)**

⓬ **HDMI 1/2 input terminal (HDMI1 (ARC)/HDMI2) (See page 20)**

⓭ **USB Type-A port (See page 20)**

⓮ **RS-232C input terminal (See page 20)**

⓯ **VGA(RGB) input terminal (mini D-sub 15-pin) (See page 20)**

⓰ **Vents**

⓱ **Label**

⓲ **Security Slot**

Kensington compatible slot designed for physical security and theft protection.

⓳ **Internal Speakers**

■Remote control unit

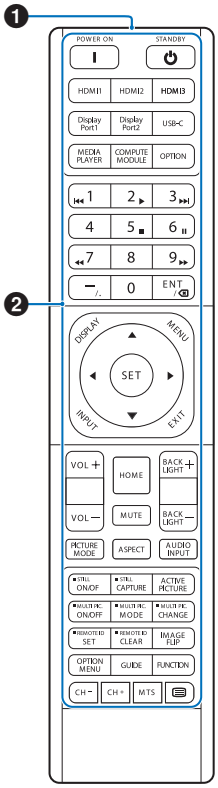

❶ **Signal transmitter**

❷ **Operation buttons (See page 27)**

Connecting Peripheral Equipment

■Rear View

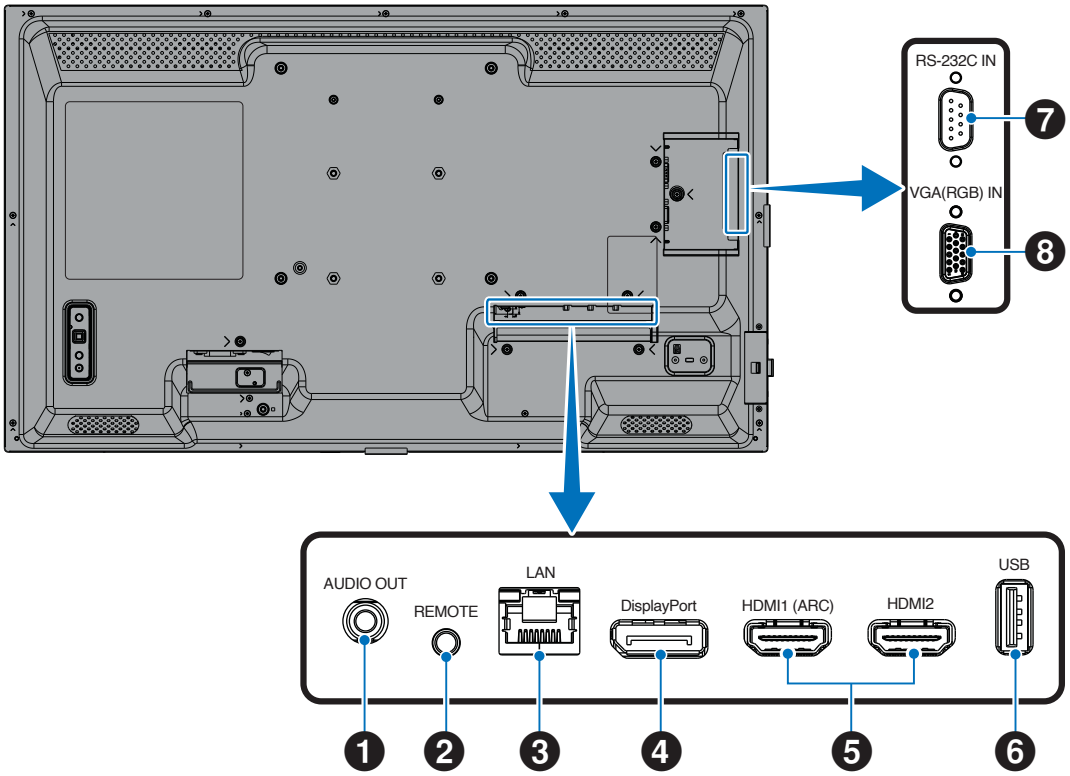

TIP: Before making connections:

- Turn off the device's power before connecting it to the monitor.
- Refer to the device's user manual for available connection types and instructions for the device.
- We recommend turning off the monitor's main power before connecting or disconnecting a USB flash drive to avoid data corruption.
- Check the USB flash drive for viruses as necessary.

❶ Audio output terminal

Audio signal output to an external device (stereo receiver, amplifier, etc.).

NOTE: This terminal is not a headphone terminal.

❷ REMOTE input terminal

Use an optional sensor unit by connecting it to your monitor.

NOTE: Do not use this terminal unless specified.

TIP:

- When the optional sensor unit is connected, the monitor's remote control sensor is disabled.
- For the remote control, please use the Remote control unit included with this monitor.

❸ LAN terminal (RJ-45)

Connect to LAN in order to manage and control the monitor over the network.

❹ DisplayPort input terminal

DisplayPort signals input.

❺ HDMI 1/2 input terminal (HDMI1 (ARC)/HDMI2)

HDMI signals input.

HDMI1 (ARC):

Also supports ARC (Audio Return Channel) for audio output.

ARC sends the monitor's sound to audio equipment with an HDMI1 (ARC) terminal.

HDMI2:

TIP:
- Use the included ARC-supported HDMI cable. The audio equipment will output the monitor's audio. The audio equipment can be controlled with the included Remote control unit.
- Please use an HDMI cable with the HDMI logo. When the input signal is 4K, please use high-speed HDMI cable.
- Some HDMI cables and devices may not show an image correctly due to different HDMI specifications.
- This monitor supports HDCP (High-bandwidth Digital Contents Protection) coding. HDCP is a system for preventing illegal copying of video data sent over a digital signal. If you are unable to view material via the digital inputs, this does not necessarily mean that the monitor is not functioning properly.
- Compatible signal list is on the page 72.

❻ USB Type-A port

USB 2.0 compliant.

Power supply: 5 V/2 A.

USB flash drive reader for use with the Media Player.

This connection can also be used by external USB devices (such as cameras, flash memory, keyboards, etc.).

NOTE:
- Do not bind the USB cable. It may trap heat and cause a fire.
- Please make sure the connector shape and orientation is correctly aligned when connecting the USB device or cable.
- Connecting/disconnecting a USB flash drive with the monitor already powered on is not recommended. To prevent damage to the monitor and possible corruption of the connected device's data files, the monitor's main power switch should be off before making connections or disconnections.

TIP:
- Format a USB flash drive in the NTFS/FAT16/FAT32 format. Refer to the computer's instruction user's manual or Help file on how to format a USB flash drive.
  If the monitor does not recognize a connected USB flash drive, make sure the file structure is NTFS/FAT16/FAT32.
- The monitor is not guaranteed to work with all USB flash drives sold commercially.
- The Power Delivery function is not guaranteed to work with all devices. Please check the connected device's user manual and specifications for its power capabilities and requirements.

❼ RS-232C input terminal (D-Sub 9-pin)

Connect RS-232C input from external equipment, such as a computer, in order to control RS-232C functions.
See page 59.

❽ VGA(RGB) input terminal (mini D-sub 15-pin)

Analog RGB signals input from a personal computer or from other RGB equipment.

To maintain compliance with EMC regulations, use shielded cables to connect to the following terminals: HDMI input terminal, DisplayPort input terminal, USB port, RS-232C input terminal, VGA(RGB) input terminal.

TIP:
- Do not connect or disconnect cables when turning on the monitor's main power or other external equipment's power as this may result in loss of image.
- Do not use an attenuating (built-in resistor) audio cable. Using an audio cable with a built-in resistor will lower the sound level.

Connecting the Power Cord

1. **Plug the power cord (supplied) into the AC input terminal.**
2. **Plug the power cord (supplied) into the power outlet.**
3. **Clamp the power cord (supplied) by using the supplied cable clamp.**

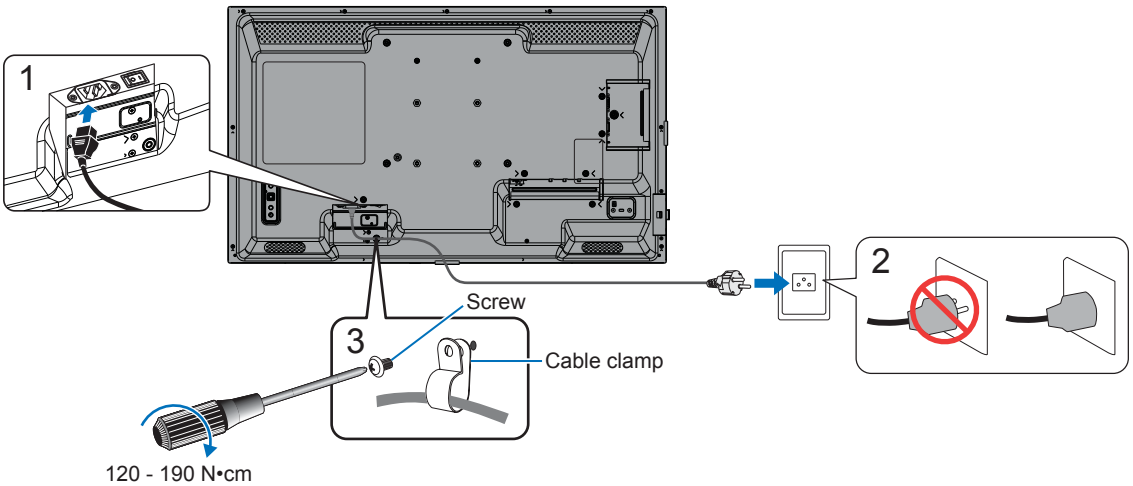

NOTE:
- Use only the power cord supplied with the monitor.
- When connecting the power cord to the product's AC input terminal, make sure the connector is fully and firmly inserted.
- Please make sure that enough power is supplied to the monitor. Please refer to the "Power requirement" in the specification (See "Product Specifications" on page 73).
- Be sure to clamp the power cord (supplied) by using the supplied cable clamp. When clamping the power cord, take care not to stress the terminal of the power cord. Do not bend the power cord excessively.

Preparing the Remote Control Unit

Installing the batteries

The Remote control unit is powered by two 1.5 V AAA batteries.

To install or replace batteries:

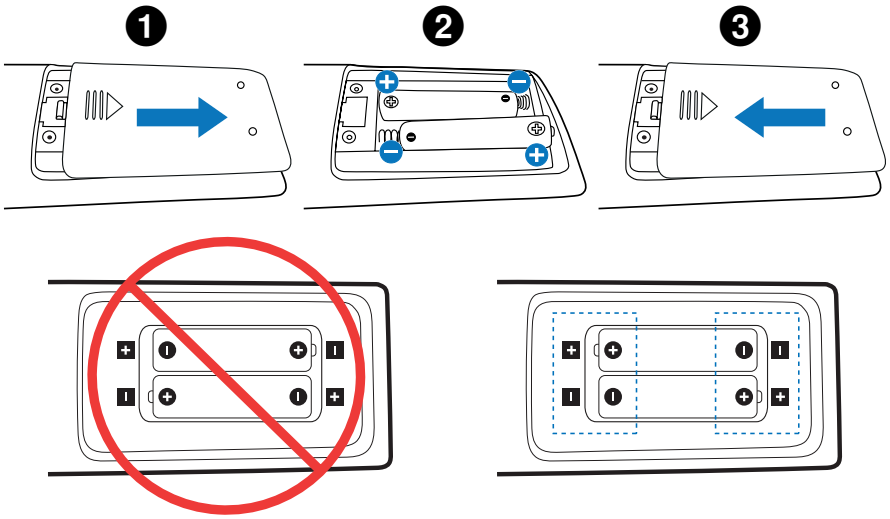

NOTE:
- If you do not intend to use the Remote control unit for a long period of time, remove the batteries.
- Use manganese or alkaline batteries only.

Remote control operation range

Point the top of the Remote control unit toward the monitor's remote control sensor during button operation.

Operating range in landscape orientation

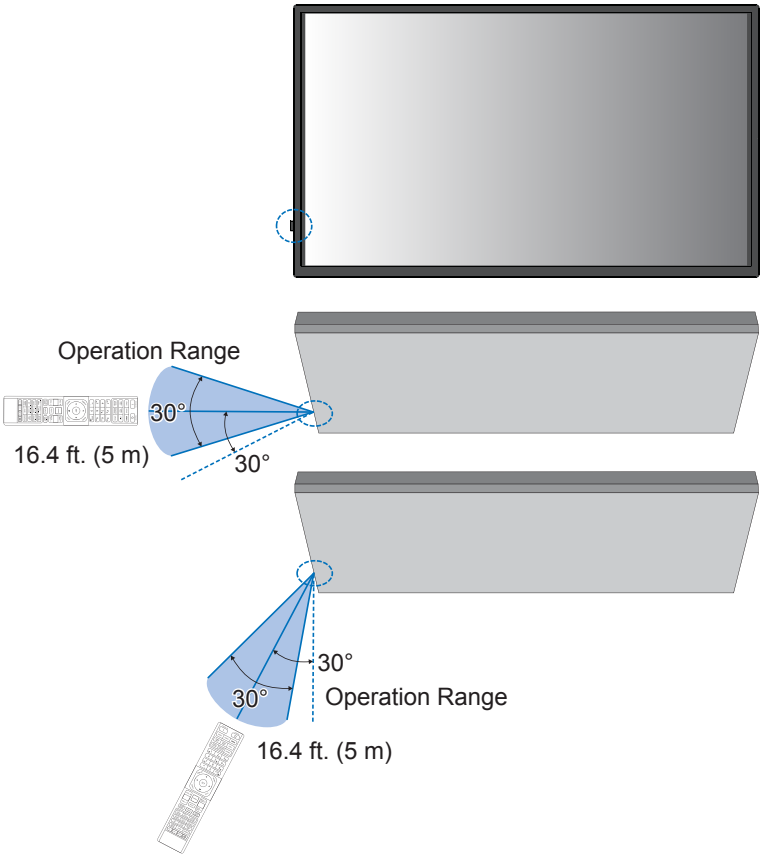

Operating range in portrait orientation

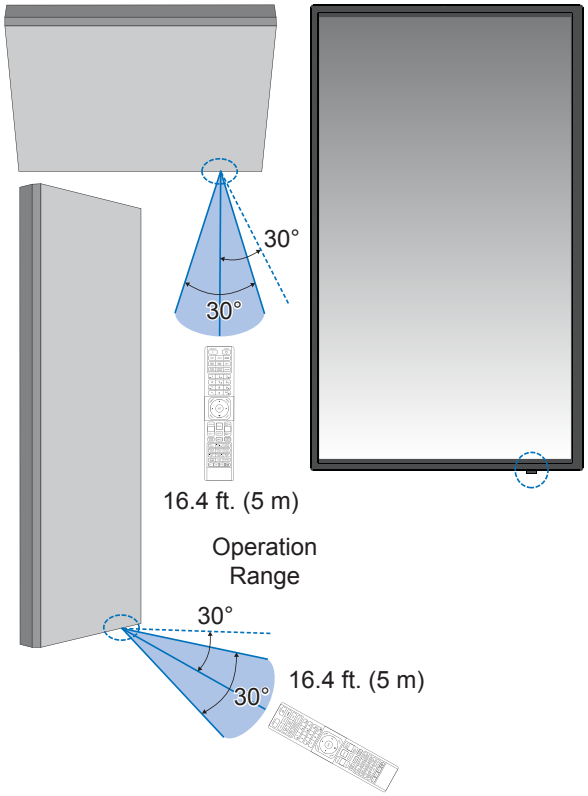

Handling the Remote control unit

- Do not expose to strong shock.
- Do not allow water or other liquid to splash on the Remote control unit.
  If the Remote control unit gets wet, wipe it dry immediately.
- Avoid exposure to heat and steam.
- Except to install the batteries, do not open the Remote control unit.

NOTE: If the Remote control unit is not functioning, please check below:

- The batteries may be drained. Please change the batteries, then check if the Remote control unit works.
- Check that the batteries are inserted correctly.
- Check that the Remote control unit is pointing at the remote control sensor of the monitor.
- Check the status of [LOCK SETTINGS]. See page 54.
- The remote control system may not function when direct sunlight or strong illumination strikes the remote control sensor of the monitor, or when there is an object in the path.

Turning Power On/Off

Turning on the main power

Make sure that the main power switch is turned on (|).

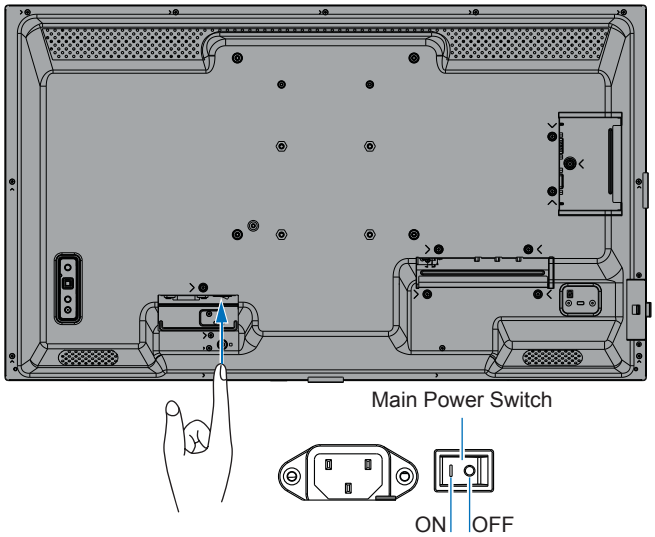

Turning power on

1. Press the POWER button or MONITOR ON button to turn the power ON.

The Main Power switch must be in the ON position in order to power up the monitor using the POWER button on the Remote control unit or on the monitor.

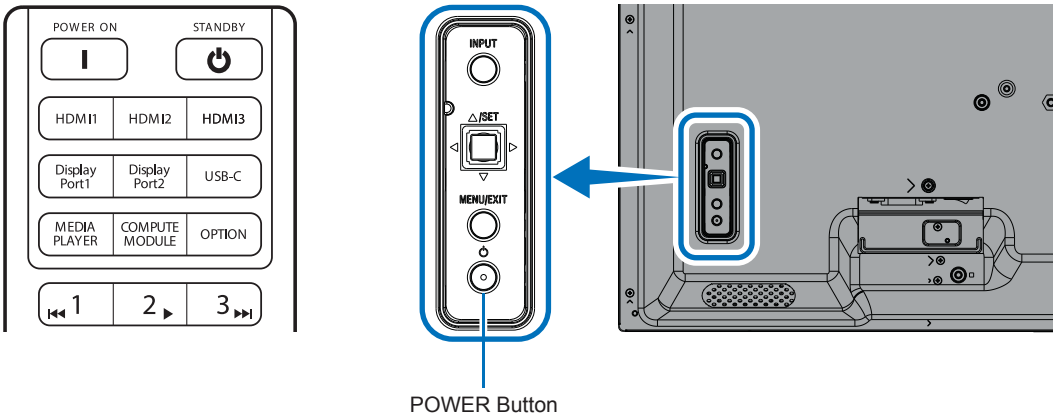

■Operations after first power-on

When you turn on the power for the first time, the initial setting screen appears. Navigate the cursor to [Start] using the ▲/▼ buttons on the Remote control unit and press the SET button to start. Configure the initial settings, such as setting the language, date and time, etc.

Turning power off

1. **Press the POWER button again on the monitor or press the STANDBY button on the Remote control unit. The power is turned off. (Standby state)**

Power ON and OFF

Press the Power button on the monitor or on the Remote control unit to turn on the monitor.

The monitor's power LED indicates the current status of the monitor. Please refer to the following table for information about the power LED.

Power LED lighting pattern	Status of the monitor		Recovery
Glowing blue	Power on	Normal	
Blinking green*1	Input signal waiting mode	Under any of the conditions below, no input signal has been detected by the monitor during the period of time*2 you set: • [AUTO INPUT CHANGE] is set to a setting except for [NONE]. • [USB POWER] is set to [ON]. • [QUICK START] is set to [ENABLE].	1. Turn on the monitor using the remote control or the monitor button. 2. Send an AV signal input to the monitor. 3. Disconnect and reconnect a signal cable.
Glowing amber*1 (Networked standby mode)		Occurs when the conditions of the green blinking status are not met. Under any of the conditions below, no input signal has been detected by the monitor during the period of time*2 you set: • A network signal input is present and [LAN] is set to [CONTROL TERMINAL] under [EXTERNAL CONTROL] in [SYSTEM]. • [CEC] is set to a setting except for [OFF]. • [OFF TIMER] is set to [ON]. • [SCHEDULE INFORMATION] function is enabled.	1. Turn on the monitor using the remote control or the monitor button. 2. Send an AV signal input to the monitor.*3 3. Disconnect and reconnect a signal cable.
Blinking amber*1 (Standby mode)		Occurs when the conditions of the green blinking status are not met. No AV signal input has been detected by the monitor during the period of time you set. (no network signal input [RS-232C] is set to [CONTROL TERMINAL] under [EXTERNAL CONTROL] in [SYSTEM]).	
Glowing red	Power off	Turn off the monitor by the remote control or the monitor button.	1. Turn on the monitor using the remote control or the monitor button.

*1: [POWER SAVE] is set to [ENABLE].
*2: Time setting for auto power save is available at [POWER SAVE SETTINGS] (See page 42).
*3: [MODE] in [POWER SAVE SETTINGS] is set to [NORMAL] for HDMI and DisplayPort.

TIP:
- The blue power LED that the monitor is powered on and functioning normally can be turned off in the monitor's OSD menu options. See page 46.
- The power LED blinking green and amber alternately when the [SCHEDULE INFORMATION] function is enabled.
- When the main power switch is turned off while in standby state, the monitor will be in standby mode with a blue blinking power LED when turned on again.

Turning Power On/Off

NOTE:
- When a component failure is detected within the monitor, the power LED will blink red or blink a combination of red and blue.
- The backlight used for this monitor has a limited life and its brightness decreases with the usage time.
- Do not display a still picture for a long period, as this could cause a residual image.

  To avoid shortening this monitor's lifetime, please note the following:
  - Turn off the monitor's main power switch when not in use.
  - Use the Power button on the monitor or the STANDBY button on the Remote control unit to put the unit in standby state.
  - Use [POWER SAVE SETTINGS] in the [PROTECT] OSD menu. When there is no input signal the monitor will automatically switch to power save mode.
  - Use [SCHEDULE INFORMATION] in the OSD menu to automatically control the monitor's on and standby power states as required. When using the schedule function, set [DATE & TIME] in the [SYSTEM] OSD menu.

Using Power Management

This function decreases the power consumption of the monitor when it is not in use.

When connected to a computer, power consumption by the monitor reduces automatically if the keyboard or mouse are not used during the time set in the computer's power management settings. Refer to your computer's user manual for more information.

When connected to an AV source, such as a Blu-ray, DVD, or streaming video player, power consumption by the monitor reduces automatically after a certain amount of time has passed since the monitor recognized "no signal input". This option is set to [ENABLE] or [DISABLE] in the [POWER SAVE] settings under the [POWER SAVE SETTINGS] menu of the OSD. See page 42.

TIP:
- Depending on the computer and display card used, this function may not operate.
- After the video signal is lost, the monitor automatically turns off after a preset time period. Please refer to the [TIME SETTING] in [POWER SAVE SETTINGS]. See page 42.
- Schedules can be created for the monitor to power on or standby state at specific times. See page 51.
- Please refer to the [POWER SAVE] in [POWER SAVE SETTINGS] for the power management function.

Basic Operation

Using the button and key

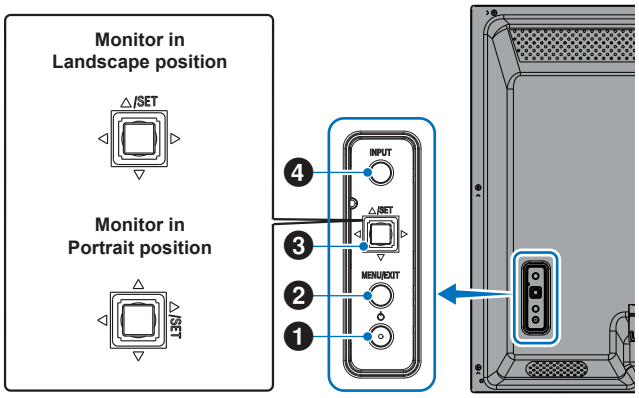

❶ Power Button

Switches between power on and standby state. Push the button twice to shift to standby state.

❷ MENU/EXIT Button

- Opens the OSD menu when the OSD menu is closed.
- Acts as a back button within the OSD menu to move to the previous OSD menu.
- Acts as an exit button to close the OSD menu when on the main menu.

❸ Joystick Key/SET Button*3

◁/▷: Left/Right control.

- Navigates to the left or right through the OSD Control menus.
- Increases or decreases adjustments for individual OSD settings.
- Directly adjusts the VOLUME when the OSD menu is closed.

▽/△: Up/Down control.

- Navigates up or down through the OSD Control menus.

SET: (button press)

- Selects, or sets the setting for, the highlighted function in the OSD menu.

*3: The ◁, ▷, △ and ▽ functions change according to the monitor orientation (landscape/portrait).

❹ INPUT Button

INPUT: Cycles through the available inputs when the OSD menu is closed.

[DisplayPort], [HDMI1], [HDMI2], [VGA(RGB)], [Media Player]. Input names are shown as their factory preset name.

Using the remote control unit

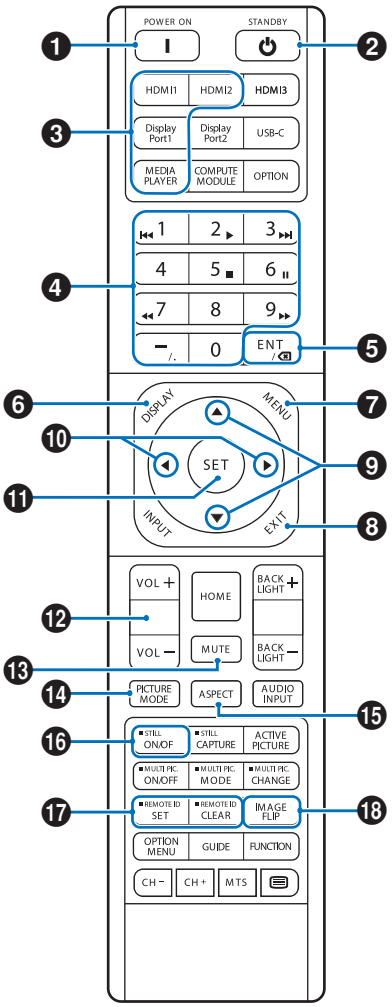

TIP:

- The buttons with no explanation are not used with your monitor model.
- Some Remote control unit buttons are used for CEC (Consumer Electronics Control).
  See page 34.
- Unlocks the Remote control unit's buttons if they have been locked in the [LOCK SETTINGS] in the [PROTECT] menu.
  Press and hold the DISPLAY button for more than five seconds to unlock the remote.
  See page 54.

❶ POWER

POWER resumes full power from low power mode.

❷ STANDBY

STANDBY puts the monitor in low power mode.
See page 25.

❸ DIRECT INPUT

Immediately changes the input to the one named on the button.

The button names reflect the factory preset name for the input.

TIP: • For VGA(RGB) input, please press INPUT button and set the [VGA(RGB)] at [INPUT SELECT].

❹ Numeric input Buttons

Press the buttons to set and change passwords in [SECURITY SETTINGS], IP address, the channel, and set the REMOTE ID. See page 56.

Some buttons are used for the CEC and the Media Player function (see page 47).

❺ ENT Button

Used for CEC (Consumer Electronics Control).
See page 34.

❻ DISPLAY

Shows/Hides the information OSD.

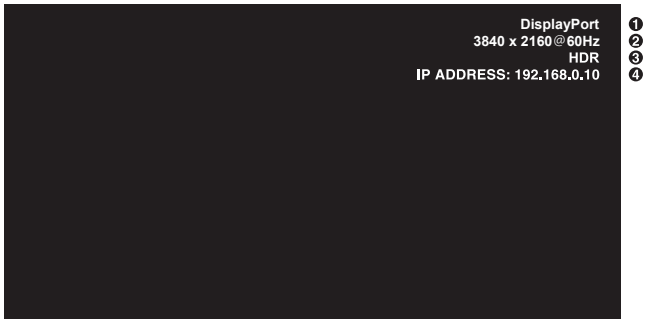

① Input name

② Input Signal Information

③ HDR Information

④ Communication Info*

* Shows when [COMMUNICATION INFO] is [ON].
Green: Connected LAN
Red: Not connected LAN

❼ MENU

Opens and closes the OSD menu. See page 32.

❽ EXIT

Acts as a back button within the OSD to move to the previous OSD menu.

Acts as an EXIT button to close the OSD menu when on the main menu.

❾ ▲/▼ (up/down)

Acts as navigation buttons, within the OSD and Media Player menus, to move the highlighted area up or down.

❿ ◀/▶ (left/right)

Acts as navigation buttons, within the OSD and Media Player menus, to move the highlighted area left or right.

Increases or decreases the adjustment level within the selected OSD menu setting.

⓫ SET

When the OSD menu is open, this button acts as a set button when you make a selection.

⓬ VOL +/–

Increases or decreases the audio output level.

⓭ MUTE

Mutes the monitor's audio and video output.

Press it again to unmute the monitor's audio and video output. See "MUTE SETTING*1" on page 46 for details.

⓮ PICTURE MODE

Cycles through the picture modes [NATIVE], [RETAIL], [CONFERENCING], [HIGHBRIGHT], [TRANSPORTATION] and [CUSTOM]. See page 35.

PICTURE MODE	PURPOSE
NATIVE	Standard setting.
RETAIL	Bright, vivid colors ideal for advertising and branding.
CONFERENCING	Lower color temperature and optimized for natural human complexions.
HIGHBRIGHT	Maximum backlight brightness with higher color temperature for brighter ambient environments.
TRANSPORTATION	Maximum backlight brightness with high contrast to read text under all conditions.
CUSTOM	Custom setting.

TIP: • Changing any of the settings of the [PICTURE MODE] in the OSD menu will change the settings for the current input only.

⓯ ASPECT

Cycles through the picture aspect ratios [FULL], [WIDE], [1:1], [ZOOM] and [NORMAL]. See page 30.

NOTE: [Media Player] is not available.

⑯ STILL

ON/OFF: Activates/deactivates still picture mode.

⑰ REMOTE ID

Activates the REMOTE ID function. See page 56.

⑱ IMAGE FLIP

Changes the orientation of the image. See page 39.

■Setting the Aspect Ratio

Press the ASPECT button on the Remote control unit to cycle through the options available for the current input signal.

NOTE: [Media Player] is not available.

[FULL] ➔ [WIDE] ➔ [1:1] ➔ [ZOOM] ➔ [NORMAL]

Aspect ratio of image	Unchanged view*3	Recommended selection for picture aspect*3		Description
4:3	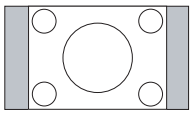	[Normal]	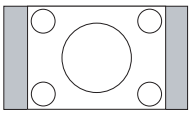	Reproduces the aspect ratio that is sent from the source.
Squeeze	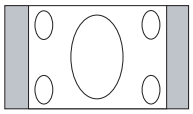	[Full]	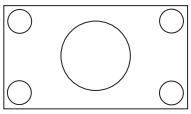	Fills the entire screen.
Letterbox	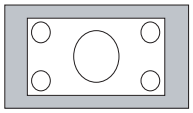	[Wide]	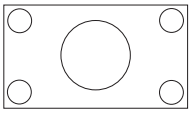	Expands a 16:9 letter box signal to fill the entire screen.

*3: Gray areas indicate unused portions of the screen.

[1:1]: Shows the image in a 1 by 1 pixel format.

[ZOOM]: The zoom function increases the image size, which expands the image beyond the active screen area. The parts of the image outside the active screen area are not shown.

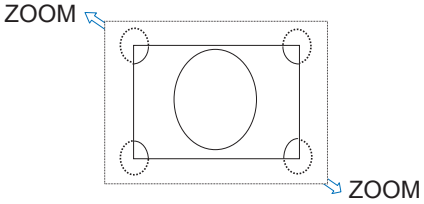

Menu Items

Opening the menu window

The monitor's menu allows you to directly adjust its various settings, including brightness, contrast, color adjustments, input, and more. This section explains how to navigate the menu and make selections.
For descriptions of the menu items for this product, see page 32.

■Menu screen

NOTE: Some menus may not be available depending on the model or optional equipment.

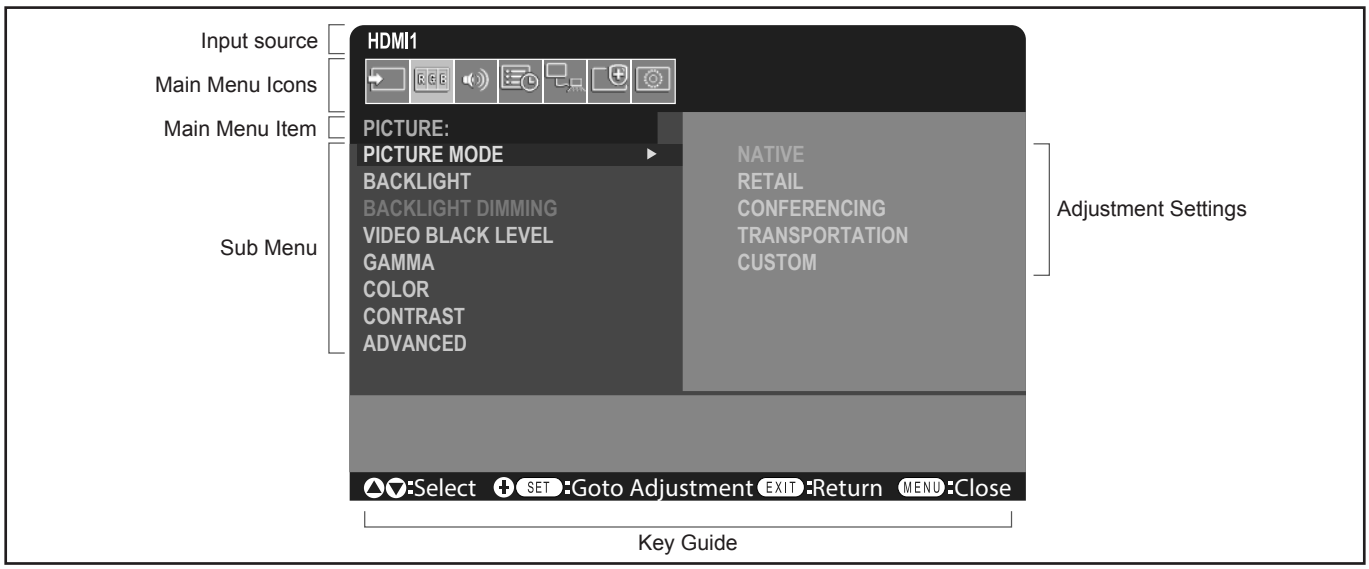

■Example of an operation

Navigating the menu for selecting the PICTURE MODE.

1. Press the MENU button to open the menu screen.

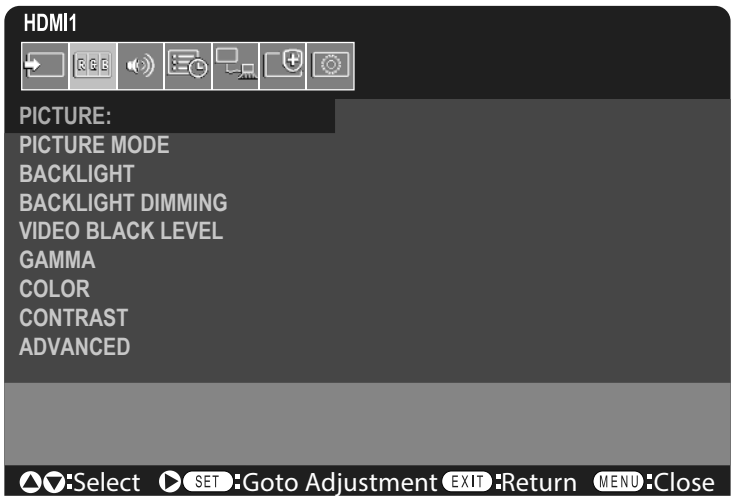

2. Press the ▲ or ▼ button to select the PICTURE icon, and press the SET button.

3. **Press the ▲ or ▼ button to select [PICTURE MODE], and press the SET button.**

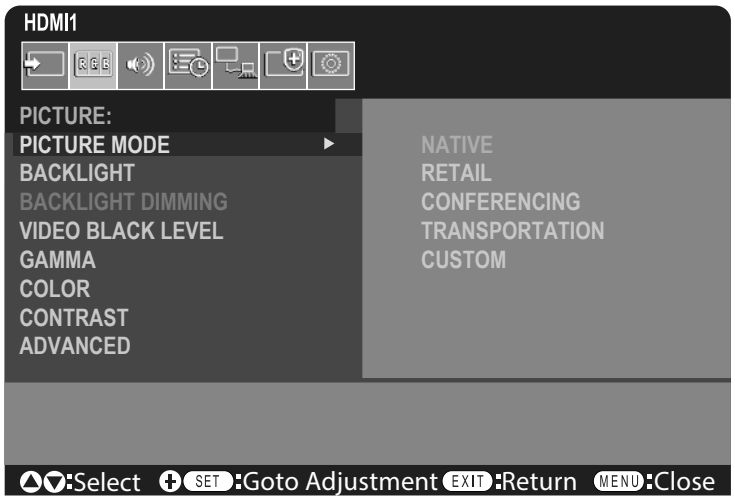

4. **Press the ► button to select [NATIVE], and press the SET button.**
5. **Press the MENU button to close the menu screen.**

TIP: • The menu screen will close automatically if no operation is performed for about three minutes.

Menu item details

The settings below are recommended settings and conform to the “Normal Configuration” as defined in the EcoDesign Regulation (2019/2021).

- [POWER SAVE] is set to [ENABLE].
- [USB-POWER] is set to [AUTO].
- [POWER SAVE MESSAGE] is set to [ON].
- [QUICK START] is set to [DISABLE].
- [HUMAN SENSING] is set to [DISABLE].

Due to the various possibilities to save energy, the different power modes are named as “standby state”.
“Standby state” means “standby mode” or “networked standby mode” if the recommended settings are used.
The monitor enters into “standby mode” if you use the recommended setting and haven’t connected a LAN network. Using the recommended setting with an active LAN connection, “standby state” means “networked standby mode”.

■INPUT

INPUT SELECT*5

Selects the input signals source.
DisplayPort, HDMI1, HDMI2, VGA(RGB) or Media Player.

INPUT SETTINGS

INPUT NAME*5

Custom names with a maximum of 14 characters, including spaces, can be set. The characters can be a mix of letters (A-Z), numbers (0-9), and some symbols.

To rename the input:

1. **Highlight the name field. Press SET on the Remote control unit to activate the field.**
2. **Use the ◄/► buttons to navigate to the character you want to change.**
   Press the ▲/▼ buttons to cycle through the available characters (A-Z, 0-9, special characters, and space).
3. **Press the SET button when on a letter to switch between uppercase and lowercase.**
4. **Press EXIT to save the name and exit the name field.**

TIP: The INPUT NAME can be easily changed with the HTTP server (see page 62).

NAME RESET*5

Returns the current input name to its factory default. Highlight [PROCEED] and press SET on the Remote control unit to reset the input name. Options are: PROCEED/CANCEL.

AUTO INPUT CHANGE*1, *3, *4

This function automatically selects the input terminal with an input signal.

When enabled, this option can detect and change inputs when a signal is applied or lost. Allows for customization of the input priority.

TIP: When [HUMAN SENSING] is enabled, this function is deactivated.

NONE ..... The monitor does not search for video signal on the other input connections.
If video signal is lost on the current input, or if the monitor is manually switched to an input that does not have video signal, the screen will go black. If [POWER SAVE] is enabled, the monitor will enter power saving mode after the period of time set for [POWER SAVE] has passed.

FIRST DETECT*2 ..... The monitor does not search for a video signal on the other input connections while the current input has a video signal.
If the current input connection does not have video signal present, the monitor will search for video signal on the other video input connections. If a video signal is found, the monitor will switch from the current input to the input with the active video source automatically.

LAST DETECT*2..... The monitor actively searches for a video signal on the other input connections, even while the current video signal is present. When a new video signal source is applied to another input connection, the monitor automatically switches to the newly found video source.
If the video signal is lost on the current input connection, the monitor will search for video signal on the other video input connections. If a video signal is found, the monitor will switch from the current input to the input with the active video source automatically.

CUSTOM DETECT..... The monitor only searches for video signal on the inputs selected for the priority numbers. If the signal is lost, the monitor searches for signal in the priority order and automatically switches to the highest priority input it finds with an active video signal. The monitor actively searches these inputs. If the current signal input is not Priority 1 and a new signal is applied to the input assigned to Priority 1, the monitor will automatically switch to the higher priority input.

TIP:
- If you select [CUSTOM DETECT], you cannot switch to an input signal for which [PRIORITY] has not been set.
- [Media Player] will only work when a USB flash drive is connected.

ADVANCED

INPUT SIGNAL SETTINGS

Configure settings specific to the video input terminal.

HDMI*5

Selects the type of HDMI mode (version) [MODE1] or [MODE2].

MODE1..... Max resolution is 3840 x 2160 (30 Hz).

MODE2..... Max resolution is 3840 x 2160 (60 Hz); supports HDCP 2.2 and HDR.

Media Player

AUTO PLAY

Configures the autoplay settings for the Media Player.

OFF ..... Does not automatically play any files.

PHOTO..... Automatically plays picture (still image) files.

MUSIC..... Automatically plays music files.

MOVIE..... Automatically plays video files.

When using any setting other than [OFF], play files in the USB flash drive's "AUTO_PLAY" folder automatically in the following cases:

- When the power is turned off and on with [Media Player] set as the input signal.
- When the [INPUT SELECT] is [Media Player].

TIP:
- Playback is in order of file name; in priority first numerically (ascending order), then alphabetically (ascending order).
- Using this setting in conjunction with [AUTO INPUT CHANGE], the system switches to "Media Player" and automatically plays the selected file when the input signal is lost.

OVERSCAN*3, *5

AUTO: Image size is set automatically.

ON: The image is scaled to best fit the screen without changing the aspect ratio. Some images will have cropped edges. Approximately 95 % of the image will be shown on the screen.

OFF: The whole image is shown within the screen area. This setting may cause a distorted image at the edges.

TIP: When you use a computer with HDMI out, please set [OFF].

VIDEO RANGE*2, *3, *4, *5

Adjust the gradation range to be shown according to the video signal to improve the whiteout and blackout of the image.

AUTO: Automatically sets input signals by adjusting connected equipment.

RAW SIGNAL: For computer settings. Show all input signals of 0-255 gray levels.

EXPANDED SIGNAL: For audio-visual equipment settings. Expands the input signals from 16-235 gray levels to 0-255 gray levels.

TIP:
- This function is available only in [HDMI] or [DisplayPort] and is selected at [INPUT SIGNAL].
- Depending on the connected device, the gradation range may not display correctly. In this case, change the setting to [RAW SIGNAL] or [EXPANDED SIGNAL].

CEC

Provides CEC (Consumer Electronics Control) compatible media players, connected via HDMI, the ability to communicate and allows limited control between the device and the monitor. Only available for HDMI inputs.

CEC

When [MODE1] or [MODE2] is selected, the following functions are automatically activated:

Also, when the compatible device is started from a standby state, this unit also works together to turn on the power from a standby state.

- When a connected CEC media device plays, the monitor will turn on and/or change to the HDMI input with the connected media device.
- The monitor's Remote control unit can be used to control some of the media player device functions.

When [MODE1] is selected, the Remote control unit CEC functions are:
1, 2, 3, 5, 6, ENT, EXIT, ▲, ▼, ◀, ▶, MUTE, VOL+, VOL–.

When [MODE2] is selected, the Remote control unit CEC functions are:
0 to 9 and – on the keypad, ENT, EXIT, ▲, ▼, ◀, ▶, GUIDE, MUTE, SET, VOL+, VOL–, CH–, CH+.

Depending on the type of the connected device, the CEC functions may not work as described.

Not all manufacturers provide the same level of CEC integration and control, or they may only provide support for their products.

AUDIO RECEIVER

ENABLE: The monitor's internal speaker is muted and connected audio equipment with ARC function outputs the sound.

DISABLE: Connected audio equipment with ARC function is muted and the monitor's internal speaker outputs the sound.

TIP: It may take a while to output the sound when changing [AUDIO RECEIVER] settings, but this is not a failure of the monitor.

SEARCH DEVICE

Searches the HDMI input for a connected HDMI-CEC compatible device. If a device is found, the connected HDMI-CEC compatible device's type and registered device name are shown.

After detecting HDMI-CEC compatible devices, you can switch the device input by selecting the device.

TIP: In some situations, the entire text of the registered name and device type may not fully show. In this case, please note the device by both the device type and registered name connected to an input.

SIGNAL FORMAT*3, *4, *5

Selects the color space setting from AUTO, RGB, YCbCr (BT.601), YCbCr (BT.709), YCbCr (BT.2020) for the HDMI/DisplayPort signal.

TIP: Depending on the connected device, colors may not display correctly. In this case, change the [SIGNAL FORMAT] setting to a selection other than [AUTO].

SIDE BORDER COLOR*2, *5

Adjusts the color of the borders that show when an image does not fill the entire screen.
Press the ▶ button to make the borders lighter, the level can be increased until the color is white.
Press the ◀ button to make the borders darker, the level can be decreased until the color is black.

RESET*5

Resets all input menu settings back to factory settings except for [INPUT NAME] and [AUTO INPUT CHANGE].

*1: Depending on the device, it may not be detected correctly.
*2: Except for Media Player.
*3: Except for VGA(RGB) input.
*4: YPbPr signal only.
*5: This option is shown and enables for setting only when [LANDSCAPE] is set to [OSD ROTATION].

■PICTURE

PICTURE MODE

Provides pre-configured picture settings suitable for various environments where this device may be used, or customize settings to viewer preference. See page 28.

BACKLIGHT

Adjusts the overall image and background brightness. Press ◀ or ▶ to adjust.

TIP: • When [MODE1] or [MODE2] is selected in [AMBIENT LIGHT SENSING] at [ADVANCED], this function cannot be changed.

BACKLIGHT DIMMING

This function is not available.

VIDEO BLACK LEVEL

Adjusts the black luminance.

GAMMA*5

NATIVE..... Gamma correction is handled by the LCD panel.
2.2..... Typical monitor gamma for use with a computer.
2.4..... Typical gamma settings for use with videos, such as DVDs and Blu-rays.
S GAMMA..... Special gamma for certain types of movies. Raises the light parts and lowers the dark parts of the image (S-Curve).
DICOM SIM. ..... DICOM GSDF curve simulated for LCD type.
NOTE: Do not use for diagnostic purposes.
PROGRAMMABLE1, 2, 3..... A programmable gamma curve can be loaded using our optional software.

Menu Items

COLOR*5

COLOR*4 ..... Adjusts the color saturation of the screen. Press ◀ or ▶ button to adjust.

COLOR TEMP ..... Adjusts the color temperature of the entire screen. A low color temperature will result in a reddish screen. A high color temperature will make the screen bluish.

If TEMPERATURE needs further adjustment, the individual R/G/B GAIN levels of the white point can be adjusted. Use the sliders for the individual R/G/B GAIN levels to adjust the color temperature.

TIP: When [PROGRAMMABLE1], [PROGRAMMABLE2] or [PROGRAMMABLE3] is selected in [GAMMA], this function cannot be changed.

COLOR CONTROL ..... Adjusts the hue of the Red, Yellow, Green, Cyan, Blue and Magenta colors individually. For example, you can change red to yellow or purple.

CONTRAST*4, *5

Adjusts the image brightness in relationship to the input signal. Press ◀ or ▶ button to adjust.

ADJUST*5 VGA(RGB) input only

AUTO SETUP

Automatically adjusts Screen Size, H position, V position, Clock, Phase and White Level.

AUTO ADJUST

[H POSITION], [V POSITION] and [PHASE] are adjusted automatically when new timing is detected.

TIP:
- Depending on the display card or drivers used, the image may not be adjusted correctly.
  In this case, please run [AUTO SETUP], or individually set [H POSITION], [V POSITION], [CLOCK], and [PHASE].
- When [AUTO ADJUST] is [ON], if the screen position shifts repeatedly, please change the setting to [OFF].

H POSITION

Controls the horizontal position of the image within the display area of the LCD.
Press ▶ button to move right. Press ◀ button to move left.

V POSITION

Controls the vertical position of the image within the display area of the LCD.
Press ▶ button to move up. Press ◀ button to move down.

CLOCK

Press ▶ button to expand the width of the image on the right of the screen.
Press ◀ button to narrow the width of the image on the left of the screen.

PHASE

Adjusts the visual “noise” in the image.

H RESOLUTION

Adjusts the horizontal size of the image.

V RESOLUTION

Adjusts the vertical size of the image.

ADVANCED*5

HDR MODE*5 HDMI input only

When the monitor detects an HDR signal, you can select preferred gamma correction from [LOW], [MIDDLE] or [HIGH].

SHARPNESS*4, *5

Adjusts the crispness of the image. Press ◀ or ▶ button to adjust.

TIP: • Depending on the combination of the input resolution and the [ASPECT] setting, this function may not work.

ASPECT

Select the aspect ratio of the screen image.

TIP:
- When starting tile matrix in multi-monitor installations, if the [ASPECT] is [ZOOM] it will be changed to [FULL] before tile matrix starts. After tile matrix is complete, the aspect will return to [ZOOM].
- If you change [H POS] and [V POS] settings with a reduced image, the image will not be changed.
- If the [ASPECT] is [ZOOM] while tile matrix is active, when tile matrix is released, the [ASPECT] will be [ZOOM].
- The [ASPECT] automatically changes to [FULL] when the [SCREEN SAVER] starts. When the [SCREEN SAVER] stops, the [ASPECT] returns to its previous setting.
- This function is not available when [MOTION] in [SCREEN SAVER] is active.
- [ZOOM] is not available for an image with an input resolution of 4K.

NORMAL ..... Shows the aspect ratio as it is sent from the source.
FULL..... Fills the entire screen.
WIDE ..... Expands a 16:9 letterbox signal to fill the entire screen.
1:1..... Shows the image in a 1 by 1 Pixel format. (If the input resolution is higher than the recommended resolution, the image will be scaled down to fit the screen).
ZOOM..... Expands/reduces the image.

TIP: • The areas of the expanded image that are outside of the active screen area are not shown. The reduced image may have some image degradation.

ZOOM: Maintains the aspect ratio while zooming.
HZOOM: Horizontal zoom value.
VZOOM: Vertical zoom value.
H POS: Horizontal position.
V POS: Vertical position.

ADAPTIVE CONTRAST*3, *4, *5

Sets the level of adjustment for dynamic contrast.
If [HIGH] is set, the image is shown clearly but it makes brightness unstable due to the wide gap in contrast variation.

AUTO DIMMING

Adjusts the backlight of the LCD automatically depending on the amount of ambient light.

AUTO BRIGHTNESS*5.....Adjusts the brightness level according to the input signal.

TIP: • When [MODE1] or [MODE2] is selected in [AMBIENT LIGHT SENSING] at [ADVANCED], this function cannot be changed.

AMBIENT LIGHT SENSING*5 ...The backlight of the LCD panel can be set to increase or decrease depending on the amount of ambient light within the room. If the room is bright, the monitor becomes correspondingly bright.

If the room is dim, then the monitor will dim accordingly. The purpose of this function is to make the viewing experience more comfortable to the eye in a variety of lighting conditions.

The ambient parameter setting:

When [MODE1] or [MODE2] is set, set the [ILLUMINANCE] and the [BACKLIGHT].

IN BRIGHT: Setting to use in a bright room.
ILLUMINANCE - The illuminance level in a bright room.
BACKLIGHT - The maximum level of backlight in a bright room.

IN DARK: Setting to use in a dim room.
ILLUMINANCE - The illuminance level in a dim room.
BACKLIGHT - The minimum level of backlight in a dim room.

STATUS: Shows the current setting level of [ILLUMINANCE] and [BACKLIGHT].

When [MODE1] or [MODE2] is set, the Backlight level of the screen changes automatically according to the lighting conditions of the room (see figure below).

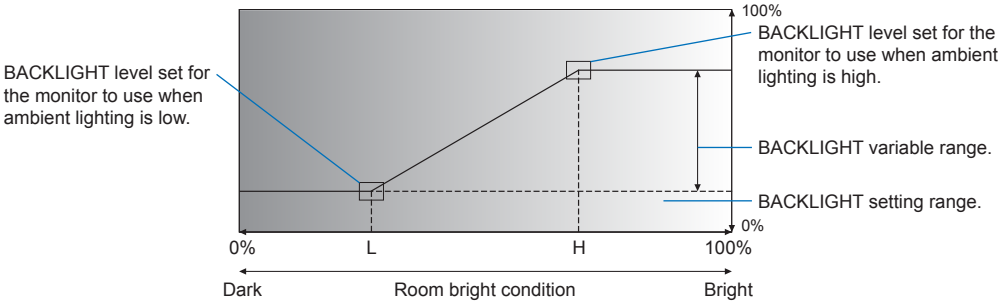

L - ILLUMINANCE level set for the monitor to use when ambient lighting is low.
H - ILLUMINANCE level set for the monitor to use when ambient lighting is high.

TIP:
- When setting to [MODE1] or [MODE2], [BACKLIGHT] cannot be changed.
- Setting to [MODE2] makes the background brightness even darker than [MODE1] when the backlight level is [0/100].
- When [ON] is selected in [AUTO BRIGHTNESS] at [ADVANCED], this function cannot be changed.
- Do not cover the optional sensor unit when [AMBIENT LIGHT SENSING] is enabled. [AMBIENT LIGHT SENSING] is enabled when it is set to [MODE1] or [MODE2].

HUMAN SENSING*1..... Automatically adjusts the backlight and volume levels based on whether or not a human presence is detected in front of the monitor.

TIP: If [AUTO INPUT CHANGE] is set to other than [NONE], this function is set to [DISABLE].

DISABLE: Human sensing function is off.

AUTO OFF: The monitor's backlight automatically turns off, and the volume mutes when no human presence is detected during the period set at [WAITING TIME].
When a person is near the monitor again, the monitor will automatically return to normal mode.

CUSTOM: The monitor's input signal, backlight and volume levels automatically shift to the setting at [INPUT SELECT], [BACKLIGHT] and [VOLUME] when no human presence is detected during the period set at [WAITING TIME].
When a person is near the monitor again, the monitor will automatically return the backlight and volume to normal levels and reproduce the input signal selected for [INPUT SELECT].

TIP:
- [VGA(RGB)] cannot be selected for [INPUT SELECT].

TILE MATRIX*2, *5

TILE MATRIX.....Allows one image to be expanded and shown over multiple screens (up to 100) through a distribution amplifier. This option is for manually configuring the TILE MATRIX settings.

TIP:
- Low resolution is not suitable for tiling to a large number of monitors.
- A distribution amplifier is required.
- These functions are not available when [TILE MATRIX] is active: [SCREEN SAVER] and STILL on the Remote control unit buttons.
- If [ZOOM] is the selected aspect setting, it functions as [FULL] aspect when the tile matrix is active. When the tile matrix deactivates, aspect changes to [ZOOM].

H MONITORS.....Number of monitors arranged horizontally.

V MONITORS.....Number of monitors arranged vertically.

POSITION .....Select the section of the tiled image to view on the current monitor.

TILE COMP .....Adjusts the image to compensate for the gap between monitors.
When activated, the image size and position can be adjusted by pressing the ◀ or ▶ button on the Remote control unit.

CONFIRM SETTINGS.....Starts the Tile Matrix.

IMAGE FLIP

IMAGE FLIP .....Changes the orientation of the image. Rotates the image 180 degrees.

RESET*5

Resets all PICTURE settings back to factory settings except for [PICTURE MODE].

*1: The function is available only when connecting the optional sensor unit.
*2: Except for Media Player.
*3: YPbPr signal only.
*4: Except for VGA(RGB).
*5: This option is shown and enables for setting only when [LANDSCAPE] is set to [OSD ROTATION].

■AUDIO

AUDIO MODE

Provides pre-configured audio settings suitable for various environments where this device may be used, or customize settings to viewer preference.

NATIVE..... Standard setting.
RETAIL ..... Surround sound for clarity of audio in retail stores.
CONFERENCING ..... Optimized settings for clarity of audio in conference rooms.
HIGHBRIGHT ..... Lowest volume level in order to focus on the visual message (audio is mute in factory setting).
TRANSPORTATION..... Lowest volume level in order to avoid disturbance in public spaces (audio is mute in factory setting).
CUSTOM ..... Customizable settings.

VOLUME*1

Increase or decrease output volume level.

BALANCE*1

STEREO/MONO.....Select [STEREO] or [MONO] for the audio output.

STEREO: Independent audio channels for routing audio signal. The sound balance between the monitor's left and right internal speakers can be adjusted.
Press the ◀ or ▶ button to move the audio signal to the left or right.

MONO: Audio signals are routed through a single audio channel. Balance cannot be adjusted and the slider will be unavailable.

SURROUND.....Artificially produces surround sound audio.

EQUALIZER*1

TREBLE.....Accentuates or reduces the high frequency range of audio signals.
Press the ◀ or ▶ button to increase or decrease [TREBLE].

BASS.....Accentuates or reduces the low frequency range of audio signals.
Press the ◀ or ▶ button to increase or decrease [BASS].

ADVANCED*1

LINE OUT

Selecting [VARIABLE] enables volume control of the audio signal on the Audio output terminal with the VOLUME button on the Remote control unit or ◁/▷ keys on the monitor.

INTERNAL SPEAKER

Sets the internal speaker on or off.

RESET

Resets all AUDIO settings back to factory settings except for [AUDIO MODE].

*1: This option is shown and enables for setting only when [LANDSCAPE] is set to [OSD ROTATION].

■SCHEDULE

SCHEDULE INFORMATION

Creates a working schedule for the monitor (see page 51).
Press the ▲, ▼, ◀, ▶ buttons to navigate and change the schedule settings. Press the SET button on the Remote control unit or Input change buttons on the monitor to select settings.

TIP:
- The [DATE & TIME] needs to be set before adding schedules.
- Schedules you configure are saved when exiting the [SCHEDULE INFORMATION] window.
- If multiple schedules are set to start at the same time, the conflicting schedule with the highest number is given priority.
- Schedules will not run when the [OFF TIMER] is set to [ON].
- Schedules do not run while the [SCHEDULE INFORMATION] menu is open.

SETTINGS

Highlight the number and press the SET button to activate the schedule. The box next to the number has a check when the schedule is enabled. Up to 14 schedules can be created and enabled. Press the ◀ or ▶ button to cycle through schedule numbers.

POWER

Sets the monitor's power state for the schedule. Select [ON] if you want the schedule to turn the monitor on at the specified time. Select [OFF] if you want the schedule to turn the monitor off at the specified time.

TIME

Set the start time for the schedule.

TIP: Fill in both fields for the TIME setting. If either field shows [--], the schedule does not run.

INPUT*1

Select which video input to use for the schedule. To keep the active input when the schedule starts, make sure the setting is [--].
If you select a specific input, set [ON] at [POWER].

DATE

Select [YEAR], [MONTH], [DAY] if the schedule is only going to run on one day or it is an irregular schedule.

EVERY WEEK

Select this option to have the schedule repeat every week.

OFF TIMER

Powers off the monitor after the time period shown next to the slider. Press the ◀ or ▶ button on the Remote control unit to adjust the timer from 1 to 24 hours.

TIP: Schedules do not run when the [OFF TIMER] is set to [ON].

RESET

Resets all SCHEDULE settings back to factory setting, except for [OFF TIMER].

*1: Except for VGA(RGB) input.

■NETWORK

NETWORK INFORMATION

Configures the monitor's network settings either automatically or manually.

IP SETTING

AUTO..... The IP address and other network settings are automatically obtained from the DHCP server.
MANUAL..... The network settings must be entered manually. Contact the Network Administrator for this information.

TIP: Consult your network administrator for the IP address when [MANUAL] is selected for [IP SETTING].

IP ADDRESS

Set the IP address for the monitor connected to the network when [MANUAL] is selected for [IP SETTING].

SUBNET MASK

Set the subnet mask data for the monitor connected to the network when [MANUAL] is selected for [IP SETTING].

DEFAULT GATEWAY

Set the default gateway for the monitor connected to the network when [MANUAL] is selected for [IP SETTING].

TIP: Enter [0.0.0.0] to delete the setting.

DNS

Set the IP addresses of DHCP servers.
AUTO..... The DNS server which is connected to the monitor will automatically assign its IP address.
MANUAL..... Manually enter the IP address of the DNS server which is connected to the monitor.

TIP: Consult your network administrator for the IP address when [MANUAL] is selected for [DNS].

DNS PRIMARY

Enter the primary DNS server settings of the network connected to the monitor.

TIP: Enter [0.0.0.0] to delete the setting.

DNS SECONDARY

Enter the secondary DNS server settings of the network connected to the monitor.

TIP: Enter [0.0.0.0] to delete the setting.

MAC ADDRESS

Shows the monitor's [MAC ADDRESS].

EXECUTE

Executes the network information settings.

NETWORK SECURITY*1

Individually enable or disable the networking component for monitor functions.

TIP: Please set [DISPLAY] to [ENABLE] when updating the firmware revision via the network.

DISPLAY

Enables or disables the network function for controlling the monitor remotely.
When disabled, these functions do not work: External Control, Mail, HTTP server, SNMP, AMX, PJLink.

APPLY

Apply the network security settings.

PING*1

Confirm successful connection with the network by communicating with a preset IP address.

IP ADDRESS

Sets an [IP ADDRESS] for sending [PING].

EXECUTE

Checks a reply can be sent to the monitor or not from the [IP ADDRESS] by sending [PING].

RESET*1

Resets all NETWORK settings back to factory setting, except for [NETWORK INFORMATION] and [PING].

*1: This option is shown and enables for setting only when [LANDSCAPE] is set to [OSD ROTATION].

■PROTECT

POWER SAVE SETTINGS*1

POWER SAVE

Enables or disables the monitor entering power saving mode. When [ENABLE] is selected, the monitor goes into power saving mode after the period of time has passed with no input signal detected or signal loss has occurred. You can set the power saving condition in [MODE]. When the monitor is in power saving mode, the LED power indicator will change color. Refer to the Power LED table (see page 25). When [DISABLE] is selected, the monitor doesn't go into power saving mode. The monitor will enter the state selected for [MODE] in the following condition: The monitor is powered off by pressing the main power switch or POWER ON button on the remote control, [POWER] in [SCHEDULE INFORMATION], or by an external control.
Please refer to the monitor's specifications (see "Product Specifications" on page 73) for power consumption information.

TIP:
- When the monitor is connected to a computer, the computer's display adapter may not stop sending digital data even though there is no image on-screen. If this occurs, the monitor will not switch into standby state.
- If [AUTO OFF] or [CUSTOM] is selected in [HUMAN SENSING]*1, the power save function does not work.
  *1: This function is available only when connecting the optional sensor unit.

TIME SETTING ..... Sets the amount of time the monitor should wait for input signal before going into power save mode.

MODE

LOW POWER..... The monitor cannot detect an input signal from the connected device will not turn on automatically. To turn on the monitor, please press the main power switch on the monitor or the POWER ON button on the remote control, or disconnect and reconnect the device's signal cable.

NORMAL ..... The monitor turns on by detecting an input signal from a connected device. Please set to [NORMAL] when using an external control function (see page 59 or page 60).

USB

USB POWER..... [ON] allows power supply to USB port when the monitor is in standby mode.

TIP: Power consumption by devices connected to this port depends on the USB devices.

POWER SAVE MESSAGE

Shows a message as the monitor is entering low power mode.

QUICK START

When [ENABLE] is selected, the monitor will quickly return to the [ON] state when a signal is detected. Enabling this option increases standby power consumption.

THERMAL MANAGEMENT

INTERNAL TEMPERATURE

Shows the internal temperature of the monitor.

SCREEN SAVER*1

Reduces the risk of Image Persistence.

TIP:
- When the screen saver starts, the image aspect is changed to [FULL]. When the screen saver stops, the aspect will return to the current [ASPECT] setting.
- The screen saver cannot be selected for a signal input of 4K.
- When the [MOTION] is active, [ASPECT] and [OVERSCAN] are not available.
- This function will be disabled when activating [TILE MATRIX] or pressing STILL button on the remote control.

MOTION

Slightly moves the image in four directions (up, down, right, left) at the pre-set interval.

INTERVAL ..... Use the ◀ or ▶ button on the remote control unit to set the time on the [INTERVAL] slider.

ZOOM..... Set how much move the image. The higher the number, the higher the effect of reducing image persistence. The sides of the image are temporarily cut off as the image is moved around the screen when being shifted off then back onto the screen.

POWER ON DELAY*1

Delays the monitor from turning on for the amount of time set when the POWER button is pressed.

DELAY TIME

The delay can be set between 0 and 50 seconds.

LINK TO ID

Links the [DELAY TIME] to the monitor's ID. This helps to prevent power surges that may occur if all multiple monitors were to turn on at the same time. The higher the Monitor ID, the longer the delay is before the monitor powers on.

For example, if the Monitor ID is 20 and the [DELAY TIME] is 5 seconds, the amount of time that passes between when the POWER button is pressed and when the power actually turns on is 95 seconds.

TIP: If the [DELAY TIME] is set to 0 seconds, there will be no extended delay for [LINK TO ID]. The delay time must be 1 second or higher to delay power on.

SECURITY SETTINGS

Sets the monitor's security function.

PASSWORD

Input the current password to change the settings in this menu. The default password is 0000.

SECURE MODE

Selects when a security password is required to use the monitor.

START-UP LOCK ..... The password is required when powering on the monitor.

CONTROL LOCK ..... The password is required when pressing the buttons and key on the monitor or the buttons on the Remote control unit.

CHANGE PASSWORD

Changes the password.

The factory preset password is [0000].

CURRENT PASSWORD ..... Enter the current password.

NEW PASSWORD ..... Enter a new password.

CONFIRM PASSWORD ..... Enter the new password again to confirm the password change.

LOCK SETTINGS

Prevents the monitor from being controlled by the Remote control unit, the buttons and key on the monitor, or both. Please refer to "Locking the Button Controls" (page 54 and page 55).

ALERT MAIL*1

When set to [ON] and the monitor is connected to a network, the monitor can send an email message when an error occurs. The email settings must be configured in the monitor's HTTP server settings for an ALERT MAIL to be sent. See page 64.

RESET*1

Resets all PROTECT settings back to factory setting, except for [POWER ON DELAY] and [SECURITY SETTINGS].

*1: This option is shown and enables for setting only when [LANDSCAPE] is set to [OSD ROTATION].

■SYSTEM

MONITOR INFORMATION

Shows the model name, serial number, and firmware revision of the monitor.

MODEL

SERIAL

CARBON SAVINGS

Shows the estimated carbon saving information in kg-CO2. The carbon footprint factor in the carbon saving calculation is based on the OECD (2008 Edition).

CARBON USAGE

Shows the estimated carbon usage information in kg-CO2. This is the arithmetic estimation, not actual measurement value. This estimation is based without any options.

FIRMWARE

Shows the monitor's current firmware revision.

MAC ADDRESS

Shows the monitor's [MAC ADDRESS].

DATE & TIME

TIP: If the monitor's main power has been turned off for about two weeks, the clock function stops working. In this case, please set the [DATE & TIME] setting again.

YEAR

Sets the current year. Press the ◀ or ▶ button on the Remote control unit to cycle to the current year.

MONTH

Sets the current month. Press the ◀ or ▶ button on the Remote control unit to cycle to the current month.

DAY

Sets the current day of the month. Press the ◀ or ▶ button on the Remote control unit to cycle to the current day.

TIME

Sets the current time. Highlight the hour field, then press the ◀ or ▶ button on the Remote control unit to cycle to the current hour, then repeat this for the minutes field.

TIP:
- If the monitor is at a location that is currently in Daylight Savings, set the TIME field to what the current time would be when Daylight Savings is not in effect. Then enable the [DAYLIGHT SAVING] function to have the clock automatically adjust to the current time.
- The monitor's clock is a 24-hour format.

CURRENT DATE TIME

Shows the current date and time. This data does not reflect changes to the Date and Time settings until SET is pressed on the Remote control unit.

DAYLIGHT SAVING

Automatically changes the real-time clock to match Daylight Savings hours.

TIP: Set the [DATE & TIME] before enabling the [DAYLIGHT SAVING] setting.

DAYLIGHT SAVING

Automatically adjusts the current time, when Daylight Saving hours are in effect, based on the start and end dates selected in this menu.

BEGIN MONTH/DAY/TIME

Set the month, day, and time for when Daylight Saving begins.

END MONTH/DAY/TIME

Set the month, day, and time for when Daylight Saving ends.

TIME DIFFERENCE

Set the time difference for the real-time clock adjustment. When Daylight Saving starts, this is the amount of time the real-time clock will be adjusted.

EXTERNAL CONTROL

Sets the monitor's ID number, assigns the monitor to groups.

MONITOR ID*1

Sets the monitor's ID number between 1 and 100. This number is also used by the Remote control unit when in ID mode.

TIP: It is strongly recommended so that the monitor can be individually identified and controlled.

GROUP ID*1

This function assigns monitors to groups, which gives you the ability to send commands to all monitors; however, only monitors with the matching Group ID perform the command. Group IDs allow specific groups of monitors to be targeted using a single command, providing high-speed parallel operation. It is useful for scenarios such as rapid switching of video inputs or tile matrix configurations within a video wall. The [GROUP ID] function is used only via RS-232C commands from your software or control system. Monitors can be assigned to any of the 10 available Group IDs, labeled A-J. Refer to the External_Control.pdf file (see page 75) for the monitor's command codes.

CONTROL TERMINAL

Selects control terminal, [RS-232C] or [LAN].

LANGUAGE

Select the language used by the OSD.

OSD

OSD TIME*1

Turns off the OSD after a period of inactivity. The preset choices are 10-240 seconds.

OSD POSITION*1

Determines the location where the OSD appears on the screen.

INFORMATION OSD*1

Selects whether or not to automatically show information about the monitor when it powers on, changes input, or the current input signal changes.

The information includes the current input, audio source, aspect ratio, resolution, and refresh rate. The monitor's ID and IP address are also shown unless their setting is OFF.

Note that the information OSD is also shown when pressing the DISPLAY button on the Remote control unit. The Remote control unit function cannot be turned off.

COMMUNICATION INFO.

Selects whether or not to show the [IP ADDRESS] when the [INFORMATION OSD] is [ON] or when pressing the DISPLAY button on the Remote control unit.

The information is set in [NETWORK INFORMATION] at [NETWORK].

Menu Items

OSD ROTATION

Changes the OSD orientation between landscape and portrait.

LANDSCAPE.....Shows the OSD in landscape orientation.

PORTRAIT .....Shows the OSD in portrait orientation.

TIP:
- OSD settings in [LANDSCAPE] mode are kept in [PORTRAIT] mode.
- The Media Player menu is always shown in the landscape orientation. Selecting [PORTRAIT] for the [OSD ROTATION] does not affect the Media Player menu orientation.

KEY GUIDE*1

Shows the monitor's button controls Key Guide when the OSD Menu is open.

The Key Guide is aligned to the monitor's buttons and key and does not move if the OSD POSITION changes. It is a visual guide to indicate the position of the buttons so that features can be easily adjusted when not using a Remote control unit.

CLONE SETTING*1

Allows for exporting and importing some of the OSD menu settings between monitors. The settings are saved on a USB flash drive (formatted FAT16 or FAT32) connected to the monitor's USB port (See page 19).

ALL INPUT

Selects to import the settings for all input terminals. If this option is not selected, the settings are only imported for the current input terminal.

Individually select each OSD menu function's settings to import.

Option items are INPUT, PICTURE, AUDIO, SCHEDULE, NETWORK, PROTECT, SYSTEM, HTTP.

TIP:
- The selection of which settings to copy is reset to default if the monitor's main power is turned off.
- The [HTTP] option copies the monitor's web interface settings. Only settings that are not monitor specific are exported and imported during this process.

COPY START - USB READ

Imports the monitor settings from a connected USB flash drive.

COPY START - USB WRITE

Exports the monitor settings to a connected USB flash drive.

POWER INDICATOR

Turns on or off the power LED that indicates the monitor is powered on and in active mode. The monitor's power LED will not glow when this setting is [OFF].

MUTE SETTING*1

Allows you to mute the monitor's audio and video output.

AUDIO .....Mutes the audio output when the Remote control unit's MUTE button is pressed.

VIDEO .....Mutes the video output when the Remote control unit's MUTE button is pressed.

AUDIO & VIDEO.....Mutes the audio and video output when the Remote control unit's MUTE button is pressed.

TIP: The MUTE setting is released in the following cases:
- Change the [INPUT].
- Turn off/on the monitor by the main power switch.
- Turn off/on the monitor with the power button on the Remote control unit or on the monitor.
- Return from power save.
- Change the [MUTE SETTING] setting.
- Change the [AUDIO MODE] setting.
- Volume is changed with the Remote control unit or the main unit key.
- Video signal (resolution/scanning frequency) is changed.

UPDATE FIRMWARE*1
Updates the firmware after connecting a USB flash drive (formatted FAT16, FAT32) containing a FIRMWARE image file (PAC file) to the monitor (See page 19).
RESET
Resets all SYSTEM settings back to factory setting, except for [LANGUAGE], [OSD ROTATION], [KEY GUIDE] and [DATE & TIME].
FACTORY RESET*1
All items are returned to the factory shipment state except for [PASSWORD] in the [PROTECT] → [SECURITY SETTINGS].

*1: This option is shown and enables for setting only when [LANDSCAPE] is set to [OSD ROTATION].

Using the Media Player menu

The Media Player plays image, video, and music files located on a USB storage device connected the USB port on the monitor (see page 19).

To open the Media Player menu, press the MENU button on the remote control and select [Media Player] with [INPUT SELECT] in the OSD menu.

TIP:
- The USB flash drive containing the files must be connected to the USB port on the monitor.
- The Media Player does not auto-rotate content when changing the monitor's orientation from landscape to portrait and vice versa. Content must be created in the same orientation that matches the installed orientation of the monitor to display correctly.
- The Media Player menu is always shown in the landscape orientation.

■Media Player menu

Shows image, music, or video files stored in the USB flash drive.

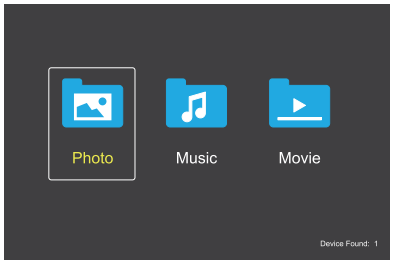

Select the type of file you want to play between movie, music, and photo.

Selecting files to play

- Playing a file.
  Navigate to a file using the ▲, ▼, ◀, ▶ buttons on the remote control, and then press the 2 ▶ button.
- Playing multiple files.
  1. Navigate to a file using the ▲, ▼, ◀, ▶ buttons on the remote control.
  2. Press the SET button to add a checkmark next to each file.

  TIP:
  - The files play in the sorted order.
  - File names must contain only alphanumeric characters.
  - While opening a playback screen, the OSD menu will not open if you press the MENU button on the remote control. To open the OSD menu:
    1. Press the EXIT button in the playback screen.
    2. Press the MENU button in the file selecting screen.

Operation Buttons

- Press the SET button while playing a file to display the operation menu on the screen.
- Press ◀, ▶ buttons to highlight an item in the operation menu and then press the SET button.
- Press the EXIT or the ▼ button on the remote control to close the operation menu.

Slideshow operation

- Navigate to files using the ▲, ▼, ◀, ▶ buttons and press the 2 ▶ button to start a slideshow.
  Press the 6 II button to pause the slideshow.
- To pause the slideshow using the on-screen operation menu, select Pause.
  Select Play to resume the slideshow.
- Select Prev or press the ⏮1 button to return to the previous image.
- Select Next or press the 3 ⏭ button to go to the next image.
- Select Stop or press the 5 ■ button to stop the slideshow.

Repeat Play

The following modes are available to loop files for repeat play.

Repeat None - Repeat off

- No selected files.
  - All files in the folder are played once, in the sorted order.
- One or more selected files.
  - Any files you checked are played once, in the sorted order.

Repeat 1 - Repeat one file

- No selected files.
  - A file is playing: the current file plays on a loop.
  - No file is playing: the highlighted file in the folder plays on a loop.
- One or more selected files.
  - The highlight is on a checked file: the highlighted file plays on a loop.
  - The highlight is not on a checked file: the first checked file in the sorted order plays on a loop.

Repeat ALL - Repeat all files

- No selected files.
  - All files in the folder are played on a loop, in the sorted order.
- One or more selected files.
  - The selected files are played on a loop, in the sorted order.

Random Play

Random On Random Off - Random Play

- Shuffles files to repeat play in a random order instead of the file sorted order.

Other Functions

- Select Playlist to view the playlist of files.
  You can also select the files to play from the list.
- While a file is being played, select Info to show information on the file being played.
- Select Rotate L or Rotate R to rotate an image being displayed.

Zoom Function

- Select Zoom In or Zoom Out to switch the image size.
  8, **4**, **2**, **1**, **1/2**, **1/4**.
- Select Move View to scroll the enlarged image.

Slide Show

Slide Show

- Set the amount of time to show the image.
  Short: 5 sec.
  Medium: 10 sec.
  Long: 15 sec.

Video and music operations

- Select files using the ▲, ▼, ◀, ▶ buttons and press the 2 ▶ button to start the playback.
  Press the 6 II button to pause the playback.
- To pause the playback using the on-screen operation menu, select Pause.
  Select Play to resume the playback.
- Select FF to start fast forward.
  FF2X, **FF4X**, **FF8X**, **FF16X**, **FF32X**
  (The sound is not output).
- Select FB to start fast backward.
  FF2X, **FF4X**, **FF8X**, **FF16X**, **FF32X**
  (The sound is not output).
- Select Prev or press the ⏮1 button to return to the previous file.
- Select Next or press the 3 ⏭ button to go to the next file.
- Select Stop or press the 5 ■ button to stop the playback.

Repeat Play

The following modes are available to loop files for repeat play.

Repeat/None - Repeat off

- No selected files.
  - All files in the folder are played once, in the sorted order.
- One or more selected files.
  - Any files you checked are played once, in the sorted order.

Repeat 1 - Repeat one file

- No selected files.
  - A file is playing: the current file plays on a loop.
  - No file is playing: the highlighted file in the folder plays on a loop.
- One or more selected files.
  - The highlight is on a checked file: the highlighted file plays on a loop.
  - The highlight is not on a checked file: the first checked file in the sorted order plays on a loop.

Repeat/ALL - Repeat all files

- No selected files.
  - All files in the folder are played on a loop, in the sorted order.
- One or more selected files.
  - The selected files are played on a loop, in the sorted order.

NONE Set A Set B (Only for video)

- Plays a section of a video in a loop.
  Set the start point with Set A and the stop point with Set B.
  Select NONE to stop the loop playing.

Random Play

Random On Random Off - Random Play

- Shuffles files to repeat play in a random order instead of the file sorted order.

Other Functions

- Select LIST to view the playlist of files.
  You can also select the files to play from the list.
- While a file is being played, select INFO to show information on the file being played.

TIP:

- When turning off the power or exiting the Media Player menu, the playlist selection will reset. When you next use the Media Player, you will need to select the playlist's file again.
- To play files automatically when turning on the power, select the content to play in [Media Player] under [INPUT SIGNAL SETTINGS] (see page 33).
- Only use USB mass storage class device types. There is no support for any other kind of USB device.
- We cannot guarantee to support all commercially available USB mass storage devices.
- Do not use a USB hub.
- Do not use a multi-partition USB flash drive.
- Supports power USB Type-A connector (DC 5 V, max. 2 A). For USB devices over 2 A, use an external AC power adaptor.
- NTFS (New Technology File System) is the recommended file system for the USB flash drive.
- When connecting the monitor to a computer, with a USB flash drive formatted as FAT16 or FAT32, a message prompting you to the scan the USB flash drive may appear. If that occurs, scan the USB flash drive.

USB flash drive data and file format requirements

Supported file system	FAT16/32, NTFS		
Max. folder level	9		
Max. number of photos	997		
PHOTO mode			
File Extension	**Data format**	**Min. Resolution (HxV) of Image**	**Max. Resolution (HxV) of Image**
JPEG, JPG, JPE	Baseline Sequential DCT	75x75 pixels	15,360x8,640 pixels
MUSIC mode			
File Extension	**Data format**	**Max. Bit rate**	**Max. Channel No.**
MP3	MPEG1/2 Layer3 (MP3)	320 Kbps	2ch
MOVIE mode			
Container format	**Supported Video codec**		**Supported Audio codec**
MPG, MPEG	MPEG1, MPEG2, MPEG4		LPCM, MP3, AAC
TS	MPEG2, H.264, HEVC/H.265		LPCM, MP3, AAC
MP4	MPEG2, MPEG4, H.263, H.264, HEVC/H.265		LPCM, MP3, AAC
WMV	H.264, Windows Media Video 9		WMA 9, WMA 10 Pro
Video codec	**Max. Bit rate of Video*2**	**Max. Resolution (HxV) of Video**	
MPEG1	40 Mbps	1920x1080@30 Hz	
MPEG2	40 Mbps	1920x1080@30 Hz	
MPEG4	40 Mbps	1920x1080@30 Hz	
H.263	40 Mbps	1920x1080@30 Hz	
H.264	135 Mbps	3840x2160@60 Hz	
HEVC/H.265	100 Mbps	3840x2160@60 Hz	
Windows Media Video 9 (WMV3)	40 Mbps	1920x1080@30 Hz	
Audio codec	**Max. Bit rate of Audio*2**	**Max. Channel No.**	
LPCM	1.5 Mbps	5.1ch*1	
MPEG1/2 Layer3 (MP3)	320 Kbps	2ch	
AAC	AAC-LC: 576 Kbps HE-AAC v1: 288 Kbps HE-AAC v2: 144 Kbps	5.1ch*1	
WMA 9 Standard	320 Kbps	2ch	
WMA 10 Pro M0	192 Kbps	2ch	
WMA 10 Pro M1	384 Kbps	5.1ch*1	
WMA 10 Pro M2	768 Kbps	5.1ch*1	

*1: It is played with down-converted to 2ch.
*2: It may not play smoothly at combination of Max bit rate of Video and Audio.

NOTE: • Sometimes, it may not be possible to play a video file even when the conditions above are met.
The file may not be played properly depending on the bit rate.
Video files made with a codec not supported by the monitor cannot be played.

Advanced Operation

The schedule function allows the monitor to automatically change between power on and standby state at different times.

To program the schedule:

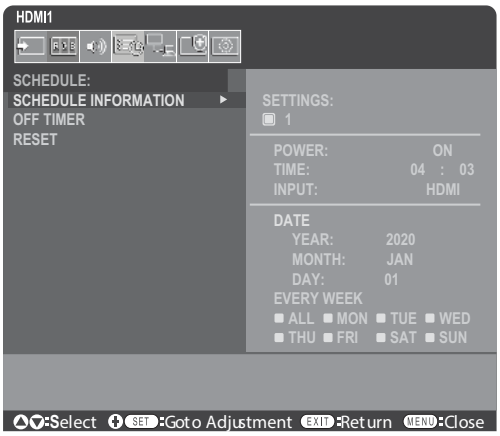

1. Enter the [SCHEDULE] menu.

① Press the MENU button on the Remote control unit.

② Highlight [SCHEDULE INFORMATION] in [SCHEDULE] using the ▲ and ▼ buttons.

③ Press the SET button or the ▶ button to enter the Settings menu.

④ Highlight the desired schedule number and press the SET button.

⑤ The box next to the number will have a check.
The schedule can now be programmed.

2. Set a Power On/Off Schedule.

① Use the ▼ button to highlight the [POWER]. Use the ◀ and ▶ buttons to set [ON].

To set a power off schedule, set [OFF].

② Use the ▼ button to highlight the [TIME]. Use the ◀ and ▶ buttons to set the time.

③ Use the ▲ and ▼ buttons to highlight [INPUT]. Use the ◀ and ▶ buttons to choose the input source.

TIP: VGA(RGB) terminal cannot be selected for [INPUT].

④ Use the ▼ button to select [DATE] or [EVERY WEEK]. Press the SET button on a menu which is suitable for the schedule.

- If the schedule is to be run on a specific day, choose [DATE] and press the SET button.
- If a weekly schedule is desired, choose the [EVERY WEEK] using the ▲ and ▼ buttons and pressing the SET button to select. Then select the specific day and press the SET button.

⑤ After a schedule is programmed, the remaining schedules can then be set. Press the MENU button to leave the OSD or press EXIT button to go back to the previous menu.

TIP:
- The [DATE & TIME] needs to be set before adding schedules.
- Schedules you configure are saved when closing the [SCHEDULE SETTINGS] window.
- If multiple schedules are set to start at the same time, the conflicting schedule with the highest number is given priority.
- Schedules will not run when the [OFF TIMER] is set to [ON].
- Schedules do not run while the [SCHEDULE SETTINGS] menu is open.
- When a period of about two weeks has passed after disconnecting the power cord of the monitor, the time will be reset and the clock function will stop. When reset, the date becomes [JAN.01.2020] and the time becomes [00:00]. If the clock function has stopped, configure the [DATE & TIME] again.

Setting Security and Locking the Monitor Controls

Under normal operation, the monitor can be controlled by any person using the Remote control unit or buttons or key on the monitor. You can prevent unauthorized use and changes to the monitor settings by enabling the options for Security and Lock Settings.

The security and locking functions covered in this section are:

- Setting the password
- Enabling password security
- Locking the Remote control unit buttons (See page 17)
- Locking the monitor buttons and key (See page 18)

Settings Location

The instructions in this section guide you through configuring security and locking functions in the monitor's OSD menu. These settings can also be configured using the monitor's web controls. See page 62.

The menu options for Security and Lock Settings are in the [PROTECT] menu in both the OSD menu and web controls.

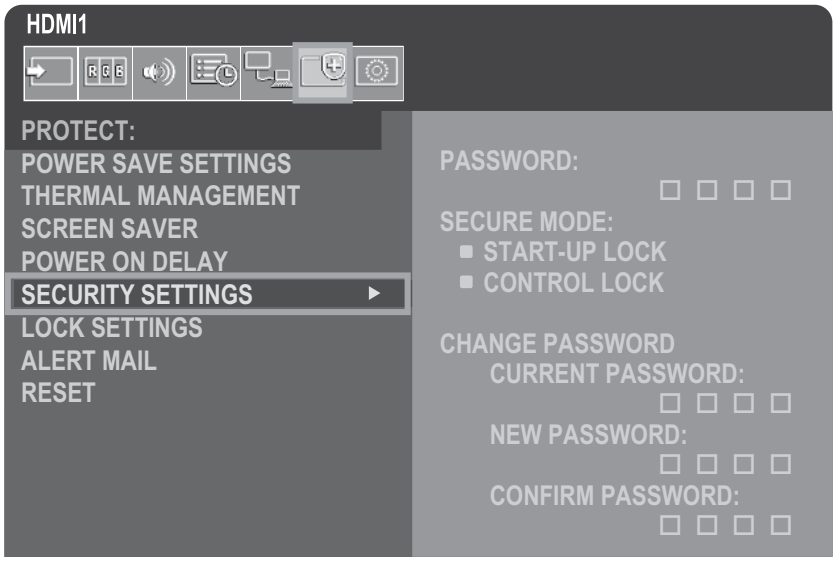

■Password Security

When password security is enabled a four-digit passcode is required when turning on the main power and/or accessing the OSD (see page 43). The monitor will function normally after the password is entered. If no buttons have been pressed for 30 seconds, the monitor will return to SECURE MODE automatically and the password will be required again.

TIP: If you change the password make a note of the password in a secure location. If you forget your password, you will need to contact technical support to get a recovery password to access the monitor's OSD menu.

Set a password for the monitor

This step is only required if you want to change the password.

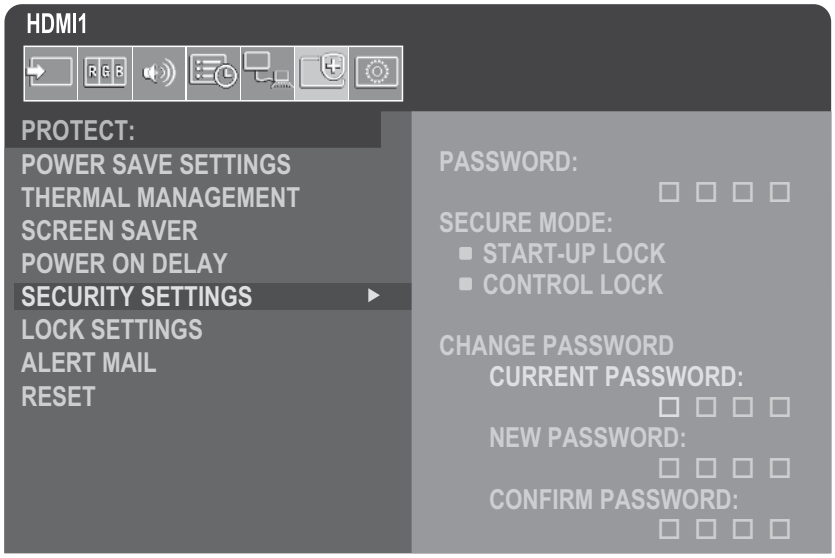

1. **Using the Remote control unit, navigate to [PROTECT], then to [SECURITY SETTINGS].**
2. **Under [CHANGE PASSWORD], enter the password in the [CURRENT PASSWORD] field. (The default password is: 0 0 0 0).**
3. **Input a [NEW PASSWORD] and then input it again in the [CONFIRM PASSWORD] field.**
4. **The new password is immediately saved.**

Enable password security

1. **Using the Remote control unit, navigate to [PROTECT] then to [SECURITY SETTINGS].**
2. **Enter the password in the [PASSWORD] field to access the [SECURE MODE] settings.**
3. **Select the type of [SECURE MODE] you want to use:**

   [**START-UP LOCK**] – The password is required when turning on the monitor from the main power switch.

   When this option is selected, the password is only required on power cycle using the main power switch or after power failure. This option does not prompt for a password when using the Remote control unit POWER and STANDBY buttons or the power button on the monitor.

   [**CONTROL LOCK**] – The password is required to use any of the Remote control unit buttons or buttons on the monitor.
4. **Press MENU to close the OSD menu.**

   The settings are saved after closing the OSD menu.

■Locking the Button Controls

The lock settings prevent the monitor from responding to button presses on the Remote control unit or the rear side of the monitor. When locking the button controls, some buttons can be configured to remain unlocked for users to adjust the settings. Locking and unlocking the button controls do not require a password.

Locking the IR Remote Buttons

Locking

The [IR] option in the [LOCK SETTINGS] prevents the monitor from being controlled using the Remote control unit. Enabling [IR] does not lock the buttons and key on the monitor.

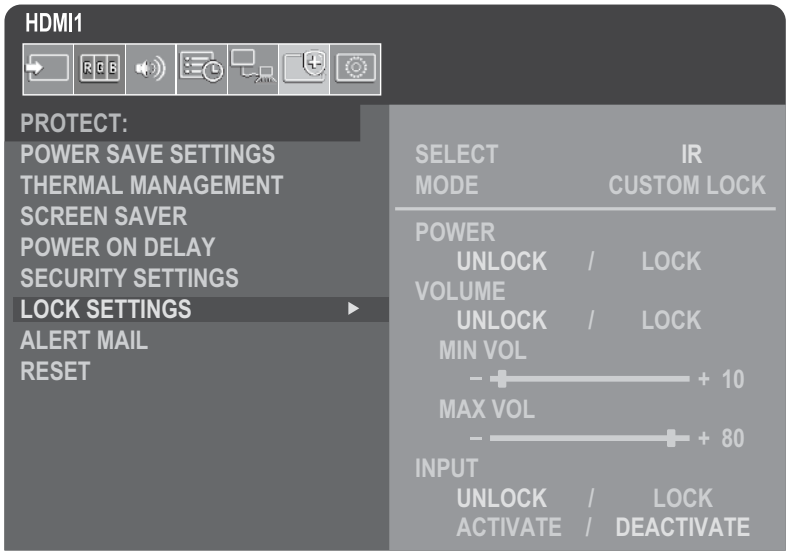

1. **Using the Remote control unit, navigate to [PROTECT], then to [LOCK SETTINGS].**
2. **Under the [SELECT] option, press the ▲, ▼ buttons to change the setting to [IR].**
3. **Under [MODE] choose the lock mode you want to enable.**

   [**UNLOCK**] – All buttons are unlocked.

   [**ALL LOCK**] – All buttons are locked.

   [**CUSTOM LOCK**] – All remote buttons are locked except for the following buttons that can be individually set as locked or unlocked.

   [**POWER**] – Select [UNLOCK] to be able to use the power button when the IR Remote is locked. Select [LOCK] to lock the button.

   [**VOLUME**] – Select [UNLOCK] to be able to control the volume with the VOL+/VOL– buttons when the IR Remote is locked. Select [LOCK] to prevent volume adjustment.

   [**MIN VOL**] and [**MAX VOL**] – The volume buttons are unlocked, and the volume level can only be adjusted within the [MIN] and [MAX] range set.

   The [VOLUME] must be set to [UNLOCK] for this setting to operate.

   TIP: Volume [MIN VOL]/[MAX VOL] lock only works with the Internal speaker and Audio Line Out (3.5 mm connector). It does not work when [AUDIO RECEIVER] is set to [ENABLE].

   [**INPUT**] – Select [UNLOCK] to unlock all input buttons. Select [LOCK] to lock all input buttons.
4. **Select [ACTIVATE] to activate all settings.**

Unlocking

- Remote control unit – to return to normal operation, press-and-hold the DISPLAY button for at least 5 seconds.

Locking the rear side Buttons and Key

Locking

The [KEY] in the [LOCK SETTINGS] prevents the monitor from being controlled using the buttons and key on the monitor. Enabling the [KEY] does not lock the buttons on the Remote control unit.

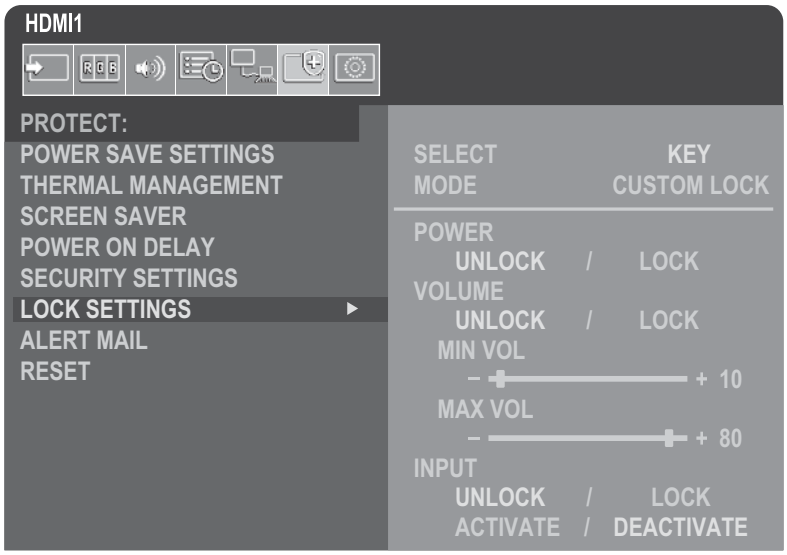

1. **Using the Remote control unit, navigate to [PROTECT], then to [LOCK SETTINGS].**
2. **Under the [SELECT] option, press the ▲, ▼ buttons to change the setting to [KEY].**
3. **Under [MODE] choose the lock mode you want to enable.**

   [**UNLOCK**] – All keys are unlocked.

   [**ALL LOCK**] – All key buttons are locked.

   [**CUSTOM LOCK**] – All key buttons are locked except for the following buttons that can be individually set to be locked or unlocked.

   [**POWER**] – Select [UNLOCK] to be able to use the power button when the keys are locked.

   [**VOLUME**] – Select [UNLOCK] to be able to control the volume with the ◁/▷ keys when the keys are locked. Select [LOCK] to prevent volume adjustment.

   [**MIN VOL**] and [**MAX VOL**] – The ◁/▷ keys are unlocked and the volume can only be adjusted within the [MIN] and [MAX] range set.

   The [VOLUME] must be set to [UNLOCK] for this setting to operate.

   TIP: Volume [MIN VOL]/[MAX VOL] lock only works with the Internal speaker and Audio Line Out (3.5 mm connector). It does not work when [AUDIO RECEIVER] is set to [ENABLE].

   [**INPUT**] – Select [UNLOCK] to be able to change the inputs using the INPUT button.
4. **Select [ACTIVATE] to activate all settings.**

Unlocking

Key/Buttons – To return to normal operation unlock all the buttons/keys on the monitor by pressing the SET button and MENU/EXIT button on the monitor at the same time for 3 seconds or longer.

OSD Menu – To return to normal operation, use the Remote control unit, to navigate to [PROTECT] then to [LOCK SETTINGS]. Under the [SELECT] option, change the setting to [KEY]. Under [MODE] choose [UNLOCK] and then select [ACTIVATE].

Locking the IR Remote Buttons and the rear side Buttons

Select [PROTECT] → [LOCK SETTINGS] → [SELECT] → [KEY & IR] from the OSD menu.

For the subsequent setting procedure, buttons/keys for which the lock is enabled, and unlocking method, refer to "Locking the IR Remote Buttons" and "Locking the rear side Buttons and Key".

Setting the Remote Control ID Function

The Remote control unit can be used to control up to 100 individual MultiSync monitors using what is called the REMOTE CONTROL ID mode. The REMOTE CONTROL ID mode works in conjunction with the Monitor ID, allowing control of up to 100 individual MultiSync monitors. For example, if there are many monitors being used in the same area, a Remote control unit in normal mode would send signals to every monitor at the same time (see **Figure 1**). Using the remote in REMOTE CONTROL ID mode will only operate one specific monitor within the group (see **Figure 2**).

To Set Remote Control ID (Entering REMOTE CONTROL ID mode)

While holding down the REMOTE ID SET button on the Remote control unit, use the KEYPAD to input the Monitor ID (1-100) of the monitor to be controlled via remote. The Remote control unit can then be used to operate the monitor having that specific Monitor ID number.

When 0 is selected or when the Remote control unit is in normal mode, all monitors will be operated.

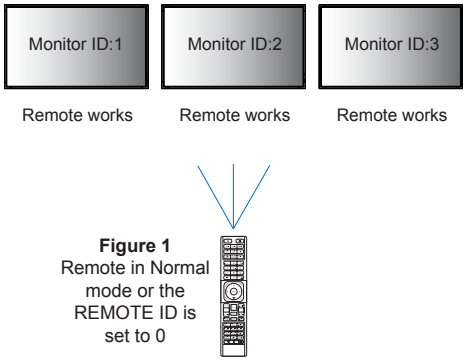

Figure 1
Remote in Normal mode or the REMOTE ID is set to 0

To Reset the REMOTE CONTROL ID mode

Normal Mode - To return to Normal Mode press the REMOTE ID CLEAR button and hold down for 5 seconds.

TIP:
- In order for this feature to work properly, the monitor must be assigned a Monitor ID number. The Monitor ID number can be assigned under the [SYSTEM] menu in the OSD. See page 45.
- Point the Remote control unit toward the remote sensor of the desired monitor and press the REMOTE ID SET button. The MONITOR ID number is shown on the screen when your Remote control unit is in ID mode.

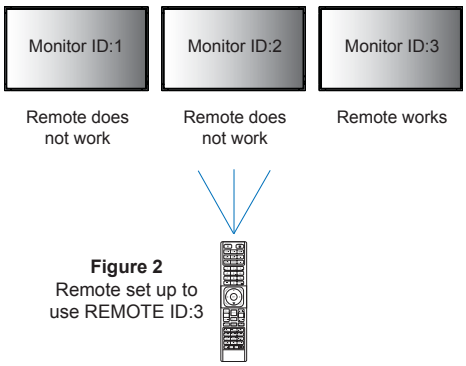

Figure 2
Remote set up to use REMOTE ID:3

You need a Remote control unit for this function.

Use the Remote control unit to Control all Monitors in Range

1. **On the Remote control unit, press and hold down the REMOTE ID SET button while using the keypad to input the REMOTE CONTROL ID number "0".**
2. **All monitors within range of the Remote control unit will now respond to keypad press.**

TIP: When the REMOTE ID is set to "0", pressing REMOTE ID SET will make all monitors, within range of the remote signal, show their Monitor ID on screen. This way you can easily see what the Monitor ID is if you want to control a single monitor, as described below.

Use the Remote control unit to operate a monitor that has a specific MONITOR ID number assigned to it

1. **Set the [MONITOR ID] number for the monitor (see page 45). The [MONITOR ID] number can range from 1-100.**

   This [MONITOR ID] number allows the Remote control unit to operate this specific monitor without affecting other monitors.

2. **On the Remote control unit, press and hold down the REMOTE ID SET button while using the keypad to input the REMOTE CONTROL ID number (1-100).**

   The REMOTE ID NUMBER should match the MONITOR ID number of the monitor to be controlled.

3. **Point the Remote control unit toward the remote sensor of the desired monitor and press the REMOTE ID SET button.**

   The MONITOR ID number is shown in red on the monitor.

   If the REMOTE CONTROL ID is “0”, then all monitors in range will show their particular MONITOR ID number in red.

   If the MONITOR ID number is shown in white on the monitor, the MONITOR ID number and the REMOTE CONTROL ID are not the same.

Connecting Multiple Monitors

■TILE MATRIX

[TILE MATRIX] in [PICTURE-ADVANCED] allows one image to be expanded and shown over multiple screens (up to 100) through a distribution amplifier. Manually input the number of horizontal and vertical monitor in the video wall, position of the monitor in the wall, and turn on or off Tile Compensation.

TIP: We strongly recommend using the same monitor model for all monitors.

- [H Monitors] ... Number of monitors arranged horizontally.
- [V Monitors].... Number of monitors arranged vertically.
- [Position] ..... Sets the section of the tiled image to view on the current monitor.
- [Tile Comp]..... Scales the image to compensate for the width of the screen bezel in order to create a seamless image.

Example of Tile Matrix 2x2

For the monitor on top:

1. **Set H MONITORS [2] and V MONITORS [2].**

   One image will be divided by 4 then put number from 1 to 4.

OSD

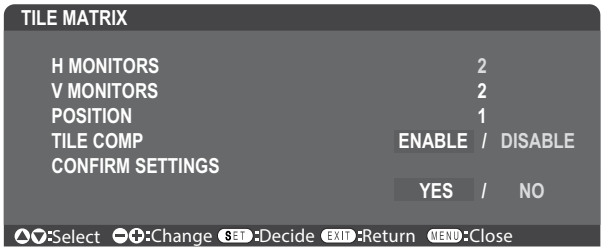

Monitor screen

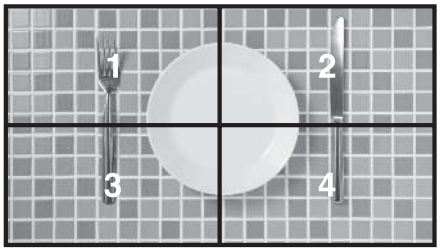

2. **Select 1 to 4 at [POSITION].**

e.g. Selecting 1

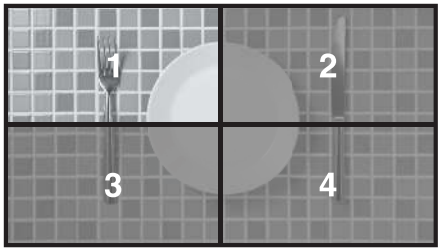

■EXTERNAL CONTROL

[EXTERNAL CONTROL] in [SYSTEM] sets the monitor ID and group ID for the current monitor.

■CLONE SETTING

[CLONE SETTING] in [SYSTEM] copies some of the OSD menu categories to other monitors.

Controlling the Monitor with a computer (RS-232C)

This monitor can be controlled by connecting a personal computer with an RS-232C (reverse type) terminal.

The reverse type cable (null modem cable) (not included) should be used for RS-232C control.

For example, some of the functions that can be controlled by a personal computer are:

- Power ON or standby.
- Switching between input signals.
- Sound Mute ON or OFF.

Monitor and computer connection

- Please turn off the monitor's main power before connecting a computer to the monitor.
- Please turn on the connected computer first then turn on the monitor's main power.

  If you turn on the computer and monitor in reverse order, the com port may not work.

  To control the monitor via commands sent from a computer connected with an RS-232C cable, please use the control command. Instructions for the control command can be found in the "External_Control.pdf". See page 75.

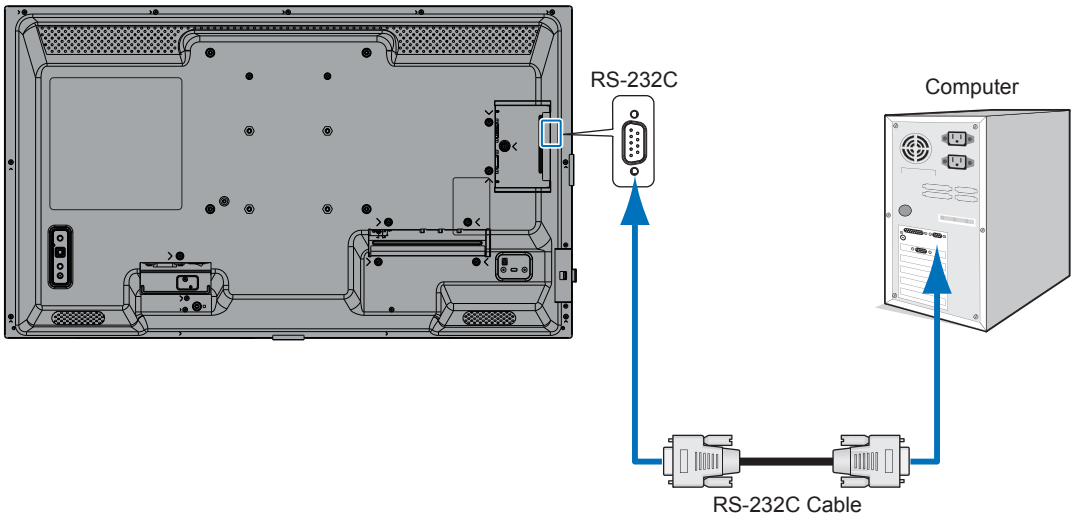

TIP:
- If your computer is equipped only with a 25-pin serial port connector, a 25-pin serial port adapter is required. Contact your supplier for details.
- For the pin assignment, please see "RS-232C input/output".

PIN ASSIGNMENT

RS-232C input/output

Pin No	Name
1	NC
2	RXD
3	TXD
4	NC
5	GND
6	NC
7	NC
8	NC
9	NC

D-SUB 9P (Monitor side)

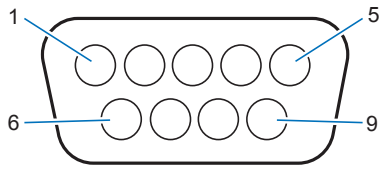

This monitor uses RXD, TXD and GND lines for RS-232C control.

Controlling the Monitor with a computer (LAN)

Connecting to a Network

Using a LAN cable (RJ-45 category 5 or higher) allows you to specify the monitor Settings by using an HTTP server function.

TIP:
- When you use this function, [CONTROL TERMINAL] in [EXTERNAL CONTROL] should be [LAN] (see page 45).
- To use a LAN connection, you are required to assign an IP address (see page 41). The monitor will obtain an IP address automatically when connected to a DHCP network.

Example of LAN connection:

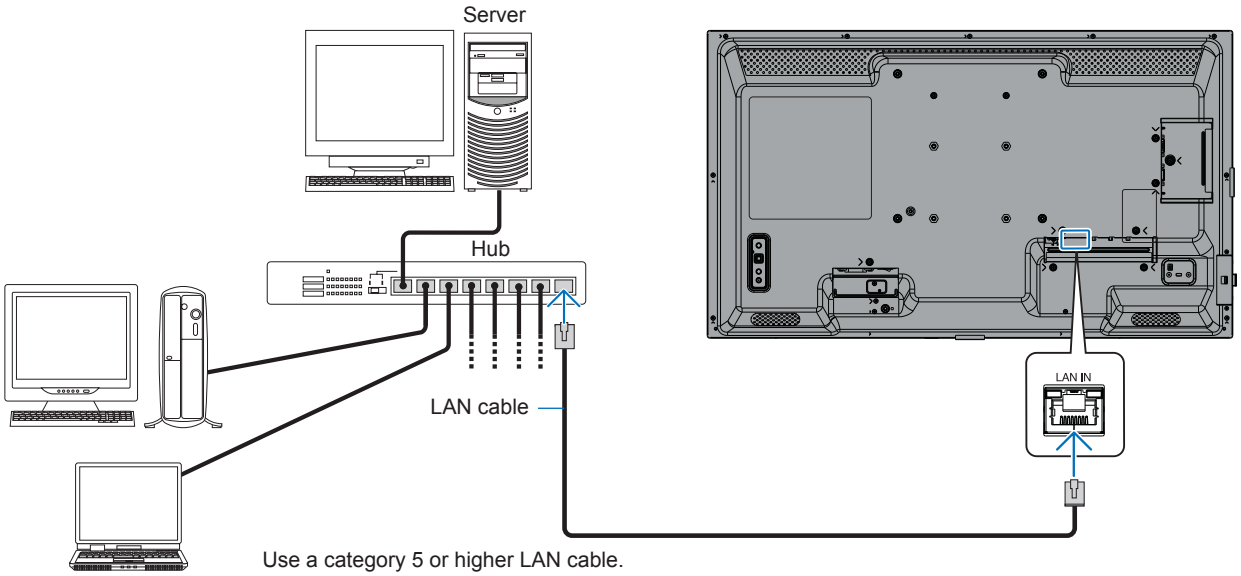

Securing personal information: Personally identifiable information, such as IP addresses, may be saved on the monitor. Before transferring or disposing of the monitor, clear this data by performing the FACTORY RESET function.

■HTTP Browser

Overview

Connecting the monitor to a network allows for Remote control unit of the monitor from a computer connected to the same network.

This device uses “JavaScript” and “Cookies” and the browser should be set to accept these functions. Refer to the help files for the web browser to change the settings to use JavaScript and Cookies.

To access the HTTP server, launch a web browser on a computer connected to the same network as the monitor and enter the following URL in the web address field: https://<the Monitor’s IP address>/index.html

Network Setting

TIP:
- The default IP address is assigned automatically to the monitor.
- NaViSet Administrator software for managing monitors over the network is recommended.
- If the MONITOR NETWORK SETTINGS screen does not appear in the web browser, press the Ctrl+F5 keys to refresh your web browser (or clear the cache).
- If the monitor appears to be slow in response to commands or clicks on buttons in the browser, or the general speed of operation is unacceptable, this may be due to network traffic or the settings on your network. Should this happen, consult your network administrator.
- The monitor may not respond if the buttons shown on the browser are repeatedly pressed in rapid intervals. Should this happen, wait a moment and repeat. If you still can’t get a response, turn the monitor off and then back on.

Preparation Before Use

Operation with a browser that uses a proxy server may not be possible depending on the type of proxy server and the setting method. Although the type of proxy server will be a factor, it is possible that items that have been set will not be shown, depending on the effectiveness of the cache, and the contents set from the browser may not be reflected in operation. It is recommended that a proxy server is not used unless the network environment requires it.

Handling of the Address for Operation via a Browser

A Hostname can be used in the following cases (corresponding to the IP address of the monitor):

The Hostname must be registered in the domain name system (DNS) by the network administrator. You can then access the network settings of the monitor via this registered Hostname by using a compatible browser.

If the Hostname has been configured in the “HOSTS” file of the computer being used, you can then access the network settings of the monitor via this Hostname by using a compatible browser.

Example 1: When the Hostname of the monitor has been set to “pd.xxx.co.jp”, access is gained to the network setting by specifying https://pd.xxx.co.jp/index.html for the address or the entry column of the URL.

Example 2: When the IP address of the monitor is “192.168.73.1”, access is gained by specifying https://192.168.73.1/index.html for the address or the entry column of the URL.

Setup for first-time use of the HTTP server

ENTER NEW HTTP PASSWORD window opens when accessing the HTTP server for the first time.
Set a password for the HTTP server. The password can be max. 32 characters.

Controlling the Monitor with a computer (LAN)

Operation

Access the following address to show HOME,

https://<the Monitor's IP address>/index.html

Click each link on the left-hand column below HOME.

REMOTE CONTROL

Enable an operation to control the monitor equivalent to the keys on the Remote control unit.

■OSD Menu Settings in the Monitor Web controls

Select one of the links on the left side of the monitor web controls to configure the settings available in the monitor's OSD. Please see page 31 for the full list of OSD menu controls.

[INPUT], [PICTURE], [AUDIO], [SCHEDULE], [NETWORK], [PROTECT], [SYSTEM]

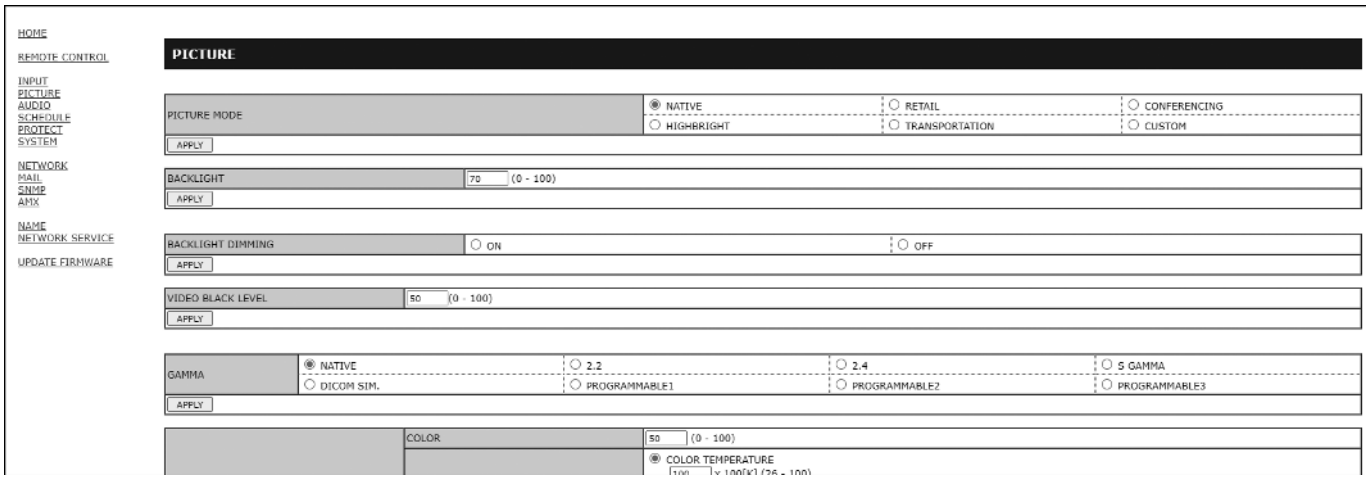

TIP: The buttons in the monitor web controls function as follows:

APPLY: Saves the settings.

CANCEL: Returns to the previous settings.
TIP: CANCEL is disabled after clicking APPLY.

RELOAD: Reloads the settings.

RESET: Resets to the initial settings.

■NETWORK SETTINGS

This screen allows you to set Network Settings.

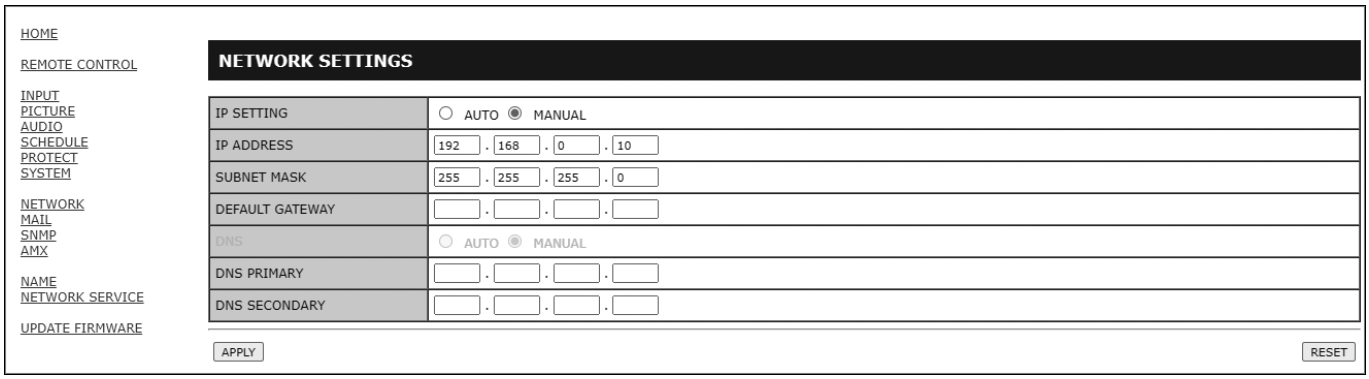

IP SETTING.....Select an option for setting the IP ADDRESS.
AUTO: Automatically assign an IP address.
MANUAL: Manually set an IP address for the monitor connected to the network.
TIP: Consult your network administrator if you have any trouble.

IP ADDRESS.....Set your IP address for the monitor connected to the network when [MANUAL] is selected for [IP SETTING].

SUBNET MASK.....Set your subnet mask data for the monitor connected to the network when [MANUAL] is selected for [IP SETTING].

DEFAULT GATEWAY .....Set your default gateway for the monitor connected to the network when [MANUAL] is selected for [IP SETTING].
TIP: Set as [0.0.0.0] to delete the setting.

DNS.....Set for IP ADDRESS setting of DNS server.
AUTO: The DNS server connected to the monitor will automatically assign its IP address.
MANUAL: Manually enter the IP address of the DNS server that is connected to the monitor.

DNS PRIMARY.....Enter the primary DNS server settings of the network connected to the monitor.
TIP: Enter [0.0.0.0] to delete the setting.

DNS SECONDARY .....Enter the secondary DNS server settings of the network connected to the monitor.
TIP: Enter [0.0.0.0] to delete the setting.

■MAIL SETTINGS

This screen allows you to set MAIL settings.

When the Mail settings are configured and enabled, the monitor sends email notifications when an error occurs or if the input signal is lost. The monitor must be connected to a LAN for this feature to work.

Alert Mail..... When an error occurs, the monitor will send an error message to the email address(es) listed in the Recipient's Address fields. Please see the "Alert error list" table below.
Note that it is not an error when no input signal is detected. The monitor will only send a no signal input notification email when Status Message is enabled.
Selecting [ENABLE] turns on the Alert Mail feature.
Selecting [DISABLE] turns off the Alert Mail feature.

Status Message..... This is a setting for whether to include the 'no signal' condition as an alerting condition or not.
Selecting [ENABLE], Alert Mail send mails when the monitor has no signal or is in alerting conditions.
Selecting [DISABLE], Alert Mail send mails when the monitor is in alerting conditions.
It doesn't send mail when the monitor has no signal.

Sender's Address ..... Type in the sender's address. Up to 60 alphanumeric and symbols characters can be used.

SMTP Server..... Type in the SMTP server name to be connected with the monitor.
Up to 60 alphanumeric characters can be used.

Recipient's Address 1 to 3... Type in your recipient's address. Up to 60 alphanumeric and symbols characters can be used.

Authentication Method..... This selects the authentication method of the email transmission.

POP3 Server ..... This specifies the address of the POP3 server that is used in the authentication of the email.

User Name ..... This sets the user name for logging into the authentication server when authentication is required for the email transmission. Up to 60 alphanumeric characters can be used.

Password..... This sets the password for logging into the authentication server when authentication is required for the email transmission. Up to 60 alphanumeric characters can be used.

Test Mail ..... Click on this button to send a test email to check if your settings are correct.

TIP:
- If an alert email isn't received when performing a Test Mail, check that the network and server settings, and the recipient's email address are correct.
- If you entered an incorrect address in a test, you may not receive an Alert email.
  Should this happen, check that the Recipient's Address is correct.

Alert error list

Error number ErrorCode	Alert mail Message	Explanation	Measure
70h ~ 7Fh	The monitor's power supply is not functioning normally.	Standby power abnormal	Please contact your supplier.
90h ~ 9Fh	The monitor's backlight unit is not functioning normally.	Backlight abnormal	Please contact your supplier.
A0h ~ AFh	The monitor is overheated.	Temperature abnormal	Please contact your supplier.
B0h ~ BFh	The monitor does not receive an input signal.	No signal	Please check "No picture" in "Troubleshooting".
D0h	The remaining capacity of the error log decreased.	The Proof of Play log memory size is 1 more hour.	Please get a log by using PD external command. See page 68.
D1h	The battery for clocks is empty.	The battery is empty.	Please connect the monitor to the power then recharge the battery. Please set (DATE & TIME) in OSD.
E0h ~ EFh	A system error occurred in the monitor.	System error.	Please contact your supplier.

■SNMP SETTINGS

This screen allows you to set SNMP settings.
SNMP is a network management protocol used to communicate with the monitor.
Set whether to use SNMP function.

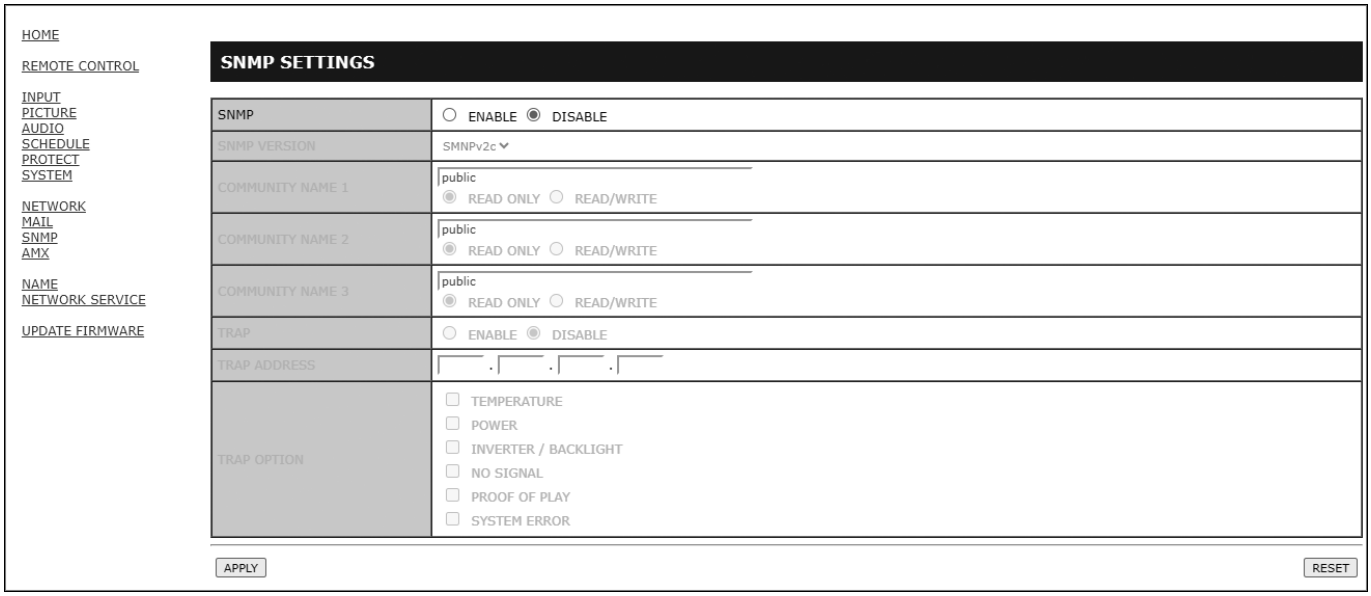

SNMP VERSION

SNMP v1 Authenticated plaintext by community name, does not return a confirmation message of the trap.

SNMP v2c Authenticated plaintext by community name, returns a confirmation message of the trap.

COMMUNITY NAME

Set the name and access type of the group to be managed by SNMP.
The default setting of community name is “public”.

READ ONLY.....READ ONLY only allows you to read information.

READ/WRITE.....READ/WRITE allows you to read and write information.

TRAP

Enables or disables the trapping feature.
If enabled, the item set by TRAP OPTION will be notified.

TRAP ADDRESS

Set the notification destination address and port number for the trap function.

TRAP OPTION

Set the events to be notified by the trap function.

Check Box	Explanation	Error code
Temperature	Temperature abnormal	0xA0, 0xA1, 0xA2
Power	Power abnormal	0x70, 0x71, 0x72, 0x78
Inverter/Backlight	Inverter or backlight abnormal	0x90, 0x91
No Signal	No signal	0xB0
PROOF OF PLAY	Lower the log storage	0xD0
System Error	System error	0xE0

■AMX SETTINGS

This screen allows you to set AMX settings.

AMX BEACON.....Set whether to use detection from AMX Device Discovery when connecting to a network supported by an AMX's NetLinx control system.
TIP:
When using a device that supports AMX Device Discovery, all AMX NetLinx control systems will recognize the device and download the appropriate Device Discovery Module from an AMX server.
Selecting [ENABLE] AMX Device Discovery will detect the device.
Selecting [DISABLE] AMX Device Discovery will not detect the device.

■NAME SETTINGS

This screen allows you to set NAME SETTINGS.

MONITOR NAME .....Allows you to customize the monitor's name, up to a maximum of 16 characters long. This name is shown when searching for devices on the network when using an application such as NaViSet Administrator. Giving the monitor a unique name allows it to be easily identified when viewing a list of monitors on the network. The default name is the monitor's model name.

HOST NAME .....Type in the hostname of the network to the monitor.
Up to 15 alphanumeric characters can be used.

DOMAIN NAME.....Type in the domain name of the network which is connected with the monitor.
Up to 60 alphanumeric characters can be used.

■NETWORK SERVICE SETTINGS

This screen allows you to set NETWORK SERVICE settings.

PJLink CLASS.....Set a class for PJLink*.
TIP: PJLink is a network interface standard that JBMIA established.
https://pjlink.jbmia.or.jp/index.html
This monitor is available for class1 and class2 command.

NOTIFY FUNCTION ENABLE.....Enable or disable a notification of the monitor network condition. This function is only for class2.

NOTIFY ADDRESS .....Set an IP ADDRESS to which the monitor network status will be sent. This function is only for class2.

PJLink PASSWORD.....Set a password for PJLink*. The password must be max. 32 characters long. Do not forget your password. If you forget your password, consult your supplier.

HTTP PASSWORD .....Set a password for the HTTP server. The password must be max. 32 characters long.

HTTP PASSWORD ENABLE .....An HTTP PASSWORD is required when logging into the HTTP server.
Set the monitor name as the USER NAME when entering the password.

*What is PJLink?

PJLink is a standardization of protocol used for controlling devices of different manufacturers. This standard protocol was established by Japan Business Machine and Information System Industries Association (JBMIA) in 2005.

The device supports all commands of PJLink.

Commands

Connecting the monitor with RS-232C or connecting to a network via LAN, the control commands transmit and receive between the monitor and a connected device. It allows for Remote control unit of the monitor from a connected device.
Instructions for both control command types can be found in the external documents.

For details of each command, see the manual on the following website.

https://www.sharp-nec-displays.com/global/index.html

RS-232C Interface

PROTOCOL	RS-232C
BAUD RATE	9600 [bps]
DATA LENGTH	8 [bits]
PARITY	NONE
STOP BIT	1 [bit]
FLOW CONTROL	NONE

LAN Interface

PROTOCOL	TCP
PORT NUMBER	7142
COMMUNICATION SPEED	AUTO setting (10/100Mbps)

ASCII Control command

This monitor supports control command, which is listed in the “External_Control.pdf” (See page 75), but also supports common ASCII control command, which is used for controlling the monitor from a connected computer. For further information please visit our website.

TIP: If you turn off the monitor when [QUICK START] is [DISABLE], ASCII command control is not available over RS-232C. To activate ASCII command control while the monitor is off, set [QUICK START] to [ENABLE].

Parameter

Input command

Input signal name	Response	Parameter
DisplayPort	DisplayPort	DisplayPort
HDMI1	hdmi1	hdmi1 or hdmi
HDMI2	hdmi2	hdmi2
VGA	vga	vga
Media Player	mp	mp

Status command

Response	Error status
error:temp	Temperature abnormal
error:light	Inverter or backlight abnormal
error:system	System error

Proof of Play

This function allows sending of messages for the current status of the monitor by self-diagnosis.
For the Proof of Play function including self-diagnosis, please see the “External_Control.pdf”. See page 75.

Check item		Message
①	INPUT	DisplayPort, HDMI1, HDMI2, VGA(RGB), Media Player
②	Resolution	e.g. (H)1920, (V)1080, (H)3840, (V)2160 or No signal or Invalid signal
③	Audio signal	Audio in or No Audio in or N/A
④	Picture Image	Normal Picture or No Picture
⑤	AUDIO OUT	Normal Audio or No Audio
⑥	TIME	(year)/(month)/(day)/(hour)/(minutes)/(second)
⑦	EXPANSION DATA	00h: Normal Proof of Play event 01h: Proof of Play event is “last power on time” 10h: MEDIA PLAYER is stop 11h: MEDIA PLAYER is start 12h: MEDIA PLAYER is pause 13h: MEDIA PLAYER error occur 40h: Human detected (Human sensor Status) 41h: Human detect cleared (Human Sensor Status)

Example:

① HDMI1
② 3840 x 2160
③ Audio in
④ Normal Picture
⑤ Normal Audio
⑥ 2024/1/1/0h/0m/0s
⑦ 10h: MEDIA PLAYER is stop

Troubleshooting

Screen Image and Video Signal Issues

No picture

- The signal cable should be completely connected to the display card/computer.
- The display card should be completely seated in its slot.
- Check the main Power Switch, it should be in the ON position.
- Make sure both the computer and monitor are powered on.
- Make sure that a supported resolution has been selected on the display card or system being used. If in doubt, please refer to the user's manual of the display controller or system to change the resolution.
- Check the monitor and your display card with respect to compatibility and recommended signal timings.
- Check the signal cable connector for bent or pushed-in pins.
- The monitor automatically goes into standby at the preset time period after the video signal is lost. Press the power button on the Remote control unit or the monitor.
- If you unplug the signal cable when starting the computer, images may not be shown. Turn off the monitor and the computer and then connect the signal cable and turn on the computer and the monitor.
- Check for HDCP (High-bandwidth Digital Content Protection) content. HDCP is a system for preventing illegal copying of video data sent over a digital signal. If you are unable to view material via the digital inputs, this does not necessarily mean that the monitor is not functioning properly. With the implementation of HDCP, there may be cases in which certain content is protected by HDCP and might not be shown due to the decision/ intention of the HDCP community (Digital Content Protection, LLC).
- Some Option Boards are not compatible to the monitor. Please contact your supplier for a list of compatible Option Boards.
- Make sure that a USB-C cable connects to the USB Type-C1 (Upstream) port. If the cable is connected to the USB Type-C2 (Downstream) port, image is not displayed.
- When the input is USB Type-C1 (upstream), if the Power LED is glowing or blinking amber, an image cannot be shown even if inputs a input signal. If turning on the monitor by a signal input, set the [QUICK START] to [ENABLE]. If the [QUICK START] is disabled, turn on the monitor by using the remote control unit or the buttons on the monitor.

Image persistence

- Do not display a still picture for a long period, as this could cause a residual image.

TIP: As with all personal display devices, we recommend showing moving images, or changing still images at regular intervals whenever the screen is idle, or putting the monitor into standby or turning it off when not in use.

The image is blinking

- If you use a signal repeater or distributor or a long cable, this may cause image roughness or blink for a moment. In this case please connect the cable to the monitor directly without using a repeater or a distributor, or replace the cable with a higher quality cable. Using a twisted pair extender may cause image roughness depending on the environment where the monitor is in or the cable you are using. For further information please ask your supplier.
- Some HDMI cables may not show a correct image. If input resolution is 1920 x 2160, 3840 x 2160 or 4096 x 2160, please use an HDMI cable which is approved to support 4K resolution.
- If external noise is affected, please use shielded cables.

Troubleshooting

The image is unstable, unfocused or swimming is apparent

- The signal cable should be completely attached to the computer.
- Please adjust settings in the [ADJUST] of the [PICTURE] by checking the image on the screen
- When the display mode is changed, the OSD Image Adjust settings may need to be re-adjusted.
- Check the monitor and your display card with respect to compatibility and recommended signal timings.
- If text looks garbled, change the video mode to non-interlaced and use a 60 Hz refresh rate.
- The image may be distorted when turning the power on or changing the settings.

The image is not properly reproduced

- Use the OSD Image Adjust controls to increase or decrease the coarse adjustment.
- Depending on the connected device, colors may not display correctly. In this case, change the [SIGNAL FORMAT] setting to a selection other than [AUTO].
- Make sure that a supported resolution has been selected on the display card or system being used.
- If in doubt, please refer to the user's manual of the display card or system to change the resolution.

Selected resolution is not shown properly

- Check the Information OSD to verify the appropriate resolution has been selected.
- If the resolution you set is over or under a range, an "OUT of RANGE" window will appear in order to warn you. Please set supported resolution at the connected computer.

Video contrast is either too high or too low

- Check that the correct option for the [VIDEO RANGE] under [INPUT-ADVANCED] is selected for the input signal (see page 34). This only applies to video signals on the DisplayPort and HDMI inputs.

  Blacks are crushed and whites are clipped.
  Change the [VIDEO RANGE] to [RAW SIGNAL].
  Crushing blacks and clipping whites can occur when the monitor's [VIDEO RANGE] is set to [EXPANDED SIGNAL] while the source video signal's color levels are RGB Full (RGB 0-255), causing lost details in the shadows and highlights and the image appears overly high in contrast.

  Blacks are dark gray and whites are dull.
  Change the [VIDEO RANGE] to [EXPANDED SIGNAL].
  Dulling blacks and whites can occur when the [VIDEO RANGE] is set to [RAW SIGNAL] while the source video signal's color levels are RGB Limited (RGB 16-235), which effectively appears to prevent the monitor from obtaining its full brightness range and the image appears to be lacking in contrast.

Either light vertical or horizontal stripes may appear, depending on the specific image pattern. This is not a product fault or degradation.

Hardware Issues

The buttons and key do not respond

- Unplug the power cord of the monitor from the AC outlet to turn off and reset the monitor.
- Check the main power switch on the monitor.

No sound

- Check to see if the audio cable is properly connected.
- Check to see if [MUTE] is active. Use the Remote control unit to enable or disable the mute function.
- Check to see if [VOLUME] is set to a minimum.
- Check to see if the computer supports an audio signal through DisplayPort. If unsure, contact your supplier.
- An audio signal via the audio output connector cannot be adjusted by [SURROUND] and [EQUALIZER] in the OSD menu (see page 40).
- If HDMI-CEC audio device is not connected, please set [AUDIO RECEIVER] to [DISABLE] (see page 34).

The Remote control unit is not functioning

- The batteries may be drained. Please change the batteries, then check if the Remote control unit works.
- Check that the batteries are inserted correctly.
- Check that the Remote control unit is pointing at the remote control sensor on the monitor.
- Check the status of [LOCK SETTINGS] (see page 54).
- The remote control system may not function when direct sunlight or strong illumination strikes the remote control sensor of the monitor, or when there is an object in the path.

The SCHEDULE/OFF TIMER function is not working properly

- The [SCHEDULE] function will be disabled when the [OFF TIMER] is set.
- If the [OFF TIMER] function is enabled and the power to the monitor is turned off when the power supply is interrupted unexpectedly, then the [OFF TIMER] will be reset.

Snowy picture, poor sound in TV

- Check antenna/cable connection. Use a new cable if necessary.

The USB Hub does not operate

- Check to make sure that the USB cable is properly connected. Refer to your USB device user's manual.
- Check that the USB upstream port on the monitor is connected to the USB downstream port on the computer. Please make sure the computer is [ON] or [USB POWER] is [ON].

Interference in TV

- Check components for shielding, move away from the monitor if necessary.

USB or RS-232C or LAN control is not available

- Check RS-232C (reverse type) or the LAN cable. A category 5 or higher LAN cable is required for connection.

The monitor goes into standby automatically

- Please check [OFF TIMER] setting (see page 41).
- Set the [CEC] function to [OFF]. The monitor may go into standby state when a connected HDMI-CEC supported device goes into standby.
- Please check [POWER] in the [SCHEDULE INFORMATION].

Media player function does not recognize the USB flash drive

- Check that a USB flash drive is connected to the USB port.
- Check the file format of the USB flash drive if it is not recognized by the monitor.

■Power LED Patterns

Power LED on the monitor is not lit (no blue or red color can be seen) (see page 25)

- Make sure the power cord is properly connected to the monitor and the wall, and make sure the monitor's main power switch is ON.
- Make certain the computer is not in a power-saving mode (touch the keyboard or move the mouse).
- Check that the [POWER INDICATOR] is set to [ON] in the [SYSTEM] settings of the OSD menu (see page 46).

Power LED colors, except for blue, are blinking or glowing

- A certain failure might have occurred, please contact your supplier.
- If the monitor is powered off due to the internal temperature being higher than the normal operating temperature, the power LED will blink red six times. Please leave the monitor to cool down for a few minutes then turn it on again.
- The monitor could be in standby. Press the power button on the Remote control unit or on the monitor.

Specifications

■Compatible signal list

Signal name	Resolution	Scanning frequency		HDMI		DisplayPort	VGA(RGB)	Remarks
		Horizontal	Vertical	MODE1	MODE2			
VGA	640 x 480	31.5 kHz	60 Hz	Yes	Yes	Yes	Yes	
SVGA	800 x 600	37.9 kHz	60 Hz	Yes	Yes	Yes	Yes	
XGA	1024 x 768	48.4 kHz	60 Hz	Yes	Yes	Yes	Yes	
HD	1280 x 720	45.0 kHz	60 Hz	Yes	Yes	Yes	Yes	
WXGA	1280 x 768	47.8 kHz	60 Hz	Yes	No	Yes	Yes	
	1280 x 800	49.7 kHz	60 Hz	Yes	Yes	Yes	Yes	
SXGA	1280 x 1024	64 kHz	60 Hz	Yes	Yes	Yes	Yes	
WXGA	1360 x 768	47.7 kHz	60 Hz	Yes	No	Yes	Yes	
	1366 x 768	47.7 kHz	60 Hz	Yes	No	Yes	Yes	
SXGA+	1400 x 1050	65.3 kHz	60 Hz	Yes	Yes	Yes	Yes	
WXGA+	1440 x 900	55.9 kHz	60 Hz	Yes	Yes	Yes	Yes	
UXGA	1600 x 1200	75.0 kHz	60 Hz	Yes	Yes	Yes	Yes	
WSXGA+	1680 x 1050	65.3 kHz	60 Hz	Yes	Yes	Yes	Yes	
Full HD	1920 x 1080	67.5 kHz	60 Hz	Yes	Yes	Yes	Yes	Recommended resolution
WUXGA	1920 x 1200	74.6 kHz	60 Hz	No	Yes	Yes	Yes	Compressed image
4K/2	1920 x 2160	133.3 kHz	60 Hz	No	Yes	No	No	Compressed image
4K	3840 x 2160	54.0 kHz	24 Hz	Yes	Yes	Yes	No	Compressed image
	3840 x 2160	56.3 kHz	25 Hz	Yes	Yes	Yes	No	Compressed image
	3840 x 2160	65.7 kHz	30 Hz	No	No	Yes	No	Compressed image
	3840 x 2160	67.5 kHz	30 Hz	Yes	Yes	Yes	No	Compressed image
	3840 x 2160	112.5 kHz	50 Hz	No	Yes	Yes*	No	Compressed image
	3840 x 2160	133.3 kHz	60 Hz	No	No	Yes*	No	Compressed image
	3840 x 2160	135.0 kHz	60 Hz	No	Yes	Yes*	No	Compressed image
	4096 x 2160	54.0 kHz	24 Hz	Yes	Yes	Yes	No	Compressed image
	4096 x 2160	56.3 kHz	25 Hz	No	Yes	Yes	No	Compressed image
	4096 x 2160	67.5 kHz	30 Hz	No	Yes	Yes	No	Compressed image
	4096 x 2160	112.5 kHz	50 Hz	No	Yes	Yes*	No	Compressed image
	4096 x 2160	135.0 kHz	60 Hz	No	Yes	Yes*	No	Compressed image
HDTV (1080p)	1920 x 1080	27.0 kHz	24 Hz	Yes	Yes	Yes	No	
	1920 x 1080	28.1 kHz	25 Hz	Yes	Yes	Yes	No	
	1920 x 1080	33.8 kHz	30 Hz	Yes	Yes	Yes	No	
	1920 x 1080	56.3 kHz	50 Hz	Yes	Yes	Yes	No	
	1920 x 1080	67.5 kHz	60 Hz	Yes	Yes	Yes	No	
HDTV (1080i)	1920 x 1080 (interlace)	28.1 kHz	50 Hz	Yes	Yes	Yes	No	
	1920 x 1080 (interlace)	33.8 KHz	60 Hz	Yes	Yes	Yes	No	
HDTV (720p)	1280 x 720	37.5 kHz	50 Hz	Yes	Yes	Yes	No	
	1280 x 720	45.0 kHz	60 Hz	Yes	Yes	Yes	No	
SDTV (576p)	720 x 576	31.3 kHz	50 Hz	Yes	Yes	Yes	No	
SDTV (480p)	720 x 480	31.5 kHz	60 Hz	Yes	Yes	Yes	No	
SDTV (576i)	720 x 576 (interlace)	15.6 kHz	50 Hz	Yes	Yes	No	No	
SDTV (480i)	720 x 480 (interlace)	15.7 kHz	60 Hz	Yes	Yes	No	No	

*: Only HBR2 is set.

TIP:
- Depending on the input signal's resolution, characters may look blurred or figures may be distorted.
- Depending on the display card or driver used, the image may not be shown correctly.

■Product Specifications

Model	**PN-M322**
LCD component	32” Class [31-1/2 inch (80.13 cm) diagonal] TFT LCD
Max. resolution (pixels)	1920 x 1080
Max. colors	Approx. 16 million colors
Pixel pitch	0.364 mm (H) × 0.364 mm (V)
Brightness (typical)	450 cd/m^2*1
Contrast ratio (typical)	4000:1
Viewing angle	178° right/left/up/down (contrast ratio ≥ 10)
Screen active area inch (mm)	27-1/2 (W) x 15-7/16 (H) (698.40 x 392.85)
Response Time	8.0 ms (grey to grey, avg.)
Plug and play	VESA
Input terminals	
Video/Audio	DisplayPort x 1 HDMI x 2 VGA(RGB) x 1
Serial (RS-232C)	D-sub 9 pin x 1
Remote	Φ3.5 mm mini stereo jack x 1
Output terminals	
Audio	HDMI x 1 Φ3.5 mm mini stereo jack x 1
USB terminal	USB 2.0 (USB Type-A) x 1
LAN terminal	10 BASE-T/100 BASE-TX
Power supply terminal	5 V, 2 A (USB Type-A)
Speaker output	5 W + 5 W
Power requirement	AC 100 - 240 V, 0.8 A - 0.3 A, 50/60 Hz
Operating temperature*2	32 °F to 104 °F (0 °C to 40 °C)
Operating humidity	20% to 80% (without condensation)
Operating altitude	3000 m or less
Storage temperature	-4 °F to 140 °F (-20 °C to 60 °C)
Storage humidity	10% to 80 % (without condensation)/90 % - 3.5 % x (Temp - 40 °C) regarding over 40 °C
Power consumption*3 (Max/networked standby mode*4/standby mode*5/ off mode)	40 W (75 W/2.0 W/0.5 W/0.0 W)
Dimensions (excluding protrusions) inch (mm)	Approx. 28-5/8 (W) x 2-5/8 (D) x 16-3/4 (H) (726.5 x 66.5 x 425.4)
Weight lbs. (kg)	Approx. 13.9 (6.3)

*1: Brightness will depend on input mode and other picture settings.
Brightness level will decrease over time. Due to the nature of the equipment, it is not possible to precisely maintain a constant level of brightness.
*2: Temperature condition may change when using the monitor together with the optional equipments recommended by SHARP. In such cases, please check the temperature condition specified by the optional equipments.
*3: Factory setting. (When no optional part is attached.)
*4: Time for power management function: 10 sec.
*5: Time for power management function: 3 min. and 10 sec.

As a part of our policy of continuous improvement, SHARP reserves the right to make design and specification changes for product improvement without prior notice.
The performance specification figures indicated are nominal values of production units. There may be some deviations from these values in individual units.

■Dimensional Drawings

Note that the values shown are approximate values.

(Unit: mm)

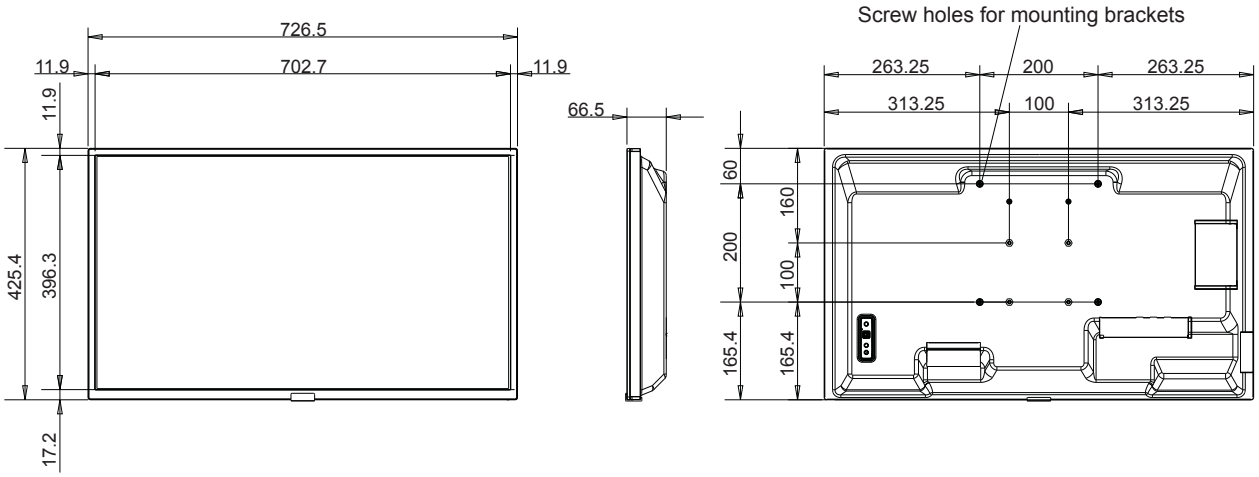

* When mounting the monitor, be sure to use a wall-mount bracket that complies with the VESA-compatible mounting method.
SHARP recommends using M4 screws and tighten the screws.
For 7-7/8 inch (200 mm) pitch, note that screw hole depth of the monitor is 3/8 inch (10 mm). The screw and hole should come together with over 1/4 inch (6 mm) length of thread.
For 3-15/16 inch (100 mm) pitch, note that screw hole depth of the monitor is 9/16 inch (14 mm). The screw and hole should come together with over 3/8 inch (10 mm) length of thread.
Loose mounting may cause the product to fall, resulting in serious personal injuries as well as damage to the product.
Use a bracket which has been approved for UL1678 standard, and which can endure at least 4 times or more the weight of the monitor.

Appendix-A External Resources

Additional specification documents and accessories, and optional software applications referenced in this product manual are listed below.

■Regional websites

Global: https://www.sharp-nec-displays.com/global/

North America: https://www.sharpusa.com/

Europe, Russia, Middle East and Africa: https://www.sharpnecdisplays.eu

■Additional Documentation

“External Control” PDF document

This document defines the communications protocol for externally controlling and querying the monitor via either RS-232C or LAN. The protocol uses encoded binary and requires calculation of checksums, and most functionality in the monitor can be controlled using these commands. A simpler protocol is also available for less demanding applications (see below).

This document is available for download from our website in your region.

A Python programming language based SDK (Software Development Kit) is also available that encapsulates this communications protocol into a Python library for rapid development.

https://github.com/SharpNECDisplaySolutions/necpdsdk

“ASCII Control Command - Reference Manual” PDF document

This document defines the communications protocol for externally controlling the basic functions of the monitor via LAN using a simple English-like syntax. It is suitable for easy integration into existing control systems. Functionality such as controlling and querying the power state, video inputs, volume, and status is available. The protocol uses ASCII encoding and doesn’t require calculation of checksums.

This document is available for download from our website in your region.

■Software

Display Wall Calibrator software
This software provides advanced video wall configuration and accurate color matching by calibrating the monitors using an external color sensor. It is useful when setting up multi-monitor installations - such as a video wall - to achieve the best possible brightness and color matching between screens and configuring settings applicable to the video wall. The software, available for Microsoft Windows and macOS, is available for purchase and may require the use of a supported external color sensor. Please contact an authorized dealer or see our website in your region for purchase information and availability.

NaViSet Administrator software
This free software is an advanced and powerful network based control, monitoring and asset management system for monitors and projectors. The software is available for Microsoft Windows and macOS.

The latest version of the NaViSet Administrator software is available. Please contact your dealer for more information.

Information Display Downloader

This software provides the latest applications and firmware to keep the monitor up to date. This software is available for Microsoft Windows. The Information Display Downloader can be downloaded from the following SHARP website.

https://business.sharpusa.com/product-downloads

https://www.sharp.eu/download-centre

Mounting Precautions (For SHARP dealers and service engineers)

Please read "Safety Precautions and Maintenance" carefully before installation.

Mounting the monitor requires expertise and the work must be carefully performed by a trained service person in accordance with the section.

Please note the following when mounting on a wall or ceiling:

- We recommend mounting interfaces that comply with UL1678 standard in North America.
- For detailed information, refer to the instructions included with the mounting equipment.

We strongly recommend using the screws as shown below.
If using screws longer than below mentioned, check the depth of the hole.

- This monitor and bracket must be installed on a wall which can endure at least 4 times or more the weight of the monitor. Install by the most suitable method for the material and the structure.
- Do not use an impact driver.
- After mounting, please carefully ensure the monitor is secure, and not able to come loose from the wall or mount.

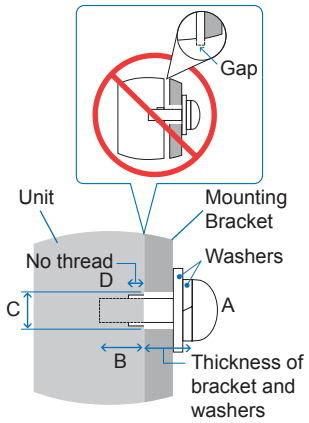

Mounting Interface Pitch	Screw Size (A)	(B)		Bracket Hole (C)	No Thread (D)	Recommended Fasten Force
3-15/16 x 3-15/16 inch (100 x 100 mm)	M4	3/8-9/16 inch (10-14 mm)	+ thickness of bracket and washer in length	≤ Ø 6 mm	1/4 inch (6 mm)	120-190 N•cm
7-7/8 x 7-7/8 inch (200 x 200 mm)		1/4-3/8 inch (6-10 mm)			1/16 inch (2 mm)	

■Attaching Mounting Accessories

Be careful to avoid tipping the monitor when attaching accessories.

1. Attach Mounting Accessories

Be careful to avoid tipping the monitor when attaching accessories.

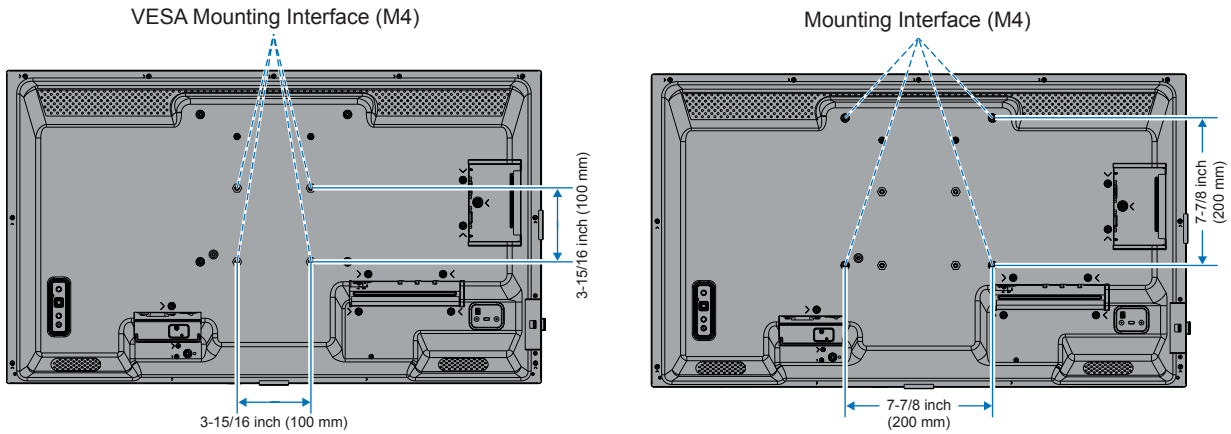

Mounting accessories can be attached with the monitor in the face down position. To avoid scratching the LCD panel, always place a soft cloth, such as a blanket that is larger than the monitor's screen area, on the table before laying the monitor face down. Make sure there is nothing on the table that can damage the monitor.

TIP:
- Prior to installation, place the monitor face down on a flat even surface that is larger than the monitor screen. Use a sturdy table that can easily support the weight of the monitor.
- To avoid scratching the LCD panel, always place a soft cloth, such as a blanket that is larger than the monitor's screen area, on the table before laying the monitor face down when installing the monitor stand or mounting accessories.

■Installing a Optional Table Top Stand

For installation, follow the instructions included with the stand. Use only those devices recommended by the manufacturer.

TIP:
- The monitor can only be used in the landscape orientation with the tabletop stand.
- Use the PN-ST321/ST-32M.
- The stands are not available for Australia and New Zealand.

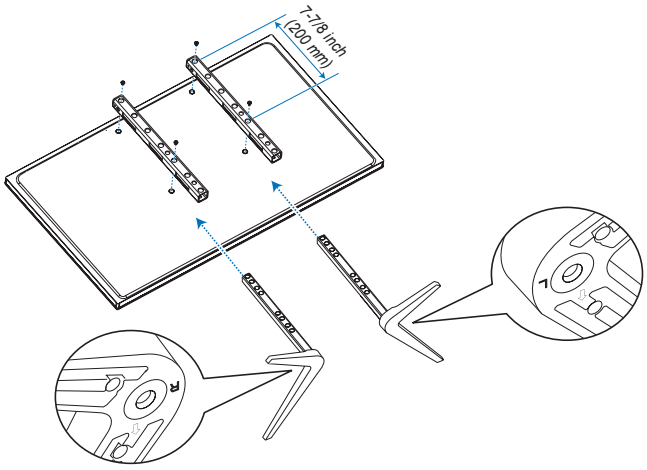

Height adjustment

1. The lines on the stand pole are indicators of the height adjustment (**Figure 1**). Please adjust the pipe to the lines.

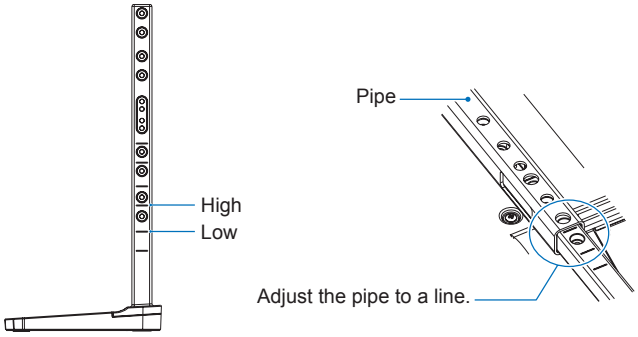

Figure 1

2. Please install the stand pole and the pipe with included screws. Please screw the two screw holes at the pipe (**Figure 2**).

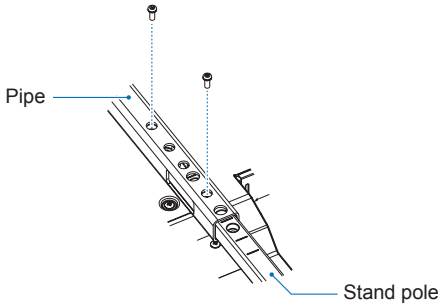

Figure 2

Manufacturer's Recycling and Energy Information

We are strongly committed to environmental protection and sees recycling as one of the company's top priorities in trying to minimize the burden placed on the environment. We are engaged in developing environmentally friendly products, and always strive to help define and comply with the latest independent standards from agencies such as ISO (International Organization for Standardization) and TCO (Swedish Trades Union).

Energy Saving

This monitor features an advanced energy saving capability. When a Display Power Management signal is sent to the monitor, the Energy Saving mode is activated. The monitor enters a single Energy Saving mode.

For additional information visit:

https://www.sharpusa.com/ (in USA)

https://www.sharpnecdisplays.eu (in Europe)

https://www.sharp-nec-displays.com/global/index.html (Global)

SHARP

SHARP CORPORATION

Rev.1