NZXT

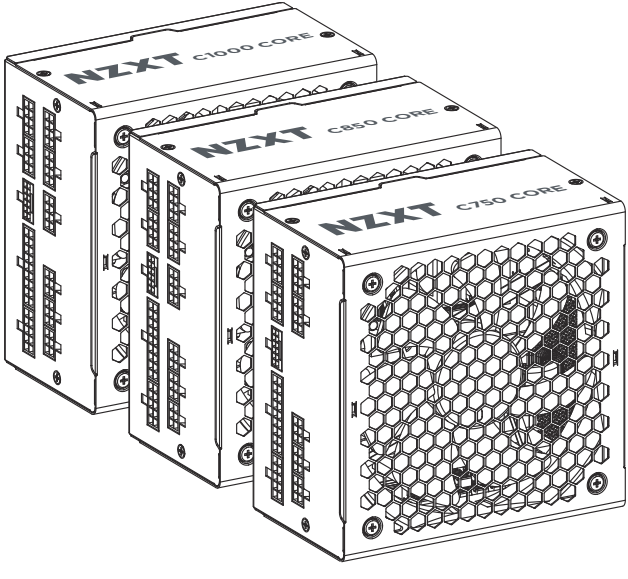

C SERIES GOLD CORE

750/850/1000 WATT 80 PLUS GOLD FULLY MODULAR LOW-NOISE ATX 3.1 POWER SUPPLY

80 PLUS GOLD

NZXT 7 YEAR

CYBENETICS ATX 3.1 PASS

CYBENETICS PLATINUM

CYBENETICS A++ C750 & C850

CYBENETICS A+ C1000

TABLE OF CONTENTS

VERSION 1.0, 2025/08/15

01.COMPONENT LIST 01

02.INSTALLATION 08

03.SPECIFICATIONS 16

04.NZXT GLOBAL WARRANTY POLICY 36

05.REGULATORY STATEMENT 39

06.限用物质及元素列表 / 限用物質及元素清單 47

07.SUPPORT AND SERVICE 48

01. COMPONENT LIST

LISTA DE COMPONENTES
LISTE DES COMPOSANTS
KOMPONENTENLISTE
ELENCO DEI COMPONENTI
LISTA DE COMPONENTES

구성품 목록
部品リスト
零件表
零件表

A	Power supply unit (C750/C850/C1000)	x1

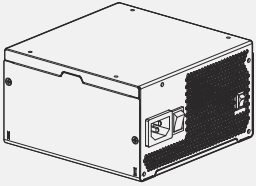

B	Motherboard Power (24-pin) Cable	x1

C	CPU Cable (8-pin)	x1

D	CPU Cable (4+4-pin)	x1

E	C1000/C850 PCIe Cable (8-pin to 6+2-pin)	x3
	C750 PCIe Cable (8-pin to 6+2-pin)	x2

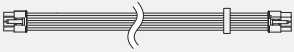

F	C1000/C850 12V-2x6 (12+4-pin) Cable (600W)	x1
	C750 12V-2x6 (12+4-pin) Cable (300W)	

G	SATA Cable (4 Connectors)	x2

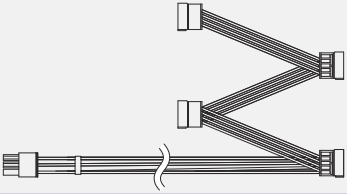

H	Peripheral Cable (3 Connectors)	x1

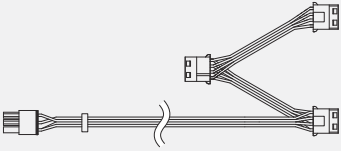

I	6-32 Mounting Screw	x4

J	AC Power Cord	x1

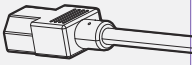

A . Fuente de alimentación
B . Cable de alimentación ATX de 24 pines
C . Cable de alimentación para CPU de 4+4 pines
D . Cable de alimentación para CPU de 8 pines
E . Cable de alimentación PCIe de 6+2 pines
F . C1000/C850 Cable PCIe 12 V-2x6 (16 pines, 12+4) (600W)
C750 Cable PCIe 12 V-2x6 (16 pines, 12+4) (300W)
G . Cable SATA
H . Cable para periféricos
I . Tornillos #6: 32
J . Cable de alimentación de CA

A . Bloc d'alimentation
B . Câble d'alimentation ATX 24 broches
C . Câble d'alimentation CPU 4+4 broches
D . Câble d'alimentation CPU 8 broches
E . Câble d'alimentation PCIe 6+2 broches
F . C1000/C850 Câble d'alimentation PCIe 12V-2x6 16 broches (12+4) (600W)
C750 Câble d'alimentation PCIe 12V-2x6 16 broches (12+4) (300W)
G . Câble SATA
H . Câble de périphériques
I . Vis #6-32
J . Cordon d'alimentation CA

A . Netzteil
B . 24-Pin ATX-Stromkabel
C . 4+4-Pin CPU-Stromkabel
D . 8-Pin CPU-Stromkabel
E . 6+2-Pin PCIe-Stromkabel
F . C1000/C850 16-Pin (12+4) 12V-2x6 PCIe-Stromkabel (600W)
C750 16-Pin (12+4) 12V-2x6 PCIe-Stromkabel (300W)
G . SATA-Kabel
H . Kabel für Peripheriegeräte
I . Schraube #6-32
J . Netzkabel (AC)

A . Unità di alimentazione
B . Cavo di alimentazione ATX a 24 pin
C . Cavo di alimentazione CPU a 4+4 pin
D . Cavo di alimentazione CPU a 8 pin
E . Cavo di alimentazione PCIe a 6+2 pin
F . C1000/C850 Cavo di alimentazione PCIe 2x6 a 12 V a 16 pin (12+4) (600W)
C750 Cavo di alimentazione PCIe 2x6 a 12 V a 16 pin (12+4) (300W)
G . Cavo SATA
H . Cavo periferiche
I . Vite #6-32
J . Cavo di alimentazione AC

A . Fonte de alimentação
B . Cabo de alimentação ATX de 24 pinos
C . Cabo de alimentação CPU de 4+4 pinos
D . Cabo de alimentação CPU de 8 pinos
E . Cabo de alimentação PCIe de 6+2 pinos
F . C1000/C850 Cabo de alimentação PCIe de 12 V-2x6 de 16 pinos (12+4) (600W)
C750 Cabo de alimentação PCIe de 12 V-2x6 de 16 pinos (12+4) (300W)
G . Cabo SATA
H . Cabo para periféricos
I . Parafuso #6-32
J . Cabo de alimentação AC

A . 전원 공급 장치
B . 24 핀 ATX 전원 케이블
C . 4+4 핀 CPU 전원 케이블
D . 8 핀 CPU 전원 케이블
E . 6+2 핀 PCIe 전원 케이블
F . C1000/C850 16 핀 (12+4) 12V-2x6 PCIe 전원 케이블 (600W)
C750 16 핀 (12+4) 12V-2x6 PCIe 전원 케이블 (300W)
G . SATA 케이블
H . 주변 기기 케이블
I . #6-32 나사
J . AC 전원 코드

A . 電源ユニット
B . 24 ピン ATX 電源ケーブル
C . 4+4 ピン CPU 電源ケーブル
D . 8 ピン CPU 電源ケーブル
E . 6+2 ピン PCIe 電源ケーブル
F . C1000/C850 16 ピン（12+4）12V-2x6 PCIe 電源ケーブル (600W)
C750 16 ピン（12+4）12V-2x6 PCIe 電源ケーブル (300W)
G . SATA ケーブル
H . 周辺機器ケーブル
I . ネジ #6-32
J . AC 電源コード

A . 电源供应器
B . 24-pin ATX 电源线
C . 4+4-pin CPU 电源线
D . 8-pin CPU 电源线
E . 6+2-pin PCIe 电源线
F . C1000/C850 16-pin (12+4) 12V-2x6 PCIe 电源线 (600W)
C750 16-pin (12+4) 12V-2x6 PCIe 电源线 (300W)
G . SATA 线
H . 外部设备线
I . 螺丝 #6-32
J . AC 电源线

A . 電源供應器
B . 24-pin ATX 電源線
C . 4+4-pin CPU 電源線
D . 8-pin CPU 電源線
E . 6+2-pin PCIe 電源線
F . C1000/C850 16-pin (12+4) 12V-2x6 PCIe 電源線 (600W)
C750 16-pin (12+4) 12V-2x6 PCIe 電源線 (300W)
G . SATA 線
H . 周邊設備線材
I . #6-32 螺絲
J . AC 電源線

PINOUT DIAGRAM

MOTHERBOARD

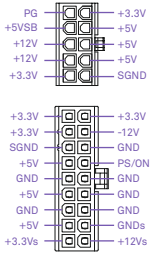

CPU

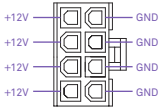

PCIE

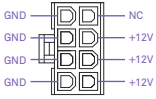

12V-2X6

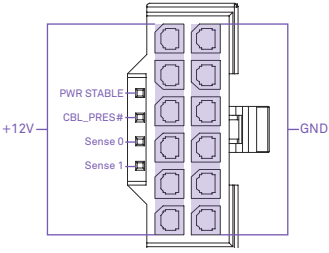

SATA

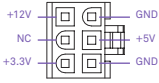

PERIPHERAL

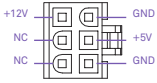

DC PANEL C750

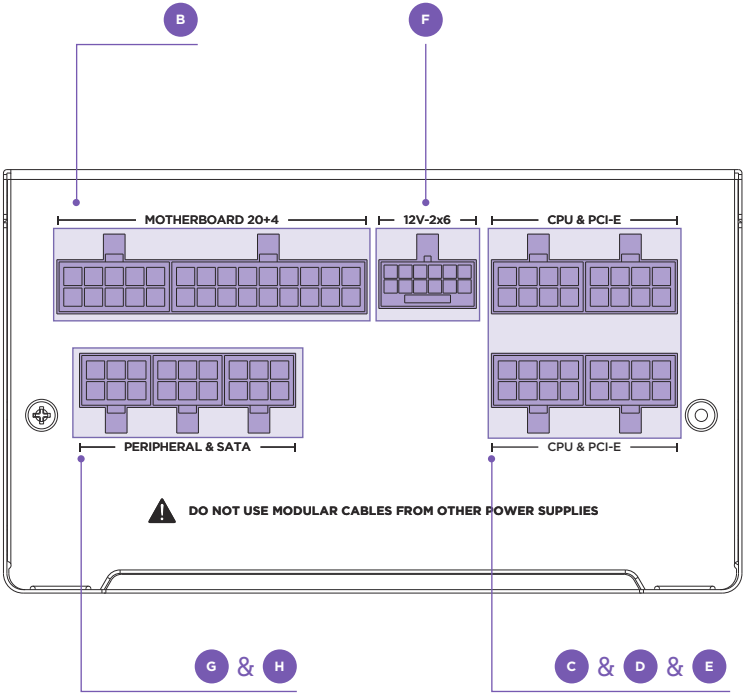

DC PANEL C850 / C1000

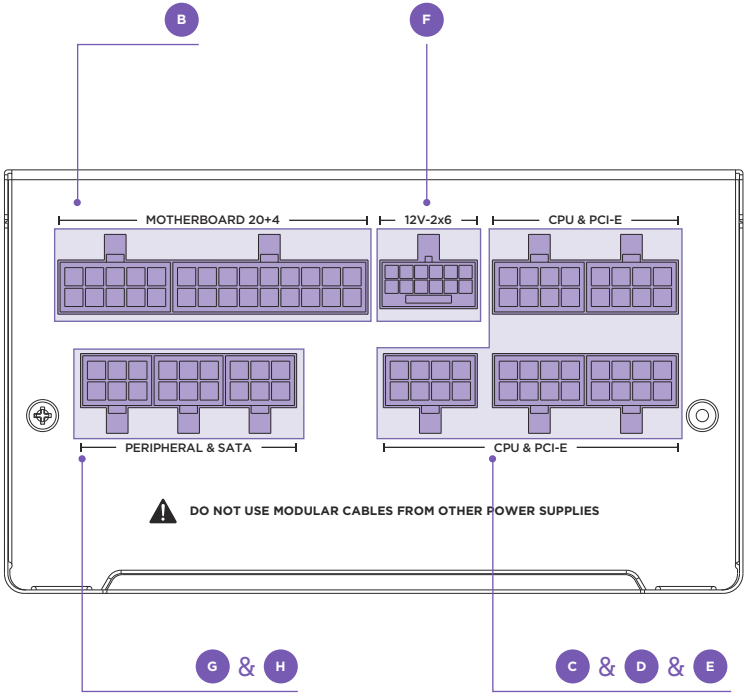

AC PANEL

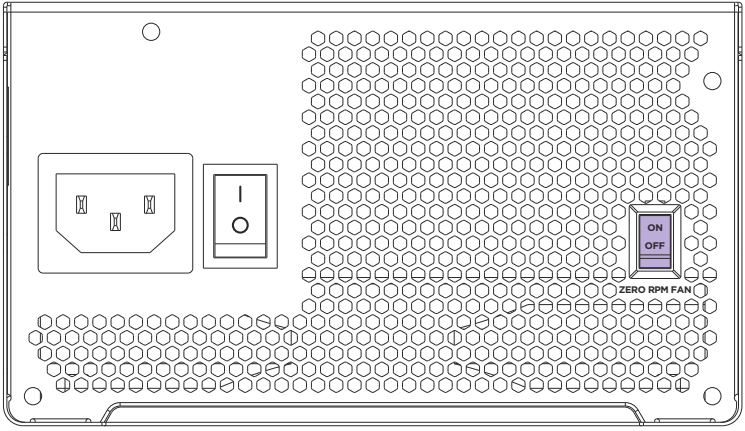

Enable zero RPM mode by switching the button to "On."
Activa el modo cero RPM cambiando el botón a "Encendido".
Activez le mode zéro RPM en basculant le bouton sur "On".
Aktivieren Sie den Null-Drehzahl-Modus, indem Sie den Schalter auf "Ein" stellen.
Abilita la modalità zero RPM spostando il pulsante su "On".
Ative o modo zero RPM mudando o botão para "Ligado."
버튼을 "켜기"로 전환하여 제로 RPM 모드를 활성화하십시오.
「オン」にスイッチを切り替えてゼロRPMモードを有効にします。
将按钮切换到“开”以启用零转速模式。
將按鈕切換到「開」以啟用零轉速模式。

02. INSTALLATION

INSTALACIÓN
INSTALLATION
INSTALLIEREN
INSTALLAZIONE
INSTALAÇÃO

설치
取り付け
安装
安裝

I	6-32 Mounting Screw	x4

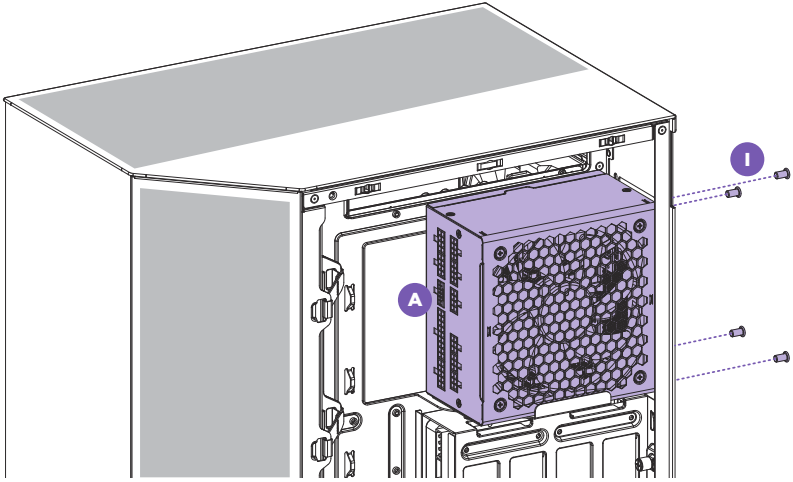

STEP 1

Install the power supply into the case using the provided screws.
Instale la fuente de alimentación en la caja utilizando los tornillos que se suministran.
Installez le bloc d'alimentation dans le boîtier à l'aide des vis fournies.
Montieren Sie das Netzteil unter Verwendung der Schrauben aus dem Lieferumfang im Gehäuse.
Installare l'alimentatore nel case utilizzando le viti in dotazione.
Instale a fonte de alimentação no gabinete usando os parafusos fornecidos.
제공된 나사를 사용하여 파워 서플라이를 케이스에 설치합니다.
付属のネジを使用してケースに電源を取り付けます。
使用随附的螺钉将电源安装到机箱中。
使用隨附的螺絲，在機殼中安裝電源供應器。

B	Motherboard Power (24-pin) Cable	x1

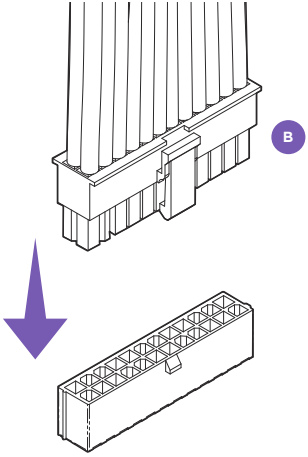

STEP 2

Connect the 20+4-pin power to the motherboard.
Conecte la alimentación de 20+4 pines a la placa base.
Branchez le connecteur à 20+4 broches sur la carte mère.
Schließen Sie das 20+4-polige Netzkabel an das Mainboard an.
Collegare l'alimentazione a 20+4 pin alla scheda madre.
Conecte a alimentação de 20+4 pinos à placa-mãe.
20+4 핀 파워를 마더보드에 연결합니다.
20+4 ピン電源用コネクタをマザーボードに接続します。
将 20+4 针电源连接到主板。
將 20+4 針腳電源線接到主機板。

C	4+4-pin CPU power cable	x1

D	CPU Cable (4+4-pin)	x1

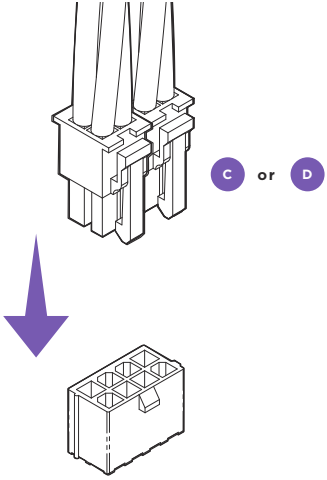

STEP 3

Connect the 8-pin / 4+4-pin CPU power.
Conecte la alimentación de CPU de 8 pines / 4+4 pines.
Branchez le(s) connecteur(s) d'alimentation processeur à 8 broches / 4+4 broches.
Schließen Sie das 8-polige / 4+4-polige CPU-Kabel an.
Collegare l'alimentazione CPU a 8 pin / 4+4 pin.
Conecte a alimentação da CPU de 8 pinos / 4+4 pinos.
8 핀 / 4+4 핀 CPU 전원을 연결합니다.
8 ピン / 4+4 ピン CPU 電源用コネクタを接続します。
连接 8 针 / 4+4 针 CPU 电源。
接上 8 針腳 / 4+4 針腳 CPU 電源線。

F	C1000/C850 12V-2x6 (12+4-pin) Cable (600W) C750 12V-2x6 (12+4-pin) Cable (300W)	x1

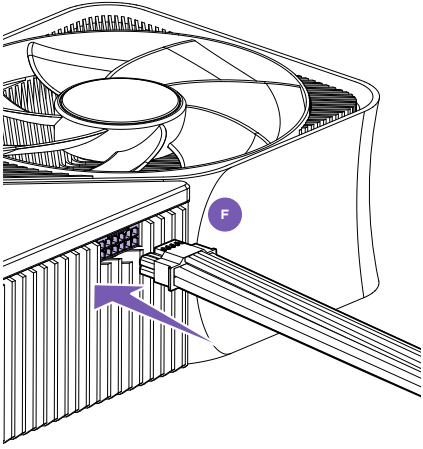

WARNING

Please fully insert the cable before use.

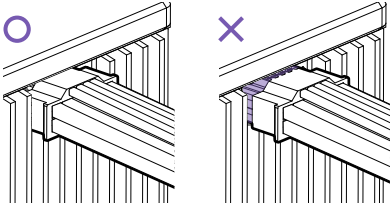

STEP 4 **Option 1** **To support Nvidia 50/40 Series graphics cards**

Connect the 16-pin PCI-E power to your graphics card as required.
Conecta el cable de alimentación PCIe de 16 pines a la tarjeta gráfica según sea necesario.
Branche l'alimentation PCI-e 16 broches à ta carte graphique tel que requis.
Verbinde das 16 Pin PCI-e-Kabel bei Bedarf mit deiner Grafikkarte.
Collegare l'alimentazione PCI-E 16 pin alla scheda grafica come richiesto.
Ligue o cabo PCI-E de 16 pinos à sua placa gráfica conforme necessário.
요구에 따라 PCI-E 전원을 그래픽 카드에 연결합니다.
必要に応じて16ピンPCI-e電源をグラフィックカードに接続してください。
根据需要将16针PCI-E电源连接至您的显卡。
根據需要將16針PCI-E電源連接至您的顯卡。

E	C1000/C850 6+2-pin PCIe power cable	x3
	C750 6+2-pin PCIe power cable	x2

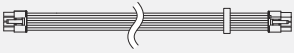

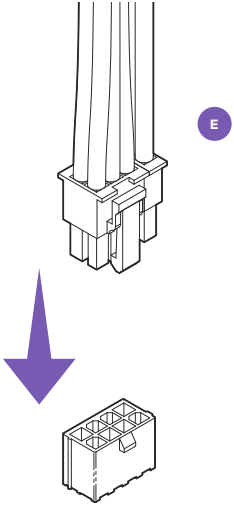

STEP 4 **Option 2**

Connect the PCI-E power to your graphics card as required.
Conecte la alimentación de PCI-E a su tarjeta gráfica según sea necesario.
Branchez le(s) connecteur(s) d'alimentation PCI-E à votre carte graphique, en fonction de vos besoins.
Verbinden Sie ggf. das PCI-E-Kabel mit der Grafikkarte.
Collegare l'alimentazione PCI-E alla scheda grafica secondo la configurazione in uso.
Conecte a alimentação PCI-E às suas placas gráficas conforme necessário.
요구에 따라 PCI-E 전원을 그래픽 카드에 연결합니다.
必要に応じて PCI-E 電源用コネクタをグラフィックスカードに接続します。
按要求将 PCI-E 电源连接到显卡。
如有需要，將 PCI-E 電源線接到顯示卡。

G	SATA Cables	x2

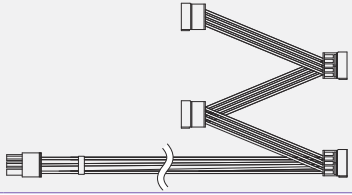

H	Peripherals Cable	x1

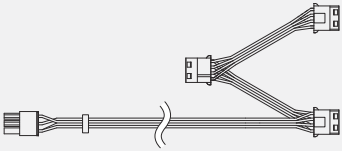

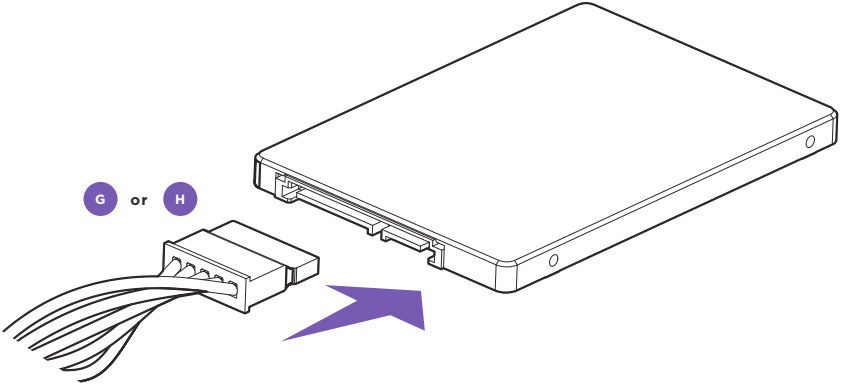

STEP 5

Connect the SATA and peripheral power as needed.
Conecte la alimentación periférica y de SATA según sea necesario.
Branchez les connecteurs SATA et périphériques, en fonction de vos besoins.
Schließen Sie SATA- und Peripheriekabel nach Bedarf an.
Collegare l'alimentazione SATA e per le periferiche secondo la configurazione in uso.
Conecte as alimentações SATA e para periféricos conforme necessário.
필요한 경우 SATA 및 주변기기 전원을 연결합니다.
必要に応じて SATA およびペリフェラル電源用コネクタを接続します。
按需连接 SATA 和外围设备电源。
如有需要，接上 SATA 和周邊設備電源線。

J	AC power cord	x1

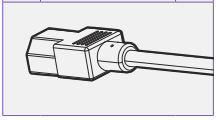

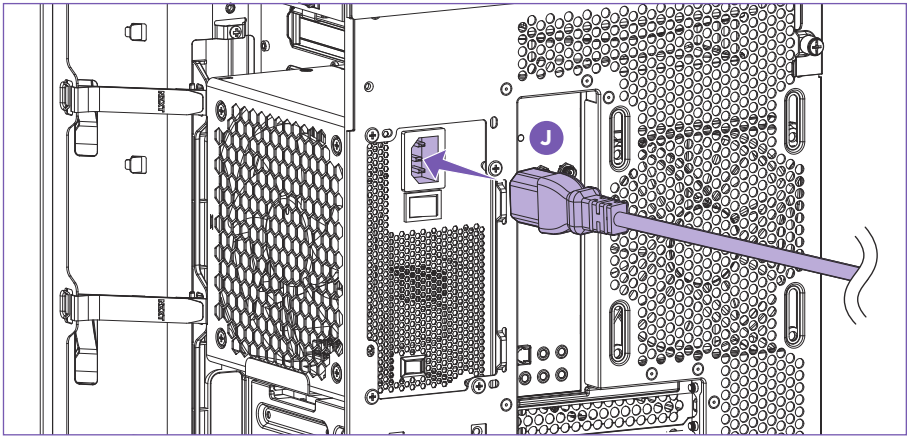

STEP 6

Connect the AC power cord to the wall and turn on the power switch.
Conecte el cable de alimentación de CA a la pared y encienda el interruptor.
Branchez le câble d'alimentation CA à la prise murale et mettez le bloc d'alimentation sous tension.
Verbinden Sie das Netzkabel mit einer Steckdose und schalten Sie das Gerät ein.
Collegare il cavo di alimentazione CA alla presa elettrica a parete e accendere l'interruttore dell'alimentazione.
Conecte o cabo de alimentação CA à tomada e ligue o botão de alimentação.
AC전원 코드를 벽 콘센트에 연결한 다음 전원 스위치를 켭니다.
AC電源コードをコンセントに接続し、電源スイッチをオンにします。
将交流电源线连接到机箱壁并打开电源开关。
將 AC 電源線插到牆上插座，打開電源開關。

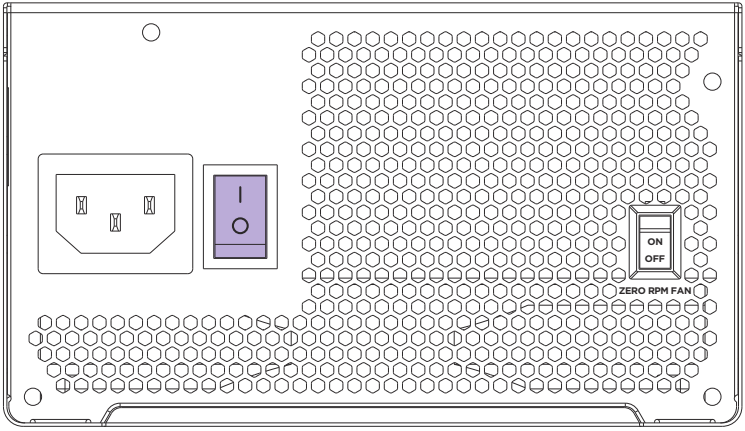

Set switch to (I) for ON.
Ponga el interruptor en (I) para ENCENDER.
Réglez l'interrupteur sur (I) pour ALLUMER.
Schalten Sie den Schalter auf (I) für EIN.
Imposta l'interruttore su (I) per ACCESO.
Ajuste o interruptor para (I) para LIGADO.
스위치를 (I)로 설정하여 켭니다.
スイッチを(I)にしてONにします。
将开关设置为 (I) 以打开。
將開關設置為 (I) 開。

03. SPECIFICATIONS

ESPECIFICACIONES
SPÉCIFICATIONS
TECHNISCHE DATEN
SPECIFICHE
ESPECIFICAÇÕES

사양
仕様
规格
規格

	C750				C850				C1000			
Dimensions	150 x 86 x 150 mm											
GENERAL												
Form Factor	ATX											
ATX Version	3.1											
80 PLUS Rating	Gold											
Modular	Fully modular											
Capacitors	105°C performance capacitors											
Cable Type	Individually embossed with cable comb											
Zero RPM Fan Mode	Yes											
AC Input Rating	100V-240V~ 10A-5A 50Hz-60Hz 200V-240V~ 5A 50Hz-60Hz (Only for South Korea)				100V-240V~ 10A-5A 50Hz-60Hz 200V-240V~ 5A 50Hz-60Hz (Only for South Korea)				100V-240V~ 12A-6A 50Hz-60Hz 200V-240V~ 6A 50Hz-60Hz (Only for South Korea)			
DC Output	+3.3V	+5V	+12V	+5VSB	+3.3V	+5V	+12V	+5VSB	+3.3V	+5V	+12V	+5VSB
Max Load	20A	20A	62.5A	3A	20A	20A	70.8A	3A	20A	20A	83.3A	3A
Max Output Power	120W		750W	15W	120W		850W	15W	120W		1000W	15W
Total Power	750W				850W				1000W			
Energy Efficiency	80 Plus Gold 20% loading: 91.63% @ 115 V 50% loading: 92.11% @ 115 V 100% loading: 89.53% @ 115 V				80 Plus Gold 20% loading: 91.58% @ 115 V 50% loading: 92.1% @ 115 V 100% loading: 89.33% @ 115 V				80 Plus Gold 20% loading: 92.22% @ 115 V 50% loading: 92.18% @ 115 V 100% loading: 89.1% @ 115 V			
Temperature	0 – 50°C (Continuous Full Load)											
Regulation & Certification	CE, UKCA, FCC, IC, BSMI, CB (IEC 62368-1 Ed. 3) , RCM, KC											
PF Correction	Active @ 0.99											
Protections	OVP (Over Voltage Protection), UVP (Under Voltage Protection), SCP (Short Circuit Protection), OTP (Over Temperature Protection), OPP (Over Power Protection), OCP (Over Current Protection)Current)											

03. SPECIFICATIONS

ESPECIFICACIONES
SPÉCIFICATIONS
TECHNISCHE DATEN
SPECIFICHE
ESPECIFICAÇÕES

사양
仕様
规格
規格

CABLE LENGTH & CONNECTOR QUANTITY	> 24-pin ATX Power Cable: 600 mm (1) > 4+4-pin CPU Power Cable: 700 mm (1) > 8-pin CPU Power Cable: 700 mm (1) > 6+2-pin PCIe Power Cable: 650 mm (C750: 2 / C850 & C1000: 3) > 16-pin (12+4) 12V-2x6 PCIe power cable: 650 mm (1) > SATA Cables: 500 + 100 mm (8) > Peripherals Cable: 500 + 100 mm (3)
FAN SPECS	
Size	135 mm
Type	PWM
Speed	2,300 ± 10% RPM
Airflow	103.36 CFM
Noise Level	40.5 dBA
Bearing	Fluid dynamic bearing
OPERATION	
MTBF	100,000 hours
WARRANTY	7 Years

03. SPECIFICATIONS

ESPECIFICACIONES
SPÉCIFICATIONS
TECHNISCHE DATEN
SPECIFICHE
ESPECIFICAÇÕES

사양
仕様
规格
規格

	C750				C850				C1000			
DIMENSIONES	150 x 86 x 150 mm											
GENERAL												
Factor de forma	ATX											
Versión ATX	3.1											
Clasificación 80 PLUS	Gold											
Modular	Totalmente modular											
Condensadores	Condensadores de alto rendimiento a 105 °C											
Tipo de cable	Estampado individual con peine de cable											
Modo de ventilador a cero RPM	sí											
POTENCIA DE ENTRADA DE CA	100V-240V~ 10A-5A 50Hz-60Hz 200V-240V~ 5A 50Hz-60Hz (Solo para Corea del Sur)				100V-240V~ 10A-5A 50Hz-60Hz 200V-240V~ 5A 50Hz-60Hz (Solo para Corea del Sur)				100V-240V~ 12A-5A 50Hz-60Hz 200V-240V~ 6A 50Hz-60Hz (Solo para Corea del Sur)			
Salida CC	+3.3V	+5V	+12V	+5VSB	+3.3V	+5V	+12V	+5VSB	+3.3V	+5V	+12V	+5VSB
Carga máx.	20A	20A	62.5A	3A	20A	20A	70.8A	3A	20A	20A	83.3A	3A
Potencia de salida máx.	120W		750W	15W	120W		850W	15W	120W		1000W	15W
Potencia total	750W				850W				1000W			
EFICIENCIA ENERGÉTICA	Clasificación 80 PLUS: Gold Carga al 20 %: 91,63 % a 115 V Carga al 50 %: 92,11 % a 115 V Carga al 100 %: 89,53 % a 115 V				Clasificación 80 PLUS: Gold Carga al 20 %: 91,58 % a 115 V Carga al 50 %: 92,1 % a 115 V Carga al 100 %: 89,33 % a 115 V				Clasificación 80 PLUS: Gold Carga al 20 %: 92,22 % @ 115 V Carga al 50 %: 92,18 % @ 115 V Carga al 100 %: 89,1 % @ 115 V			
Temperatura	0 – 50° C (carga completa continua)											

03. SPECIFICATIONS

ESPECIFICACIONES
SPÉCIFICATIONS
TECHNISCHE DATEN
SPECIFICHE
ESPECIFICAÇÕES

사양
仕様
规格
規格

Reglamentación y certificación	CE, UKCA, FCC, IC, BSMI, CB (IEC 62368-1 Ed. 3) , RCM y KC
Corrección del FP	Activa @ 0,99
Protecciones	OVP (protección contra sobretensión), UVP (protección contra subtensión), SCP (protección contra cortocircuito), OTP (protección contra sobretemperatura), OPP (protección contra sobrepotencia), OCP (protección contra sobrecorriente)
LONGITUD DEL CABLE Y CANTIDAD DE CONECTORES	> Cable de alimentación ATX de 24 pines: 600 mm (1) > Cable de alimentación para CPU de 4+4 pines: 700 mm (1) > Cable de alimentación para CPU de 8 pines: 700 mm (1) > Cable de alimentación PCIe de 6+2 pines: 650 mm (C750: 2 / C850 & C1000: 3) > Cable de alimentación PCIe de 16 pines (12+4) 12 V-2x6: 650 mm (1) > Cables SATA: 500 + 100 mm (8) > Cable para periféricos: 500 + 100 mm (3)
ESPECIFICACIONES DEL VENTILADOR	
Tamaño	135 mm
Tipo	MAP
Velocidad	2300 ± 10 % RPM
Flujo de aire	103,36 CFM
Nivel de ruido	40,5 dBA
Rodamiento	Rodamiento fluidodinámico
FUNCIONAMIENTO	
MTBF	100 000 horas
GARANTÍA	7 años

03. SPECIFICATIONS

ESPECIFICACIONES
SPÉCIFICATIONS
TECHNISCHE DATEN
SPECIFICHE
ESPECIFICAÇÕES

사양
仕様
规格
規格

	C750				C850				C1000			
Dimensions	150 x 86 x 150 mm											
CARACTÉRISTIQUES GÉNÉRALES												
Format (Form Factor)	ATX											
Version ATX	3.1											
Classement 80 PLUS	Gold											
Modulaire	Entièrement modulaire											
Condensateurs	Condensateurs de performance 105 °C											
Type de câble	Individuellement gainés avec peigne à câble											
Mode ventilateur Zero RPM	Oui											
CLASSIFICATION D'ENTRÉE CA	100 – 240 Vac : 10 – 5 A, 50 – 60 Hz 200 – 240 Vac : 5 A 50 Hz-60 Hz (Uniquement pour la Corée du Sud)				100 – 240 Vac : 10 – 5 A, 50 – 60 Hz 200 – 240 Vac : 5 A 50 Hz - 60 Hz (Uniquement pour la Corée du Sud)				100 – 240 Vac : 12 – 5 A, 50 – 60 Hz 200 – 240 Vac : 6 A, 50 – 60 Hz (Uniquement pour la Corée du Sud)			
Sortie CC	+3.3V	+5V	+12V	+5VSB	+3.3V	+5V	+12V	+5VSB	+3.3V	+5V	+12V	+5VSB
Carga máx.	20A	20A	62.5A	3A	20A	20A	70.8A	3A	20A	20A	83.3A	3A
Puissance de sortie max	120W		750W	15W	120W		850W	15W	120W		1000W	15W
Potencia total	750W				850W				1000W			
EFFICACITÉ ÉNERGÉTIQUE	Classement 80 PLUS: Gold Charge de 20%: 91,63 % @ 115 V Charge de 50%: 92,11 % @ 115 V Charge de 100%: 89,53 % @ 115 V				Classement 80 PLUS: Gold Charge de 20%: 91,58 % @ 115 V Charge de 50%: 92,1 % @ 115 V Charge de 100%: 89,33 % @ 115 V				Classement 80 PLUS: Gold Charge de 20%: 92,22 % @ 115 V Charge de 50%: 92,18 % @ 115 V Charge de 100%: 89,1 % @ 115 V			
Température	0 – 50 °C (Charge complète continue)											
Régulations & certifications	CE, UKCA, FCC, IC, BSMI, CB (IEC 62368-1 Ed. 3) , RCM, KC											
Correction du facteur de puissance (PFC)	Active @ 0,99											
Protections	OVP (protection contre les surtensions), UVP (protection contre les sous-tensions), SCP (protection contre les courts-circuits), OTP (protection contre les surchauffes), OPP (protection contre les surpuissances), OCP (protection contre les surintensités)											

03. SPECIFICATIONS

ESPECIFICACIONES
SPÉCIFICATIONS
TECHNISCHE DATEN
SPECIFICHE
ESPECIFICAÇÕES

사양
仕様
规格
規格

LONGUEUR DES CÂBLES & QUANTITÉ DE CONNECTEURS	> Câble d'alimentation ATX 24 broches: 600 mm (1) > Câble d'alimentation CPU 4+4 broches: 700 mm (1) > Câble d'alimentation CPU 8 broches: 700 mm (1) > Câble d'alimentation PCIe 6+2 broches: 650 mm (C750: 2 / C850 & C1000: 3) > Câble d'alimentation PCIe 12V-2x6 16 broches (12+4): 650 mm (1) > Câbles SATA: 500 + 100 mm (8) > Câble pour périphériques: 500 + 100 mm (3)
SPÉCIFICATIONS DU VENTILATEUR	
Taille	135 mm
Type	PWM
Vitesse	2,300 ± 10% RPM
Flux d'air	103.36 CFM
Niveau sonore	40.5 dBA
Roulement	Palier dynamique fluide (FDB)
FONCTIONNEMENT	
MTBF	100 000 heures
GARANTIE	7 ans

03. SPECIFICATIONS

ESPECIFICACIONES
SPÉCIFICATIONS
TECHNISCHE DATEN
SPECIFICHE
ESPECIFICAÇÕES

사양
仕様
规格
規格

	C750				C850				C1000			
ABMESSUNGEN	150 x 86 x 150 mm											
ALLGEMEINES												
Formfaktor	ATX											
ATX-Version	3.1											
80-PLUS-Zertifizierung	Gold											
Modularität	Vollmodular											
Kondensatoren	105°C-Leistungskondensatoren											
Kabeltyp	Einzeln gesleevt mit Kabelkamm											
Zero-RPM-Lüftermodus	Ja											
AC-EINGANGSWERTE	100-240 V 10-5 A, 50-60 Hz 200-240 V 5 A, 50-60 Hz (Nur für Südkorea)				100-240 V 10 – 5 A, 50 – 60 Hz 200-240 V 5 A, 50 Hz – 60 Hz (Nur für Südkorea)				100-240 V 12 – 5 A, 50 – 60 Hz 200-240 V 6A 50Hz-60Hz (Nur für Südkorea)			
Gleichstrom-Ausgang	+3.3V	+5V	+12V	+5VSB	+3.3V	+5V	+12V	+5VSB	+3.3V	+5V	+12V	+5VSB
Max. Last	20A	20A	62.5A	3A	20A	20A	70.8A	3A	20A	20A	83.3A	3A
Potencia de salida máx.	120W		750W	15W	120W		850W	15W	120W		1000W	15W
Gesamtleistung	750W				850W				1000W			
ENERGIEEFFIZIENZ	80-PLUS-Zertifizierung: Gold 20 % Last: 91,63 % @ 115 V 50 % Last: 92,11 % @ 115 V 100 % Last: 89,53 % @ 115 V				80-PLUS-Zertifizierung: Gold 20 % Last: 91,58 % @ 115 V 50 % Last: 92,1 % @ 115 V 100 % Last: 89,33 % @ 115 V				80-PLUS-Zertifizierung: Gold 20 % Last: 92,22 % @ 115 V 50 % Last: 92,18 % @ 115 V 100 % Last: 89,1 % @ 115 V			
Temperatur	0 – 50°C (Dauerbetrieb bei Volllast)											
Regulierung und Zertifizierung	CE, UKCA, FCC, IC, BSMI, CB (IEC 62368-1 Ed. 3) , RCM, KC											
PFC (Leistungsfaktorkorrektur)	Aktiv @ 0,99											
Schutzschaltungen	OVP (Überspannungsschutz), UVP (Unterspannungsschutz), SCP (Kurzschlussschutz), OTP (Überhitzungsschutz), OPP (Überlastschutz), OCP (Überstromschutz)											

03. SPECIFICATIONS

ESPECIFICACIONES
SPÉCIFICATIONS
TECHNISCHE DATEN
SPECIFICHE
ESPECIFICAÇÕES

사양
仕様
规格
規格

KABELLÄNGE & ANSCHLUSSANZAHL	> 24-Pin ATX-Stromkabel: 600 mm (1) > 4+4-Pin CPU-Stromkabel: 700 mm (1) > 8-Pin CPU-Stromkabel: 700 mm (1) > 6+2-Pin PCIe-Stromkabel: 650 mm (C750: 2 / C850 & C1000: 3) > 16-Pin (12+4) 12-V-2x6-PCIe-Stromkabel: 650 mm (1) > SATA-Kabel: 500 + 100 mm (8) > Peripherie-Kabel: 500 + 100 mm (3)
LÜFTERSPEZIFIKATIONEN	
Größe	135 mm
Typ	PWM
Drehzahl	2300 ± 10 % U/min
Luftstrom	175,6 m^3/h
Geräuschpegel	40,5 dB(A)
Lager	Fluiddynamisches Lager (FDB)
BETRIEB	
MTBF	100.000 Stunden
GARANTIE	7 Jahre

03. SPECIFICATIONS

ESPECIFICACIONES
SPÉCIFICATIONS
TECHNISCHE DATEN
SPECIFICHE
ESPECIFICAÇÕES

사양
仕様
规格
規格

	C750				C850				C1000			
DIMENSIONI	150 x 86 x 150 mm											
GENERALE												
Fattore di forma	ATX											
Fattore di forma	3.1											
Versione ATX	Gold											
Valutazione 80 Plus	Completamente modulare											
Modularità	Condensatori ad alte prestazioni da 105°C											
Condensatori	Cavi con guaina individuale e pettine ferma-cavo											
Tipo di cavi	Sì											
VALUTAZIONE INGRESSO AC	100-240 Vac: 10-5 A, 50-60 Hz 200-240 Vac: 5 A, 50 Hz – 60 Hz (Valido solo in Corea)				100-240 Vac: 10-5 A, 50-60 Hz 200-240 Vac: 5 A, 50 Hz – 60 Hz (Valido solo in Corea)				100-240 Vac: 12-5 A, 50-60 Hz 200-240 Vac: 6 A, 50 Hz – 60 Hz (Valido solo in Corea)			
VALUTAZIONE USCITA DC	+3.3V	+5V	+12V	+5VSB	+3.3V	+5V	+12V	+5VSB	+3.3V	+5V	+12V	+5VSB
CC uscita	20A	20A	62.5A	3A	20A	20A	70.8A	3A	20A	20A	83.3A	3A
Energia massima di uscita	120W		750W	15W	120W		850W	15W	120W		1000W	15W
Energia totale	750W				850W				1000W			
EFFICIENZA ENERGETICA (EVT)	Classificazione 80 PLUS: Oro Carico al 20%: 91,63% @ 115 V Carico al 50%: 92,11% @ 115 V Carico al 100%: 89,53% @ 115 V				Classificazione 80 PLUS: Oro Carico al 20%: 91,58% @ 115 V Carico al 50%: 92,1% @ 115 V Carico al 100%: 89,33% @115V				Classificazione 80 PLUS: Oro Carico al 20%: 92,22% @ 115 V Carico al 50%: 92,18% @ 115 V Carico al 100%: 89,1% @115V			
Temperatura	0-50 °C (carico pieno continuo)											
Normative e certificazioni	CE, UKCA, FCC, IC, BSMI, CB (IEC 62368-1 3ª ed.), RCM, KC											
Correzione fattore di potenza	Attivo @ 0,99											
Protezioni	OVP (protezione da sovratensione), UVP (protezione da sottotensione), SCP (protezione da corto circuito), OTP (protezione da sovratemperatura), OPP (protezione da sovralimentazione), OCP (protezione da sovracorrente)											

03. SPECIFICATIONS

ESPECIFICACIONES
SPÉCIFICATIONS
TECHNISCHE DATEN
SPECIFICHE
ESPECIFICAÇÕES

사양
仕様
规格
規格

LUNGHEZZA CAVI E QUANTITÀ DI CONNETTORI	> Cavo di alimentazione CPU 4+4 pin: 600 mm (1) > Cavo di alimentazione CPU 8 pin: 700 mm (1) > Cavo di alimentazione PCIe 6+2 pin: 700 mm (1) > Cavo di alimentazione PCIe 6+2 pin: 650 mm (C750: 2 / C850 & C1000: 3) > Cavo di alimentazione PCIe 16 pin (12+4) 12V-2x6: 650 mm (1) > Cavi SATA: 500 + 100 mm (8) > Cavo per periferiche: 500 + 100 mm (3)
SPECIFICHE DELLA VENTOLA	
Dimensioni	135 mm
Tipo	PWM
Velocità	2.300 ± 10% RPM
Flusso d'aria	103,36 CFM
Livello di rumore	40,5 dBA
Cuscinetti	Cuscinetto fluidodinamico
FUNZIONAMENTO	
MTBF	100.000 ore
GARANZIA	7 anni

03. SPECIFICATIONS

ESPECIFICACIONES
SPÉCIFICATIONS
TECHNISCHE DATEN
SPECIFICHE
ESPECIFICAÇÕES

사양
仕様
规格
規格

	C750				C850				C1000			
DIMENSÕES	150 x 86 x 150 mm											
GERAL												
Fator de forma	ATX											
Versão ATX	3.1											
Classificação 80 PLUS	Gold											
Modular	Totalmente modular											
Capacitores	Capacitores de desempenho de 105°C											
Tipo de cabo	Individualmente embutido com organizador de cabos											
Modo de ventilador com zero RPM	Sim											
CLASSIFICAÇÃO DE ENTRADA AC	100 a 240 VAC: 10 a 5 A, 50 a 60 Hz 200 a 240 VAC: 5 A, 50 Hz a 60 Hz (Válido apenas na Coreia)				100 a 240 VAC: 10 – 5A, 50 – 60Hz 200 a 240 VAC:5A 50Hz-60Hz (Válido apenas na Coreia)				100 a 240 VAC: 12 – 5A, 50 – 60Hz 200 a 240 VAC:6A 50Hz - 60Hz (Válido apenas na Coreia)			
Saída CC	+3.3V	+5V	+12V	+5VSB	+3.3V	+5V	+12V	+5VSB	+3.3V	+5V	+12V	+5VSB
Carga máxima	20A	20A	62.5A	3A	20A	20A	70.8A	3A	20A	20A	83.3A	3A
Potência máx. de saíde	120W		750W	15W	120W		850W	15W	120W		1000W	15W
Potência total	750W				850W				1000W			
EFICIÊNCIA ENERGÉTICA	Classificação 80 PLUS: Gold Carga de 20%: 91,63% a 115 V Carga de 50%: 92,11% a 115 V Carga de 100%: 89,53% a 115 V				Classificação 80 PLUS: Gold Carga de 20%: 91,58% a 115 V Carga de 50%: 92,1% a 115 V Carga de 100%: 89,33% a 115 V				Classificação 80 PLUS: Gold Carga de 20%: 92,22% a 115V Carga de 50%: 92,18% a 115V Carga de 100%: 89,1% a 115V			
Temperatura	0 – 50°C (carga contínua completa)											
Regulamentação e certificação	CE, UKCA, FCC, IC, BSMI, CB (IEC 62368-1 Ed. 3) , RCM, KC											
Correção PF	Ativa a 0,99											
Proteções	OVP (Proteção contra sobretensão), UVP (Proteção contra baixa tensão), SCP (Proteção contra curto-circuito), OTP (Proteção contra sobreaquecimento), OPP (Proteção contra sobre energia), OCP (Proteção contra sobre-corrente)											

03. SPECIFICATIONS

ESPECIFICACIONES
SPÉCIFICATIONS
TECHNISCHE DATEN
SPECIFICHE
ESPECIFICAÇÕES

사양
仕様
规格
規格

COMPRIMENTO DO CABO E QUANTIDADE DE CONETORES	> Cabo de alimentação ATX de 24 pinos: 600 mm (1) > Cabo de alimentação de CPU de 4+4 pinos: 700 mm (1) > Cabo de alimentação de CPU de 8 pinos: 700 mm (1) > Cabo de alimentação PCIe de 6+2 pinos: 650 mm (C750: 2 / C850 & C1000: 3) > Cabo de alimentação PCIe de 12 V-2x6 e 16 pinos (12+4): 650 mm (1) > Cabos SATA: 500 + 100 mm (8) > Cabo de periféricos: 500 + 100 mm (3)
ESPECIFICAÇÕES DO VENTILADOR	
Tamanho	135 mm
Tipo	PWM
Velocidade	2300 ± 10% RPM
Fluxo de ar	103,36 CFM
Nível de ruído	40,5 dBA
Rolamento	Rolamento de fluido dinâmico
FUNCIONAMENTO	
MTBF (Tempo médio entre falhas)	100 000 horas
GARANTIA	7 anos

03. SPECIFICATIONS

ESPECIFICACIONES
SPÉCIFICATIONS
TECHNISCHE DATEN
SPECIFICHE
ESPECIFICAÇÕES

사양
仕様
规格
規格

	C750				C850				C1000			
크기	150 x 86 x 150 mm											
일반												
폼 팩터	ATX											
ATX 버전	3.1											
80 PLUS 등급	Gold											
모듈형	완전 모듈형											
커패시터	105°C 고성능 커패시터											
케이블 유형	케이블 콤이 적용된 개별 엠보싱 케이블											
제로 RPM 팬 모드	유											
AC 입력 정격	100 – 240 Vac: 10 – 5 A, 50 – 60 Hz 200 – 240 Vac: 5A 50Hz-60Hz (대한민국 전용)				100 a 240 VAC: 10-5A, 50-60Hz 200 a 240 VAC: 5A 50Hz-60Hz(대한민국 전용)				100 a 240 VAC: 12-5A, 50-60Hz 200 a 240 VAC: 6A 50Hz-60Hz(대한민국 전용)			
DC 출력	+3.3V	+5V	+12V	+5VSB	+3.3V	+5V	+12V	+5VSB	+3.3V	+5V	+12V	+5VSB
최대부하	20A	20A	62.5A	3A	20A	20A	70.8A	3A	20A	20A	83.3A	3A
최대출력전력	120W		750W	15W	120W		850W	15W	120W		1000W	15W
총전력	750W				850W				1000W			
온도	0-50° C(지속적인 최대 부하)											
에너지 효율	80 PLUS 등급 : Gold 20% 부하 : 115V 에서 91.63% 50% 부하 : 115V 에서 92.11% 100% 부하 : 115V 에서 89.53%				80 PLUS 등급 : Gold 20% 부하 : 115V 에서 91.58% 50% 부하 : 115V 에서 92.1% 100% 부하 : 115V 에서 89.33%				80 PLUS 등급 : Gold 20% 부하 : 115V 에서 92.22% 50% 부하 : 115V 에서 92.18% 100% 부하 : 115V 에서 89.1%			
규제 및 인증	CE, UKCA, FCC, IC, BSMI, CB (IEC 62368-1 Ed. 3) , RCM, KC											
역률 보정	0.99 에서 능동 방식											
보호 기능	OVP(과전압 보호), UVP(저전압 보호), SCP(단락 보호), OTP(과열 보호), OPP(과전력 보호), OCP(과전류 보호)											

03. SPECIFICATIONS

ESPECIFICACIONES
SPÉCIFICATIONS
TECHNISCHE DATEN
SPECIFICHE
ESPECIFICAÇÕES

사양
仕様
规格
規格

케이블 길이 및 커넥터 수량	> 24 핀 ATX 전원 케이블 : 600 mm (1 개) > 4+4 핀 CPU 전원 케이블 : 700 mm (1 개) > 8 핀 CPU 전원 케이블 : 700 mm (1 개) > 6+2 핀 PCIe 전원 케이블 : 650 mm (C750: 2 개 / C850 & C1000: 3 개) > 16 핀 (12+4) 12V-2x6 PCIe 전원 케이블 : 650 mm (1 개) > SATA 케이블 : 500 + 100 mm (8 개) > 주변 기기 케이블 : 500 + 100 mm (3 개)
팬 사양	
크기	135 mm
유형	PWM
속도	2,300 ± 10% RPM
풍량	103.36 CFM
소음 수준	40.5 dBA
베어링	유체 동적 베어링
작동	
평균 무고장 시간 (MTBF)	100,000 시간
보증 기간	7 년

03. SPECIFICATIONS

ESPECIFICACIONES
SPÉCIFICATIONS
TECHNISCHE DATEN
SPECIFICHE
ESPECIFICAÇÕES

사양
仕様
规格
規格

	C750				C850				C1000			
寸法	150 x 86 x 150 mm											
全般												
ATX バージョン	ATX											
80 PLUS 規格	3.1											
モジュラー	Gold											
コンデンサー	フルモジュラー式											
ケーブルタイプ	105° C パフォーマンス コンデンサー											
0 RPM ファンモード	個別エンボス加工 ケーブルコーム付き											
ゼロ RPM ファンモード	あり											
AC 入力の定格	100 – 240 Vac: 10 ～ 5A、50 ～ 60Hz 200 – 240 Vac: 5A 50Hz ～ 60Hz（韓国のみ）				100 a 240 VAC: 10 ～ 5 A, 50 ～ 60 Hz 200 a 240 VAC: 5A 50Hz ～ 60Hz （韓国のみ）				100 a 240 VAC: 12 – 5 A, 50 – 60 Hz 200 a 240 VAC: 6A 50Hz-60Hz（韓国のみ）			
DC 出力	+3.3V	+5V	+12V	+5VSB	+3.3V	+5V	+12V	+5VSB	+3.3V	+5V	+12V	+5VSB
最大負荷	20A	20A	62.5A	3A	20A	20A	70.8A	3A	20A	20A	83.3A	3A
最大出力電力	120W		750W	15W	120W		850W	15W	120W		1000W	15W
総電力	750W				850W				1000W			
温度	0 – 50° C (連続全負荷)											
エネルギー効率	80 PLUS 등급 : Gold 20% 負荷 : 91.63% @ 115 V 50% 負荷 : 92.11% @ 115 V 100% 負荷 : 89.53% @ 115 V				80 PLUS 등급 : Gold 20% 負荷 : 91.58% @ 115 V 50% 負荷 : 92.1% @ 115 V 100% 負荷 : 89.33% @ 115 V				80 PLUS 등급 : Gold 20% 負荷 : 92.22% @ 115 V 50% 負荷 : 92.18% @ 115 V 100% 負荷 : 89.1% @ 115 V			
規制および認証	CE、UKCA、FCC、IC、BSMI、CB（IEC 62368-1 Ed. 3）、RCM、KC											
力率補正	アクティブ @ 0.99											
保護	OVP（過電圧保護）、UVP (不足電圧保護)、SCP (ショート保護)、OTP（過熱保護）、OPP（過電力保護）、OCP（過電流保護）											

03. SPECIFICATIONS

ESPECIFICACIONES
SPÉCIFICATIONS
TECHNISCHE DATEN
SPECIFICHE
ESPECIFICAÇÕES

사양
仕様
规格
規格

ケーブルの長さ、およびコネクタの数	> 24 ピン ATX 電源ケーブル : 600 mm (1) > 4+4 ピン CPU 電源ケーブル : 700 mm (1) > 8 ピン CPU 電源ケーブル : 700 mm (1) > 6+2 ピン PCIe 電源ケーブル : 650 mm (C750: 2 / C850 & C1000: 3) > 16 ピン（12+4）12V-2x6 PCIe 電源ケーブル : 650 mm (1) > SATA ケーブル : 500 + 100 mm (8) > 周辺機器ケーブル : 500 + 100 mm (3)
ファン仕様	
サイズ	135 mm
タイプ	PWM
速度	2,300 ± 10% RPM
エアフロー	103.36 CFM
ノイズレベル	40.5 dBA
軸受	流体動圧軸受
動作	
平均故障間隔	100,000 時間
保証	7 年

03. SPECIFICATIONS

ESPECIFICACIONES
SPÉCIFICATIONS
TECHNISCHE DATEN
SPECIFICHE
ESPECIFICAÇÕES

사양
仕様
规格
規格

	C750				C850				C1000			
尺寸	150 x 86 x 150 mm											
通用												
规格	ATX											
ATX 版本	3.1											
80 PLUS 认证级别	金牌											
模组	全模组											
电容器	105°C 高性能电容器											
线材类型	独立压纹 · 配线材梳											
零转速风扇模式	支持											
交流输入额定值	100 – 240 Vac: 10 – 5 A, 50 – 60 Hz 200 – 240 Vac: 5A 50Hz-60Hz (仅限韩国)				100 – 240 Vac: 10 – 5 A, 50 – 60 Hz 200 – 240 Vac: 5A 50Hz-60Hz (仅限韩国)				100 – 240 Vac: 12 – 5 A, 50 – 60 Hz 200 – 240 Vac: 6A 50Hz-60Hz (仅限韩国)			
直流输出额定值	+3.3V	+5V	+12V	+5VSB	+3.3V	+5V	+12V	+5VSB	+3.3V	+5V	+12V	+5VSB
最大负载	20A	20A	62.5A	3A	20A	20A	70.8A	3A	20A	20A	83.3A	3A
最大输出功率	120W		750W	15W	120W		850W	15W	120W		1000W	15W
総電力	750W				850W				1000W			
温度	0 – 50° C (连续满负载)											
能源效率	80 PLUS 认证级别 : 金牌 20% 负载 : 91.63% @ 115 V 50% 负载 : 92.11% @ 115 V 100% 负载 : 89.53% @ 115 V				80 PLUS 认证级别 : 金牌 20% 负载 : 91.58% @ 115 V 50% 负载 : 92.1% @ 115 V 100% 负载 : 89.33% @ 115 V				80 PLUS 认证级别 : 金牌 20% 负载 : 92.22% @ 115 V 50% 负载 : 92.18% @ 115 V 100% 负载 : 89.1% @ 115 V			
法规标准 & 认证	CE, UKCA, FCC, IC, BSMI, CB (IEC 62368-1 Ed. 3) , RCM, KC											
功率因数校正	主动 @ 0.99											
保护功能	OVP (过压保护) 、UVP 欠压保护) 、SCP (短路保护) 、OTP (过温保护) 、OPP (过功率保护) 、OCP (过流保护)											

03. SPECIFICATIONS

ESPECIFICACIONES
SPÉCIFICATIONS
TECHNISCHE DATEN
SPECIFICHE
ESPECIFICAÇÕES

사양
仕様
规格
規格

线材长度 & 接口数量	> 24-pin ATX 电源线 : 600 mm (1) > 4+4-pin CPU 电源线 : 700 mm (1) > 8-pin CPU 电源线 : 700 mm (1) > 6+2-pin PCIe 电源线 : 650 mm (C750: 2 / C850 & C1000: 3) > 16-pin (12+4) 12V-2x6 PCIe 电源线 : 650 mm (1) > SATA 线 : 500 + 100 mm (8) > 外部设备线 : 500 + 100 mm (3)
风扇规格	
尺寸	135 mm
类型	PWM
转速	2,300 ± 10% RPM
风量	103.36 CFM
噪音等级	40.5 dBA
轴承	流体动压轴承
运行参数	
平均故障间隔时间 (MTBF)	100,000 小时
保修期	7 年

03. SPECIFICATIONS

ESPECIFICACIONES
SPÉCIFICATIONS
TECHNISCHE DATEN
SPECIFICHE
ESPECIFICAÇÕES

사양
仕様
规格
規格

	C750				C850				C1000			
尺寸	150 x 86 x 150 mm											
一般規格												
規格尺寸	ATX											
ATX 版本	3.1											
80 PLUS 認證	金牌											
模組化	全模組化											
電容	105°C 高效能電容											
線材類型	個別壓紋附理線梳											
零轉速風扇模式	有											
AC 輸入規格	100 – 240 Vac: 10 – 5 A, 50 – 60 Hz 200 – 240 Vac: 5A 50Hz-60Hz (僅限南韓)				100 – 240 Vac: 10 – 5 A, 50 – 60 Hz 200 – 240 Vac: 5A 50Hz-60Hz (僅限南韓)				100 – 240 Vac: 12 – 5 A, 50 – 60 Hz 200 – 240 Vac: 6A 50Hz-60Hz (僅限南韓)			
DC 輸出	+3.3V	+5V	+12V	+5VSB	+3.3V	+5V	+12V	+5VSB	+3.3V	+5V	+12V	+5VSB
最大負載	20A	20A	62.5A	3A	20A	20A	70.8A	3A	20A	20A	83.3A	3A
最大輸出功率	120W		750W	15W	120W		850W	15W	120W		1000W	15W
總功率	750W				850W				1000W			
能源效率	80 PLUS 認證 : 金牌 20% 負載 : 91.63% @ 115 V 50% 負載 : 92.11% @ 115 V 100% 負載 : 89.53% @ 115 V				80 PLUS 認證 : 金牌 20% 負載 : 81.58% @ 115 V 50% 負載 : 92.1% @ 115 V 100% 負載 : 89.33% @ 115 V				80 PLUS 認證 : 金牌 20% 負載 : 92.22% @ 115 V 50% 負載 : 92.18% @ 115 V 100% 負載 : 89.1% @ 115 V			
溫度	0 – 50° C (持續滿載)											
安規與認證	CE、UKCA、FCC、IC、BSMI、CB (IEC 62368-1 Ed. 3)、RCM、KC											
功率因數校正	主動式 @ 0.99											
保護機制	OVP (過電壓保護)、UVP (低電壓保護)、SCP (短路保護)、OTP (過溫度保護)、OPP (過載保護)、OCP (過電流保護)											

03. SPECIFICATIONS

ESPECIFICACIONES
SPÉCIFICATIONS
TECHNISCHE DATEN
SPECIFICHE
ESPECIFICAÇÕES
사양
仕様
规格
規格

線材長度與接頭數量	> 24-pin ATX 電源線 : 600 mm (1) > 4+4-pin CPU 電源線 : 700 mm (1) > 8-pin CPU 電源線 : 700 mm (1) > 6+2-pin PCIe 電源線 : 650 mm (C750: 2 / C850 & C1000: 3) > 16-pin (12+4) 12V-2x6 PCIe 電源線 : 650 mm (1) > SATA 線 : 500 + 100 mm (8) > 周邊設備線材 : 500 + 100 mm (3)
風扇規格	
尺寸	135 mm
類型	PWM
轉速	2,300 ± 10% RPM
風量	103.36 CFM
噪音等級	40.5 dBA
軸承	液態動態軸承
運作	
平均故障間隔	100,000 小時
保固	7 年

04. NZXT GLOBAL WARRANTY POLICY

This NZXT Global Warranty Policy governs the sale of products by NZXT to you.

I. WARRANTY LENGTH

New NZXT Product	Warranty Length
C SERIES Gold Core	7 Years

Any replacement product will be covered under warranty for the remainder of the warranty period or thirty days, whichever is longer. Proof of purchase is required for warranty service.

II. WHO IS PROTECTED

The Warranty covers only NZXT products purchased by the original consumer.

III. WHAT IS AND IS NOT COVERED

Please note that our warranty is not an unconditional guarantee. If the product, in NZXT's reasonable opinion, malfunctions within the warranty period, NZXT will provide you at its sole discretion with a repaired or replacement product, either new or refurbished, with a similar function that is equal or greater in value depending on supply. Our warranty does not cover the following:

- any product or serial number/warranty sticker modification applied without permission from NZXT;
- any damage that is not a manufacturing defect;
- damage, deterioration or malfunction resulting from: accident, abuse, misuse, neglect, fire, water, lightning, or other acts of nature, unauthorized product modification or failure to follow instructions included with the product;
- improper installation, unauthorized alterations or modifications, or repair or attempted repair by anyone not authorized by NZXT;
- shipping or transport damage (claims must be made with the carrier);
- normal wear and tear.

NZXT does not warrant that this product will meet your requirements. It is your responsibility to determine the suitability of this product for your purpose. For NZXT Store orders, we cover two way return shipping for all exchanges and returns. For all other authorized dealers, NZXT Support does not cover return shipping and only covers one way shipping from NZXT back to the end user for exchanges. Two way expedited shipping is provided for all PSUs covered under the Less Than Three program, indiscriminate of purchase location, provided the location is an approved NZXT reseller.

IV. EXCLUSION OF DAMAGES (DISCLAIMER)

NZXT's sole obligation and liability under this warranty is limited to the repair or replacement of a defective product with either a new or refurbished product with a similar function that is equal or greater in value at our option. NZXT shall not, in any event, be liable for any incidental or consequential damage, including but not limited to damages resulting from interruption of service and loss of data, business, or for liability in tort relating to this product or resulting from its use or possession.

V. LIMITATIONS OF IMPLIED WARRANTIES

There are no other warranties, expressed or implied, including but not limited to those of merchantability or fitness for a particular purpose. The duration of implied warranties is limited to the warranty length specified in Paragraph I.

VI. TO OBTAIN TECHNICAL SUPPORT

If you have already referenced your product owner's manual and still need help, you may contact us by phone at +1 (800) 228-9395, by email at service@nzxt.com, or visit the NZXT Support site at nzxt.com/customer-support.

VII. HOW TO OBTAIN A WARRANTY SERVICE FROM NZXT

To receive a warranty service for your product when purchased directly from NZXT, you must submit a request via the NZXT Support site outlining the problem. If a technician deems the product defective or requiring testing, you will be required to provide a copy of your proof of purchase, which will enable you to submit a Return Merchandise Authorization "RMA" request.

Once approved, you`ll receive an RMA number, upon which you will be asked to ship the defective item back to NZXT with the RMA number clearly marked or labelled on the package. NZXT recommends that appropriate measures are taken to safeguard the product from damage during shipping.

VIII. APPLICABLE LAW AND ADDITIONAL LEGAL RIGHTS FOR CONSUMERS

This warranty gives you specific legal rights. These conditions are governed and construed in accordance with the laws of California (with exception of its conflict of law provisions), and the application of the United Nations Convention of Contracts for the International Sale of Goods is expressly excluded. The non-exclusive jurisdiction of the courts of California is agreed, which means that you may bring a claim to enforce your consumer protection rights in connection with this Global Warranty in the country which you have your habitual residence where you may have additional rights. These rights may vary.

For original consumers who are covered by consumer protection laws or regulations in their country, state, or province of purchase or, if different, their country, state, or province of residence, the benefits conferred by this warranty are in addition to all rights and remedies conveyed by such consumer protection laws and regulations. To the extent that liability under such consumer laws can be limited, NZXT's liability is limited, and its sole option, to repair or replacement, either new or refurbished, with a similar function that is equal or greater in value depending on supply.

In the United Kingdom:

- For NZXT products sold to customers in the UK, during the expected lifespan of your product your legal rights entitle you to the following:
  - > Up to 30 days: if your goods are faulty, then you can get an immediate refund.
  - > Up to six months: if your goods can't be repaired or replaced, then you're entitled to a full refund, in most cases.
  - > Up to six years: if your goods do not last a reasonable length of time you may be entitled to some money back.
- If the person seeking to rely on the guarantee is not the original consumer, the NZXT Warranty will cover the product in relation to that person provided that they are able to provide proof of the transfer of the benefit of the guarantee from the original consumer.
- The implied warranties under the Consumer Rights Act 2015 says that your goods must be as described, fit for all purposes for which such goods are usually supplied, and of satisfactory quality.

In the EU:

- If you are a consumer and have your habitual residence in the EU, you additionally enjoy the protection afforded to you by provisions that cannot be derogated from by agreement by virtue of the law where you have your habitual residence.

IX. WARRANTY SERVICE FROM RESELLERS

In the event that a warranty service is sought, you must provide proof of purchase (store receipt or invoice) in order to receive the service and if deemed necessary, repair or replacement product.

In North America:

Within the first 60 days after purchase, please return your product (or for power supplies installed within our enclosures, just the failed power supply) to your dealer or reseller for a replacement. If the product is still within warranty and you can no longer return it to your dealer, please contact NZXT Customer Support (see above) for assistance and instructions. NZXT will not accept returns without prior approval and an RMA number.

In Europe:

Within the first year after purchase, please return your product (or for power supplies installed within our enclosures, just the failed power supply) to your dealer or reseller for a replacement. If the product is still within warranty and you can no longer return it to your dealer, please contact NZXT Customer Support (see above) for assistance and instructions. NZXT will not accept returns without prior approval.

In Australasia:

Within the first two years after purchase, please return your product (or for power supplies installed within our enclosures, just the failed power supply) to your dealer or reseller for a replacement. If the product is still within warranty and you can no longer return it to your dealer, please contact NZXT Customer Support (see above) for assistance and instructions. NZXT will not accept returns without prior approval.

The cost of shipping will be borne at the first instance by you; however, if the purchased item is defective, NZXT will reimburse reasonable postage or transportation of costs.

Outside North America, Europe, and Australasia:

If your product needs to be returned within the warranty period, please contact the retailer or distributor from whom you purchased the product.

X. NZXT.COM STORE RETURNS/EXCHANGE POLICY

Eligible products under this NZXT Warranty qualify for a full refund or exchange only with an authorized RMA number and if the item is returned to the NZXT.com store inventory within 30 days of purchase. Returns are not allowed beyond 30 days of the purchase date. The NZXT.com Store reserves the right to deny any return or exchange. Refunds will be credited to the original method of payment. To initiate a return, simply submit a request via NZXT support site.

> Visit nzxt.com/warranty and support.nzxt.com for information on warranty coverage and service.
> Visite el sitio Web nzxt.com/warranty y support.nzxt.com para obtener información sobre la cobertura y el servicio de la garantía.
> Visitez nzxt.com/warranty et support.nzxt.com pour les informations de la couverture de la garantie et du service.
> Informationen zu Geltungsbereich und Service der Garantie finden Sie unter support.nzxt.com und nzxt.com/warranty.
> Visitare il sito nzxt.com/warranty e support.nzxt.com per informazioni sulla copertura e sul servizio della garanzia.
> Visite nzxt.com/warranty e support.nzxt.com para obter informações sobre a cobertura da garantia e assistência.
> 제품 보증 범위와 서비스 정보를 확인하시려면 nzxt.com/warranty 또는 support.nzxt.com 을 방문해 주시기 바랍니다.
> 保証範囲およびサービスに関する情報については、support.nzxt.com と nzxt.com/warranty にアクセスしてください。
> 请造访 nzxt.com/warranty 和 support.nzxt.com 了解保修范围和服务的信息。
> 請訪問 nzxt.com/warranty 和 support.nzxt.com 了解產品保固範圍和更多服務訊息。

NZXT, Inc. | 605 E Huntington Drive, Suite 213, Monrovia, CA 91016 USA
NZXT Europe GmbH | Messe München, Kronstadter Str. 4, Munich, 81677

+1 (800) 228-9395 / service@nzxt.com / nzxt.com

05. REGULATORY STATEMENT

Points de collecte sur www.quefairedemesdechets.fr

UKCA DECLARATION OF CONFORMITY

The object of the declaration described above is in conformity with the relevant UK harmonization legislation:

- Electromagnetic Compatibility Regulations 2016
- Electrical Equipment (Safety) Regulations 2016
- The Restriction of the Use of Certain Hazardous Substances in Electrical and Electronic EquipmentRegulations 2012

ROHS STATEMENT

This product is compliant to implemented RoHS (Restriction of Hazardous Substances) type regulations worldwide, including but not limited to China, India, Japan, Korea and European Union.

REACH STATEMENT

EU REACH SVHC Disclosure on Candidate List

REACH (Registration, Evaluation, Authorization and Restriction of Chemicals, EC 1907/2006) is the European Union's (EU) chemical substances regulatory framework. REACH requires NZXT Inc. to provide customers with sufficient information on Substances of Very High Concern (SVHC) contained in products in concentration above 0.1% weight by weight (w/w) to allow safe use of the product.

DECLARATION OF CONFORMITY

The device complies with the requirements set out in the Council Directives relevant Union harmonisation legislation:

- EMC Directive 2014/30/EU
- RoHS Directive 2011/65/EU & (EU) 2015/863
- LVD Directive 2014/35/EU

DÉCLARATION DE CONFORMITÉ

L'appareil est conforme aux exigences définies dans les directives du Conseil relatives à la législation d'harmonisation de l'Union :

- Directive EMC 2014/30/UE
- Directive RoHS 2011/65/UE et (UE) 2015/863
- Directive LVD 2014/35/UE

DECLARACIÓN DE CONFORMIDAD

El dispositivo cumple los requisitos impuestos en las directivas del Consejo relativas a la legislación de armonización de la Unión Europea:

- Directiva sobre compatibilidad electromagnética 2014/30/UE
- Directiva sobre sustancias peligrosas 2011/65/UE y (UE) 2015/863
- Directiva sobre baja tensión 2014/35/UE

DECLARAÇÃO DE CONFORMIDADE

O dispositivo está conforme aos requisitos das Diretivas do Conselho e relevante legislação de harmonização da União Europeia:

- Diretiva EMC 2014/30/UE
- Diretiva LVD 2014/35/UE
- Diretiva RoHS 2011/65/UE & (UE) 2015/863

DICHIARAZIONE DI CONFORMITÀ

Il dispositivo è conforme con i requisiti definiti nelle Direttive del Consiglio relative alla Norma sull'armonizzazione dell'Unione:

- Direttiva EMC 2014/30/UE
- Direttiva RoHS 2011/65/UE e (UE) 2015/863
- Direttiva LVD 2014/35/UE

KONFORMITÄTSERKLÄRUNG

Das Gerät entspricht den Anforderungen der entsprechenden EU-Harmonisierungsrichtlinien des Rates:

- EMV-Richtlinie 2014/30/EU
- RoHS-Richtlinie 2011/65/EU & (EU) 2015/863
- LVD-Richtlinie 2014/35/EU

ЗАЯВЛЕНИЕ О СООТВЕТСТВИИ

Это устройство отвечает требованиям, изложенным в Директивах Совета о гармонизации соответствующих законов государств, входящих в состав Европейского союза (EU):

- Директива 2014/30/EU об электромагнитной совместимости
- Директива 2014/35/EU о низковольтном оборудовании
- Директива 2011/65/EU и (EU) 2015/863 об ограничении использования определенных видов опасных веществ в электрическом и электронном оборудовании (RoHS)

OŚWIADCZENIE ZGODNOŚCI

Urządzenie jest zgodne z wymaganiami określonymi w odpowiednich unijnych Dyrektywach harmonizacyjnych Rady:

- Dyrektywa EMC 2014/30/UE
- Dyrektywa RoHS 2011/65/UE i (UE) 2015/863
- Dyrektywa 2014/35/EU

UYUM BEYANI

Aygıt, Konsey Yönergeleri ile ilgili Birlik uyum mevzuatında belirtilen şartlara uygundur:

- EMC Yönergesi 2014/30/EU
- LVD Yönergesi 2014/35/EU
- RoHS Yönergesi 2011/65/EU & (EU) 2015/863

OVERENSSTEMMELSESERKLÆRING

Enheden er i overensstemmelse med kravene i Rådets direktiv, relevant til EU's lovgivning om harmonisering:

- EMC-direktiv 2014/30/EU
- LVD-direktiv 2014/35/EU
- RoHS-direktiv 2011/65/EU og (EU) 2015/863

VAATIMUSTENMUKAISUUSVAKUUTUS

Laite on Euroopan neuvoston direktiivien olennaisen unionin harmonisointilainsäädännön vaatimusten mukainen:

- EMC-direktiivi 2014/30/EU
- LVD-direktiivi 2014/35/EU
- RoHS-direktiivi 2011/65/EU & (EU) 2015/863

SAMSVARSERKLÆRING

Enheten overholder kravene i EU-rådets harmoniseringsdirektiver:

- EMC-direktiv 2014/30/EU
- LVD-direktiv 2014/35/EU
- RoHS-direktiv 2011/65/EU & (EU) 2015/863

KONFORMITETSDEKLARATION

Enheten uppfyller kraven som anges i Rådets direktivs relevanta harmoniseringslagstiftning för Europeiska unionen:

- EMC-direktivet 2014/30/EU
- LVD-direktiv 2014/35/EU
- RoHS-direktiv 2011/65/EU & (EU) 2015/863

DECLARAȚIE DE CONFORMITATE

Dispozitivul respectă cerințele menționate în Directivele Consiliului și în legislația armonizată relevantă la nivelul Uniunii:

- Directiva privind compatibilitatea electromagnetică 2014/30/UE
- Directiva privind tensiunea joasă 2014/35/UE
- Directiva RoHS 2011/65/UE și (UE) 2015/863

PROHLÁŠENÍ O SHODĚ

Zařízení odpovídá požadavkům stanoveným ve směrnicích Rady podle příslušných harmonizačních právních předpisů Unie:

- Směrnice o elektromagnetické kompatibilitě 2014/30/EU
- Směrnice o elektrických zařízeních nízkého napětí 2014/35/EU
- Směrnice o RoHS 2011/65/EU a (EU) 2015/863

VERKLARING VAN OVEREENSTEMMING

Het apparaat voldoet aan de vereisten van de relevante richtlijnen van de Raad met betrekking tot harmonisatiewetgeving in de Unie:

- EMC-richtlijn 2014/30/EU
- RoHS-richtlijn 2011/65/EU & (EU) 2015/863
- LVD-direktivet 2014/35/EU

MEGFELELŐSÉGI NYILATKOZAT

Az eszköz megfelelő a Tanács irányelvek releváns uniós harmonizálási rendelkezései által felállított követelményeknek:

- 2014/30/EU EMC-irányelv
- 2014/35/EU LVD-irányelv
- 2011/65/EU és (EU) 2015/863 RoHS-irányelv

ДЕКЛАРАЦИЯ ЗА СЪОТВЕТСТВИЕ

Устройството отговаря на изискванията на уместното законодателство на Съюза за хармонизация на директивите на Съвета:

- EMC директива 2014/30/EC
- LVD директива 2014/35/EC
- RoHS директива 2011/65/EC & (EC) 2015/863

DEKLARACIJA O USKLAĐENOSTI

Ovaj uređaj sukladan je s odredbama postavljenim u direktivama Vijeća vezanim uz relevantne harmonizacijske zakone Unije:

- EMC Direktiva 2014/30/EU
- LVD Direktiva 2014/35/EU
- RoHS Direktiva 2011/65/EU & (EU) 2015/863

ΔΗΛΩΣΗ ΣΥΜΜΟΡΦΩΣΗΣ

Η συσκευή συμμορφώνεται με τις απαιτήσεις που καθορίζονται στις Οδηγίες του Ευρωπαϊκού Συμβουλίου και σχετίζονται με τη νομοθεσία περί εναρμόνισης της Ένωσης:

- Οδηγία περί ΗΜΣ 2014/30/ΕΕ
- Οδηγία περί LVD 2014/35/ΕΕ
- Οδηγία περί RoHS 2011/65/ΕΕ &(ΕΕ) 2015/863

To protect the global environment and as an environmentalist, NZXT must remind you that:

Under the European Union ("EU") Directive on Waste Electrical and Electronic Equipment, Directive 2002/96/EC, which takes effect on August 13, 2005, products of "electrical and electronic equipment" cannot be discarded as municipal waste anymore and manufacturers of covered electronic equipment will be obligated to take back such products at the end of their useful life. NZXT will comply with the product take back requirements at the end of life of NZXT-branded products that are sold into the EU. You can return these products to local collection points.

NZXT como empresa comprometida con la protección del medio ambiente, recomienda:

Bajo la directiva 2012/19/EU de la Unión Europea en materia de desechos y/o equipos electrónicos, con fecha de rigor desde el 14 de febrero de 2014, los productos clasificados como “eléctricos y equipos electrónicos” no pueden ser depositados en los contenedores habituales de su municipio, los fabricantes de equipos electrónicos, están obligados a hacerse cargo de dichos productos al termino de su período de vida. NZXT estará comprometido con los términos de recogida de sus productos vendidos en la Unión Europea al final de su periodo de vida. Usted debe depositar estos productos en el punto limpio establecido por el ayuntamiento de su localidad o entregar a una empresa autorizada para la recogida de estos residuos.

En tant qu'écologiste et afin de protéger l'environnement, NZXT tient à rappeler ceci:

Au sujet de la directive européenne (EU) relative aux déchets des équipement électriques et électroniques, directive 2002/96/EC, prenant effet le 13 août 2005, que les produits électriques et électroniques ne peuvent être déposés dans les décharges ou tout simple-ment mis à la poubelle. Les fabricants de ces équipements seront obligés de récupérer certains produits en fin de vie. NZXT prendra en compte cette exigence relative au retour des produits en fin de vie au sein de la communauté européenne. Par conséquent vous pouvez retourner localement ces matériels dans les points de collecte.

Hinweis von NZXT zur Erhaltung und Schutz unserer Umwelt

Gemäß der Richtlinie 2012/19/EU über Elektro- und Elektronik-Altgeräte dürfen Elektro- und Elektronik-Altgeräte nicht mehr als kommunale Abfälle entsorgt werden. NZXT hat europaweit verschiedene Sammelund Recyclingunternehmen beauftragt, die in die Europäische Union in Verkehr gebrachten Produkte, am Ende seines Lebenszyklus zurückzunehmen. Bitte entsorgen Sie dieses Produkt zum gegebenen Zeitpunkt ausschliesslich an einer lokalen Altgerätesammelstelle in Ihrer Nähe.

FCC, ISED Statement

This device complies with Part 15 of the FCC Rules. Operation is subject to the following two conditions:
(1) This device may not cause harmful interference, and (2) this device must accept any interference received, including interference that may cause undesired operation. CAN ICES-003(B) / NMB-003(B)

L'éco-participation finance la réparation.
Notre partenaire Ecologic propose le Bonus Réparation pour les produits Electroniques.
Reparation Fund
Retrouvez les réparateurs labellisés et le montant des réductions du Bonus Réparation dans le cadre du fonds réparation.
The eco-participation finances the repair.
Our partner Ecologic offers the Repair Bonus for Electronics.
Reparation Fund
Find the certified repairers and the amount of the Repair Bonus reductions within the framework of the repair fund.

IMPORTANT SAFETY INFORMATION
CAUTION ELECTRIC SHOCK HAZARD!

1. Install in accordance with all manufacturer instructions and safety warnings.
   Failure to do so may result in damage to your power supply or system, and may causes serious injury or death.
2. High voltages are present in the power supply.
   Do not open the power supply case or attempt to repair the power supply; there are no user-serviceable components.
3. This product is designed for indoor use only.
4. Do not use the power supply near water, or in high temperature or high humidity environments.
5. Do not install near any heat sources such as radiators, heat registers, stoves, or other apparatus that produce heat.
6. Do not insert any objects into the open ventilation or fan grill area of the power supply.
7. Do not modify the cables and/or connectors included with this power supply.
8. If this power supply uses modular cables, use only manufacturer supplied cables.
9. The 24-pin main power connector has a detachable 4-pin connector.
   This 4-pin connector is not a P4 or ATX 12V connector.
   Do not force this cable in the P4 or ATX +12V socket on motherboard.
10. Failure to comply with any manufacturer instructions and/or any of these safety instructions will immediately void all warranties and guarantees.

INFORMACIÓN IMPORTANTE SOBRE SEGURIDAD
¡PELIGRO DE DESCARGA ELÉCTRICA!

1. Siga todas las advertencias de seguridad e instrucciones del fabricante durante la instalación.
   De lo contrario, podría dañar el sistema o la fuente de alimentación, y provocar lesiones graves o la muerte.
2. En la fuente de alimentación existen tensiones elevadas.
   No abra la caja de la fuente de alimentación ni intente repararla, no contiene piezas que el usuario pueda reparar.
3. Este producto está diseñado para su uso en interiores.
4. No utilice la fuente de alimentación cerca de agua ni en entornos muy húmedos o con temperaturas altas.
5. No instale la unidad cerca de fuentes de calor tales como radiadores, medidores de temperatura, estufas u otros aparatos que produzcan calor.
6. No introduzca ningún objeto en el área del ventilador o ventilación abierta de la fuente de alimentación.
7. No modifique los cables y/o conectores incluidos con esta fuente de alimentación.
8. Si esta fuente de alimentación utiliza cables modulares, utilice solo cables proporcionados por el fabricante.
9. El conector de alimentación principal de 24 pines dispone de un conector de 4 pines extraíble.
   Este conector de 4 pines no es un conector P4 o ATX de 12 V.
   No fuerce este cable en el enchufe P4 o ATX +12 V de la placa base.
10. El incumplimiento de cualquiera de las instrucciones del fabricante o de estas instrucciones de seguridad anulará de inmediato todas las garantías.

INFORMATIONS IMPORTANTES DE SÉCURITÉ
ATTENTION : RISQUE D'ÉLECTROCUTION!

1. L'installation doit être effectuée conformément aux instructions du fabricant et aux avertissements de sécurité.
   Une installation non conforme peut entraîner des dommages à votre bloc d'alimentation ou système électrique, et entraîner des blessures graves, voire la mort.
2. Le bloc d'alimentation contient des tensions élevées.
   N'ouvrez pas le boîtier du bloc d'alimentation et ne tentez pas de le réparer ; aucun de ses composants n'est réparable.
3. Ce produit est conçu pour une utilisation en intérieur uniquement.
4. N'utilisez pas le bloc d'alimentation à proximité d'eau, à des températures élevées ou dans des environnements très humides.
5. Ne l'installez pas à proximité de sources de chaleur telles que radiateurs, registres, poêles ou autres appareils produisant de la chaleur.
6. N'insérez aucun objet dans l'orifice ou la grille de ventilation du bloc d'alimentation.
7. Ne modifiez pas les câbles et/ou connecteurs inclus avec ce bloc d'alimentation.
8. Si ce bloc d'alimentation utilise des câbles modulaires, utilisez uniquement ceux fournis par le fabricant.
9. Le connecteur d'alimentation principal à 24 broches est équipé d'un connecteur amovible à 4 broches.
   Ce connecteur à 4 broches n'est pas un connecteur P4 ou ATX 12 V.
   Ne forcez pas ce câble dans la prise P4 ou ATX +12 V de la carte-mère.
10. Toute non conformité aux instructions du fabricant et/ou à l'une de ces consignes de sécurité aura pour conséquence l'annulation immédiate des garanties.

WICHTIGE SICHERHEITSINFORMATIONEN
ACHTUNG STROMSCHLAGGEFAHR!

1. Installieren Sie das Gerät gemäß den Anweisungen des Herstellers und den Sicherheitshinweisen.
   Andernfalls kann es zu Schäden an Ihrem Netzteil oder System und zu schweren oder tödlichen Verletzungen kommen.
2. Im Netzteil ist Hochspannung enthalten.
   Sie dürfen das Gehäuse des Netzteils weder öffnen noch zu reparieren versuchen; es beinhaltet keine Komponenten, die vom Benutzer gewartet werden können.
3. Dieses Produkt ist nur für den Gebrauch in Innenräumen vorgesehen.
4. Verwenden Sie das Netzteil nicht in der Nähe von Wasser oder bei hohen Temperaturen oder in Umgebungen mit hoher Luftfeuchtigkeit.
5. Montieren Sie das Gerät nicht neben Hitzequellen wie Heizkörpern, Wärmespeichern, Öfen oder anderen Geräten, die Wärme erzeugen.
6. Stecken Sie keine Gegenstände in die offene Belüftung oder das Lüftergitter des Netzteils.
7. Nehmen Sie keine Modifikationen an den Kabeln und/oder Steckverbindern vor, die im Lieferumfang dieses Netzteils enthalten sind.
8. Falls es sich um ein Netzteil mit modularen Kabeln handelt, dürfen Sie ausschließlich vom Hersteller bereitgestellte Kabel verwenden.
9. Der 24-polige Hauptstromanschluss ist mit einem abnehmbaren 4-poligen Steckverbinder ausgestattet.
   Dieser 4-polige Steckverbinder ist kein P4- oder ATX-12-V-Steckverbinder.
   Stecken Sie diese Kabel nicht mit Gewalt in die P4- oder ATX-12 V-Buchse des Mainboards.
10. Bei Nichteinhaltung der Anweisungen des Herstellers und/oder dieser Sicherheitshinweise erlischt die Gültigkeit von Gewährleistungen und Garantien mit sofortiger Wirkung.

INFORMAZIONI IMPORTANTI SULLA SICUREZZA

AVVERTENZA: PERICOLO DI SCOSSE ELETTRICHE

1. Effettuare l'installazione in conformità a tutte le istruzioni del produttore e gli avvisi sulla sicurezza.
   Il mancato rispetto di questa procedura potrebbe causare danni al proprio alimentatore o sistema e potrebbe provocare lesioni gravi o anche la morte di persone.
2. Nell'alimentatore sono presenti tensioni elevate.
   Non aprire il case o la custodia dell'alimentatore, né tentare di riparare l'alimentatore; non contiene componenti riparabili o sostituibili dall'utente.
3. Il prodotto è stato progettato solo per uso interno.
4. Non usare l'alimentatore nelle vicinanze di acqua, a temperature elevate o in ambienti con umidità elevata.
5. Non installare vicino a fonti di calore quali termosifoni, valvole di regolazione del calore, stufe o altri apparecchi che producono calore.
6. Non inserire oggetti nelle fessure di ventilazione aperte o nella griglia della ventola sull'alimentatore.
7. Non modificare i cavi e/o i connettori in dotazione con questo alimentatore.
8. Se l'alimentatore utilizza cavi modulari, utilizzare solo cavi forniti dal produttore.
9. Il connettore di alimentazione principale a 24 pin è dotato di un connettore a 4 pin estraibile.
   Il connettore a 4 pin non è un connettore di tipo P4 o ATX da 12 V.
   Non forzare l'inserimento del cavo nella presa P4 o ATX a +12 V della scheda madre.
10. La mancata conformità a qualsiasi istruzione del produttore e/o a qualsiasi presente istruzione sulla sicurezza renderà immediatamente nulle tutte le garanzie.

INFORMAÇÕES IMPORTANTES DE SEGURANÇA

CUIDADO, RISCO DE CHOQUE ELÉTRICO!

1. Instale de acordo com todas as instruções do fabricante e com os avisos de segurança.
   Não fazê-lo poderá resultar em danos à fonte de alimentação ou ao sistema, isso pode causar lesões graves ou morte.
2. Há alta tensão na fonte de energia.
   Não abra a caixa da fonte de alimentação ou tente reparar a fonte de alimentação.
   Não há componentes que possam ser reparados pelo usuário.
3. Este produto foi projetado apenas para uso em ambientes internos.
4. Não use a fonte de alimentação perto de água ou em ambientes com alta temperatura ou alto nível de umidade.
5. Não instale perto de fontes de calor como radiadores, saídas de ar quente, fogões ou outros aparelhos que produzam calor.
6. Não insira objetos na ventilação aberta ou na área da grade da ventoinha da fonte de alimentação.
7. Não modifique os cabos e/ou conectores incluídos com esta fonte de alimentação.
8. Se esta fonte de alimentação usa cabos modulares, utilize apenas os cabos fornecidos pelo fabricante.
9. O conector de alimentação de 24 pinos tem um conector de 4 pinos removível.
   O conector de 4 pinos não é um conector P4 ou ATX 12 V.
   Não force o cabo no soquete P4 ou ATX +12 V da placa-mãe.
10. O não cumprimento de qualquer uma das instruções do fabricante e/ou qualquer uma dessas instruções de segurança anulará imediatamente todas as garantias.

중요 한전 정보

주의: 감전의 위험이 있음!

1. 제조업체의 지침을 따르고 안전 경고에 유의하며 설치하십시오. 그렇지 않으면 파워 서플라이 또는 본체가 손상을 입거나 심각한 부상 .
2. 또는 사망으로 이어질 수 있습니다.
3. 파워 서플라이는 높은 전압의 전류가 흐릅니다.
   파워 서플라이의 케이스를 열거나 파워 서플라이를 수리하려고 하지 마십시오.
   사용자가 수리할 수 있는 부품이 없습니다.
4. 이 제품은 실내용으로 제작되었습니다.
5. 물이 있는 장소나 고온 또는 다습한 환경에서는 파워 서플라이를 사용하지 마십시오.
   라디에이터, 온풍구, 난로 등 열을 분출하는 장치 근처에 설치하지 마십시오.
6. 파워 서플라이의 통풍구 또는 팬 그릴에 이물질을 삽입하지 마십시오.
7. 파워 서플라이와 함께 제공된 케이블 또는 커넥터를 개조하지 마십시오.
8. 파워 서플라이가 모듈식 케이블을 사용하는 경우, 제조업체에서 제공한 케이블만 사용하십시오.
9. 24핀 메인 파워 커넥터에는 탈부착이 가능한 4핀 커넥터가 장착되어 있습니다.
   해당 4핀 커넥터는 P4 또는 ATX 12V 커넥터와는 다릅니다.
   이 케이블을 마더보드에 있는 P4 또는 ATX 12V 소켓에 강제로 연결하지 마십시오.
10. 제조업체의 지침이나 안전 지침을 따르지 않으면 보증과 보장 사항이 폐지됩니다.

安全に関する重要な情報

注意：感電の危険があります！

1. 製造元によるすべての指示と安全に関する警告に従って取り付けてください。
   従わなかった場合、電源装置またはシステムが損傷したり、重大なけがや死亡の原因になることがあります。
2. 電源装置には高圧電流が流れています。
   電源装置のケースを開けたり、電源装置を修理しようとしないでください。
   お客様ご自身で修理可能なコンポーネントはありません。
3. この製品は屋内での使用のみを想定して設計されています。
4. 電源装置を水の近くや高温多湿の環境で使用しないでください。
5. ラジエーター、ヒーター、ストーブなど熱源の近くには設置しないでください。
6. 電源装置の排気口や通気口に物を挿入しないでください。
7. この電源装置に付属のケーブルまたはコネクタを改造しないでください。
8. この電源装置でモジュラーケーブルを使用する場合は、製造元が提供するケーブル以外は使用しないでください。
9. 24 ピン主電源コネクタには、取り外し可能な 4 ピンコネクタがあります。
   この 4 ピンコネクタはP4 または ATX 12V コネクタではありません。
   このケーブルをマザーボードの P4 または ATX + 12V ソケットに差し込まないでください。
10. 製造元による指示またはこの安全に関する指示のいずれかの事項を遵守しなかった場合、すべての保証は直ちに無効になります。

重要安全信息

注意触电危险！

1. 请按照所有制造商说明和安全警告进行安装。
   否则，可能会对您的电源或系统造成损害，甚至可能导致人员伤亡。
2. 电源中存在高压。
   切勿打开电源外壳或者尝试修复电源；没有用户可维护的部件。
3. 本产品仅限室内使用。
4. 切勿在有水或高温或高湿度环境下使用电源。
5. 安装位置切勿靠近任何热源，如散热器、热量记录器、烤箱或其他发热的家电。
6. 切勿在电源的通风口或风扇格栅区域中插入任何物体。
7. 切勿修改此电源随附的电缆和/或接头。
8. 如果此电源使用模块化电缆，请仅使用制造商提供的电缆。
9. 24 针主电源连接器有一个可拆卸的 4 针接口。
   此 4 针接口不是 P4 或 ATX 12V 接口。
   切勿将此电缆强行插入到主板的 P4 或 ATX +12V 插槽中。
10. 如不遵守任何制造商说明和/或这些安全说明中的任一条，所有担保和保证将立即失效。

重要安全資訊

小心觸電危險！

1. 請遵照所有製造商的指示和安全警告進行安裝。
   否則可能導致電源供應器或系統損壞，且可能造成嚴重傷亡。
2. 電源供應器存在高壓電。
   請勿開啟電源供應器機殼或嘗試維修電源供應器；所有元件皆不得由使用者自行維修。
3. 本產品的設計僅限室內使用。
4. 請勿在近水處，或者高溫或高濕度環境中使用電源供應器。
5. 請勿安裝在任何靠近熱源處 (如散熱器、熱調節器、爐具或其他會產生高溫的裝置)。
6. 請勿將任何物體插入電源供應器的開放式通風處或風扇網。
7. 請勿改裝此電源供應器隨附的連接線和/或接頭。
8. 如果此電源供應器是使用模組化連接線，請僅使用製造商所提供的連接線。
9. 24 針腳的主電源線接頭具有卸除式 4 針腳接頭。
   此 4 針腳接頭並非 P4 或 ATX 12V 接頭。
   請勿強行將此纜線插入主機板上的 P4 或 ATX +12V 插座。
10. 若未能遵守任何製造商的指示和/或安全指示，所有保固與保證將立即失效。

06.限用物质及元素列表/限用物質及元素清單

ROHS COMPLIANCE

設備名稱：交換式電源供應器
型號（型式）PS-2501, PS-2502, PS-2503

	限用物質及其化學符號 Restricted substances and its chemical symbols					
單元Unit	鉛 Lead (Pb)	汞 Mercury (Hg)	鎘 Cadmium (Cd)	六價鉻 Hexavalent chromium (Cr+6)	多溴聯苯 Polybrominated biphenyls (PBB)	多溴二苯醚 Polybrominated diphenyl ethers (PBDE)
電路板	○	○	○	○	○	○
元器件	—	○	○	○	○	○
外殼與 散熱片	—	○	○	○	○	○
線材	—	○	○	○	○	○
風扇	—	○	○	○	○	○
其他輔料	○	○	○	○	○	○

備考1. “超出0.1wt%”及“超出0.01wt%”係指限用物質之百分比含量超出百分比含量基準值。
備考2. “○” 係指該項限用物質之百分比含量未超出百分比含量基準值。
備考3. “—” 係指該項限用物質為排除項目。

07. SUPPORT AND SERVICE

SUPPORT AND SERVICE

If you have any questions or problems with the NZXT product you purchased, please don't hesitate to contact us using our support system. service@nzxt.com support.nzxt.com

Please include a detailed explanation of your problem and your proof of purchase. For comments and suggestions, you can e-mail our design team, designer@nzxt.com.

Lastly we would like to thank you for your support by purchasing this product. For more information about NZXT, please visit us online. NZXT Website: NZXT.com

SOPORTE Y SERVICIO

Si tiene preguntas o problemas con el producto NZXT que usted compró, no dure en ponerse en contacto con service@nzxt.com y suministrar una explicación detallada de su problema así como su prueba de compra.

Puede hacer consultas sobre piezas de repuesto en support.nzxt.com.

Para comentarios y sugerencias, escriba un mensaje de correo electrónico a nuestro equipo de diseño: designer@nzxt.com.

Gracias por comprar un producto NZXT. Para más información acerca de NZXT, visítenos en línea. Página web de NZXT: NZXT.com

SUPPORT ET SERVICE

Si vous avez des questions ou des problèmes avec le produit NZXT que vous avez acheté, n'hésitez pas à contacter service@nzxt.com avec une description détaillée de votre problème et votre preuve d'achat.

Vous pouvez aussi commander des pièces de remplacement auprès support.nzxt.com.

Pour les commentaires et les suggestions, envoyez un email à notre équipe de design, designer@nzxt.com.

Merci d'avoir acheté ce produit de NZXT. Pour plus d'informations sur NZXT, visitez notre site Web. Site Web de NZXT : NZXT.com

KUNDENDIENST UND SERVICE

Falls Fragen oder Probleme bezüglich Ihres NZXT-Produktes auftreten, wenden Sie sich bitte mit einer detaillierten Problembeschreibung und Ihrem Kaufbeleg an service@nzxt.com.

Ersatzteile können Sie unter support.nzxt.com anfragen.

Kommentare und Anregungen senden Sie bitte per designer@nzxt.com an unser Designteam.

Vielen Dank, dass Sie ein NZXT-Produkt erworben haben. Weitere Informationen über NZXT erhalten Sie im Internet. NZXT-Webseite: NZXT.com

ASSISTENZA E SERVIZIO

In caso di dubbi o problemi con il prodotto NZXT acquistato, non esitate a contattarci utilizzando il nostro sistema di assistenza. support.nzxt.com Includere una spiegazione dettagliata del problema e la prova di acquisto. service@nzxt.com

Per commenti e suggerimenti, siete pregati di inviare un messaggio al nostro team di progettisti, all'indirizzo: designer@nzxt.com.

Infine, vogliamo ringraziarvi del vostro supporto con l'acquisto di questo prodotto. Per altre informazioni su NZXT, visitate il nostro sito. Sito NZXT: NZXT.com

ASSISTÊNCIA E MANUTENÇÃO

Caso tenha questões ou problemas com o produto NZXT adquirido, não hesite em contactar-nos através do endereço service@nzxt.com fornecendo a explicação detalhada do seu problema e a prova de compra.

Poderá solicitar peças de substituição através do endereço support.nzxt.com.

Para comentários e sugestões, contacte a nossa equipa de design através do endereço de e-mail, designer@nzxt.com.

Obrigado por ter adquirido um produto NZXT. Para mais informações acerca da NZXT, visitenos online. Web site da NZXT: NZXT.com

지원 및 서비스

구입한 NZXT 제품과 관련하여 질문 또는 문제가 있을 경우, 당사의 지원 시스템 support.nzxt.com 을 사용하여 문의하십시오.

문제를 자세히 기술하고 구매 증빙을 제출하십시오. service@nzxt.com

의견 또는 제안 사항이 잇을경우 당사 설계 팀에 designer@nzxt.com으로 이메일을 보내십시오.

마지막으로이 제품을 구입하여 당사를 응원해 주셔서 감사합니다. NZXT에 대해 자세히 알려면온라인으로 방문하십시오. NZXT 웹사이트: NZXT.com

サポートおよびサービス

購入されましたNZXTの製品に関するご質問または問題は、問題の詳細および購入の証明を添えて、ご遠慮なく service@nzxt.com までご連絡ください。

交換部品は support.nzxt.com までお尋ねください。

ご意見およびご提案は弊社設計チーム、designer@nzxt.com までメールを送信してください。

NZXT製品をご購入いただきましてありがとうございます。NZXTに関する詳細は、インターネット上のウェブサイトをご覧ください。NZXT ウェブサイト: NZXT.com

支持和服务

如果有任何疑问或者在使用 NZXT 产品的过程中遇到任何问题，欢迎联络 service@nzxt.com，联络时请提供关于问题的详细说明及购买凭证。

您可以向 support.nzxt.com 查询更换部件。

如有任何意见或建议,欢迎致信我们的设计团队，电子邮件地址是 designer@nzxt.com。

感谢您购买 NZXT 产品。有关 NZXT的更多信息，请造访我们的在线网站。NZXT 网站：NZXT.com

支援和服務

如果在使用NZXT 產品的過程中有遇到任何問題或疑問，歡迎聯繫 service@nzxt.com， 並請提供問題的詳細敘述及購買證明。

您可以透過 support.nzxt.com 查詢更換部件。

如有任何意見或建議，歡迎來信與設計團隊聯繫designer@nzxt.com。

最後，感謝您購買 NZXT 產品。有關 NZXT 的更多資訊，請瀏覽我們的網站。NZXT 網站：NZXT.com

NZXT

NZXT, Inc. | 605 E Huntington Drive, Suite 213, Monrovia, CA 91016 USA
NZXT Europe GmbH | Messe München, Kronstadter Str. 4, Munich, 81677

+1 (800) 228-9395 / service@nzxt.com / nzxt.com
台灣恩傑科技股份有限公司 | 新北市板橋區縣民大道二段68號14樓