ViewSonic®

LSD400HD
LSD401HD

Projector
User Guide

IMPORTANT: Please read this User Guide to obtain important information on installing and using your product in a safe manner, as well as registering your product for future service. Warranty information contained in this User Guide will describe your limited coverage from ViewSonic® Corporation, which is also found on our web site at http://www.viewsonic.com in English, or in specific languages using the Regional selection box of our website.

Model Number : VS20625 | VS20624
Product Name : LSD400HD | LSD401HD

Thank you for choosing ViewSonic®

As a world-leading provider of visual solutions, ViewSonic® is dedicated to exceeding the world's expectations for technological evolution, innovation, and simplicity. At ViewSonic®, we believe that our products have the potential to make a positive impact in the world, and we are confident that the ViewSonic® product you have chosen will serve you well.

Once again, thank you for choosing ViewSonic®!

Safety Precautions

Read these instructions carefully, keep them in a safe place, and follow all warnings and instructions.

General Safety Precautions

- During normal operation, warm air and a slight odor may come from the ventilation.
- When using the projector, avoid direct exposure to the projector’s exhaust vent.
- Keep the remote control or loose batteries away from children or pets.

Installation

- Follow the manufacturer's recommended installation guidelines to ensure safe and optimal operation.
- Leave at least 50 cm (20 in.) of open space around the projector to ensure proper ventilation.
- Place the projector in a well-ventilated area. Do not place anything on the projector that prevents heat dissipation.
- Do not place any heavy objects on the projector or cables.
- Do not place the projector in an unstable location. The projector may fall, resulting in injury or damage.
- Do not stand the projector upright. The projector may fall, resulting in injury or damage.
- Do not use the projector near open flames, sparks, or hot surfaces.
- Do not use the projector near water or in humid conditions and avoid exposing it to rain or moisture.
- Do not expose the projector to direct sunlight or other sources of sustained heat.
- Always route and manage cables connected to your projector to prevent tripping, pulling, or grabbing.
- The projector is designed to operate at 120/240V AC. Unstable voltages can harm the projector. Use a power stabilizer, surge protector, or UPS in areas with frequent power cuts or surges.

Power Cord Safety

- Do not compress the power cord, particularly at the plug and at the point where it connects to the projector.
- Do not use the projector if the power cord or plug is damaged.
- The power cord is designed with a grounding prong to ensure safe operation. Do not remove or damage the grounding prong.
- Only use the original power cord and do not use damaged or modified cords.
- Unplug the projector when it will be unused for long periods of time.

Handling

- When moving the projector, handle it with care to avoid damage or injury.
- Only use attachments and accessories specifically designed and approved by the manufacturer to ensure compatibility and safety.

Troubleshooting

- If smoke appears, an abnormal noise, or a strange odor is present, immediately turn the projector off and contact your reseller or ViewSonic. It is dangerous to continue using the projector.
- Refer all servicing to qualified service personnel.
- Do not disassemble the projector. It contains electrical components that can cause shock.

Lens Safety

- When using the projector, avoid looking directly at the projector lens.
- Avoid blocking the projection lens when using the projector, as this can cause objects to overheat and potentially ignite.
- When using the projector, make sure the lens shutter is open and the lens cap is removed.

Ceiling Mounting

- Use a compatible ceiling mount kit and ensure secure installation for safe operation.
- Improper ceiling mount kits can lead to projector falls due to incorrect screw size or length.
- Ceiling mounting is recommended to place the projector above the eyes of children.

Caution

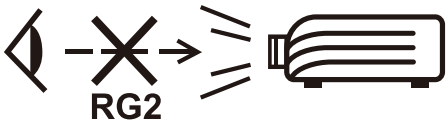

Possibly hazardous optical radiation is emitted from this product. As with any bright light source, do not stare into the beam, RG2 IEC 62471-5:2015. Additional warning against eye exposure for close exposures less than 1 m (3.28 ft).

Laser Caution

This product belongs to CLASS I laser product and complies with IEC 60825-1:2014, EN 60825-1:2014/A11:2021, EN 50689:2021. CLASS 1 CONSUMER LASER PRODUCT EN50689:2021.

IEC 60825-1:2014, EN 60825-1:2014+A11:2021, EN 50689:2021 CLASS 1 CONSUMER LASER PRODUCT RISK GROUP 2, Complies with 21 CFR 1040.10 and 1040.11 except for conformance as a Risk Group 2 LIP as defined in IEC 62471-5:Ed.1.0. For more information see Laser Notice No. 57, dated May 8, 2019.
IEC 60825-1:2014 等級1雷射產品RG2危險等級
IEC 60825-1:2014 1类激光产品RG2危险等级

The above laser cautions are located on the bottom of this projector.

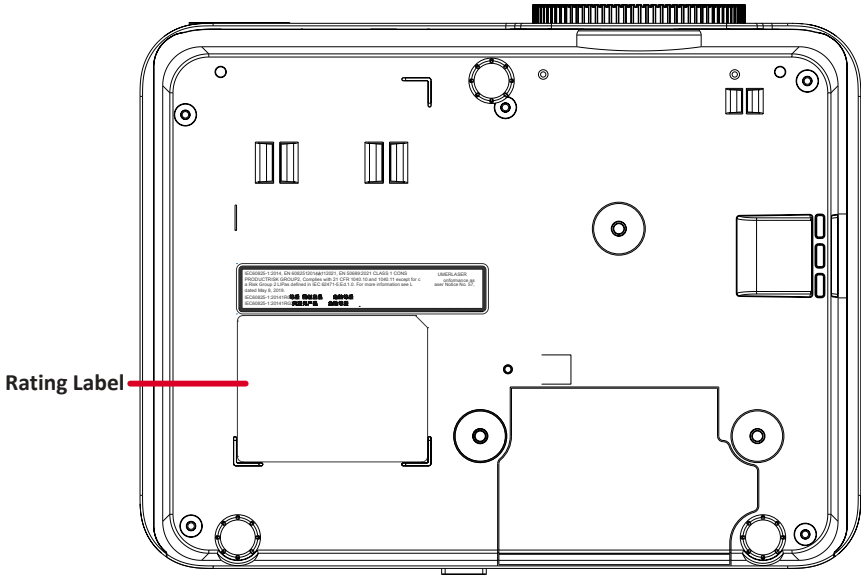

- Notice is given to supervise children and to never allow them to stare into the projector beam at any distance from the projector.
- Notice is given to use caution when using the remote control for starting the projector while in front of the projection lens.
- Notice is given to the user to avoid the use of optical aids such as binoculars or telescopes inside the beam.

Contents

Safety Precautions 3

Introduction 10

Package Contents 10

LSD400HD 10

LSD401HD 11

Projector 12

Overview 12

Keypad 14

Indicator Lights 14

I/O Ports 15

Remote Control 17

Overview 17

Receiver Range 19

Installing the Batteries 20

Initial Setup 21

Positioning the Projector 21

Projection Dimensions 22

LSD400HD 22

LSD401HD 24

Mounting the Projector 26

Using the Security Bar 27

Making Connections 28

Connecting to Power 28

Connecting to External Devices 29

Using the Projector 30

Turning the Projector On 30

Turning the Projector Off 30

Selecting an Input Source 31

Adjusting the Projected Image 32

Projection Angle 32

Image Size and Clarity 32

Correcting Keystone 33

Menu Operation 34

On-Screen Display Menu 34
Menu Navigation 35
Menu Options 36
Display 36
Audio 39
Setup 40
Network 43
Information 46

Appendix 47

Specifications 47
Projector Dimensions 48
LSD400HD 48
LSD401HD 48
On-Screen Display Menu Tree 49
Supported Resolutions and Timings 55
HDMI 1 | HDMI 2 55
Troubleshooting 57
LED Indicators 60
Maintenance 61
General Precautions 61
Cleaning the Lens 61
Cleaning the Case 61
Storing the Projector 61
Disclaimer 61

Regulatory and Service Information 62

Compliance Information 62
FCC Compliance Statement 62
Industry Canada Statement..... 62
CE Conformity for European Countries 63
Declaration of RoHS2 Compliance..... 64
Indian Restriction of Hazardous Substances 65
Product Disposal at End of Product Life 65
Copyright Information 66
Customer Service 67
Limited Warranty 68
Mexico Limited Warranty..... 71

Introduction

Package Contents

LSD400HD

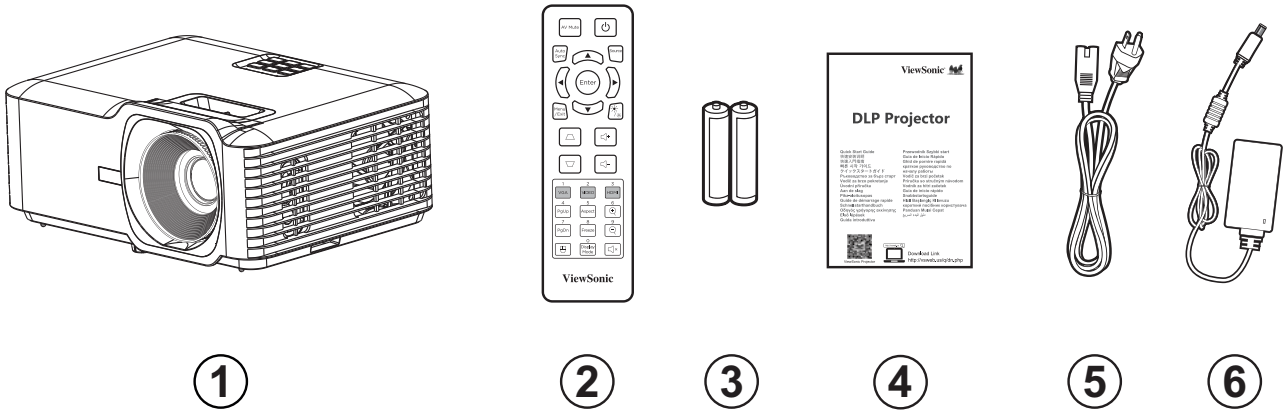

Number	Item
1	Projector
2	Remote Control
3	Batteries
4	Quick Start Guide
5	Power Cord
6	Power Adapter

Note: The cables and remote control may vary depending on the region or country you purchased the product.

LSD401HD

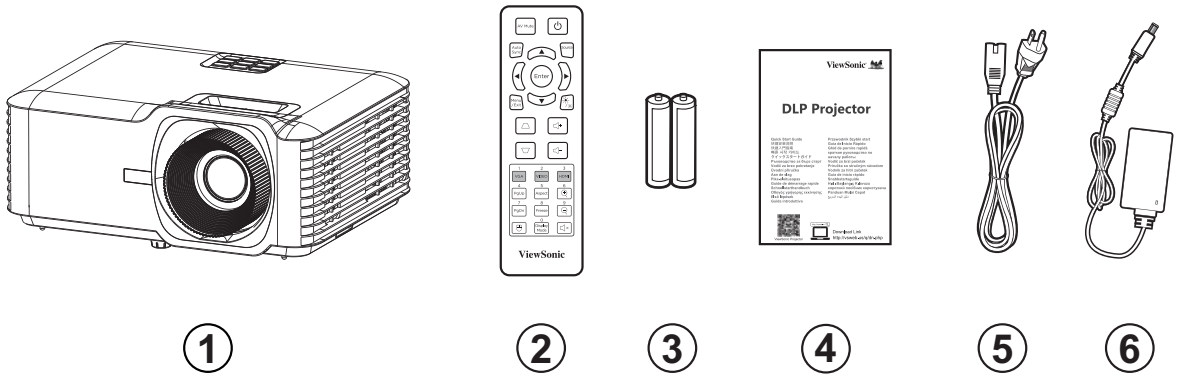

Number	Item
1	Projector
2	Remote Control
3	Batteries
4	Quick Start Guide
5	Power Cord
6	Power Adapter

Note: The cables and remote control may vary depending on the region or country you purchased the product.

Projector

Overview

LSD400HD

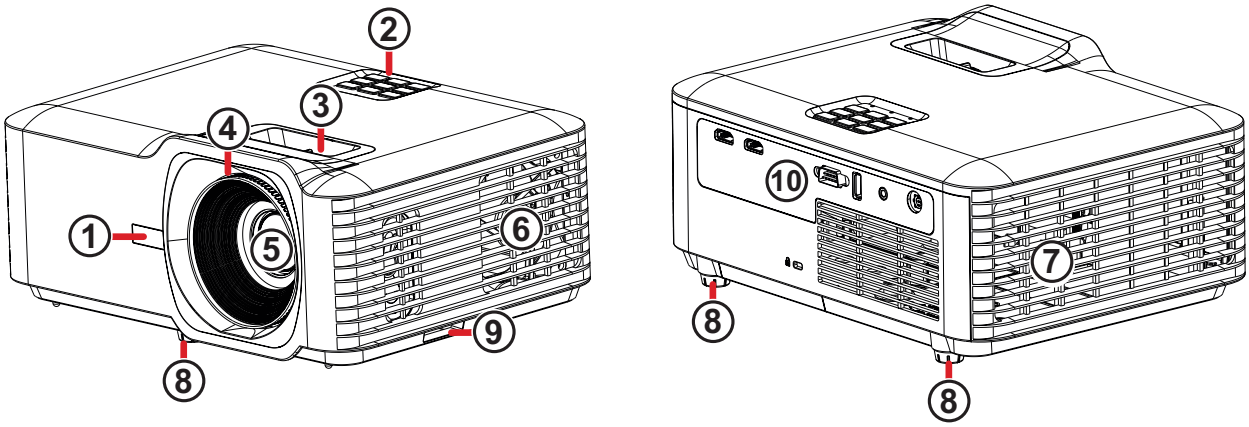

Number	Part
1	Remote Control IR Receiver
2	Keypad and Indicator Lights
3	Zoom Ring
4	Focus Ring
5	Projection Lens
6	Vent
7	Vent
8	Adjustable Feet
9	Security Bar
10	I/O Ports

LSD401HD

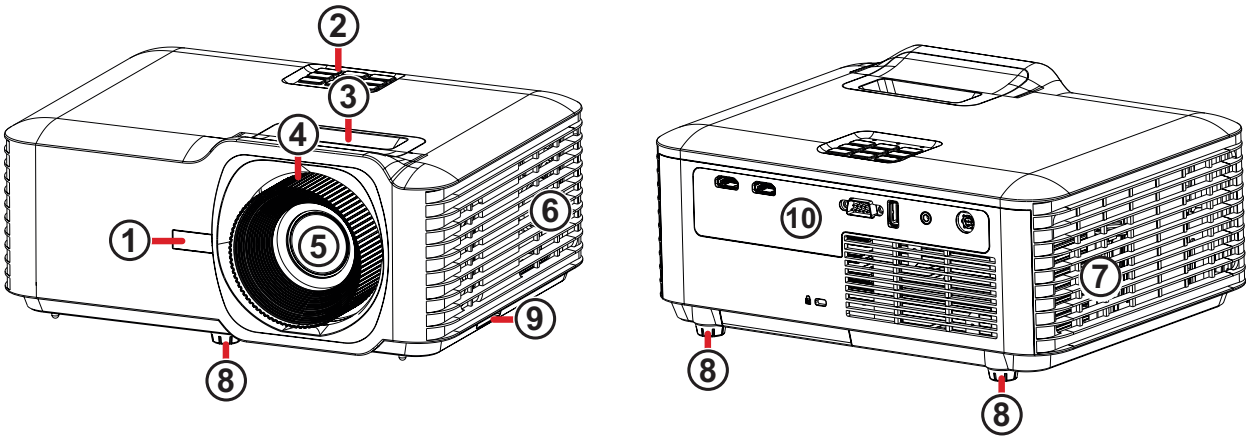

Number	Part
1	Remote Control IR Receiver
2	Keypad and Indicator Lights
3	Zoom Ring
4	Focus Ring
5	Projection Lens
6	Vent
7	Vent
8	Adjustable Feet
9	Security Bar
10	I/O Ports

Keypad

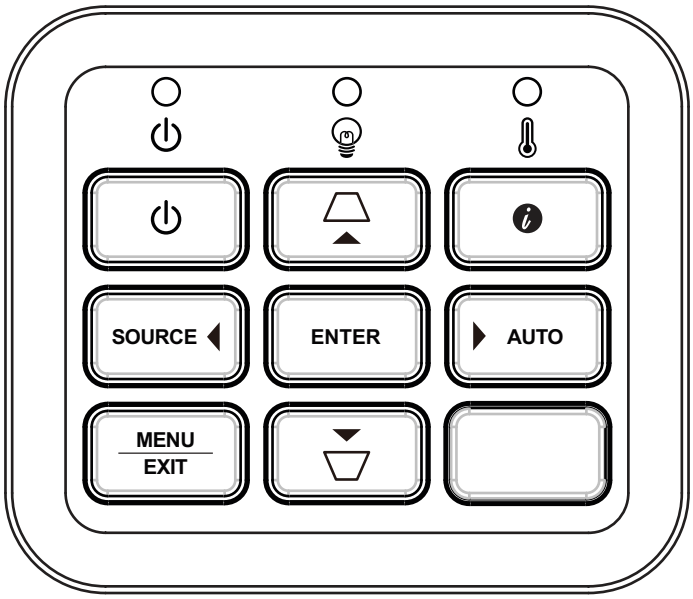

Button		Description
⏻	**Power**	Turns the projector on and off.
⏢ ⏢	**Keystone**	Corrects distorted images.
▲ ▼ ◀ ▶	**Navigation**	Selects an item or adjusts the value in the menu.
MENU	**Menu**	Opens the On-Screen Display Menu.
EXIT	**Exit**	Closes the On-Screen Display Menu.
SOURCE	**Source**	Opens the input source menu.
ℹ	**Information**	Opens the **Information** menu.
ENTER	**Enter**	Confirms the selected item.
AUTO	**Auto**	Selects the best resolution and timing for the projected image.

Indicator Lights

Indicator Light	Description
⏻	Power indicator light
💡	Light source indicator light
🌡	Temperature indicator light

I/O Ports

LSD400HD

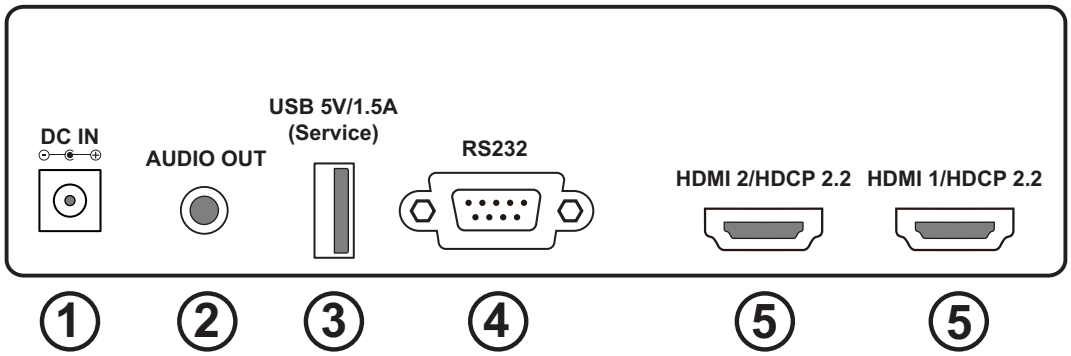

Connection Type		Usage
1	DC IN	For powering the projector.
2	Audio Out	For use with external speakers.
3	USB Type A	For servicing and powering devices.
4	RS-232	For remote operation of the projector's power, volume, input selection, brightness, and other functions from an external computer.
5	HDMI	HDMI v. 2.0 that supports HDCP 2.2 for audio/video projection.

LSD401HD

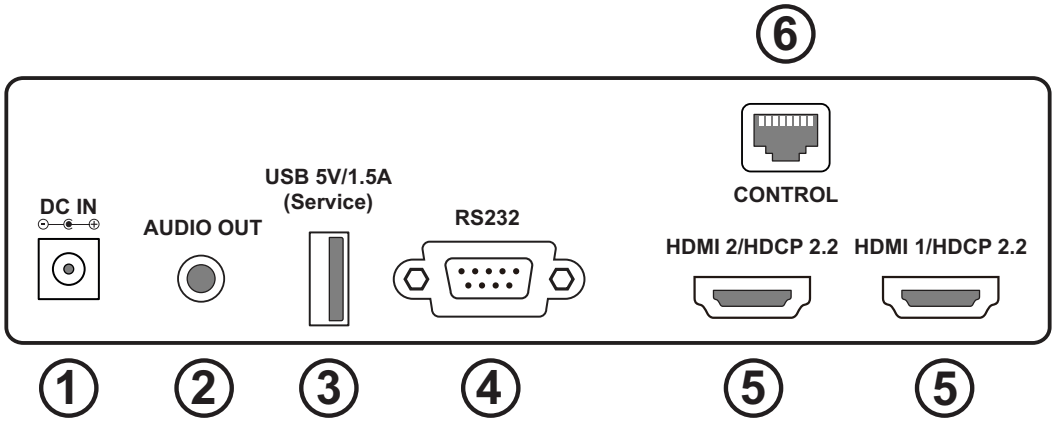

Connection Type		Usage
1	DC IN	For powering the projector.
2	Audio Out	For use with external speakers.
3	USB Type A	For servicing and powering devices.
4	RS-232	For remote control of the projector's power, volume, input selection, brightness, and other functions from an external computer.
5	HDMI	HDMI v. 2.0 that supports HDCP 2.2 for audio/video projection.
6	RJ45	For network remote operation.

Remote Control

Overview

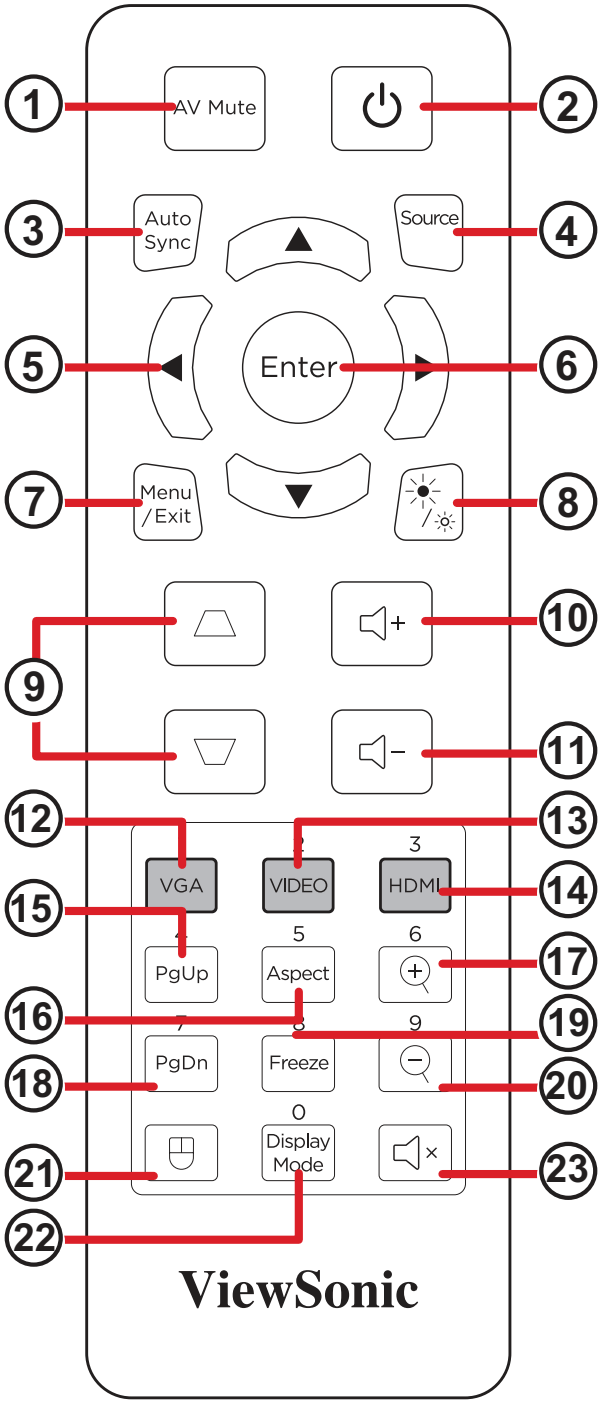

Button			Description
1	AV Mute	**AV Mute**	Hides the projected image and mutes the volume.
2		**Power**	Turns the projector on and off.
3	Auto Sync	**Auto Sync**	Selects the best resolution and timing for the projected image.
4	Source	**Source**	Opens the input source menu.
5		**Navigation**	Selects an item or adjusts the value in the menu.
6	Enter	**Enter**	Confirms the selected item.
7	Menu / Exit	**Menu**	Opens the On-Screen Display Menu.
		Exit	Closes the On-Screen Display Menu.
8		**Brightness**	Opens the **Light Source Mode** menu.
9		**Keystone**	Corrects distorted images.
10		**Volume Up**	Increases the volume level.
11		**Volume Down**	Decreases the volume level.
12	1 VGA	**VGA**	*This button is unsupported.*
13	2 VIDEO	**Video**	*This button is unsupported.*
14	3 HDMI	**HDMI**	Sets HDMI as the input source.
15	4 PgUp	**Page Up**	*This button is unsupported.*
16	5 Aspect	**Aspect**	Opens the **Aspect Ratio** menu.
17	6	**Zoom In**	Increases the projected image's size.
18	7 PgDn	**Page Down**	*This button is unsupported.*
19	8 Freeze	**Freeze**	Holds the projected image.
20	9	**Zoom Out**	Decreases the projected image's size.
21		**Mouse Mode**	*This button is unsupported.*
22	0 Display Mode	**Display Mode**	Opens the **Color Mode** menu.
23		**Mute**	Stops audio output.

Receiver Range

For optimal performance, aim the remote control directly at the IR receiver. The maximum operation range is 8 m (26 ft) with a horizontal and vertical field of view of ±30 degrees.

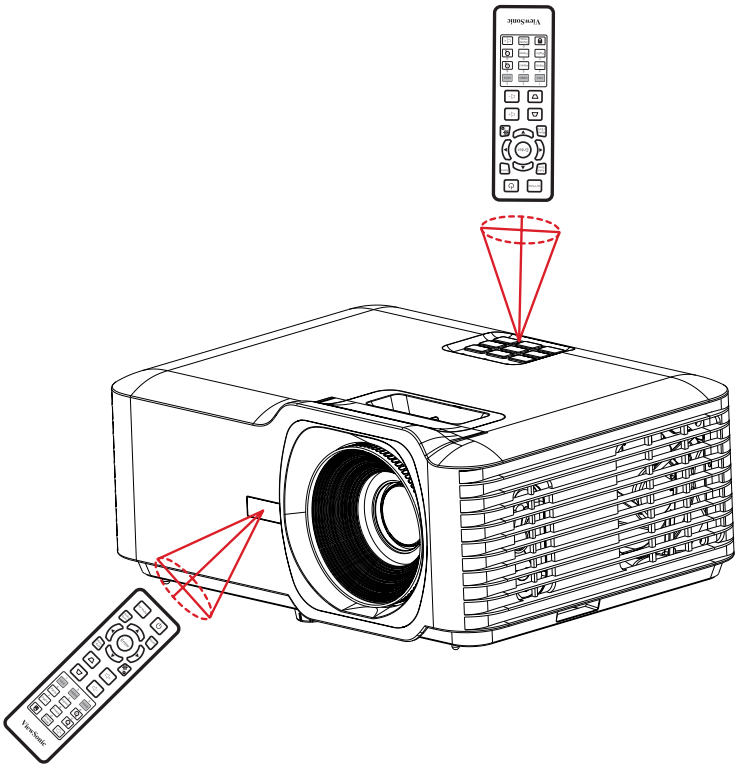

Installing the Batteries

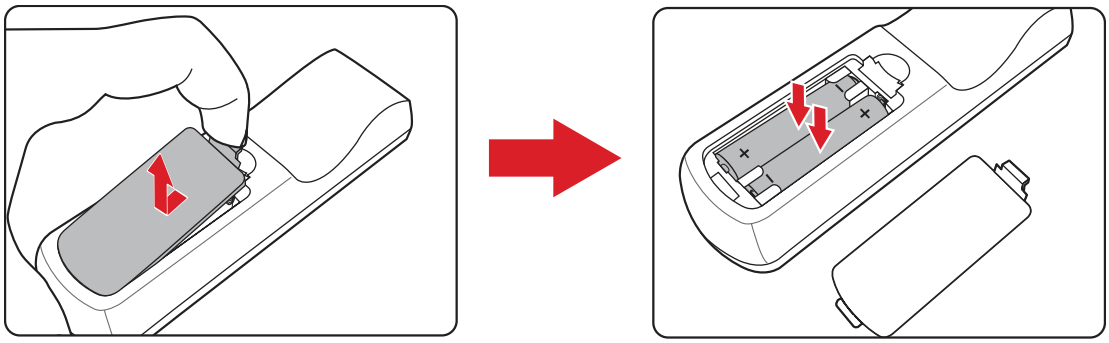

1. Open the battery compartment by removing the battery cover.
2. Insert two AAA batteries, ensuring correct polarity.
3. Replace the battery cover and press it down until it clicks into place.

Note:

- Store the remote control and batteries away from heat and humidity.
- Use only recommended battery types.
- Remove batteries when not in use for extended periods.
- Dispose of old batteries following the manufacturer’s instructions and local regulations.

Initial Setup

Positioning the Projector

The projector can be positioned either in front of or behind the screen. Alternatively, it can be mounted on the ceiling.

Position	Description
Front	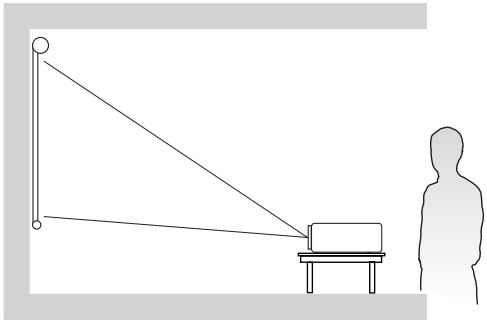
Ceiling-Top	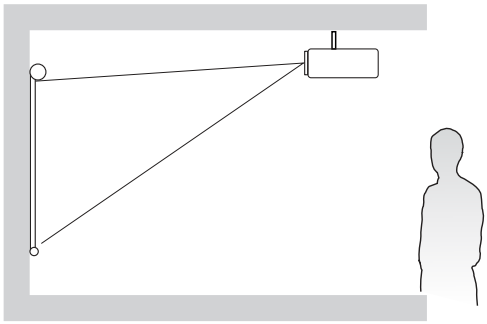
Rear[1]	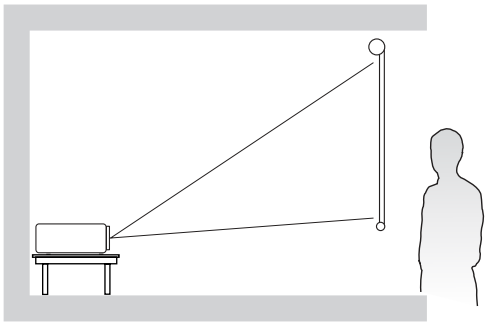
Rear-Top[1]	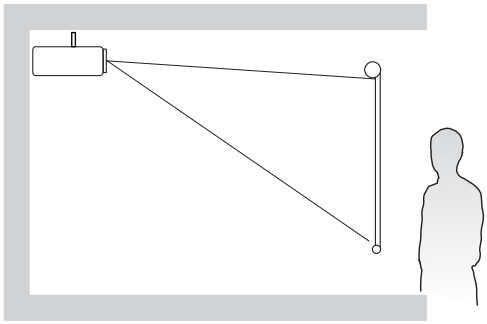

1 – A rear projection screen is required.

Projection Dimensions

LSD400HD

Use the tables below to determine the recommended projector-to-screen distance for your desired image height.

16:9 Image on a 16:9 Screen

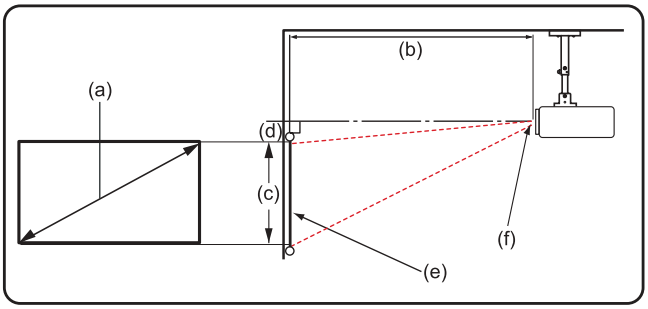

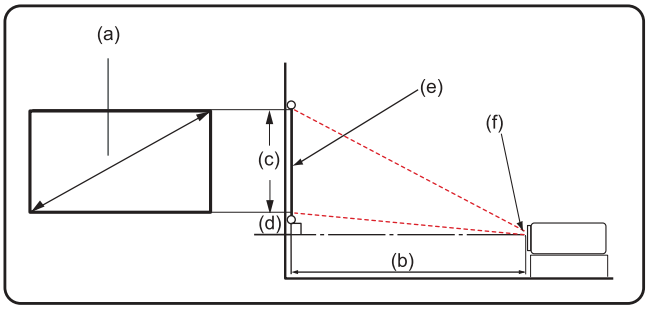

Note: (e) = Screen / (f) = Center of Lens

(a) Screen Size		(b) Projection Distance				(c) Image Height		(d) Vertical Offset	
		Minimum		Maximum					
in.	mm	in.	mm	in.	mm	in.	mm	in.	mm
30	762	38.70	983	42.36	1076	14.71	374	2.35	60
40	1016	51.60	1311	56.48	1435	19.61	498	3.14	80
50	1270	64.50	1638	70.60	1793	24.51	623	3.92	100
60	1524	77.40	1966	84.72	2152	29.42	747	4.71	120
70	1778	90.30	2293	98.84	2510	34.32	872	5.49	139
80	2032	103.19	2621	112.96	2869	39.22	996	6.28	159
90	2286	116.09	2949	127.08	3228	44.12	1121	7.06	179
100	2540	128.99	3276	141.20	3586	49.03	1245	7.84	199
110	2794	141.89	3604	155.31	3945	53.93	1370	8.63	219
120	3048	154.79	3932	169.43	4304	58.83	1494	9.41	239
130	3302	167.69	4259	183.55	4662	63.73	1619	10.20	259
140	3556	180.59	4587	197.67	5021	68.64	1743	10.98	279
150	3810	193.49	4915	211.79	5380	73.54	1868	11.77	299
200	5080	257.99	6553	282.39	7173	98.05	2491	15.69	398
250	6350	322.48	8191	352.99	8966	122.57	3113	19.61	498
300	7620	386.98	9829	423.59	10759	147.08	3736	23.53	598

Note:

- These figures are for reference purposes only when setting up the projector.
- For optimal results, test the projector's image size and distance before permanent installation.

16:9 Image on a 4:3 Screen

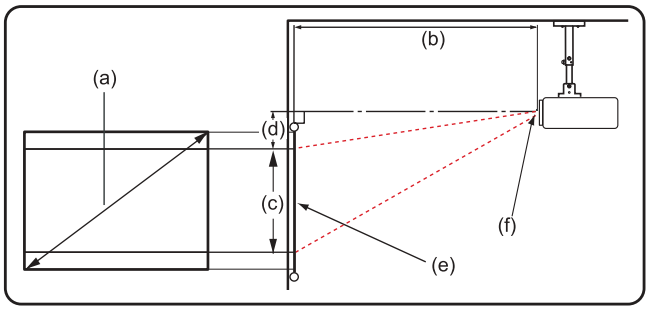

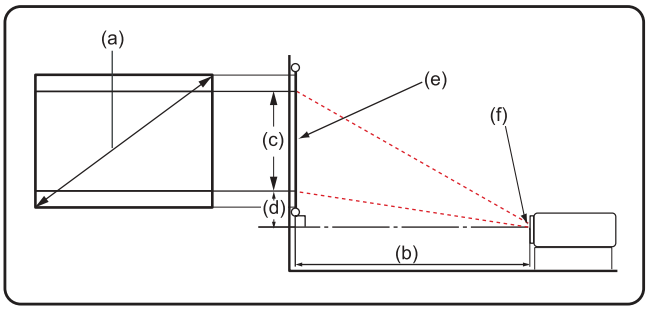

Note: (e) = Screen / (f) = Center of Lens

(a) Screen Size		(b) Projection Distance				(c) Image Height		(d) Vertical Offset	
		Minimum		Maximum					
in.	mm	in.	mm	in.	mm	in.	mm	in.	mm
30	762	35.52	902	38.88	988	13.50	343	2.16	55
40	1016	47.36	1203	51.84	1317	18.00	457	2.88	73
50	1270	59.20	1504	64.80	1646	22.50	572	3.60	91
60	1524	71.04	1804	77.76	1975	27.00	686	4.32	110
70	1778	82.88	2105	90.72	2304	31.50	800	5.04	128
80	2032	94.72	2406	103.68	2633	36.00	914	5.76	146
90	2286	106.56	2707	116.64	2963	40.50	1029	6.48	165
100	2540	118.40	3007	129.60	3292	45.00	1143	7.20	183
110	2794	130.24	3308	142.56	3621	49.50	1257	7.92	201
120	3048	142.08	3609	155.52	3950	54.00	1372	8.64	219
130	3302	153.92	3910	168.48	4279	58.50	1486	9.36	238
140	3556	165.76	4210	181.44	4609	63.00	1600	10.08	256
150	3810	177.60	4511	194.40	4938	67.50	1715	10.80	274
200	5080	236.80	6015	259.20	6584	90.00	2286	14.40	366
250	6350	296.00	7518	324.00	8230	112.50	2858	18.00	457
300	7620	355.20	9022	388.80	9876	135.00	3429	21.60	549

Note:

- These figures are for reference purposes only when setting up the projector.
- For optimal results, test the projector's image size and distance before permanent installation.

LSD401HD

Use the tables below to determine the recommended projector-to-screen distance for your desired image height.

16:9 Image on a 16:9 Screen

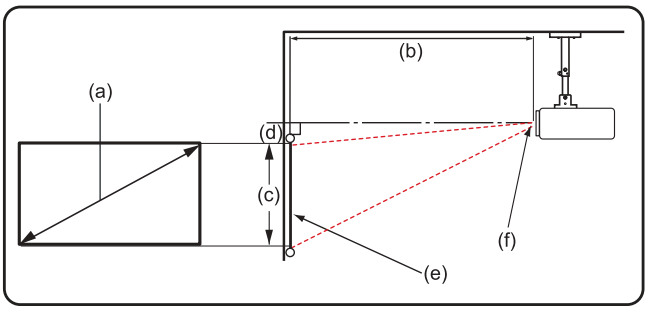

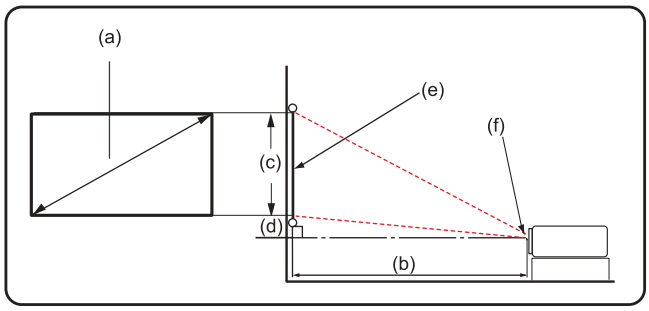

Note: (e) = Screen / (f) = Center of Lens

(a) Screen Size		(b) Projection Distance				(c) Image Height		(d) Vertical Offset	
		Minimum		Maximum					
in.	mm	in.	mm	in.	mm	in.	mm	in.	mm
30	762	29.55	750	38.44	976	14.71	374	2.35	60
40	1016	39.40	1001	51.25	1302	19.61	498	3.14	80
50	1270	49.24	1251	64.06	1627	24.51	623	3.92	100
60	1524	59.09	1501	76.87	1953	29.42	747	4.71	120
70	1778	68.94	1751	89.69	2278	34.32	872	5.49	139
80	2032	78.79	2001	102.50	2603	39.22	996	6.28	159
90	2286	88.64	2251	115.31	2929	44.12	1121	7.06	179
100	2540	98.49	2502	128.12	3254	49.03	1245	7.84	199
110	2794	108.34	2752	140.93	3580	53.93	1370	8.63	219
120	3048	118.19	3002	153.75	3905	58.83	1494	9.41	239
130	3302	128.03	3252	166.56	4231	63.73	1619	10.20	259
140	3556	137.88	3502	179.37	4556	68.64	1743	10.98	279
150	3810	147.73	3752	192.18	4881	73.54	1868	11.77	299
200	5080	196.98	5003	256.24	6509	98.05	2491	15.69	398
250	6350	246.22	6254	320.30	8136	122.57	3113	19.61	498
300	7620	295.46	7505	384.36	9763	147.08	3736	23.53	598

Note:

- These figures are for reference purposes only when setting up the projector.
- For optimal results, test the projector's image size and distance before permanent installation.

16:9 Image on a 4:3 Screen

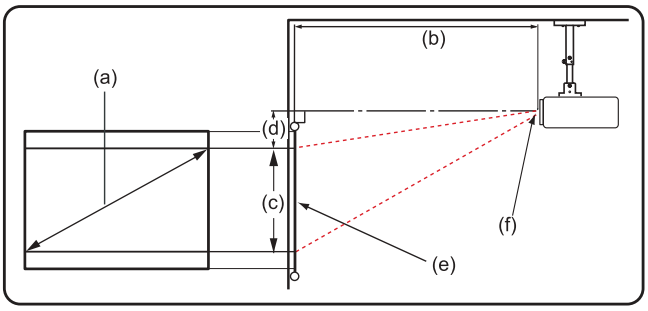

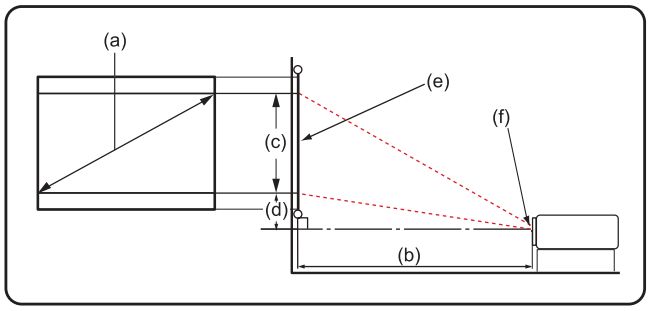

Note: (e) = Screen / (f) = Center of Lens

(a) Screen Size		(b) Projection Distance				(c) Image Height		(d) Vertical Offset	
		Minimum		Maximum					
in.	mm	in.	mm	in.	mm	in.	mm	in.	mm
30	762	27.12	689	35.28	896	13.50	343	2.16	55
40	1016	36.16	918	47.04	1195	18.00	457	2.88	73
50	1270	45.20	1148	58.80	1494	22.50	572	3.60	91
60	1524	54.24	1378	70.56	1792	27.00	686	4.32	110
70	1778	63.28	1607	82.32	2091	31.50	800	5.04	128
80	2032	72.32	1837	94.08	2390	36.00	914	5.76	146
90	2286	81.36	2067	105.84	2688	40.50	1029	6.48	165
100	2540	90.40	2296	117.60	2987	45.00	1143	7.20	183
110	2794	99.44	2526	129.36	3286	49.50	1257	7.92	201
120	3048	108.48	2755	141.12	3584	54.00	1372	8.64	219
130	3302	117.52	2985	152.88	3883	58.50	1486	9.36	238
140	3556	126.56	3215	164.64	4182	63.00	1600	10.08	256
150	3810	135.60	3444	176.40	4481	67.50	1715	10.80	274
200	5080	180.80	4592	235.20	5974	90.00	2286	14.40	366
250	6350	226.00	5740	294.00	7468	112.50	2858	18.00	457
300	7620	271.20	6888	352.80	8961	135.00	3429	21.60	549

Note:

- These figures are for reference purposes only when setting up the projector.
- For optimal results, test the projector's image size and distance before permanent installation.

Mounting the Projector

When mounting the projector:

- For optimal compatibility, please use a ViewSonic mount.
- When using a third-party mount, please note that screw sizes may vary depending on the mounting plate thickness.
- Use screws that meet the below specifications to ensure a secure attachment.

Screw Type	Maximum Screw Length
M4 x 8	8 mm

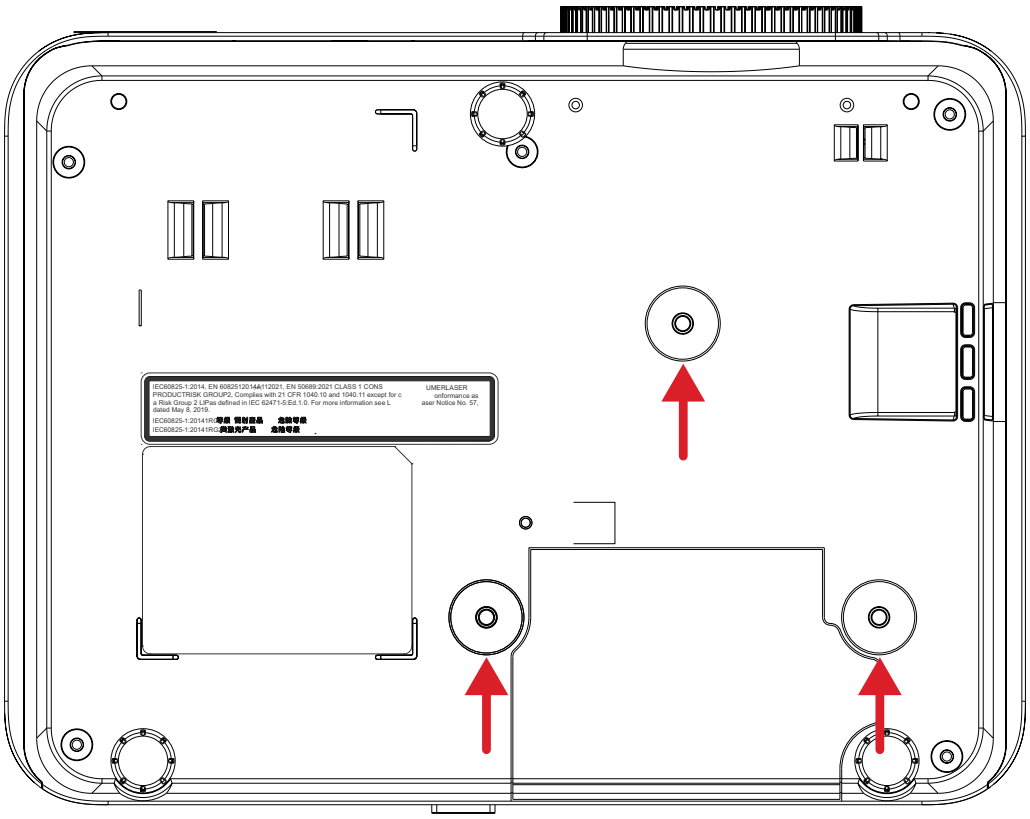

Important: Do not install the projector near a heat source or air conditioner.

Using the Security Bar

To help prevent the projector from falling or being stolen, use a locking device to secure the projector to a fixed object.

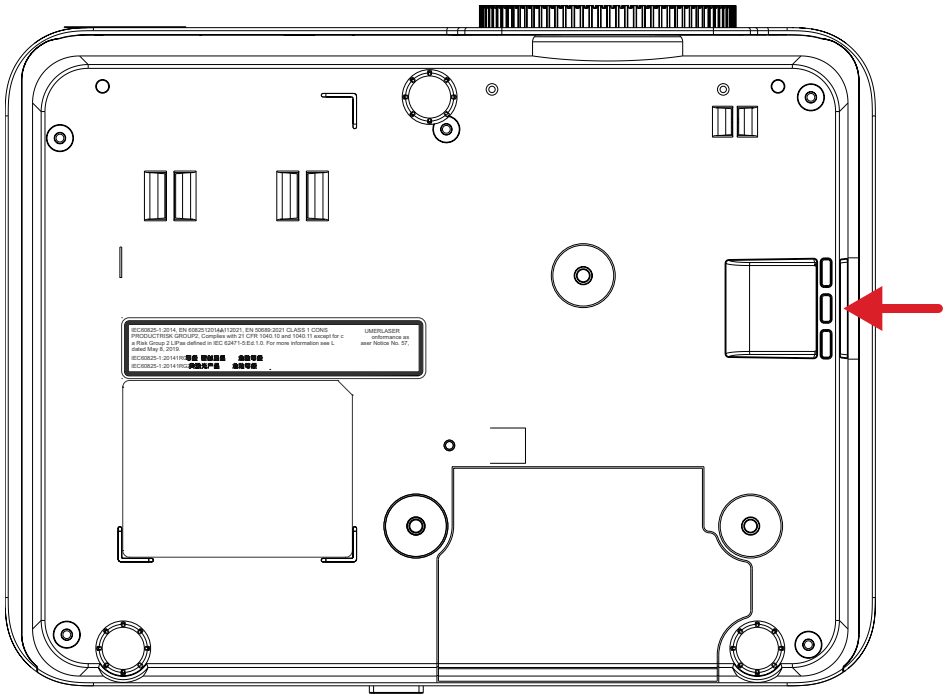

Making Connections

Connecting to Power

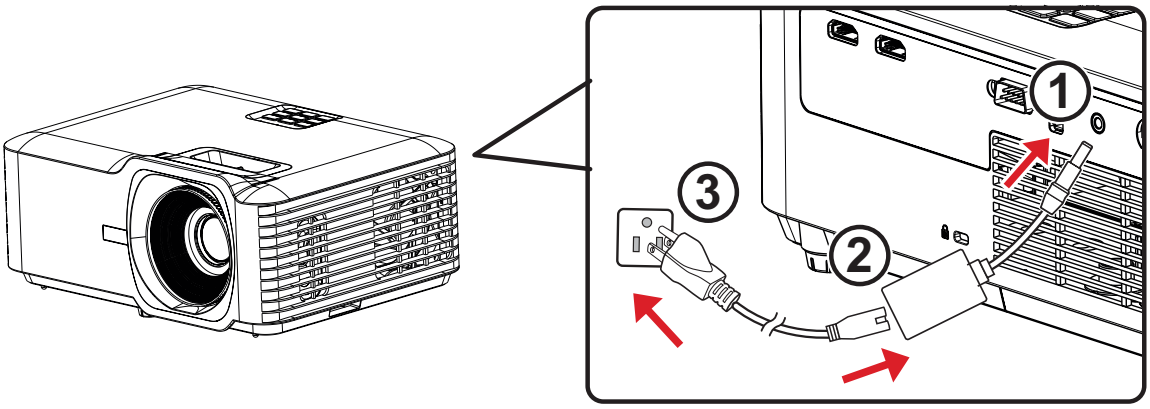

1. Connect the power adapter to the **DC IN** jack at the rear of the projector.
2. Connect the power adapter to the power cord.
3. Plug the power cord into a power outlet.

Note: When installing the projector, place a convenient disconnect device in the wiring or connect the power cord to an easily accessible outlet. In case of any issues, use this device or unplug the power cord to shut off the power supply immediately.

Connecting to External Devices

Note:

- For more information about the connection ports, please refer to “I/O Ports”.
- Compatibility and connectivity may differ between models.
- The **Control** port is only available on the LSD401HD projector.
- The **HDMI 1** and **HDMI 2** ports support HDMI 2.0/HDCP 2.2.

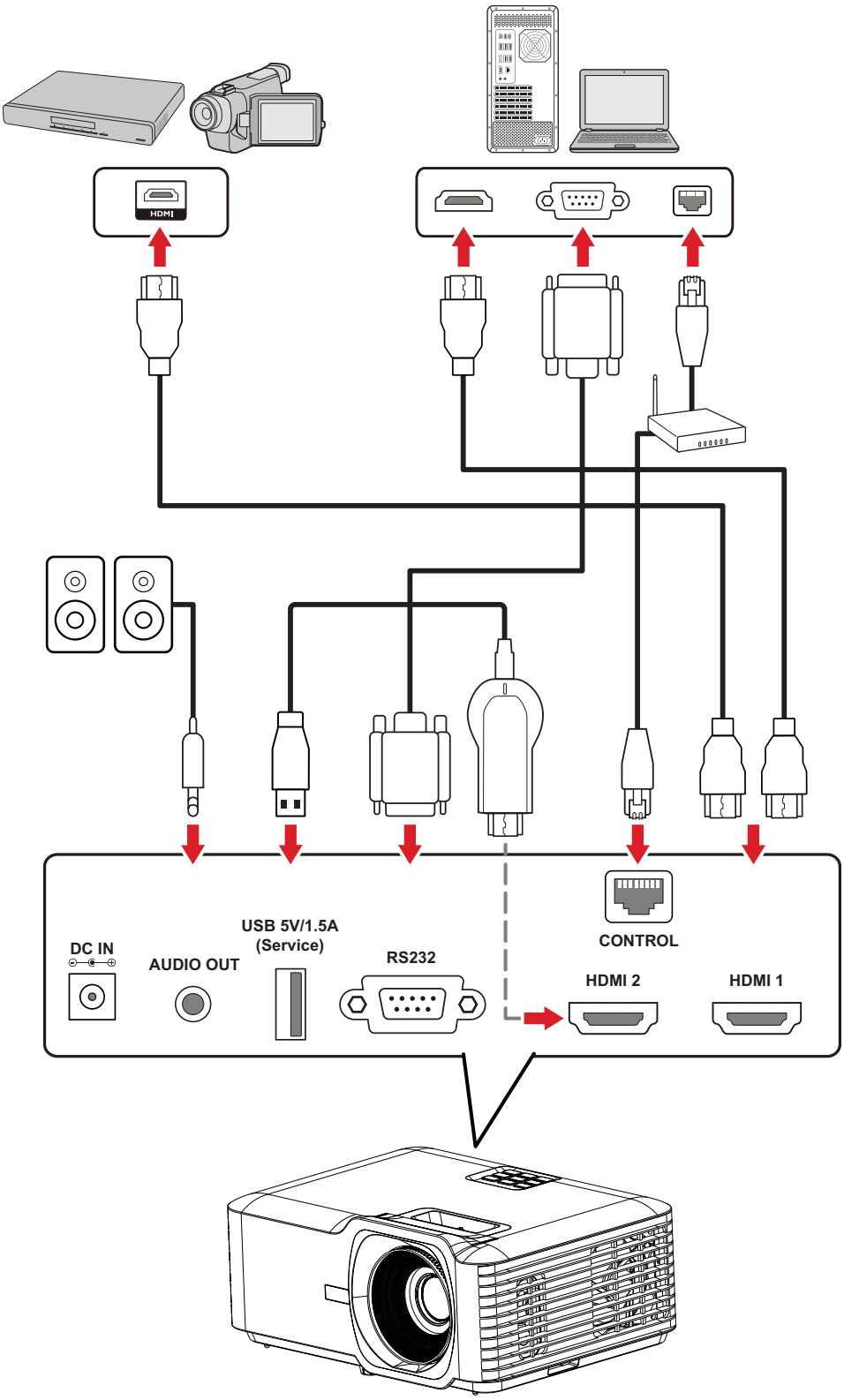

Using the Projector

Turning the Projector On

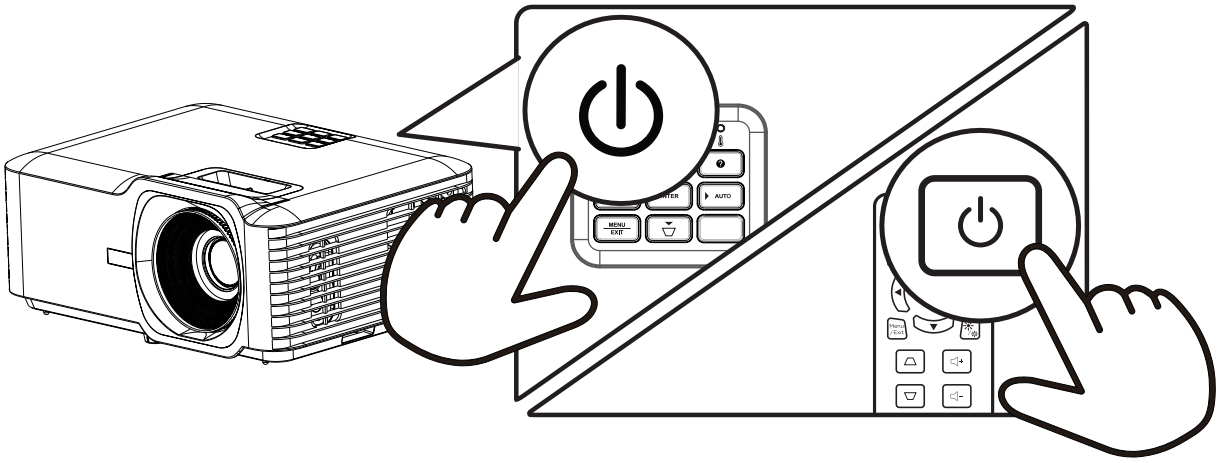

1. Make sure the projector's power cord is connected to a power outlet.
2. Press the **Power** button to turn on the projector. The Power Indicator Light will be flashing blue.

   Note: If the projector is turned on for the first time or reset to factory defaults, the On-Screen Display Menu's language and projector projection position will need to be set before using the projector.

Turning the Projector Off

1. Press the **Power** button and a dialog will appear.
2. Press the **Power** button again to confirm and turn off the projector. The Power Indicator Light will be solid red and enter standby mode.

Selecting an Input Source

The projector supports multiple connections, but can only display one full-screen image at a time. When **Auto Source** is turned on, it automatically detects available inputs. To manually switch between sources, press the **Source** button.

Note: Make sure the connected sources are also turned on.

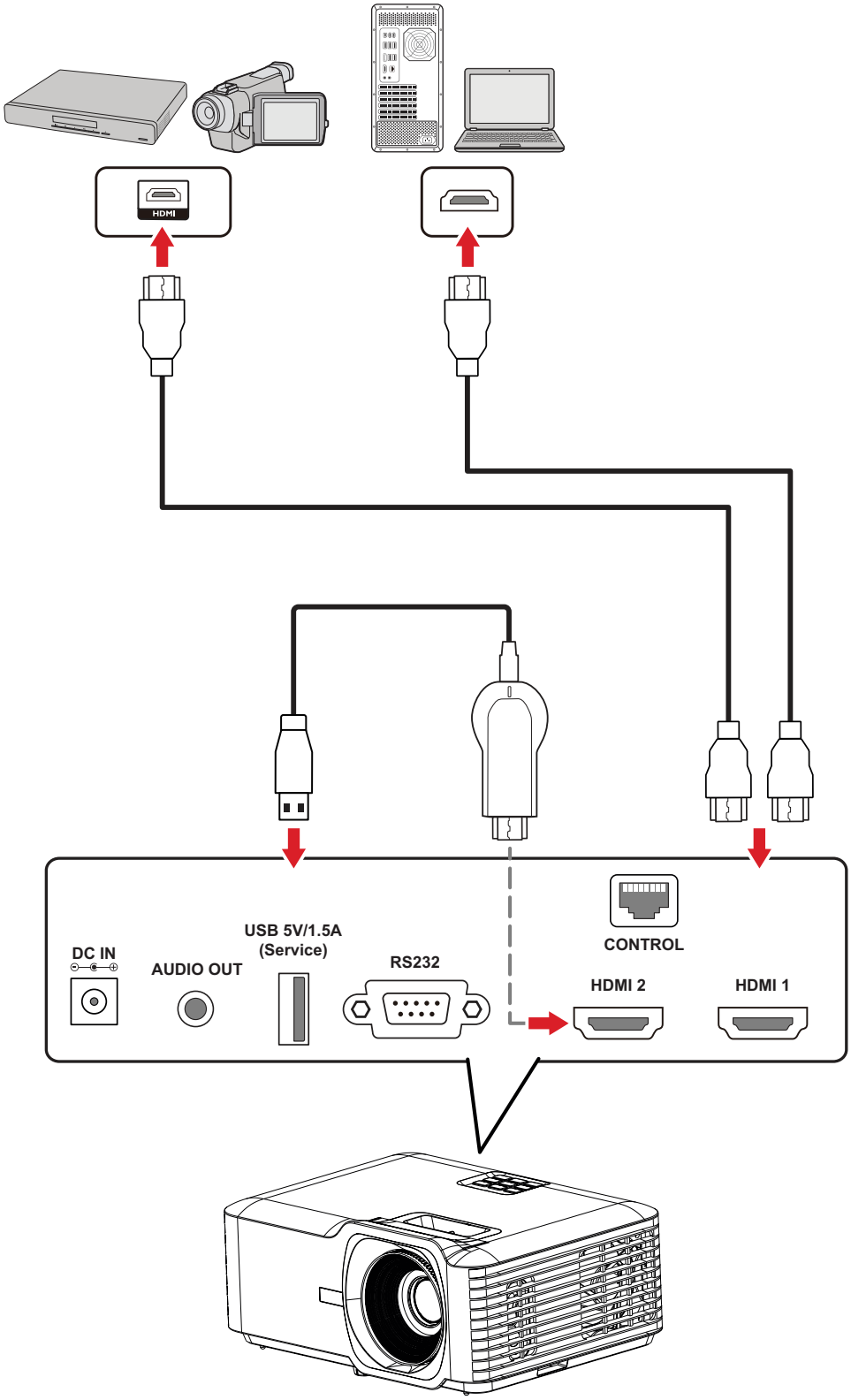

Adjusting the Projected Image

Projection Angle

The projector has three adjustable feet. Adjusting the feet will change the projector's projection angle.

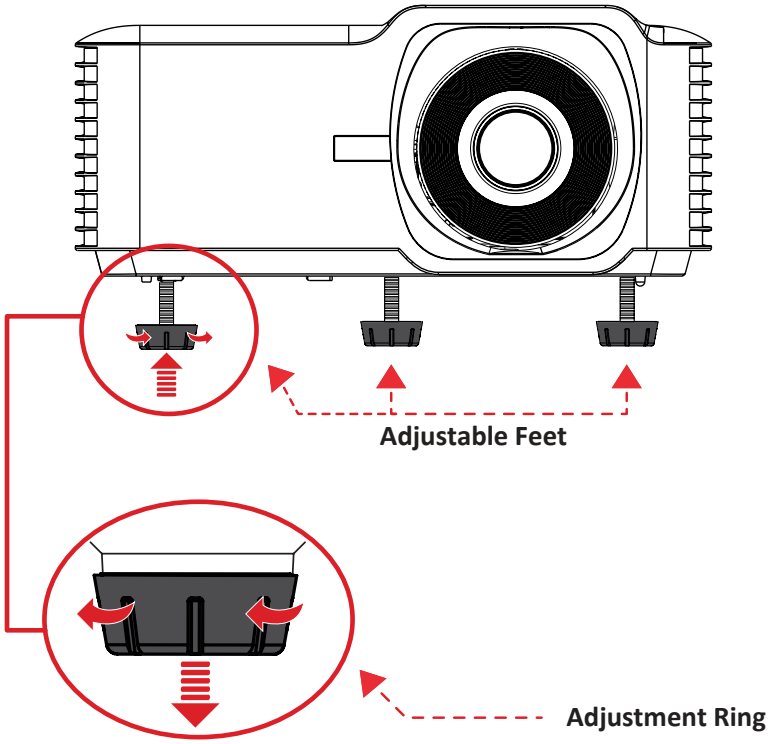

Image Size and Clarity

To adjust the projected image's size, turn the **Zoom Ring**. Image clarity can be improved by fine-tuning the **Focus Ring**.

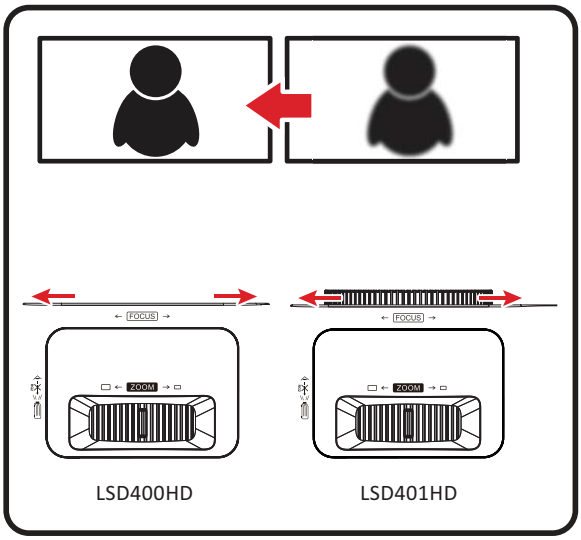

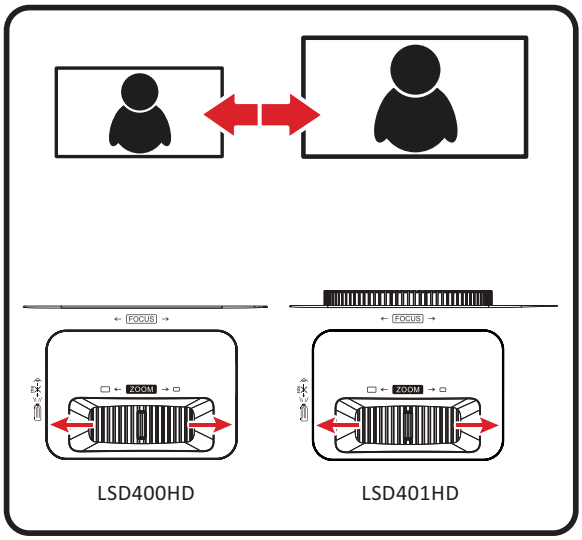

Correcting Keystone

The keystone effect causes distorted images on curved surfaces. This can be corrected by aligning images to appear as straight and rectangular.

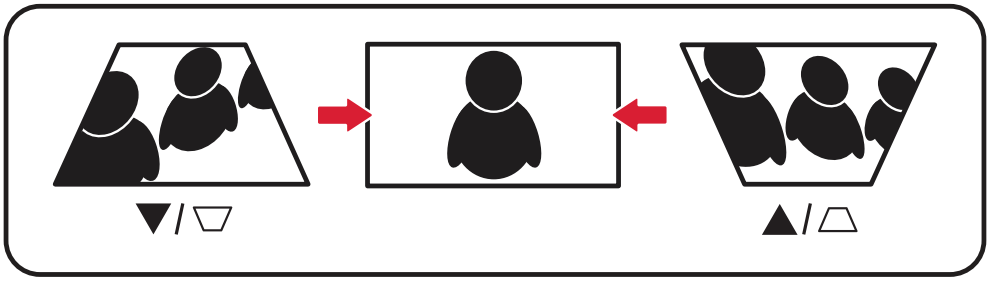

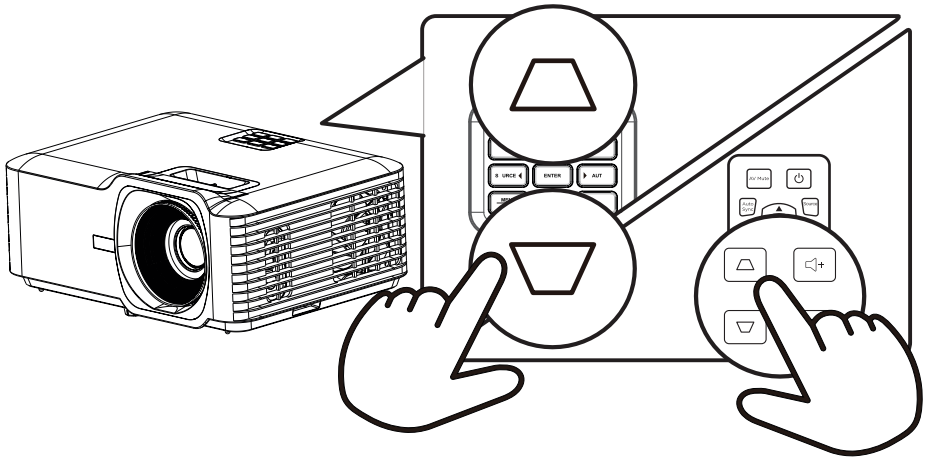

To correct keystoning

1. Press one of the **Keystone** buttons to display the correction screen.
2. Press the appropriate **Keystone** button for adjustment.

Button	Usage
▽	Corrects keystoning at the bottom of the image.
△	Corrects keystoning at the top of the image.

Menu Operation

On-Screen Display Menu

The projector has on-screen display menus for making image adjustments and changing settings.

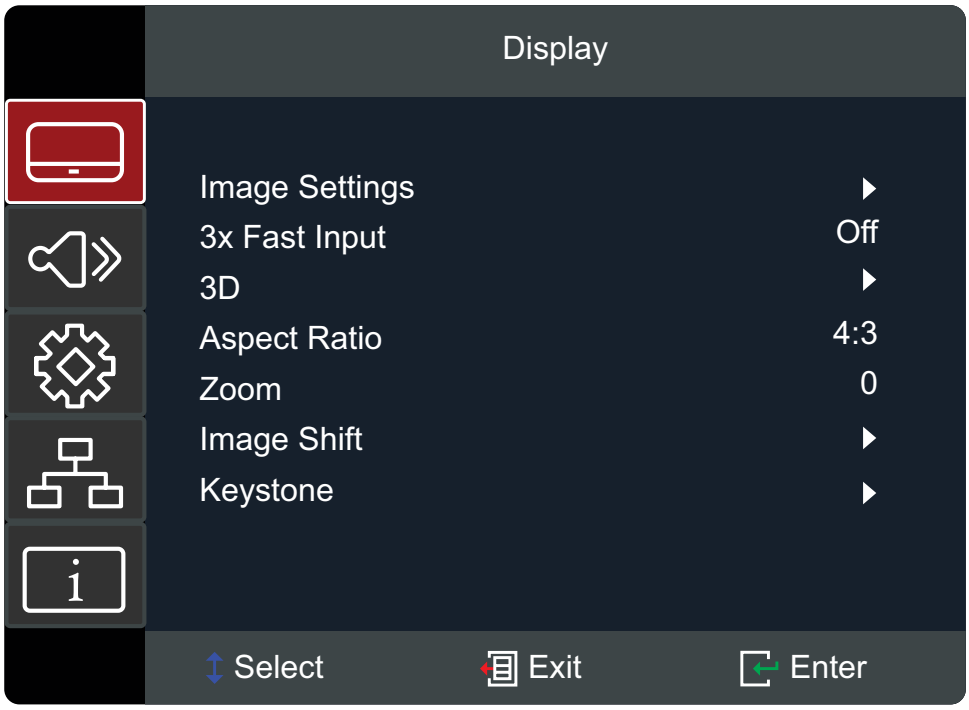

Menu		Description
Display		Adjusts Image, 3D, Aspect Ratio, Zoom, Image Shift, and Keystone settings.
Audio		Adjusts the volume level or mute.
Setup		Adjusts Projection, Power, Security, Language, etc. settings.
Network[1]		Adjusts LAN control settings.
Information		Shows the projector's current status.

1 – For LSD401HD only.

Menu Navigation

1. To open the On-Screen Display Menu, press the **Menu/Exit** button on the projector or the remote control.
2. Press the **Navigation** (↑/↓) buttons to select a main menu, then press the **Enter** button to confirm the selection and enter the sub-menu.
3. Press the **Navigation** (↑/↓/←/→) buttons to select an item in the sub-menu, then press the **Enter** button to view further settings or press the **Navigation** (←/→) buttons to make adjustments.
4. To exit the menu, press the **Menu/Exit** button.

Menu Options

Display

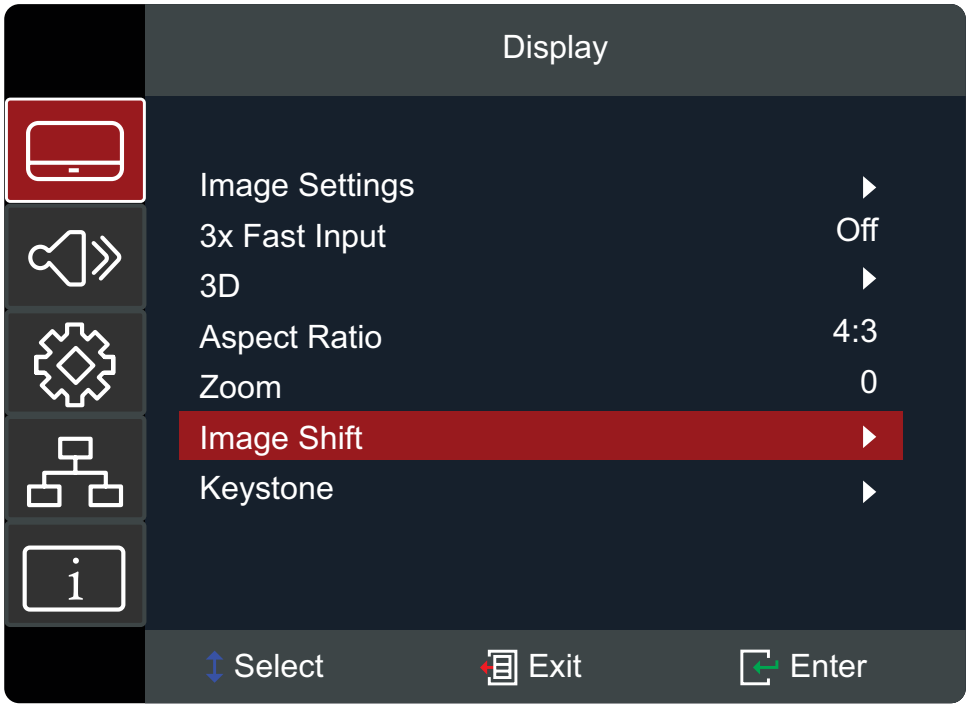

Menu	Description		
Image Settings	Color Mode	Presentation	Meets the presenting demands of professional and academic settings.
		Brightest	Adjusts the projected image's brightness to maximum for well-lit settings.
		HDR SIM.	The projector supports HDR imaging sources. It can automatically detect the dynamic range of the source, and optimize image gamma and color settings to reproduce contents under wide range of light conditions.
		Movie	Provides a balance of detail and colors for watching movies.
		Gaming	Optimizes the projector for maximum contrast and vivid colors.
		3D	Supports 3D content.
		Golf	Meets golf simulator demands.

Menu	Description		
Image Settings	Brightness	Adjusts how bright or how dark the projected image will be.	
	Contrast	Adjusts the difference between the brightest and darkest parts of the projected image.	
	Sharpness	Adjusts the projected image's details.	
	Color	Adjusts the amount of the selected color present in the projected image.	
	Tint	Adjusts the amount of the red or green tone in the projected image.	
	Gamma	Adjusts the brightness level of the projector's grayscale levels.	
	Color Settings	Brilliant Color™	A color-processing algorithm that allows for higher brightness levels while providing true, more vibrant colors.
		Color Temperature	Selects a color temperature: Warm, Standard, or Cold.
		Color Management	Fine-tunes the colors (**Hue**), purity (**Saturation**), and brightness/white-temperature (**Gain**) in the projected image.
		Color Space	Selects a color space: Auto, RGB (0–255), RGB (16–235), or YUV.
	Light Source Mode	Dynamic Black	Adjusts the picture brightness automatically to give optimum contrast performance.
		Eco	Reduces light source power consumption by 30% and lowers the brightness level.
		Light Source Power	Sets the light source power consumption manually, 50%–100%.
	Reset	Returns the **Image Settings** settings to their default values.	
3X Fast Input	Reduces the input delay/lag to the projector. **Note:** When turned on, **Keystone**, **Four Corners**, **Aspect Ratio**, and **Zoom In/Out** will be reset to their default values.		

Menu	Description		
3D[2]	3D Mode	Turns on or off the 3D function.	
	3D Format	Auto	Selects the appropriate 3D format automatically when a 3D signal is detected.
		SBS	Displays two images side-by-side, one for the left eye and one for the right eye.
		Top and Bottom	Displays the left eye image at the top and the right eye image at the bottom.
		Frame Sequential	Alternates between the left and right eye rapidly.
	3D Sync Invert	Inverts the synchronization signal sent by 3D devices.	
Aspect Ratio	4:3	Centers a scaled image on the screen with a fixed 4:3 aspect ratio.	
	16:9	Centers a scaled image on the screen with a fixed 16:9 aspect ratio.	
	Full	Preserves the original resolution of the input signal while resizing it to fit the display area, maintaining its full native dimensions.	
	L.Box	Centers a scaled image on the screen with a fixed 2.35:1 aspect ratio.	
	Auto	Sets the aspect ratio according to the projector's resolution setting and connected input signal.	
Zoom	Adjusts the projected image's size.		
Image Shift	Adjusts the projected image horizontally or vertically.		
Keystone	Four Corners	Adjusts each corner to make a square image when the projection surface is not level. **Note:** When adjusting, the **Aspect Ratio**, **Image Shift**, and **Zoom** menus will be turned off. To turn them on, reset the **Keystone** settings to their default values.	
	H. Keystone	Adjusts image distortion horizontally.	
	V. Keystone	Adjusts image distortion vertically.	
	Reset	Returns the **Keystone** settings to their default values.	

2 – This projector is a 3D ready projector with DLP-Link 3D. Please make sure your 3D glasses are for DLP-Link 3D. This projector supports Blue-ray 3D and frame sequential (page-flip) 3D via the HDMI 1/HDMI 2 ports. For the best performance, 1920 x 1080 resolution is recommended. Please note that 4K (3840 x 2160) resolution is not supported in 3D mode.

Audio

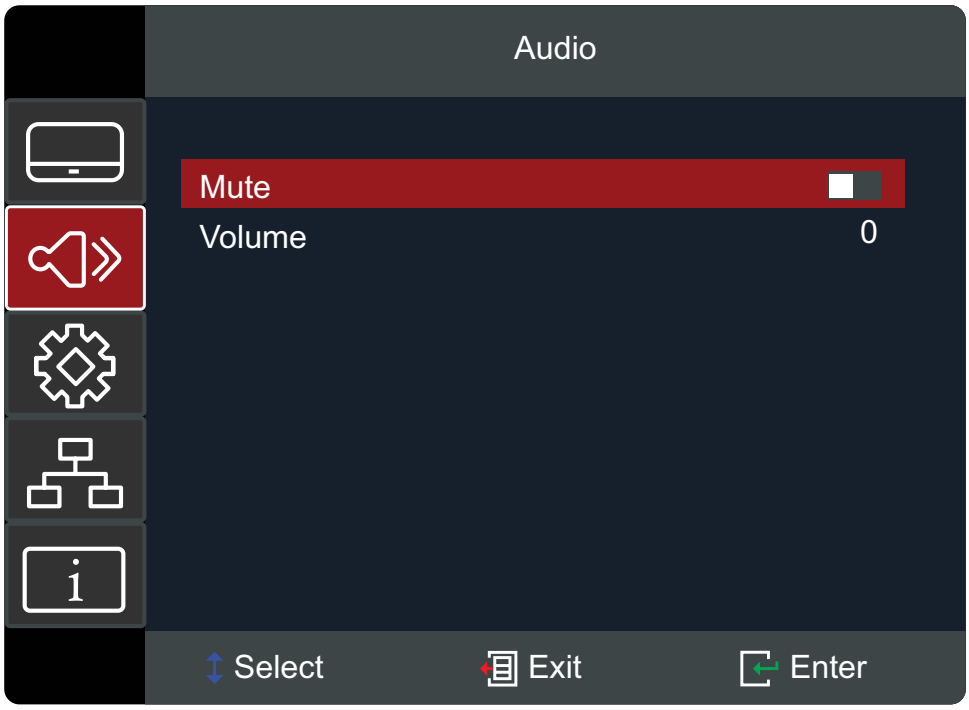

Menu	Description
Mute	Stops audio output.
Volume	Adjusts the volume level.

Setup

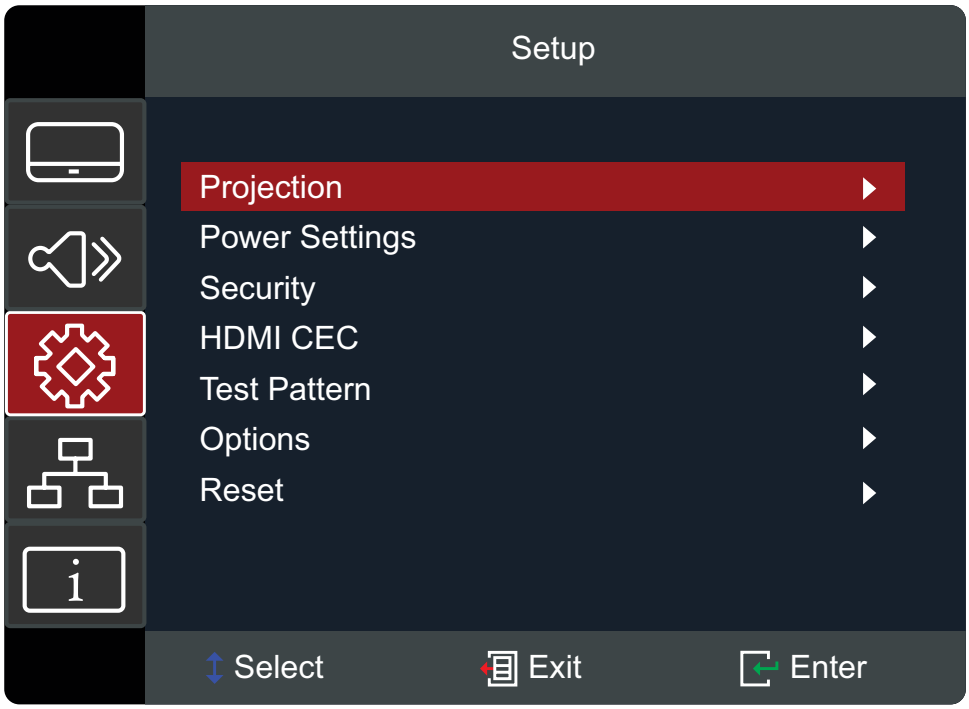

Menu	Description
Projection	Sets the projector position.

<table>
<tr><th>Menu</th><th colspan="2">Description</th></tr>
<tr><td rowspan="7">Power Settings</td><td>Direct Power On</td><td colspan="2">Turns on the projector automatically when power is supplied.</td></tr>
<tr><td>Signal Power On</td><td colspan="2">Turns on the projector automatically when an input signal is detected.</td></tr>
<tr><td>Auto Power Off (min.)</td><td colspan="2">Turns the projector off automatically after a set period of time once no input signal is detected.
Note: A notification will appear when turned off.
COMMISION REGULATION (EU) 2023/826
Disabling this function will increase energy consumption.</td></tr>
<tr><td rowspan="4">Power Mode[3] (Standby)</td><td>Eco</td><td>Reduces power consumption to < 0.5W. Network control is not supported.</td></tr>
<tr><td>Active</td><td>Sets power consumption to > 0.5W, allowing the LAN module to enter sleep mode (< 0.5W) within 20 minutes. Wake on LAN (WoL) is not supported.</td></tr>
<tr><td>ErP Off</td><td>Powers network ports continuously, allowing network functionality in standby mode.</td></tr>
<tr><td colspan="2">Note:
• No power is supplied to the USB port when in standby mode.
• To allow network functionality in standby mode, select ErP Off.
• A notification will appear when turned off.
COMMISION REGULATION (EU) 2023/826
Disabling this function will increase energy consumption.</td></tr>
<tr><td rowspan="3">Security</td><td>Power On Lock</td><td colspan="2">Sets a password requirement after turning on the projector.</td></tr>
<tr><td>Security Timer</td><td colspan="2">Specifies how long the projector can be used. Once this time has expired, the security password will need to be entered again.</td></tr>
<tr><td>Change Password</td><td colspan="2">Sets or updates the password.</td></tr>
</table>

3 – For LSD401HD only.

<table>
<tr><th>Menu</th><th colspan="3">Description</th></tr>
<tr><td>HDMI CEC</td><td colspan="3">Turns on or off HDMI CEC-compatible devices connected to the projector with a single button press.
Note:
• For the CEC function to work, make sure that the device is properly connected to the HDMI input of the projector, and its CEC function is turned on.
• Depending on the connected device, the CEC function may not work.</td></tr>
<tr><td>Test Pattern</td><td colspan="3">Sets a color pattern to calibrate the projector.</td></tr>
<tr><td rowspan="7">Options</td><td>Language</td><td colspan="2">Sets the language for the On-Screen Display Menu.</td></tr>
<tr><td>Auto Source</td><td colspan="2">Searches automatically for an available input signal.</td></tr>
<tr><td>High Altitude</td><td colspan="2">When turned on, the fan speed will increase for better cooling and performance. It is recommended for environments 1,500-3,000 m (4,921-9843 ft) above sea level.</td></tr>
<tr><td>Keypad Lock</td><td colspan="2">Locks the projector’s keypad buttons.</td></tr>
<tr><td rowspan="2">Splash Screen</td><td>Default</td><td>Sets the startup logo image as ViewSonic.</td></tr>
<tr><td>User</td><td>Uses the “splash tool” to change the startup logo image.</td></tr>
<tr><td>Baud Rate</td><td colspan="2">Sets the baud rate to match the connected computer for RS-232 control of the projector.</td></tr>
<tr><td>Reset</td><td colspan="3">Returns the Setup settings to their default values.</td></tr>
</table>

Network

Note: Only available for the LSD401HD projector.

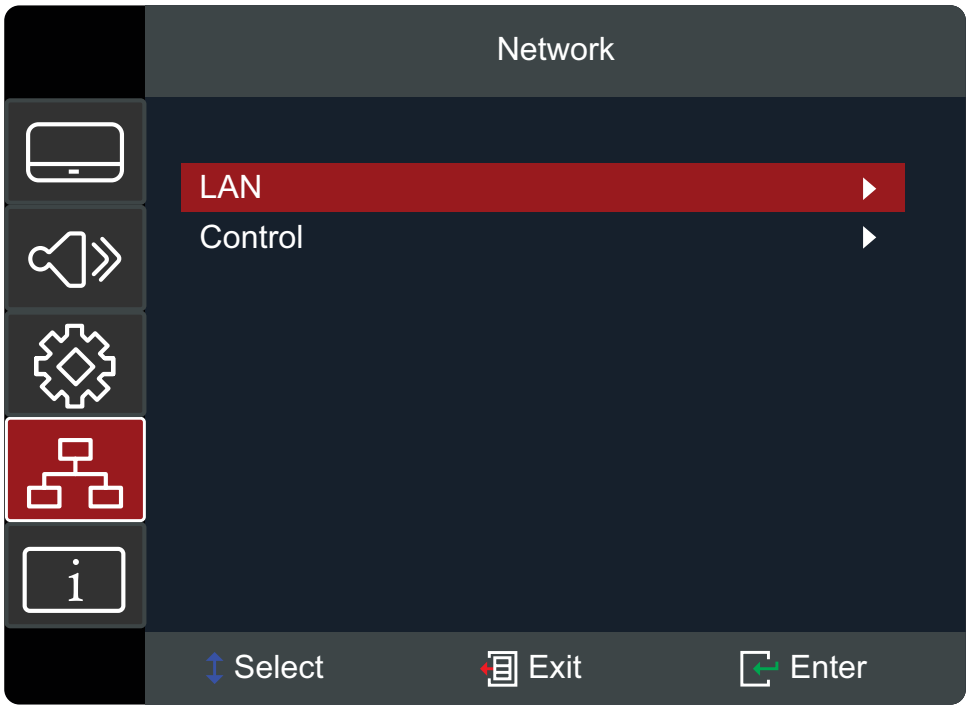

Menu	Description
LAN	Sets the projector's network information and shows its status.
Control	Selects which network control solutions to turn on or off. 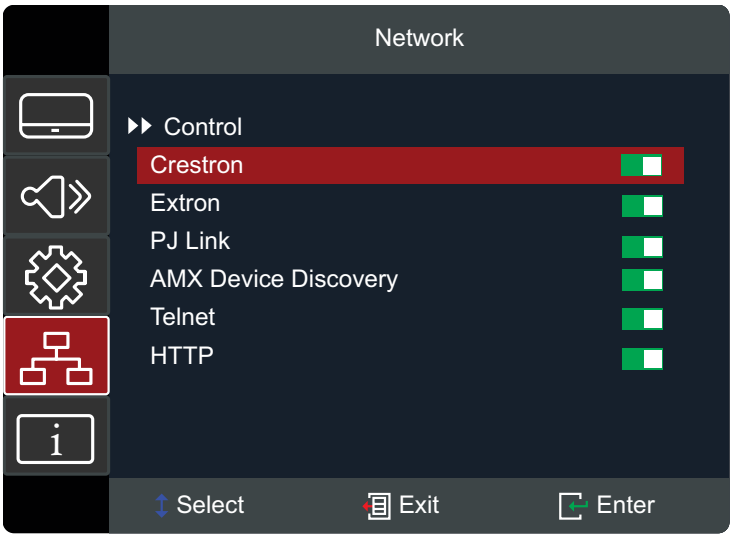

Controlling the Projector through a Network

Note: Only available for the LSD401HD projector.

The projector is compatible with network control software and can be controlled remotely by web browser once connected to the same local area network as a computer.

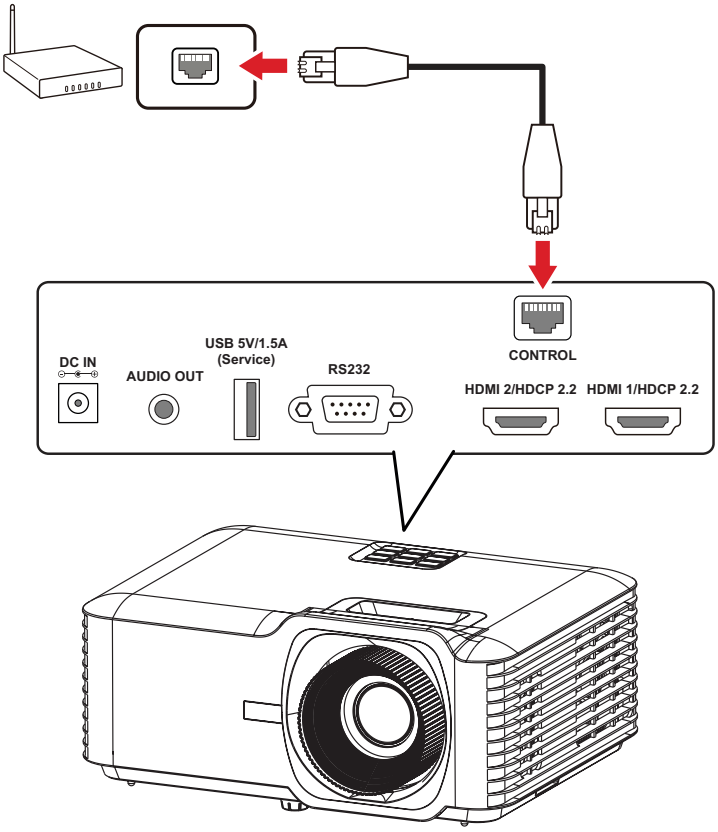

To control the projector through a network

1. Make sure the projector is connected to the local network via the RJ45 port.
2. Press **Menu/Exit** button to open the On-Screen Display Menu, then navigate to **Network** > **LAN**.
3. Select **DHCP** and turn it on for automatic IP address assignment, or turn it off to manually enter the network information.
4. Press the **Menu/Exit** button to exit the **LAN** menu.
5. Wait for approximately 20 seconds, then select **LAN** and press the **Enter** button. Make a note of the IP address listed (**IP Address**).

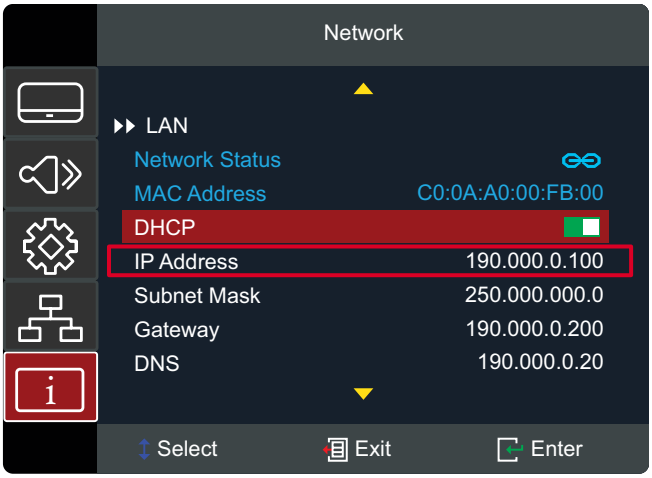

6. Open a web browser on a computer connected to the same network and enter the projector's IP address. Enter the user name and password, then select **Log in**.

   Note: During your first log in, follow the on-screen instructions to set a password. This will enable subsequent log ins.

Information

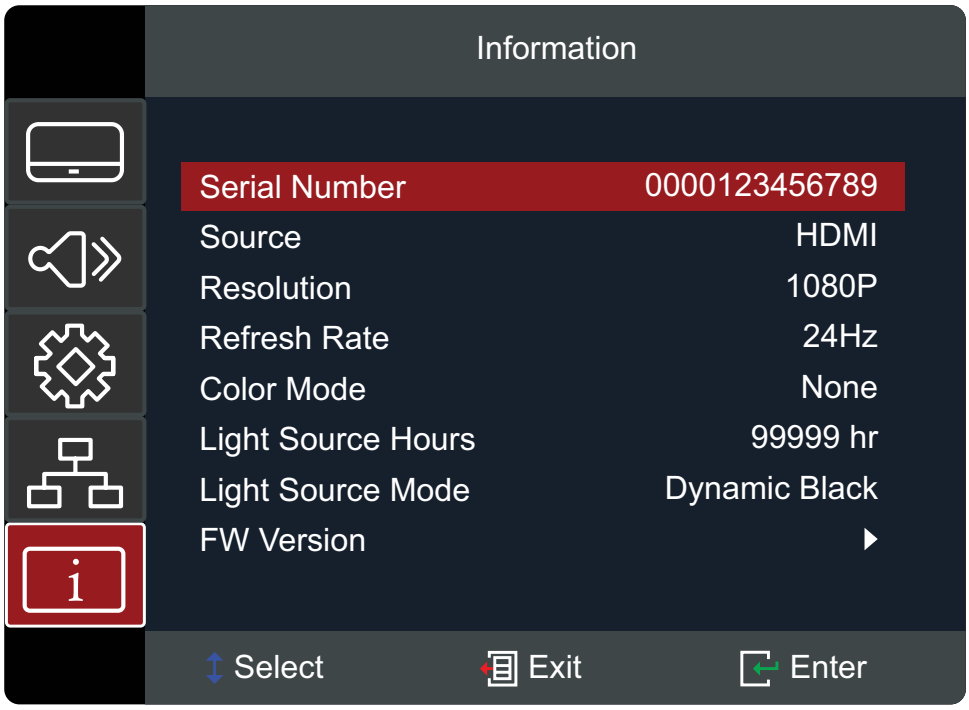

Menu	Description
Serial Number	Shows the projector's serial number.
Source	Shows the current input signal.
Resolution	Shows the current resolution.
Refresh Rate	Shows the current refresh rate.
Color Mode	Shows the selected mode in the **Display** menu.
Light Source Hours	Shows the total usage hours of the light source.
Light Source Mode	Shows the selected mode in the **Display** menu.
FW Version	Shows the current firmware version.

Appendix

Specifications

Item	Category	Specification	
		LSD400HD	LSD401HD
Projector	Type	Laser	
	Display Size	30 in.–300 in.	
	Throw Ratio	1.48–1.62±3% (100 in. @ 3.28 m)	1.13–1.47±3% (100 in. @ 2.50 m)
	Optical Zoom	1.1x	1.3x
	Light Source Type	Laser Phosphor	
	Display System	1-CHIP DMD	
Input Signal	HDMI	f_h: 15–135 kHz, f_v:24–120 Hz, Pixel rate: 600 MHz	
Resolution	Native	1920 x 1080	
Power	Input Voltage	DC 100-240V, 50/60 Hz (Auto Switch)	
Operating Conditions	Altitude	0 m–762 m at 0°C–40°C	
		0 ft–2,500 ft at 32°F–104°F	
		762 m –1,524 m at 0°C–35°C	
		2,500 ft–5,000 ft at 32°F–95°F	
		1,524 m–3,657.6 m at 0°C–30°C	
		5,000 ft–12,000 ft at 32°F–86°F	
	Relative Humidity	10%–80% (non-condensing)	
	Temperature	0°C–40°C	
		32°F–104°F	
Storage Conditions	Altitude	0 km–12.1 km	
		0 ft–40,000 ft	
	Relative Humidity	5%–90% (non-condensing)	
	Temperature	-20°C–60°C	
		-4°F–140°F	
Dimensions	Physical (W x H x D)	286 mm x 129 mm x 216 mm	
		11.26 in. x 5.08 in. x 8.50 in.	
Weight	Physical	3.0 kg	
		6.61 lb	
Power Consumption	On[1]	143W (Typical)	
	Off	< 0.5W (Standby)	

1 – The test conditions follow EEI standards.

Projector Dimensions

LSD400HD

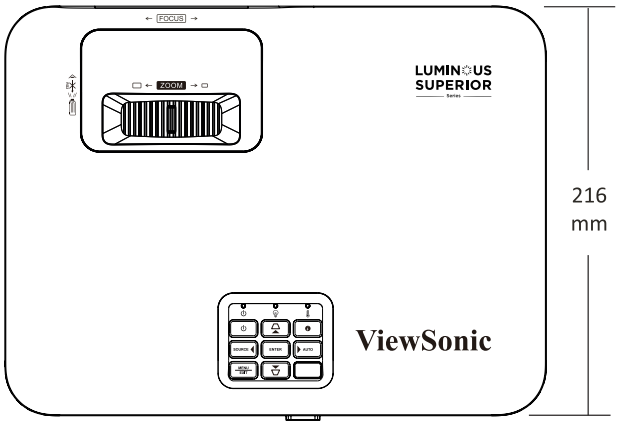

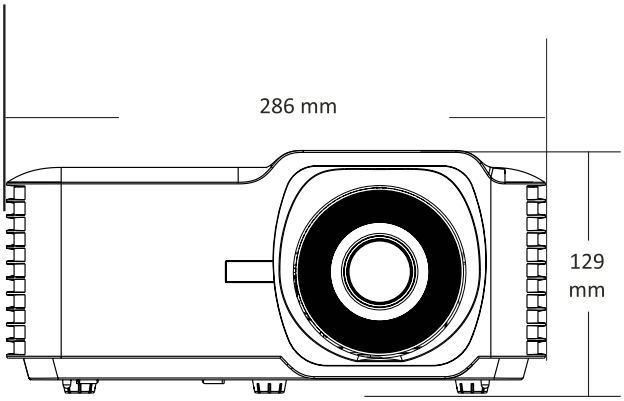

LSD401HD

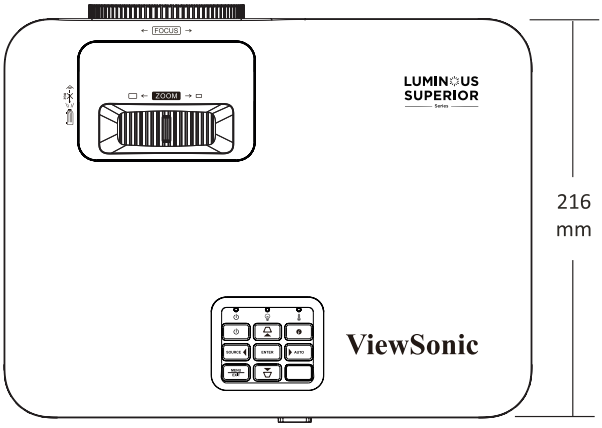

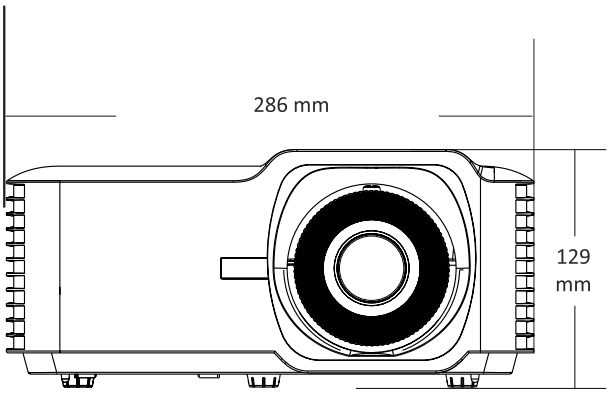

On-Screen Display Menu Tree

Main Menu	Sub-menu	Menu Option			
Display	Image Settings	Color Mode	Presentation		
			Brightest		
			HDR SIM.		
			Movie		
			Gaming		
			3D		
			Golf		
		Brightness	(-/+, -50–50)/1		
		Contrast	(-/+, -50–50)/1		
		Sharpness	(-/+, 1–15)/1		
		Color	(-/+, -50–50)/1		
		Tint	(-/+, -50–50)/1		
		Gamma	Film		
			Video		
			Graphics		
			Standard (2.2)		
		Color Settings	Brilliant Color™	(-/+, 1–10)/1	
			Color Temperature	Warm	
				Standard	
				Cold	
			Color Management	Color	Red
					Green
					Blue
					Cyan
					Yellow
					Magenta
					White
				Hue/R	(-/+, -50–50)/1
				Saturation/G	(-/+, -50–50)/1
				Gain/B	(-/+, -50–50)/1
				Reset	
				Exit	

Main Menu	Sub-menu	Menu Option			
Display	Image Settings	Color Settings	Color Space	Auto	
				RGB (0–255)	
				RGB (16–235)	
				YUV	
		Light Source Mode	Dynamic Black		
			Eco		
			Light Source Power 100%–50%		
		Reset			
	3X Fast Input	Active			
		Inactive			
	3D	3D Mode	Off		
			On		
		3D Format	Auto		
			SBS		
			Top and Bottom		
			Frame Sequential		
		3D Sync Invert	Off		
			On		
	Aspect Ratio	4:3			
		16:9			
		Full			
		L.Box			
		Auto			
	Zoom	(-/+, -5–25)/1			
	Keystone	Four Corners	Top-Left		
			Top-Right		
			Bottom-Left		
			Bottom-Right		
		H. Keystone	(-/+, -30–30)/1		
		V. Keystone	(-/+, -30–30)/1		
		Reset			
Audio	Mute	Off			
		On			
	Volume	(-/+, 0–10)/1			

Main Menu	Sub-menu	Menu Option		
Setup	Projection	Front		
		Rear		
		Ceiling-Top		
		Rear-Top		
	Power Settings	Direct Power On	Off	
			On	
		Signal Power On	Off	
			On	
		Auto Power Off (min.)	(-/+, 0–180)/5 minutes	
		Power Mode (Standby)[2]	Eco	
			Active	
			ErP Off	
	Security	Power On Lock	Off	
			On	
		Security Timer	Month	
			Day	
			Hour	
		Change Password		

2 – For LSD401HD only.

Main Menu	Sub-menu	Menu Option		
Setup	HDMI CEC	HDMI CEC	Off	
			On	
	Test Pattern	Test Pattern	Off	
			Green Grid	
			Magenta Grid	
			White Grid	
			White	
			Test Card	
	Options	Language	English	
			Deutsch	
			Français	
			Italiano	
			Español	
			Português	
			Polski	
			Nederlands	
			Svenska	
			Norsk	
			Suomi	
			ελληνικά	
			繁體中文	
			簡体中文	
			日本語	
			한국어	
			Русский	
			Čeština	
			عربي	
			ไทย	
			Türkçe	
			Tiếng Việt	
			Bahasa Indonesia	

Main Menu	Sub-menu	Menu Option		
Setup	Options	Auto Source	Off	
			On	
		High Altitude	Off	
			On	
		Keypad Lock	Off	
			On	
		Splash Screen	Default	
			User	
		Baud Rate	115200	
			9600	
	Reset	Reset to Default		
Network[3]	LAN	Network Status		
		MAC Address		
		DHCP	Off	
			On	
		IP Address	xxx.xxx.xxx	
		Subnet Mask	xxx.xxx.xxx	
		Gateway	xxx.xxx.xxx	
		DNS	xxx.xxx.xxx	
		Reset		
	Control	Crestron	Off	
			On	
		Extron	Off	
			On	
		PJ Link	Off	
			On	
		AMX Device Discovery	Off	
			On	
		Telnet	Off	
			On	
		HTTP	Off	
			On	

3 – For LSD401HD only.

Main Menu	Sub-menu	Menu Option	
Information	Serial Number		
	Source		
	Resolution		
	Refresh Rate		
	Color Mode		
	Light Source Hours		
	Light Source Mode		
	FW Version	System	
		LAN[4]	
		MCU	

4 – For LSD401HD only.

Supported Resolutions and Timings

HDMI 1 | HDMI 2

PC Signal

Signal	Resolution	Refresh Rate
VGA	640 x 480	60, 72, 75 Hz
	720 x 400	70 Hz
SVGA	800 x 600	56, 60, 72, 75 Hz
	832 x 624	75 Hz
XGA	1024 x 768	60, 70, 75, 120 Hz
PowerBook G4	1152 x 870	75 Hz
WXGA	1280 x 720	60, 120 Hz
	1280 x 800	60 Hz
	1366 x 768	60 Hz
	1440 x 900	60 Hz
SXGA	1280 x 1024	60, 75 Hz
	1400 x 1050	60 Hz
UXGA	1600 x 1200	60 Hz
	1920 x 1080	60 Hz

Video Signal

Signal	Resolution	Refresh Rate
SDTV (480i)	720 x 480	60 Hz
SDTV (480p)	640 x 480	60 Hz
	720 x 480	60 Hz
SDTV (576i)	720 x 576	50 Hz
SDTV (576p)	720 x 576	50 Hz
HDTV (720p)	1280 x 720	50, 60 Hz
HDTV (1080i)	1920 x 1080	50, 60 Hz
HDTV (1080p)	1920 x 1080	24, 25, 30, 50, 60, 120 Hz
UHD (2160p)	3840 x 2160	24, 25, 30, 50, 60 Hz
	4096 x 2160	24, 25, 30, 50, 60 Hz

3D

Signal	Resolution	Refresh Rate
Frame Packing		
720p	1280 X 720	50, 60 Hz
1080p	1920 X 1080	24 Hz
Side-by-Side		
1080i	1920 x 1080	50, 60 Hz
Top-and-Bottom		
720p	1280 x 720	50, 60 Hz
1080p	1920 x 1080	24 Hz

Note:

- 1080i @ 25 Hz and 720p @ 50 Hz will run in 100 Hz; other 3D timing will run in 120 Hz.
- 1080p @24 Hz will run in 144 Hz (XGA, WXGA, 1080p)/96 Hz (WUXGA).
- If the input frame rate is 48 Hz or greater, the output frame rate is set to twice the input frame rate (FRC = 2X mode).
- If the 3D input frame rate is 25 Hz or greater, the output frame rate is set to four times the input frame rate (FRC = 4X mode).
- If the 3D input frame rate is 24 Hz (includes 23.9 Hz), the output frame rate is set to six times the input frame rate (FRC = 6X mode).

Troubleshooting

Projector does not turn on

Troubleshooting Checks	Yes/No	Possible Solutions
Is the Power Indicator lit?	Yes	Turn the projector off, then turn it back on.
	No	Check the power connection between the projector and the power outlet.
Is the power cord plugged into a power outlet?	Yes	Try another Power outlet or use some other electrical device to confirm the same power outlet is working.
	No	Plug the power cord into a power outlet and press the **Power** button on the projector's keypad or remote control.

No image appears

Troubleshooting Checks	Yes/No	Possible Solutions
Is your PC/video device turned on or in sleep mode?	Yes	Check the cable connection between your PC/video device and the projector.
	No	Turn your PC/video device on or wake it up from sleep mode. If in any doubts, consult your PC/video device's documentation.
Is the image input selected correctly?	Yes	Turn the projector off, then turn it back on.
	No	Select the correct input source. If multiple devices are connected, manually adjust the input source by pressing the Source Input button on the projector's keypad or remote control.

Image is flipped upside down or mirrored left to right

Troubleshooting Checks	Yes/No	Possible Solutions
Is the projector hung from the ceiling?	Yes	Check the **Ceiling-Top**/**Rear-Top** option.
	No	Turn the projector off, then turn it back on.
Is the projector placed on a desk/floor?	Yes	Check the **Front**/**Rear** option.
	No	Turn the projector off, then turn it back on.

Image is blurred

Troubleshooting Checks	Yes/No	Possible Solutions
Is the lens dirty?	Yes	Follow the procedure in the Maintenance section to clean the lens.
	No	Adjust the **Focus Ring** until the image is clear.

Image is not displayed correctly

Troubleshooting Checks	Yes/No	Possible Solutions
Is the image cut off, or not fitting on the screen?	Yes	Press the **Zoom In**/**Zoom Out** button on the remote control to return to the original image size. If the image is still not displayed correctly, reset the **Image Settings**.
	No	Reset the **Image Settings**.

Remote control does not work

Troubleshooting Checks	Yes/No	Possible Solutions
Are there any obstacles between the remote control and projector?	Yes	Remove the obstacle(s).
	No	Aim the remote control at the projector's IR receiver within the effective distance and angles when performing an operation. Related sections: • "Receiver Range"
Are the batteries installed correctly?	Yes	If the remote control still does not work, try another set of new batteries to confirm the current batteries have power.
	No	Install the batteries again. Related sections: • "Installing the Batteries"

Important

If a problem is still not solved or not listed here, follow the steps below to restart your projector.

1. Press the **Power** button on the projector's keypad or remote control to turn it off.
2. Unplug the power cord from the power outlet and wait for at least five minutes.
3. Plug the power cord back in.
4. Press the **Power** button to turn on the projector.

If normal operation does not resume after the projector restarts, contact your reseller or service center for assistance.

LED Indicators

Status and Description	⏻		🌡	💡
	Red	**Blue**	**Red**	**Red**
Standby State (Power Cord Input)	Steady			
Power On (Warming)		Flashing (0.5 sec. off/0.5 sec. on)		
Power On and Lamp Lighting		Steady		
Power Off (Cooling)	Flashing (0.5 sec. off/0.5 sec. on) Back to Steady after the cooling fan turns off			
Error (Lamp Failure)	Flashing			Steady
Error (Fan Failure)	Flashing		Flashing	
Error (Overheat)	Flashing		Steady	

Note: If normal operation does not resume, contact your reseller or service center for assistance.

Maintenance

General Precautions

- Before performing any maintenance, turn off the projector and unplug the power cord from the outlet.
- Do not spray or pour liquid directly onto the projector.
- Handle the projector with care, as scratches may be more visible on dark-colored models.

Cleaning the Lens

- Use an air blower to remove dust.
- Use lens-cleaning paper or a soft, moist cloth with lens cleaner to gently wipe away smudges from the lenses.

Important: Do not use abrasive materials or glass cleaner to clean the lens.

Cleaning the Case

- Clean with a soft, dry cloth.
- If the case is still not clean, apply a small amount of non-ammonia, non-alcohol based, mild non-abrasive detergent onto a clean, soft, lint-free cloth; then wipe the surface.

Important: Do not use wax, alcohol, benzene, thinner, or other chemical detergents for cleaning.

Storing the Projector

If the projector will not be used for an extended period of time, observe the following:

- Retract the adjustable foot completely.
- Remove the batteries from the remote control.
- Pack the projector in its original packaging.
- Store the projector in a location that falls within the projector's storage conditions.

Disclaimer

- ViewSonic® does not recommend the use of any ammonia or alcohol-based cleaners on the lens or case. Some chemical cleaners have been reported to damage the lens and/or case of the projector.
- ViewSonic® will not be liable for damage resulting from use of any ammonia or alcohol-based cleaners.

Regulatory and Service Information

Compliance Information

This section addresses all connected requirements and statements regarding regulations. Confirmed corresponding applications shall refer to nameplate labels and relevant markings on the unit.

FCC Compliance Statement

This device complies with part 15 of FCC Rules. Operation is subject to the following two conditions: (1) this device may not cause harmful interference, and (2) this device must accept any interference received, including interference that may cause undesired operation. This equipment has been tested and found to comply with the limits for a Class B digital device, pursuant to part 15 of the FCC Rules.

These limits are designed to provide reasonable protection against harmful interference in a residential installation. This equipment generates, uses, and can radiate radio frequency energy, and if not installed and used in accordance with the instructions, may cause harmful interference to radio communications. However, there is no guarantee that interference will not occur in a particular installation. If this equipment does cause harmful interference to radio or television reception, which can be determined by turning the equipment off and on, the user is encouraged to try to correct the interference by one or more of the following measures:

- Reorient or relocate the receiving antenna.
- Increase the separation between the equipment and receiver.
- Connect the equipment into an outlet on a circuit different from that to which the receiver is connected.
- Consult the dealer or an experienced radio/TV technician for help.

Warning: You are cautioned that changes or modifications not expressly approved by the party responsible for compliance could void your authority to operate the equipment.

Industry Canada Statement

This Class B digital apparatus complies with Canadian ICES-003.

Cet appareil numérique de classe B est conforme à la norme NMB-003 du Canada.

CAN ICES (B)/NMB (B)

CE Conformity for European Countries

The device complies with the EMC Directive 2014/30/EU and Low Voltage Directive 2014/35/EU. Ecodesign Directive 2009/125/EC.

The following information is only for EU-member states:

The mark shown to the right is in compliance with the Waste Electrical and Electronic Equipment Directive 2012/19/EU (WEEE). The mark indicates the requirement NOT to dispose of the equipment as unsorted municipal waste, but use the return and collection systems according to local law.

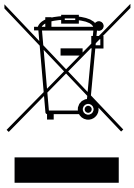

Declaration of RoHS2 Compliance

This product has been designed and manufactured in compliance with Directive 2011/65/EU of the European Parliament and the Council on restriction of the use of certain hazardous substances in electrical and electronic equipment (RoHS2 Directive) and is deemed to comply with the maximum concentration values issued by the European Technical Adaptation Committee (TAC) as shown below:

Substance	Proposed Maximum Concentration	Actual Concentration
Lead (Pb)	0.1%	< 0.1%
Mercury (Hg)	0.1%	< 0.1%
Cadmium (Cd)	0.01%	< 0.01%
Hexavalent Chromium ($Cr6^{+}$)	0.1%	< 0.1%
Polybrominated biphenyls (PBB)	0.1%	< 0.1%
Polybrominated diphenyl ethers (PBDE)	0.1%	< 0.1%
Bis (2-ethylhexyl) phthalate (DEHP)	0.1%	< 0.1%
Butyl benzyl phthalate (BBP)	0.1%	< 0.1%
Dibutyl phthalate (DBP)	0.1%	< 0.1%
Diisobutyl phthalate (DIBP)	0.1%	< 0.1%

Certain components of products as stated above are exempted under the Annex III of the RoHS2 Directives as noted below. Examples of exempted components are:

- Mercury in cold cathode fluorescent lamps and external electrode fluorescent lamps (CCFL and EEFL) for special purposes not exceeding (per lamp):
  - » Short length (500 mm): maximum 3.5 mg per lamp.
  - » Medium length (> 500 mm and 1,500 mm): maximum 5 mg per lamp.
  - » Long length (> 1,500 mm): maximum 13 mg per lamp.
- Lead in glass of cathode ray tubes.
- Lead in glass of fluorescent tubes not exceeding 0.2% by weight.
- Lead as an alloying element in aluminum containing up to 0.4% lead by weight.
- Copper alloy containing up to 4% lead by weight.
- Lead in high melting temperature type solders (i.e. lead-based alloys containing 85% by weight or more lead).
- Electrical and electronic components containing lead in a glass or ceramic other than dielectric ceramic in capacitors, e.g. piezoelectronic devices, or in a glass or ceramic matrix compound.

Indian Restriction of Hazardous Substances

Restriction on Hazardous Substances statement (India). This product complies with the “India E-waste Rule 2011” and prohibits use of lead, mercury, hexavalent chromium, polybrominated biphenyls or polybrominated diphenyl ethers in concentrations exceeding 0.1 weight % and 0.01 weight % for cadmium, except for the exemptions set in Schedule 2 of the Rule.

Product Disposal at End of Product Life

ViewSonic® respects the environment and is committed to working and living green. Thank you for being part of Smarter, Greener Computing. Please visit the ViewSonic® website to learn more.

USA & Canada:

https://www.viewsonic.com/us/go-green-with-viewsonic

Europe:

https://www.viewsonic.com/eu/environmental-social-governance/recycle

Taiwan:

https://recycle.moenv.gov.tw/

For EU users, please contact us for any safety/accident issue experienced with this product:

ViewSonic Europe Limited
Haaksbergweg 75
1101 BR Amsterdam
Netherlands

+31 (0) 650608655

EPREL@viewsoniceurope.com

https://www.viewsonic.com/eu/

Copyright Information

Copyright© ViewSonic® Corporation, 2025. All rights reserved.

Macintosh and Power Macintosh are registered trademarks of Apple Inc.

Microsoft, Windows, and the Windows logo are registered trademarks of Microsoft Corporation in the United States and other countries.

ViewSonic® and the three birds logo are registered trademarks of ViewSonic® Corporation.

VESA is a registered trademark of the Video Electronics Standards Association. DPMS, DisplayPort, and DDC are trademarks of VESA.

ENERGY STAR® is a registered trademark of the U.S. Environmental Protection Agency (EPA).

As an ENERGY STAR® partner, ViewSonic® Corporation has determined that this product meets the ENERGY STAR® guidelines for energy efficiency.

Disclaimer: ViewSonic® Corporation shall not be liable for technical or editorial errors or omissions contained herein; nor for incidental or consequential damages resulting from furnishing this material, or the performance or use of this product.

In the interest of continuing product improvement, ViewSonic® Corporation reserves the right to change product specifications without notice. Information in this document may change without notice.

No part of this document may be copied, reproduced, or transmitted by any means, for any purpose without prior written permission from ViewSonic® Corporation.

Customer Service

For technical support or product service, see the table below or contact your reseller.

Note: You will need the product's serial number.

Country/ Region	Website	Country/ Region	Website
Asia Pacific & Africa			
Australia	www.viewsonic.com/au/	Bangladesh	www.viewsonic.com/bd/
中国 (China)	www.viewsonic.com.cn	香港 (繁體中文)	www.viewsonic.com/hk/
Hong Kong (English)	www.viewsonic.com/hk-en/	India	www.viewsonic.com/in/
Indonesia	www.viewsonic.com/id/	Israel	www.viewsonic.com/il/
日本 (Japan)	www.viewsonic.com/jp/	Korea	www.viewsonic.com/kr/
Malaysia	www.viewsonic.com/my/	Middle East	www.viewsonic.com/me/
Myanmar	www.viewsonic.com/mm/	Nepal	www.viewsonic.com/np/
New Zealand	www.viewsonic.com/nz/	Pakistan	www.viewsonic.com/pk/
Philippines	www.viewsonic.com/ph/	Singapore	www.viewsonic.com/sg/
臺灣 (Taiwan)	www.viewsonic.com/tw/	ประเทศไทย	www.viewsonic.com/th/
Việt Nam	www.viewsonic.com/vn/	South Africa & Mauritius	www.viewsonic.com/za/
Americas			
United States	www.viewsonic.com/us	Canada	www.viewsonic.com/us
Latin America	www.viewsonic.com/la		
Europe			
Europe	www.viewsonic.com/eu/	France	www.viewsonic.com/fr/
Deutschland	www.viewsonic.com/de/	Қазақстан	www.viewsonic.com/kz/
Россия	www.viewsonic.com/ru/	España	www.viewsonic.com/es/
Türkiye	www.viewsonic.com/tr/	Україна	www.viewsonic.com/ua/
United Kingdom	www.viewsonic.com/uk/		

Limited Warranty

ViewSonic® Projector

What the warranty covers:

ViewSonic® warrants its products to be free from defects in material and workmanship, under normal use, during the warranty period. If a product proves to be defective in material or workmanship during the warranty period, ViewSonic® will, at its sole option, repair or replace the product with a like product. Replacement product or parts may include remanufactured or refurbished parts or components.

Limited Three (3) year General Warranty:

Subject to the more limited one (1) year warranty set out below, North and South America: Three (3) years warranty for all parts excluding the lamp, three (3) years for labor, and one (1) year for the original lamp from the date of the first consumer purchase.

Other regions or countries: Please check with your local dealer or local ViewSonic® office for the warranty information.

Limited One (1) year Heavy Usage Warranty:

Under heavy usage settings, where a projector's use includes more than fourteen (14) hours average daily usage, North and South America: One (1) year warranty for all parts excluding the lamp, one (1) year for labor, and ninety (90) days for the original lamp from the date of the first consumer purchase; Europe: One (1) year warranty for all parts excluding the lamp, one (1) year for labor, and ninety (90) days for the original lamp from the date of the first consumer purchase. Other regions or countries: Please check with your local dealer or local ViewSonic® office for the warranty information. Lamp warranty subject to terms and conditions, verification and approval. Applies to manufacturer's installed lamp only. All accessory lamps purchased separately are warranted for 90 days.

Who the warranty protects:

This warranty is valid only for the first consumer purchaser.

What the warranty does not cover:

1. Any product on which the serial number has been defaced, modified, or removed.
2. Damage, deterioration, or malfunction resulting from:
   - » Accident, misuse, neglect, fire, water, lightning, or other acts of nature, unauthorized product modification, or failure to follow instructions supplied with the product.
   - » Operation outside of product specifications.
   - » Operation of the product for other than the normal intended use or not under normal conditions.
   - » Repair or attempted repair by anyone not authorized by ViewSonic®.
   - » Any damage of the product due to shipment.
   - » Removal or installation of the product.
   - » Causes external to the product, such as electric power fluctuations or failure.
   - » Use of supplies or parts not meeting Viewsonic's specifications.
   - » Normal wear and tear.
   - » Any other cause which does not relate to a product defect.
3. Removal, installation, and set-up service charges.

How to get service:

1. For information about receiving service under warranty, contact ViewSonic® Customer Support (Please refer to the "Customer Support" page). You will need to provide your product's serial number.
2. To obtain warranted service, you will be required to provide: (a) the original dated sales slip, (b) your name, (c) your address, (d) a description of the problem, and (e) the serial number of the product.
3. Take or ship the product, freight prepaid, in the original container to an authorized ViewSonic® service center or ViewSonic®.
4. For additional information or the name of the nearest ViewSonic® service center, contact ViewSonic®.

Limitation of implied warranties:

There are no warranties, express or implied, which extend beyond the description contained herein including the implied warranty of merchantability and fitness for a particular purpose.

Exclusion of damages:

ViewSonic's liability is limited to the cost of repair or replacement of the product. ViewSonic® shall not be liable for:

1. Damage to other property caused by any defects in the product, damages based upon inconvenience, loss of use of the product, loss of time, loss of profits, loss of business opportunity, loss of goodwill, interference with business relationships, or other commercial loss, even if advised of the possibility of such damages.
2. Any other damages, whether incidental, consequential or otherwise.
3. Any claim against the customer by any other party.

Effect of state law:

This warranty gives you specific legal rights, and you may also have other rights which vary from local authority. Some local governments do not allow limitations on implied warranties and/or do not allow the exclusion of incidental or consequential damages, so the above limitations and exclusions may not apply to you.

Sales outside the U.S.A. and Canada:

For warranty information and service on ViewSonic® products sold outside of the U.S.A. and Canada, contact ViewSonic® or your local ViewSonic® dealer.

The warranty period for this product in mainland China (Hong Kong, Macao, and Taiwan Excluded) is subject to the terms and conditions of the Maintenance Guarantee Card.

For users in Europe and Russia, full details of warranty provided can be found at: http://www.viewsonic.com/eu/ under "Support/Warranty Information".

Mexico Limited Warranty

ViewSonic® Projector

What the warranty covers:

ViewSonic® warrants its products to be free from defects in material and workmanship, under normal use, during the warranty period. If a product proves to be defective in material or workmanship during the warranty period, ViewSonic® will, at its sole option, repair or replace the product with a like product. Replacement product or parts may include remanufactured or refurbished parts or components & accessories.

How long the warranty is effective:

3 years for all parts excluding the lamp, 3 years for labor, 1 year for the original lamp from the date of the first consumer purchase.

Lamp warranty subject to terms and conditions, verification and approval. Applies to manufacturer's installed lamp only.

All accessory lamps purchased separately are warranted for 90 days.

Who the warranty protects:

This warranty is valid only for the first consumer purchaser.

What the warranty excludes and does not cover:

1. Any product on which the serial number has been defaced, modified or removed.
2. Damage, deterioration, or malfunction resulting from:
   - Accident, misuse, neglect, fire, water, lightning, or other acts of nature, unauthorized product modification, unauthorized attempted repair, or failure to follow instructions supplied with the product.
   - Any damage of the product due to shipment.
   - Causes external to the product, such as electrical power fluctuations or failure.
   - Use of supplies or parts not meeting ViewSonic®'s specifications.
   - Normal wear and tear.
   - Any other cause which does not relate to a product defect.
3. Any product exhibiting a condition commonly known as "image burn-in" which results when a static image is displayed on the product for an extended period of time.
4. Removal, installation, insurance, and set-up service charges.

How to get service:

For information about receiving service under warranty, contact ViewSonic® Customer Support (Please refer to the attached "Customer Service" page). You will need to provide your product's serial number, so please record the product information in the space provided below on your purchase for your future use. Please retain your receipt of proof of purchase to support your warranty claim.

For Your Records

Product Name: _____ Model Number: _____

Document Number: _____ Serial Number: _____

Purchase Date: _____ Extended Warranty Purchase? _____(Y/N)

If so, what date does warranty expire? _____

1. To obtain warranty service, you will be required to provide (a) the original dated sales slip, (b) your name, (c) your address, (d) a description of the problem, and (e) the serial number of the product.
2. Take or ship the product, in the original container packaging, to an authorized ViewSonic® service center.
3. Round trip transportation costs for in-warranty products will be paid by ViewSonic®.

Limitation of implied warranties:

There are no warranties, express or implied, which extend beyond the description contained herein including the implied warranty of merchantability and fitness for a particular purpose.

Exclusion of damages:

ViewSonic®'s liability is limited to the cost of repair or replacement of the product. ViewSonic® shall not be liable for:

1. Damage to other property caused by any defects in the product, damages based upon inconvenience, loss of use of the product, loss of time, loss of profits, loss of business opportunity, loss of goodwill, interference with business relationships, or other commercial loss, even if advised of the possibility of such damages.
2. Any other damages, whether incidental, consequential or otherwise.
3. Any claim against the customer by any other party.
4. Repair or attempted repair by anyone not authorized by ViewSonic®.

Contact Information for Sales & Authorized Service (Centro Autorizado de Servicio) within Mexico:	
Name, address, of manufacturer and importers: México, Av. de la Palma #8 Piso 2 Despacho 203, Corporativo Interpalmas, Col. San Fernando Huixquilucan, Estado de México Tel: (55) 3605-1099 http://www.viewsonic.com/la/soporte/index.htm	
NÚMERO GRATIS DE ASISTENCIA TÉCNICA PARA TODO MÉXICO: 001.866.823.2004	
Hermosillo: Distribuciones y Servicios Computacionales SA de CV. Calle Juarez 284 local 2 Col. Bugambilias C.P: 83140 Tel: 01-66-22-14-9005 E-Mail: disc2@hmo.megared.net.mx	***Villahermosa:*** Compumantenimietnos Garantizados, S.A. de C.V. AV. GREGORIO MENDEZ #1504 COL, FLORIDA C.P. 86040 Tel: 01 (993) 3 52 00 47 / 3522074 / 3 52 20 09 E-Mail: compumantenimientos@prodigy.net.mx
Puebla, Pue. (Matriz): RENTA Y DATOS, S.A. DE C.V. Domicilio: 29 SUR 721 COL. LA PAZ 72160 PUEBLA, PUE. Tel: 01(52).222.891.55.77 CON 10 LINEAS E-Mail: datos@puebla.megared.net.mx	***Veracruz, Ver.:*** CONEXION Y DESARROLLO, S.A DE C.V. Av. Americas # 419 ENTRE PINZÓN Y ALVARADO Fracc. Reforma C.P. 91919 Tel: 01-22-91-00-31-67 E-Mail: gacosta@qplus.com.mx
Chihuahua: Soluciones Globales en Computación C. Magisterio # 3321 Col. Magisterial Chihuahua, Chih. Tel: 4136954 E-Mail: Cefeo@soluglobales.com	***Cuernavaca:*** Compusupport de Cuernavaca SA de CV Francisco Leyva # 178 Col. Miguel Hidalgo C.P. 62040, Cuernavaca Morelos Tel: 01 777 3180579 / 01 777 3124014 E-Mail: aquevedo@compusupportcva.com
Distrito Federal: QPLUS, S.A. de C.V. Av. Coyoacán 931 Col. Del Valle 03100, México, D.F. Tel: 01(52)55-50-00-27-35 E-Mail : gacosta@qplus.com.mx	***Guadalajara, Jal.:*** SERVICRECE, S.A. de C.V. Av. Niños Héroes # 2281 Col. Arcos Sur, Sector Juárez 44170, Guadalajara, Jalisco Tel: 01(52)33-36-15-15-43 E-Mail: mmiranda@servicrece.com
Guerrero Acapulco: GS Computación (Grupo Sesicomp) Progreso #6-A, Colo Centro 39300 Acapulco, Guerrero Tel: 744-48-32627	***Monterrey:*** Global Product Services Mar Caribe # 1987, Esquina con Golfo Pérsico Fracc. Bernardo Reyes, CP 64280 Monterrey N.L. México Tel: 8129-5103 E-Mail: aydeem@gps1.com.mx
MERIDA: ELECTROSER Av Reforma No. 403Gx39 y 41 Mérida, Yucatán, México CP97000 Tel: (52) 999-925-1916 E-Mail: rrrb@sureste.com	***Oaxaca, Oax.:*** CENTRO DE DISTRIBUCION Y SERVICIO, S.A. de C.V. Murguía # 708 P.A., Col. Centro, 68000, Oaxaca Tel: 01(52)95-15-15-22-22 Fax: 01(52)95-15-13-67-00 E-Mail. gpotai2001@hotmail.com
Tijuana: STD Av Ferrocarril Sonora #3780 L-C Col 20 de Noviembr Tijuana, Mexico	***FOR USA SUPPORT:*** ViewSonic® Corporation 381 Brea Canyon Road, Walnut, CA. 91789 USA Tel: 800-688-6688 E-Mail: http://www.viewsonic.com

ViewSonic®