cudy

Quick Installation Guide

Wall-Plate Wi-Fi Access Point

Model: AP1300E Wall | AP3000E Wall | AP3600E Wall

NEED TECH HELP?

support@cudy.com
www.cudy.com/qr_vg_ap
www.cudy.com
www.cudy.com/download

810600515

1 Overview

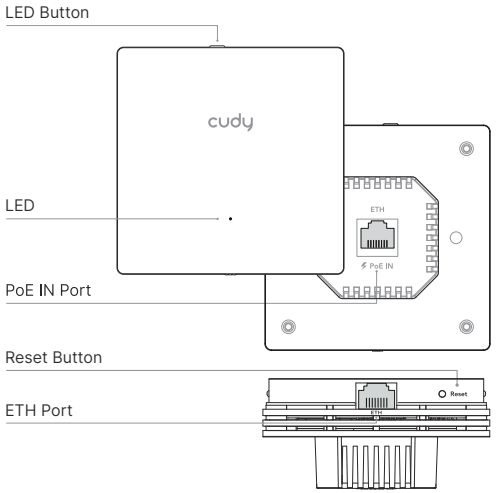

Port/Button	Description
LED Button	By default, only to turn on/off the LED. When it works as a standalone AP, Wi-Fi control can be enabled on its management web page. Then Wi-Fi and LED control will synchronize.
PoE IN Port	To connect a PoE adapter/switch for power supply.
ETH Port	To connect a device via an Ethernet cable for Gigabit Internet access.
Reset Button	Press 2 seconds to restore factory defaults.

LED Status		Indication
Off		
Red	Flashing	
	On	
White	Flashing	
	On	
Red and White alternate		

2 Install

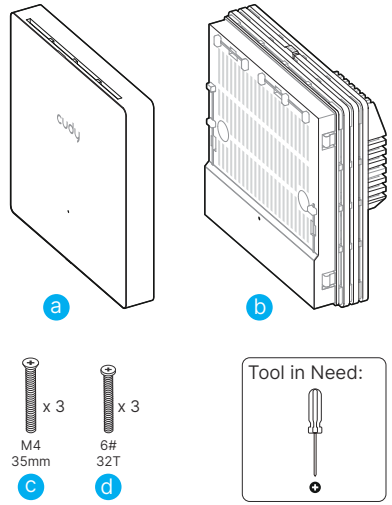

1. Detach the faceplate from AP

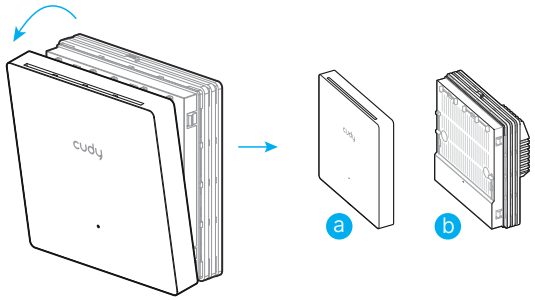

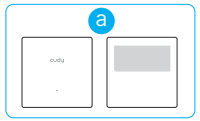

Note:
Wi-Fi name(SSID) is on the label behind the faceplate.

2. Detach the faceplate from junction box

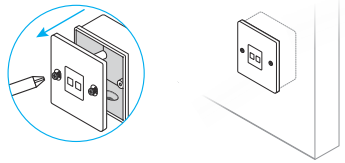

3. Connect the PoE Cable to the PoE IN port of AP

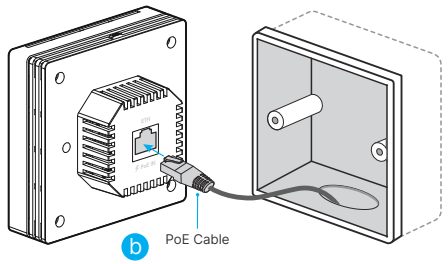

4. Secure AP with the enclosed screws

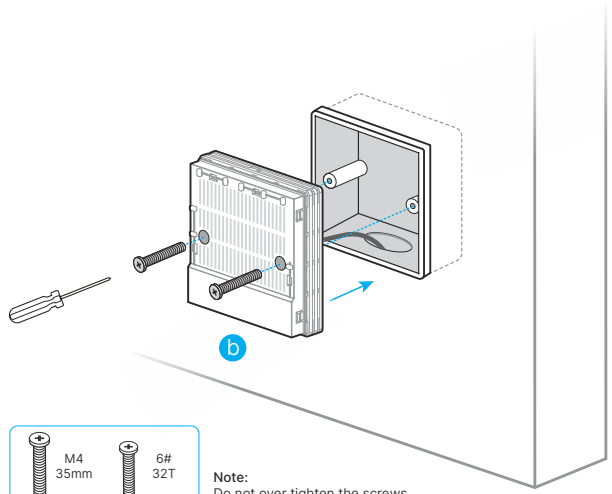

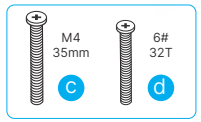

Note:
Do not over tighten the screws.
If the enclosed screws do not fit the junction box, use the screws attached to the junction box instead.

5. Press the faceplate back to AP

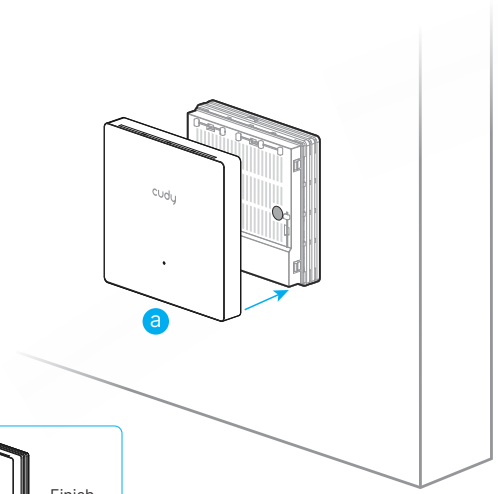

Finish

3 Set Up

Scenario A: With Cudy Controller

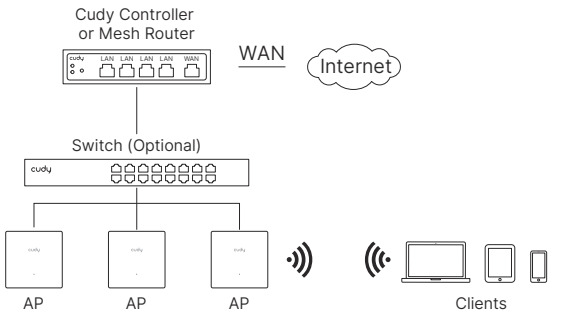

In this topology, the AP supports Plug-and-Play by default. It is managed only via the Cudy Controller or Mesh Router web page.

Note:
If the AP was configured before, please reset it to the factory defaults.
Cudy Controller/Mesh Router must have network access to the AP in order to find, adopt, and manage them.

Scenario B: Standalone AP

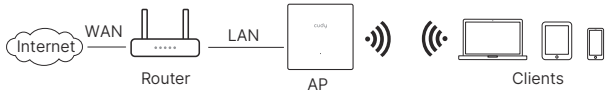

In this topology, the AP is configured and managed on its own web page.

Take the steps to configure the AP:

1 Connect your device wirelessly to the AP with the default SSID printed on the product label.

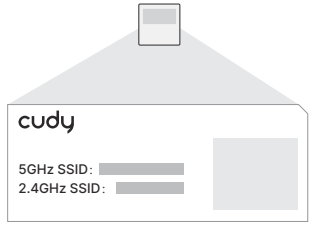

2 Launch a web browser and enter https://cudyap.net (or 192.168.10.254) in the address bar. Create an administrator password to log in.

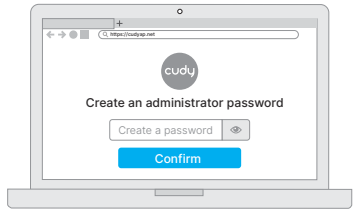

3 Follow the step-by-step instructions to finish Quick Setup.

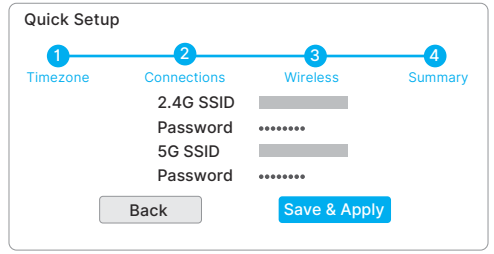

Enjoy the Internet!

EU Declaration of Conformity

1. English
Cudy hereby declares that this device complies with the essential requirements and other relevant provisions of Directive 2014/30/EU, Directive 2014/35/EU, Directive 2014/53/EU, Directive 2011/65/EU, Directive (EU) 2015/863, Directive 2009/125/EC, Directive (EU)2023/826, Directive (EU)2019/1782.
The original EU Declaration of Conformity is available at http://www.cudy.com/ce.

2. Deutsch
Cudy erklärt hiermit, dass dieses Gerät den grundlegenden Anforderungen und anderen relevanten Bestimmungen der Richtlinie 2014/30/EU, Richtlinie 2014/35/EU, Richtlinie 2014/53/EU, Richtlinie 2011/65/EU, Richtlinie (EU) 2015/863, Richtlinie (EU)2019/1782, Richtlinie 2009/125/EG, Richtlinie (EU)2023/826.
Die ursprüngliche EU-Konformitätserklärung findet sich unter http://www.cudy.com/ce.

3. Español
Cudy declara por la presente que este dispositivo cumple con los requisitos esenciales y otras disposiciones pertinentes de las Directiva 2014/30/UE, Directiva 2014/35/UE, Directiva 2014/53/UE, Directiva 2011/65/UE, Directiva (UE)2015/863, Directiva 2009/125/EC, Directiva (UE)2023/826, Directiva (UE)2019/1782.
La declaración original de conformidad de la UE está disponible en http://www.cudy.com/ce.

4. Italiano
Cudy dichiara con la presente che questo dispositivo è conforme ai requisiti essenziali e alle altre disposizioni pertinenti delle Direttiva 2014/30/UE, Direttiva 2014/35/UE, Direttiva 2014/53/UE, Direttiva 2011/65/UE, Direttiva (UE) 2015/863, Direttiva (UE)2019/1782, Direttiva 2009/125/CE, Direttiva (UE)2023/826.
La dichiarazione originale di conformità UE è disponibile all'indirizzo http://www.cudy.com/ce.

5. Français
Cudy déclare par la présente que cet appareil est conforme aux exigences essentielles et autres dispositions pertinentes des Directive 2014/30/UE, Directive 2014/35/UE, Directive 2014/53/UE, Directive 2011/65/UE, Directive (UE)2015/863, (UE)2019/1782, Directive 2009/125/CE, Directive(UE)2023/826.
La déclaration originale de conformité UE est disponible sur http://www.cudy.com/ce.

6. Ελληνικά
Η Cudy δηλώνει με την παρούσα ότι αυτή η συσκευή συμμορφώνεται με τις βασικές απαιτήσεις και άλλες σχετικές διατάξεις των Οδηγία 2014/30/ΕΕ, Οδηγία 2014/35/ΕΕ, Οδηγία 2014/53/ΕΕ, Οδηγία 2011/65/ ΕΕ, Οδηγία (ΕΕ) 2015/863, Οδηγία2009/125/ΕΚ, Οδηγία(ΕΕ)2023/826, Οδηγία(ΕΕ)2019/1782.
Η αρχική Δήλωση Συμμόρφωσης ΕΕ βρίσκεται στη διεύθυνση http://www.cudy.com/ce.

7. Nederlands
Cudy verklaart hierbij dat dit apparaat voldoet aan de essentiële vereisten en andere relevante bepalingen van Richtlijn 2014/30/EU, Richtlijn 2014/35/EU, Richtlijn 2014/53/EU, Richtlijn 2011/65/EU, Richtlijn (EU)2015/863, Richtlijn 2009/125/EG, Richtlijn (EU)2023/826, Richtlijn (EU)2019/1782.
De oorspronkelijke EU-conformiteitsverklaring is beschikbaar op http://www.cudy.com/ce.

8. Português
A Cudy declara por meio desta que este dispositivo está em conformidade com os requisitos essenciais e outras disposições relevantes das Diretiva 2014/30/UE, Diretiva 2014/35/UE, Diretiva 2014/53/UE, Diretiva 2011/65/UE, Diretiva (UE)2015/863, Diretiva 2009/125/CE, Diretiva (UE)2023/826, Diretiva (UE)2019/1782.
A declaração original de conformidade da UE está disponível em http://www.cudy.com/ce.

9. Polski
Firma Cudy niniejszym oświadcza, że to urządzenie spełnia zasadnicze wymagania i inne stosowne postanowienia Dyrektywa 2014/30/UE, Dyrektywa 2014/35/UE, Dyrektywa 2014/53/UE, Dyrektywa 2011/65/UE, Dyrektywa (UE)2015/863, Dyrektywa 2009/125/WE, Dyrektywa (UE)2023/826, Dyrektywa (UE)2019/1782.
Oryginalna deklaracja zgodności UE znajduje się pod adresem http://www.cudy.com/ce.

10. Türkçe
Cudy, bu cihazın aşağıdaki AB Direktiflerinin temel gerekliliklerine ve ilgili hükümlerine uygun olduğunu beyan eder 2014/30/AB Direktifi, 2014/35/AB Direktifi, 2014/53/AB Direktifi, 2011/65/AB Direktifi, (AB) 2015/863 Direktifi, 2009/125/AT Direktifi, (AB) 2023/826 Direktifi, (AB) 2019/1782 Direktifi.
Orijinal AB Uygunluk Beyanı belgesi şu adreste bulunabilir http://www.cudy.com/ce.

11. Norsk
Cudy erklærer herved at denne enheten er i samsvar med de grunnleggende kravene og andre relevante bestemmelser i Direktiv 2014/30/EU, Direktiv 2014/35/EU, Direktiv 2014/53/EU, Direktiv 2011/65/EU, Direktiv (EU)2015/863, Direktiv 2009/125/EG, Direktiv (EU)2023/826, Direktiv (EU)2019/1782.
Den opprinnelige EU-samsvarserklæringen finnes på http://www.cudy.com/ce.

12. Dansk
Cudy erklærer herved, at denne enhed er i overensstemmelse med de væsentlige krav og andre relevante bestemmelser i Direktiv 2014/30/EU, Direktiv 2014/35/EU, Direktiv 2014/53/EU, Direktiv 2011/65/EU, Direktiv (EU)2015/863, Direktiv 2009/125/EG, Direktiv (EU)2023/826, Direktiv (EU)2019/1782.
Den oprindelige EU-overensstemmelseserklæring kan findes på http://www.cudy.com/ce.

13. Suomi
Cudy todistaa tällä, että tämä laite täyttää Direktiivi 2014/30/EU, Direktiivi 2014/35/EU, Direktiivi 2014/53/EU, Direktiivi 2011/65/EU, Direktiivi (EU)2015/863, Direktiivi 2009/125/EY, Direktiivi (EU)2023/826, Direktiivi (EU)2019/1782 oleelliset vaatimukset ja muut asiaankuuluvat määräykset.
Alkuperäinen EU-yhdenmukaisuusvakuutus on saatavilla osoitteessa http://www.cudy.com/ce.

14. Svenska
Cudy förklarar härmed att denna produkt uppfyller de grundläggande kraven och andra relevanta bestämmelser i Direktiv 2014/30/EU, Direktiv 2014/35/EU, Direktiv 2014/53/EU, Direktiv 2011/65/EU, Direktiv (EU)2015/863, Direktiv 2009/125/EG, Direktiv (EU)2023/826, Direktiv (EU)2019/1782.
Den ursprungliga EU-försäkran om överensstämmelse finns på http://www.cudy.com/ce.

15. Čeština
Společnost Cudy tímto prohlašuje, že toto zařízení splňuje základní požadavky a další příslušná ustanovení Směrnice 2014/30/EU, SměSměrnice 2014/35/EU, SmSměrnice 2014/53/EU, Smrnice 2011/65/EU, Směrnice (EU)2015/863, Směrnice 2009/125/ES, Směrnice (EU)2023/826, Směrnice (EU)2019/1782.
Původní prohlášení o shodě EU je k dispozici na http://www.cudy.com/ce.

16. Slovenčina
Spoločnosť Cudy týmto vyhlasuje, že toto zariadenie spĺňa základné požiadavky a ďalšie príslušné ustanovenia smernice 2014/30/ EÚ, smernice 2014/35/ EÚ, smernice 2014/53/ EÚ, smernice 2011/65/ EÚ, smernice (EÚ) 2015/863, smernice 2009/125/ES, smernice (EÚ)2023/826, smernice (EÚ)2019/1782.
Pôvodné vyhlásenie o zhode EÚ je dostupné na http://www.cudy.com/ce.

17. Magyar
A Cudy ezennel kijelenti, hogy ez az eszköz megfelel a 2014/30/EU Irányelv, 2014/35/EU Irányelv, 2014/53/EU Irányelv, 2011/65/EU Irányelv, (EU)2015/863 Irányelv, 2009/125/EK Irányelv, (EU)2023/826 Irányelv, (EU)2019/1782 Irányelv alapvető követelményeinek és egyéb vonatkozó rendelkezéseinek.
Az eredeti EU megfelelőségi nyilatkozat itt érhető el http://www.cudy.com/ce.

18. Română
Cudy declară prin prezenta că acest dispozitiv este conform cu cerințele esențiale și alte prevederi relevante ale Directiva 2014/30/UE, Directiva 2014/35/UE, Directiva 2014/53/UE, Directiva 2011/65/UE, Directiva (UE)2015/863, Directiva 2009/125/CE, Directiva (UE)2023/826, Directiva (UE)2019/1782.
Declarația originală de conformitate UE este disponibilă la http://www.cudy.com/ce.

19. Български
Cudy декларира с настоящото, че това устройство отговаря на основните изисквания и другите приложими разпоредби на Директива2014/30/ЕС, Директива2014/35/ЕС, Директива2014/53/ ЕС, Директива 2011/65/ЕС, Директива (ЕС) 2015/863, Директива 2009/125/ЕО, Директива (ЕС)2023/826, Директива (ЕС)2019/1782.
Оригиналната декларация за съответствие на ЕС е достъпна на http://www.cudy.com/ce.

20. Lietuvių kalba
Cudy šiuo pareiškia, kad šis įrenginys atitinka esminius reikalavimus ir kitas svarbias Direktyvą 2014/30/ES, Direktyvą 2014/35/ES, Direktyvą 2014/53/ ES, Direktyvos 2011/65/ES, Direktyvos (ES)2015/863, Direktyvos 2009/125/EB, Direktyvos (ES)2023/826, Direktyvos (ES)2019/1782 nuostatas.
Originali ES atitikties deklaracija pateikta http://www.cudy.com/ce.

21. Українська
Cudy цим заявляє, що цей пристрій відповідає основним вимогам та іншим відповідним положенням Директива 2014/30/EU, Директива 2014/35/EU, Директива 2014/53/EU, Директива 2011/65/EU, Директива (EU) 2015/863, Директива 2009/125/EC, Директива (EU)2023/826, Директива (EU)2019/1782.
Оригінальна декларація відповідності ЄС доступна за адресою http://www.cudy.com/ce.

22. Hrvatski
Cudy ovime izjavljuje da je ovaj uređaj u skladu s bitnim zahtjevima i drugim relevantnim odredbama Direktiva 2011/65/EU, Direktiva 2014/30/EU, Direktiva 2014/35/EU, Direktiva 2014/53/EU, Direktiva (EU) 2015/863, Direktiva 2009/125/EZ, Direktiva (EU)2023/826, Direktiva (EU)2019/1782.
Izvorna EU izjava o sukladnosti dostupna je na http://www.cudy.com/ce.

23. Slovenščina
Cudy s tem izjavlja, da je ta naprava skladna z bistvenimi zahtevami in drugimi relevantnimi določili Direktiva 2011/65/EU, Direktiva 2014/30/EU, Direktiva 2014/35/EU, Direktiva 2014/53/EU, Direktiva (EU)2015/863, Direktiva 2009/125/ES, Direktiva (EU)2023/826, Direktiva (EU)2019/1782.
Prvotna izjava EU o skladnosti je na voljo na http://www.cudy.com/ce.

24. Latviski
Cudy ar šo paziņo, ka šī ierīce atbilst Direktīva 2011/65/ES, Direktīva 2014/53/ES, Direktīva 2014/30/ ES,Direktīva 2014/35/ES, Direktīva (ES)2015/863, Direktīva 2009/125/EC, Direktīva (ES)2023/826, Direktīva (ES)2019/1782 būtiskajām prasībām un citiem atbilstošiem noteikumiem.
Sākotnējā ES atbilstības deklarācija pieejama http://www.cudy.com/ce.

25. Eesti
Cudy kinnitab käesolevaga, et see seade vastab direktiivi 2011/65/EL, direktiivi 2014/30/EL, direktiivi 2014/35/EL, direktiivi 2014/53/EL, direktiivi (EL) 2015/863, direktiivi 2009/125/EÜ, direktiivi (EL)2023/826, direktiivi (EL)2019/1782 põhinõuetele ja muudele asjakohastele sätetele.
Originaalne EL vastavusdeklaratsioon on saadaval aadressil http://www.cudy.com/ce.

GNU General Public License Notice

The software code in this product was created by third parties and is licensed under the GNU General Public License ("GPL"). If applicable, Cudy ("Cudy" in this context refers to the Cudy entity offering respective software for download or being in charge of the distribution of products that contain respective code) makes the corresponding GPL source code available upon request via the official website, either independently or with the assistance of third parties (such as Shenzhen Cudy Technology Co., Ltd.).

For GPL-related questions, email support@cudy.com. In addition, Cudy offers a GPL-Code-Centre under https://www.cudy.com/gplcodecenterdownload where users can get the GPL source codes used in Cudy products for free. Please note, that the GPL-Code-Centre is only provided as a courtesy to Cudy's customers but may neither offer a full set of source codes used in all products nor always provide the latest or actual version of such source codes.

The GPL code used in this product is subject to the copyrights of one or more authors and is supplied WITHOUT ANY WARRANTY.

WEEE

According to the EU Directive on Waste Electrical and Electronic Equipment (WEEE - 2012/19 / EU), this product must not be disposed of as normal household waste.

Instead, they should be returned to the place of purchase or taken to a public collection point for recyclable waste. By ensuring this product is disposed of correctly, you will help prevent potential negative consequences for the environment and human health, which could otherwise be caused by inappropriate waste handling of this product. For more information, please contact your local authority or the nearest collection point. Improper disposal of this type of waste may result in penalties according to national regulations.

RoHS Made in China