NOVA 27″

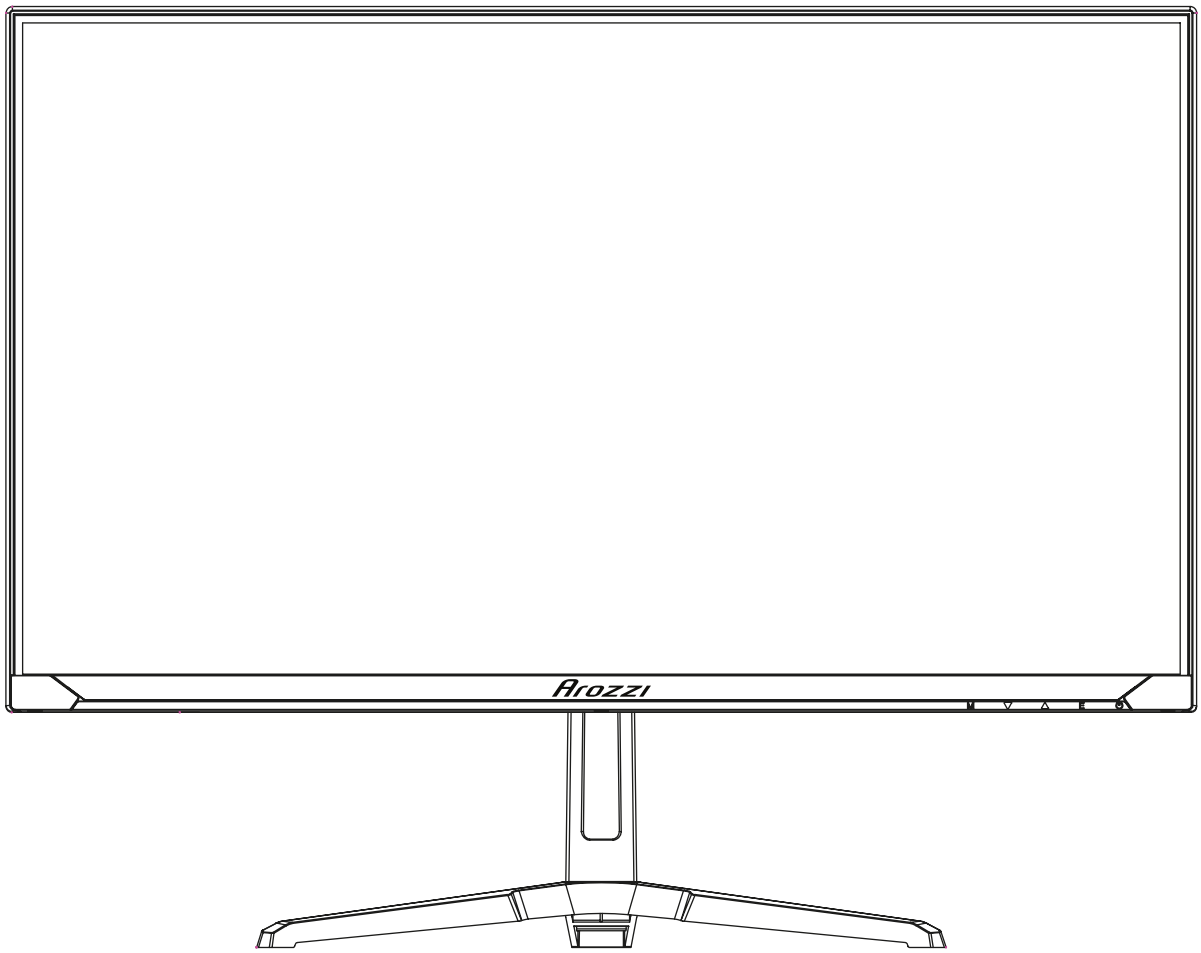

Arozzi®
Designed in Sweden

© Arozzi Europe AB. 2025

WARNINGS

POWER

- Only use the power unit provided to power the device.
- Check mains rating before plugging the power unit in.
- Do not pull on the cable to unplug the device.
- Turn Off the device before unplugging.

SAFETY PRECAUTIONS

- Keep the device away from rain and humidity to prevent risk of fire and electrocution.
- Do not introduce material (solid or liquid) inside. If this should accidentally occur, disconnect the device from power and have it inspected by qualified personnel.
- Keep the device away from children, to prevent accidental damage.
- Do not touch the device with wet hands to prevent electrical shock or mechanical damage.
- Do not use the device if it should fall or the external casing is damaged. Risk of electrocution if the device is used in such conditions.

- It is advisable to disconnect the device from power if the monitor is not used for a certain time.
- Never open the device. In all cases, contact Arozzi for repairs.

INSTALLATION PRECAUTIONS

- To prevent the device from overheating, arrange it in a position that allows the flow of air to enter through the slots in the casing.
- Do not install near sources of heat, such as radiators or hot air ducts.
- Slots and openings in the cabinet are provided for ventilation. These openings must not be blocked or covered: risk of fire, electrocution and mechanical failure.
- Keep away from direct sunlight.
- Do not use the device in presence of smoke, vapor, humidity, dust or intense vibrations.

- Do not install this device on an unstable surface, such as a wobbly or slanted table. The device could fall causing injury or mechanical failures.
- Do not install the device in a place where it could be exposed to humidity or water.
- Do not direct a jet of water onto the device: risk of fire, electrocution or mechanical failure.
- Stop using the device if water or other material should penetrate inside: risk of fire and electrocution.
- Do not place heavy or heat-generating objects on top of the device: this could damage the casing and/or increase internal temperature causing faults.
- Keep magnets and magnetized objects away from the device to prevent faults.

- Wait for a while before operating a device after transporting it from a cold place to a warm place and vice versa. Wait on average for about three hours: this will allow the device to adapt to the new ambient (temperature, humidity, etc.).

The monitor is provided with a metal base and rubber feet. It can be positioned on a horizontal surface, such as a desk or a table. Make sure that the device is fastened firmly and that it is not resting on unstable supports or surfaces. Dropping could cause severe injury and damage the device.

Remember to adjust the brightness and contrast to obtain a perfect image.

© Arozzi Europe AB. 2025

CLEANING THE DEVICE

Use a dry cloth to remove dust and dirt. Dip the cloth in neutral detergent if dirt cannot be eliminated with a dry cloth alone. Do not use volatile liquids (such as petrol, alcohol, solvents, etc.) or chemically treated clothes to clean the device to prevent deformation, deterioration or scratches to the paint finish.

PRIVACY AND COPYRIGHT

This monitor is a device for Gaming, Content creation or Media consumption.
Recording of images is subject to the laws in force in your country.
Recording of images protected by copyright is forbidden.

Product users shall be responsible for checking and respecting all local rules and regulations concerning monitoring and recording video signals. The manufacturer SHALL NOT BE LIABLE for use of this product not in compliance with the laws in force.

youtube.com/@ArozziSupport

EU: arozzi.se/support/
US: arozzi.com/support/
Elsewhere: arozzi.se/support/

Model: AZ-NO-27T2K180
Nova 27" User Manual rev. 1.0

© Arozzi Europe AB. 2025

PACKING LIST

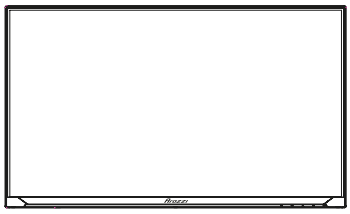

Monitor

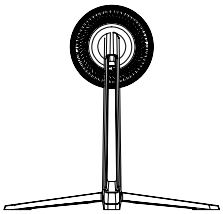

Stand

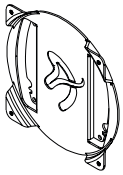

VESA Adapter + Screws

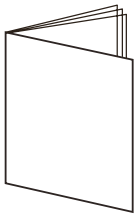

User Manual

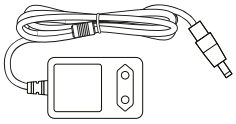

Power Adapter

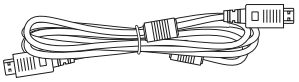

DisplayPort Cable

MONITOR INPUTS

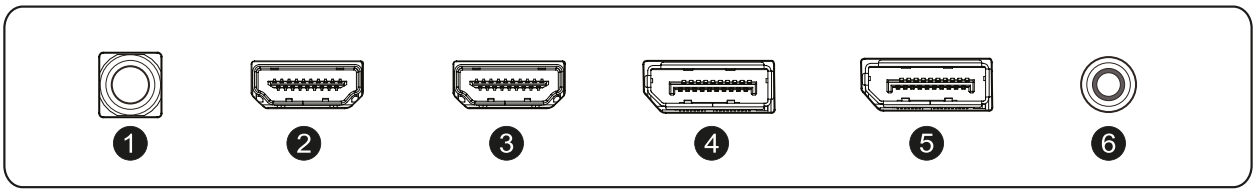

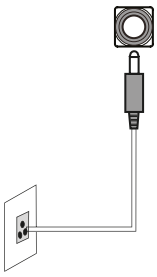

Warning: Always use the appropriate power cord.

1. Power (DC 12V, 4A)
2. HDMI2 (Support QHD 144Hz, HDR, AdaptiveSync ,OD, MPRT)
3. HDMI1 (Support QHD 144Hz, HDR, AdaptiveSync, OD, MPRT)
4. DP2 (Support QHD 180Hz, HDR, AdaptiveSync, OD, MPRT)
5. DP1 (Support QHD 180Hz, HDR, AdaptiveSync, OD, MPRT)
6. Audio Out

© Arozzi Europe AB. 2025

ASSEMBLY WITH STAND

1

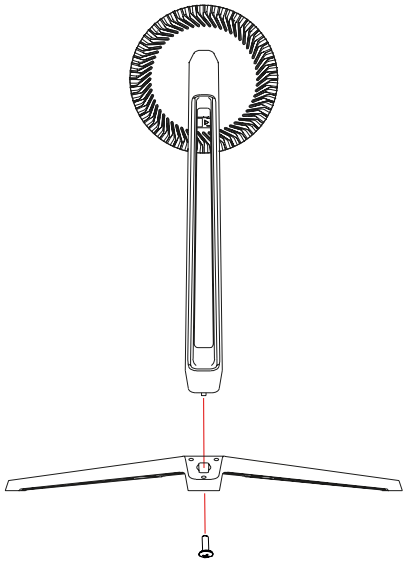

2

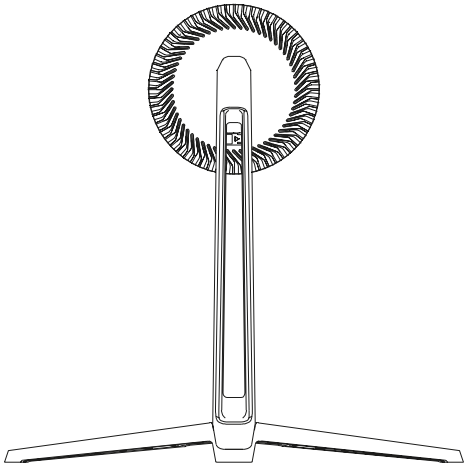

3

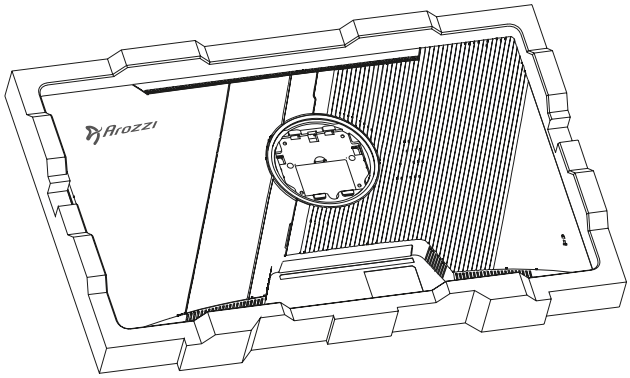

4

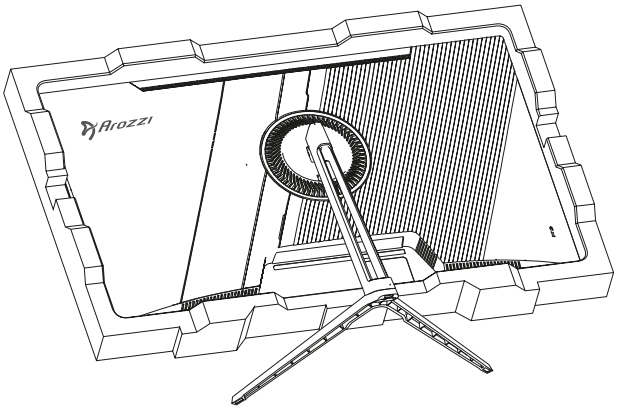

Keep the monitor in the foam until it’s been fully assembled.

ASSEMBLY WITH VESA ADAPTER

1

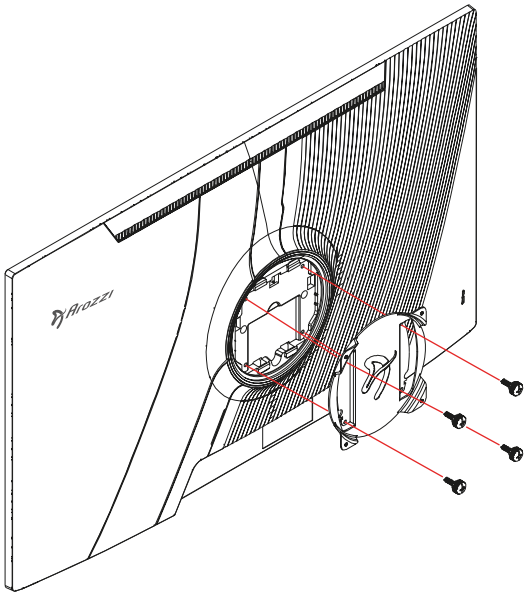

2

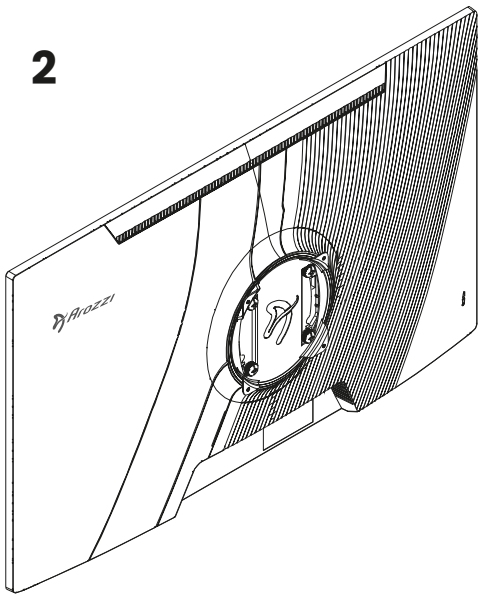

© Arozzi Europe AB. 2025

CONTROL PANEL

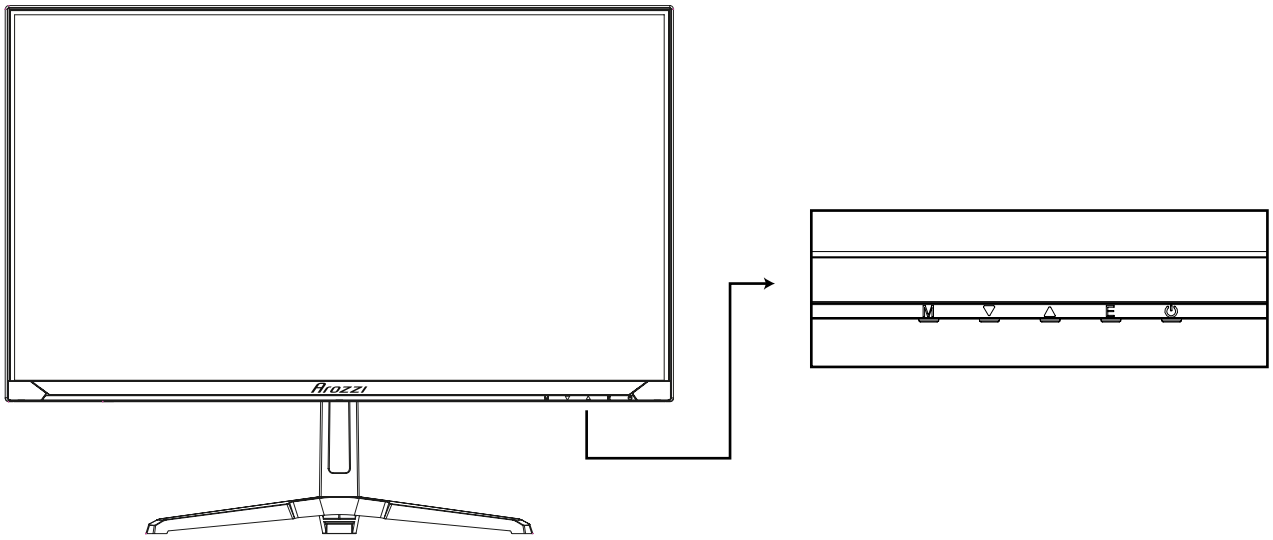

Monitor Button	Action
M	Open the main OSD menu / select submenu.
▼	Go down in the main OSD menu / decrease the value of a selected item / open brightness menu when OSD is not active.
▲	Go up in the main OSD menu / increase the value of a selected item / open scene mode menu when OSD is not active.
E	Select signal source / exit OSD.
⏻	Power ON / OFF the monitor.

© Arozzi Europe AB. 2025

INITIAL SETUP

- Connect the monitor to a power outlet. Check mains rating before plugging the power unit in.
- Press the POWER button on the monitor to turn it on (The indicator will be blue).
- Connect the relevant image signal cable to the corresponding input on the monitor.
  The source will be automatically detected.
- To change between inputs, press the “ E “ button to enter the source menu. Use the ▲ and ▼ buttons to choose the input source between DP1, DP2, HDMI1 and HDMI2.
- If the monitor cannot find a signal on the chosen input, it will auto-select the input where a signal is present.

© Arozzi Europe AB. 2025

OSD MENU

Input Source

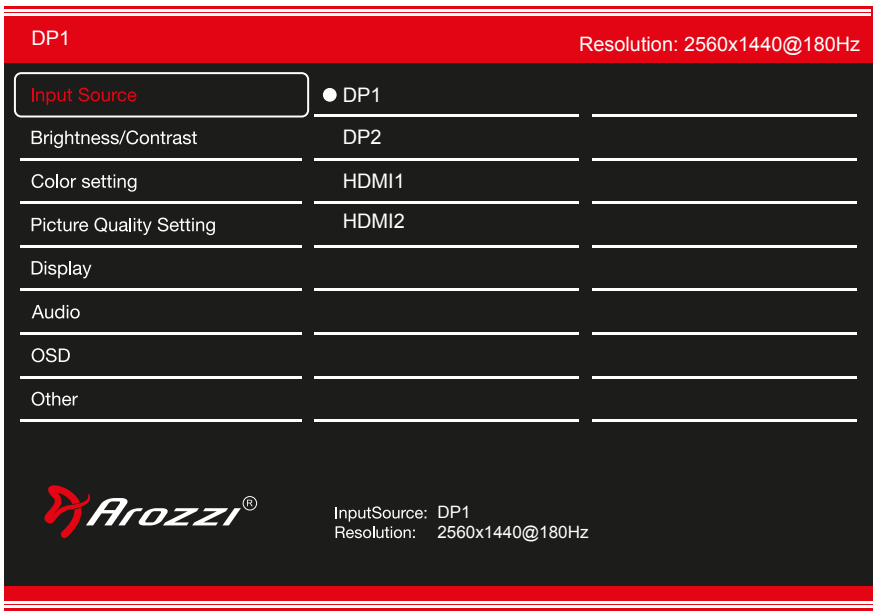

Switch the signal input to DP1/DP2/HDMI1/HDMI2.
No signal results in auto-select.

Brightness / Contrast

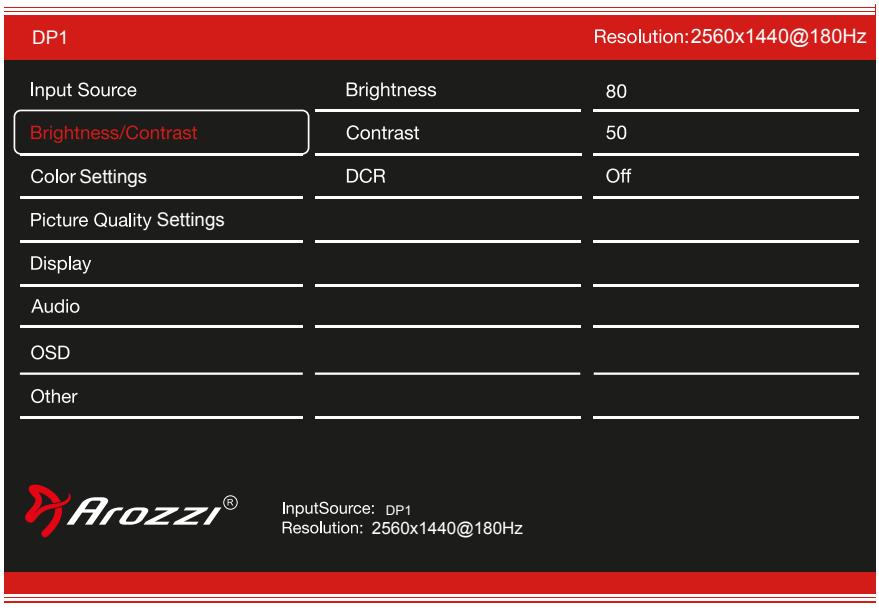

Brightness ..... Change the display Brightness value from 0 to 100.
Contrast ..... Adjust the display Contrast value from 0 to 100.
DCR ..... Turn the Dynamic Contrast Ratio feature On or Off.

© Arozzi Europe AB. 2025

Color Settings

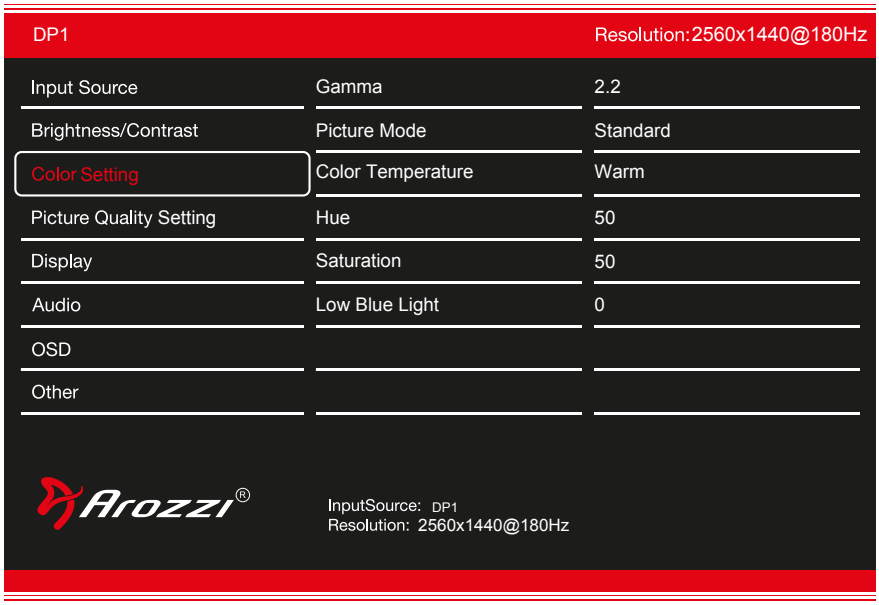

Gamma ..... Change the display Gamma value to: 2.0, 2.2, 2.4.
Picture Mode ..... Change the Picture Mode to: Standard, Photo, Movie, Game, FPS, RTS.
Color Temperature .... Change the Color Temperature to: Normal, Warm, Cool, User.
Hue ..... Change the display Hue value from 0 to 100.
Saturation ..... Change the display Saturation value from 0 to 100.
Low Blue Light ..... Change the display Low Blue Light value from 0 to 100.

Picture Quality Settings

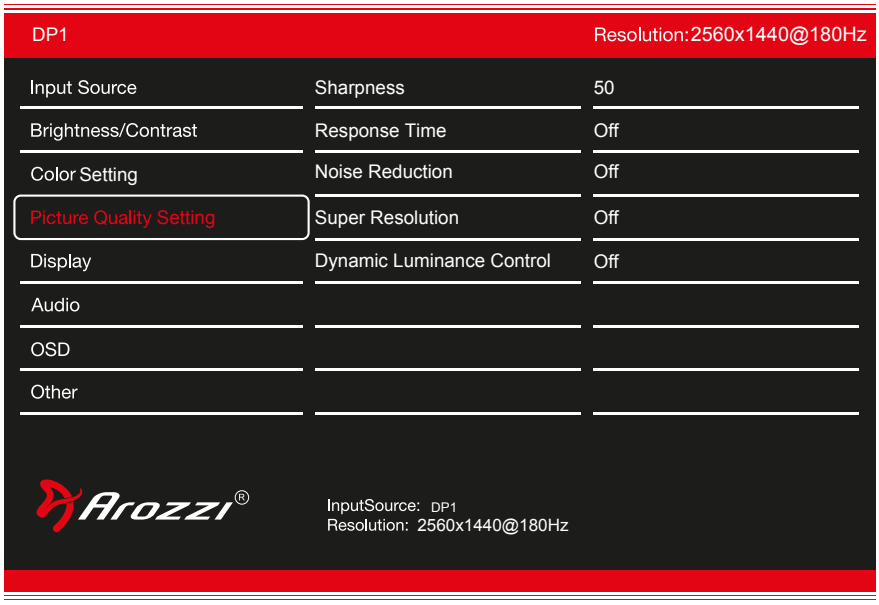

Sharpness ..... Change the display Sharpness value from 0 to 100.
Response Time ..... Select the Response Time value to Low, Middle, High or turn it Off.
Noise Reduction ..... Select the Noise Reduction value to Low, Middle, High or turn it Off.
Super Resolution ..... Select the Super Resolution value to Low, Middle, High or turn it Off.
Dynamic Luminance Control ... Turn the Dynamic Luminance Control feature On or Off.

© Arozzi Europe AB. 2025

Display Settings

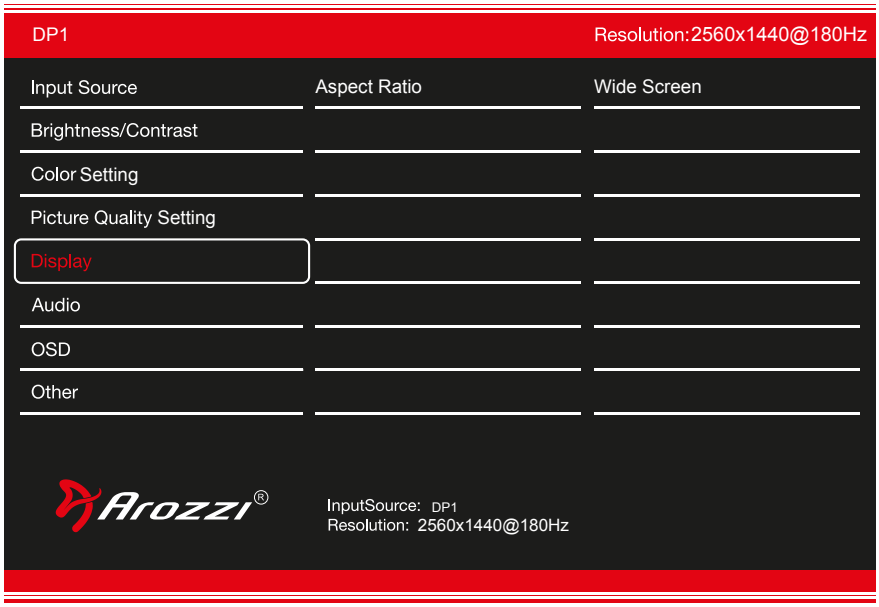

Aspect Ratio ..... Change the image Aspect Ratio to Wide Screen, Auto, 4:3, or 1:1.

Audio Settings

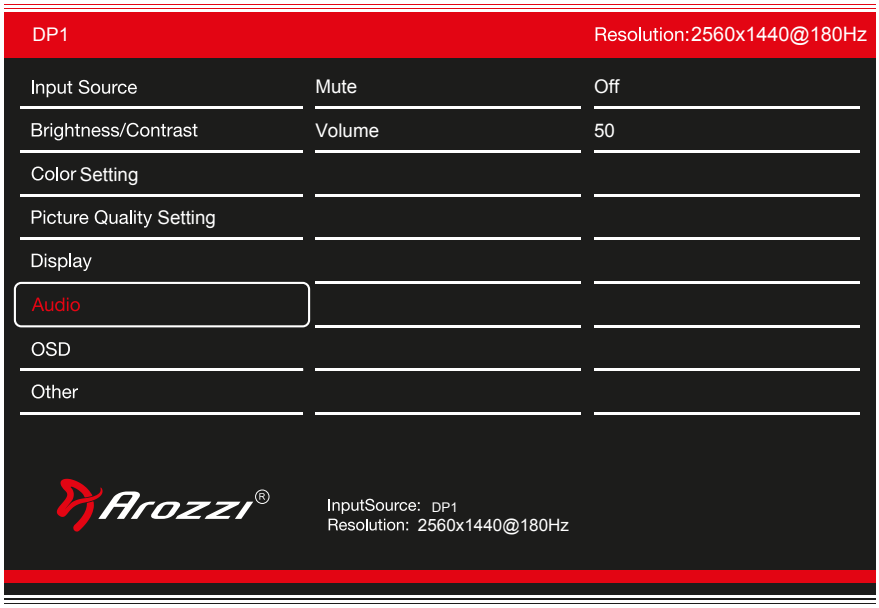

Mute ..... Turn On or Off to mute the audio source.
Volume ..... Change the audio source volume from 0 to 100.

© Arozzi Europe AB. 2025

OSD Settings

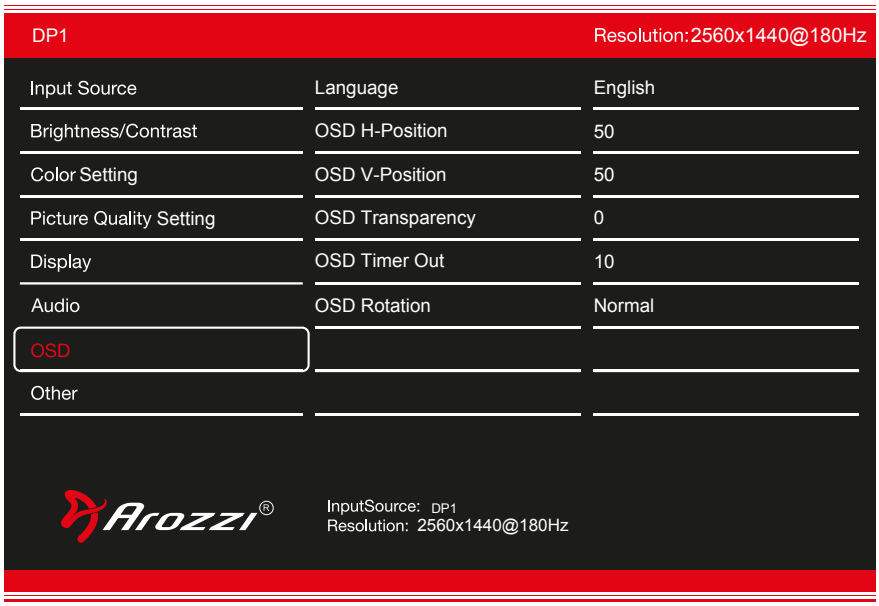

Language ..... Change the OSD Menu display language.
OSD H-Position ..... Change the horizontal position of the OSD Menu.
OSD V-Position ..... Change the vertical position of the OSD Menu.
OSD Transparency ..... Change the transparency value of the OSD Menu from 0 to 100.
OSD Time Out ..... Change how long the OSD Menu is on before it automatically exits.
OSD Rotation ..... Rotate the OSD Menu.

Other Settings

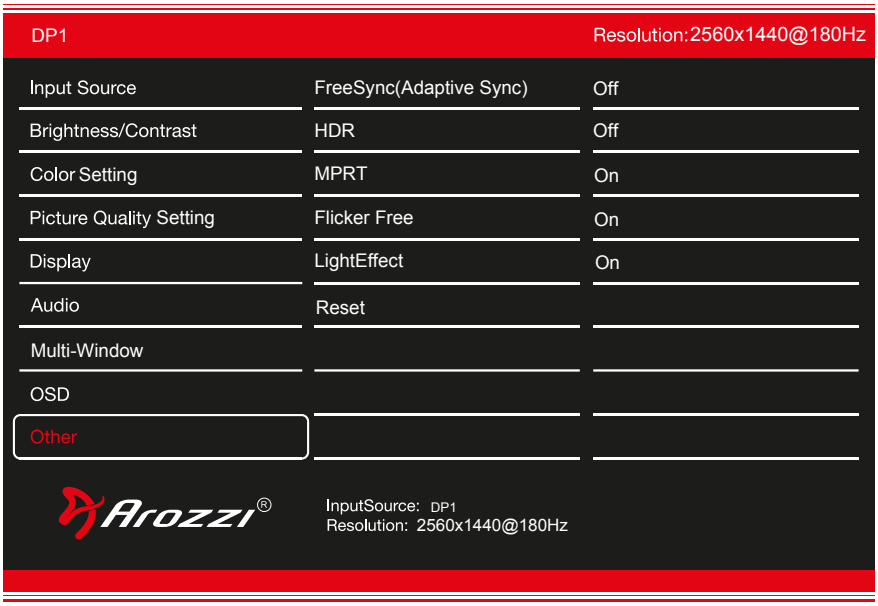

Adaptive Sync ..... Matches the monitor refresh rate to the graphics card framerate
HDR ..... High dynamic range mode. HDR must also be enabled on the PC operating system.
MPRT ..... Reduces motion blur.
Flicker Free ..... Reduces flickering to reduce eye strain
Light Effect ..... Turn On or Off the LED ring on the back of the monitor
Reset ..... Restore the monitor to factory settings.

© Arozzi Europe AB. 2025

SPECIFICATIONS

Display

Screen Size	27”
Panel Type	IPS
Curvature	Flat
Backlight Type	LED
Aspect Ratio	16 : 9
Brightness (Max.)	350 cd/m²
Contrast Ratio (Max.)	1000 : 1
Resolution	2560X1440 @ 180Hz
Response Time (Max.)	MPRT 1ms
Color Gamut	100% sRGB / 90% DCI-P3
Viewing Angle (Horizontal/Vertical)	178°/178° (CR>10) IPS
Color Support	1.07 B Colors (8bit+FRC)

Connections

DP (1.4)	x2 (QHD @ 180Hz)
HDMI (2.0)	x2 (QHD @ 144Hz)
Audio Out 3.5mm	x1

Power

Power Consumption	Typical 45W
Stand By Power (DPMS)	<0.5W
Type	DC12V, 4A

Features

Tilt	+5° to -15°
HDR	Supported
Adaptive Sync	Supported
RGB Light	Color fade on / off
Cabinet Color	Black / White / Pink / Purple / Forest Green
Over Drive	Supported
Flicker Free	Supported
Low Blue Light Mode	Supported
VESA mount	75x75 mm / 100x100 mm (With included adapter)
Speakers	Built-in (2x3W)

© Arozzi Europe AB. 2025