Dell PowerEdge R260

Installation and Service Manual

Regulatory Model: E104S
Regulatory Type: E104S001
July 2025
Rev. A05

DELL Technologies

Notes, cautions, and warnings

NOTE: A NOTE indicates important information that helps you make better use of your product.

CAUTION: A CAUTION indicates either potential damage to hardware or loss of data and tells you how to avoid the problem.

WARNING: A WARNING indicates a potential for property damage, personal injury, or death.

Copyright © 2025 Dell Inc. All Rights Reserved. Dell Technologies, Dell, and other trademarks are trademarks of Dell Inc. or its subsidiaries. Other trademarks may be trademarks of their respective owners.

Contents

Chapter 1: About this document **7**

Chapter 2: PowerEdge R260 system overview **8**
Front view of the system 8
Left control panel view 10
Right control panel view 10
Rear view of the system 11
Inside the system 15
Locating the Express Service Code and Service Tag 20
System information labels 21
Rail sizing and rack compatibility matrix 24

Chapter 3: Technical specifications **25**
Chassis dimensions 26
System weight 26
Processor specifications 27
PSU specifications 27
Cooling fan specifications 28
Supported operating systems 29
System battery specifications 29
Expansion card riser specifications 29
Memory specifications 29
Storage controller specifications 30
Drives 30
Ports and connectors specifications 30
NIC port specifications 30
Serial connector specifications 30
USB ports specifications 31
VGA ports specifications 31
Video specifications 31
Environmental specifications 32
Particulate and gaseous contamination specifications 33
Thermal air restrictions 34
Thermal restriction matrix 34

Chapter 4: Initial system setup and configuration **36**
Setting up the system 36
iDRAC configuration 36
Options to set up iDRAC IP address 36
Options to log in to iDRAC 36
Resources to install operating system 37
Options to download drivers and firmware 37
Options to download and install OS drivers 38
Downloading drivers and firmware 38

Chapter 5: Pre-operating system management applications..... 39
System Setup.....39
System BIOS.....40
iDRAC Settings..... 55
Device Settings.....55
Service Tag Settings..... 55
Dell Lifecycle Controller.....55
Embedded system management.....55
Boot Manager..... 55
PXE boot..... 56

Chapter 6: Minimum to POST 57
Minimum configuration to POST 57

Chapter 7: Configuration validation..... 58
Error messages..... 59

Chapter 8: Disassembly and reassembly..... 60
Safety instructions.....60
Before working inside your system 60
After working inside your system.....61
Recommended tools.....61
Optional front bezel.....61
Removing the front bezel.....61
Installing the front bezel..... 62
System cover..... 63
Removing the system cover..... 63
Installing the system cover..... 64
Air shroud.....66
Removing the air shroud.....66
Installing the air shroud.....67
Cooling fans.....69
Removing the cooling fan.....69
Installing a cooling fan.....69
Intrusion switch..... 71
Removing the intrusion switch.....71
Installing the intrusion switch.....71
Drive backplane.....72
Drive backplane guidelines.....72
Removing the front drive bay backplane..... 73
Installing the front drive bay backplane..... 74
Cable routing..... 76
Drives..... 84
Removing a drive blank..... 84
Installing a drive blank..... 84
Removing a drive carrier.....85
Removing the drive from the drive carrier.....86
Installing a drive into the drive carrier..... 87

Installing a drive carrier....88
Removing a 3.5 inch cabled hard drive....89
Installing a 3.5 inch cabled hard drive....90
System memory....91
System memory guidelines....91
General memory module installation guidelines....92
Removing a memory module....94
Installing a memory module....94
Processor and heat sink module....95
Removing the heat sink module....95
Removing the processor....96
Installing the processor....97
Installing the processor and heat sink module....99
Expansion cards and expansion card risers....100
Expansion card installation guidelines....100
Removing an expansion card riser....102
Removing an expansion card from the riser....103
Installing the expansion card in to the expansion card riser....104
Installing an expansion card riser....106
Optional BOSS-N1 module....106
Removing the BOSS N1 blank....106
Installing the BOSS N1 blank....107
Removing the BOSS-N1 module....108
Installing the BOSS-N1 module....110
System battery....113
Replacing the system battery....113
PERC card....114
Removing the internal PERC card....114
Installing the internal PERC card....115
Power supply units....116
Removing a cabled power supply unit (PSU)....116
Installing a cabled power supply unit (PSU)....117
Removing a non cabled power supply unit (PSU)....118
Installing a non cabled power supply unit....119
Power interposer board (PIB)....120
Removing the PIB....120
Installing the PIB....121
System board....122
Removing the system board....122
Installing the system board....123
Restoring the system using Easy Restore....124
Manually update the Service Tag....125
Trusted Platform Module....125
Upgrading the Trusted Platform Module....125
Initializing TPM for users....126
Initializing the TPM 2.0 for users....126
Control panel....127
Removing the right control panel....127
Installing the right control panel....128
Removing the left control panel....128

Installing the left control panel....129

Chapter 9: Upgrade Kits....131
BOSS-N1 module kit....131
PCIe riser kit....132
Filter bezel kit....132

Chapter 10: Jumpers and connectors....135
System board jumpers and connectors....135
System board jumper settings....136
Disabling a forgotten password....137

Chapter 11: System diagnostics and indicator codes....138
System health and system ID indicator codes....138
iDRAC Direct LED indicator codes....139
NIC indicator codes....139
Power supply unit indicator codes....140
Drive indicator codes....141
Power button LED....142
Using system diagnostics....142
Dell Embedded System Diagnostics....142

Chapter 12: Getting help....144
Recycling or End-of-Life service information....144
Contacting Dell Technologies....144
Accessing system information by using QR code....144
QR code for PowerEdge R260 system resources....145
Receiving automated support with Secure Connect Gateway (SCG)....145

Chapter 13: Documentation resources....147

1

About this document

This document provides an overview about the system, information about installing and replacing components, diagnostic tools, and guidelines to be followed while installing certain components.

2

PowerEdge R260 system overview

The PowerEdge R260 system is a 1U server that supports:

- One Intel® Xeon® 6300 series processor or one Intel® Xeon® E-2400 series processor with up to eight cores or one Intel® Pentium® processor with two cores
- Four ECC DDR5 DIMM slots
- One non-cabled AC or DC power supply unit or One cabled AC power supply unit
- Up to 6 x 2.5-inch SAS/SATA (HDD/SSD) drives or up to 4 x 2.5-inch SATA (HDD/SSD) drives or up to 2 x 3.5-inch SAS/SATA (HDD) drives

NOTE: All instances of SAS, SATA drives are referred to as drives in this document, unless specified otherwise.

NOTE: The Dell PowerEdge R260 system supports speeds of 12 Gbps for SAS3 and 6 Gbps for SATA. The drive speed is determined by the controller's capability.

CAUTION: Do not install GPUs, network cards, or other PCIe devices on your system that are not validated and tested by Dell. Damage caused by unauthorized and invalidated hardware installation will null and void the system warranty.

Topics:

- Front view of the system
- Rear view of the system
- Inside the system
- Locating the Express Service Code and Service Tag
- System information labels
- Rail sizing and rack compatibility matrix

Front view of the system

Figure 1. Front view of 2 x 3.5-inch drive system

Table 1. Features are available on the front of the system for a 3.5-inch drive system

Item	Ports, panels, and slots	Icon	Description
1	Left control panel	N/A	Contains the system health, system ID, and the status LED indicator.
2	3.5-inch drive	N/A	Enables you to install drives that are supported on your system.

Table 1. Features are available on the front of the system for a 3.5-inch drive system (continued)

Item	Ports, panels, and slots	Icon	Description
			NOTE: For drive slot numbers, see the system information label section.
3	Right control panel	N/A	Contains the Power button, USBB 2.0 port, and iDRAC direct Micro USB support .

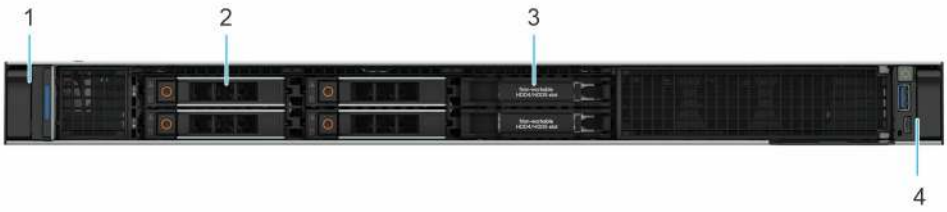

Figure 2. Front view of 4 x 2.5-inch drive system

Table 2. Features are available on the front of the system for a 2.5-inch drive system

Item	Ports, panels, and slots	Icon	Description
1	Left control panel	N/A	Contains the system health, system ID, and the status LED indicator.
2	2.5-inch drive	N/A	Enables you to install drives that are supported on your system. **NOTE:** For drive slot numbers, see the system information label section.
3	Non-workable HDD4/HDD5 slot	N/A	The non-workable slots are populated with drive blanks.
4	Right control panel	N/A	Contains the Power button, USB 2.0 port and iDRAC direct Micro USB port.

Figure 3. Front view of 6 x 2.5-inch drive system

Table 3. Features are available on the front of the system for a 2.5-inch drive system

Item	Ports, panels, and slots	Icon	Description
1	Left control panel	N/A	Contains the system health, system ID, and the status LED indicator.
2	2.5-inch drive	N/A	Enables you to install drives that are supported on your system. **NOTE:** For drive slot numbers, see the system information label section.
3	Right control panel	N/A	Contains the Power button, USB 2.0 port and iDRAC direct Micro USB port.

Left control panel view

Figure 4. Left control panel

Table 4. Left control panel

Item	Indicator, button, or connector	Icon	Description
1	System health and system ID		Indicates the system health. For more information, see the System health and system ID indicator code section.

NOTE: For more information about the indicator codes, see the System diagnostics and indicator codes section.

Right control panel view

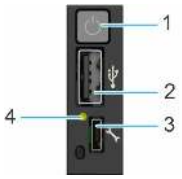

Figure 5. Right control panel

Table 5. Right control panel

Item	Indicator or button	Icon	Description
1	Power button	⏻	Indicates if the system is powered on or off. Press the power button to manually power on or off the system. **NOTE:** Press the power button to gracefully shut down an ACPI-compliant operating system.

Table 5. Right control panel (continued)

Item	Indicator or button	Icon	Description
2	USB 2.0 port		The USB port is 4-pin, 2.0-compliant. This port enables you to connect USB devices to the system.
3	iDRAC Direct (Micro-AB USB) port		The iDRAC Direct (Micro-AB USB) port enables you to access the iDRAC direct Micro-AB USB features. For more information, see the *Integrated Dell Remote Access Controller User's Guide* at PowerEdge Manuals. **NOTE:** You can configure iDRAC Direct by using a USB to micro USB (type AB) cable, which you can connect to your laptop or tablet. Cable length should not exceed 3 feet (0.91 meters). Performance could be affected by cable quality.
4	iDRAC Direct LED	N/A	Indicates that the iDRAC Direct port is connected

NOTE: For more information about ports, panels, and slots, see the Technical specification section.

Rear view of the system

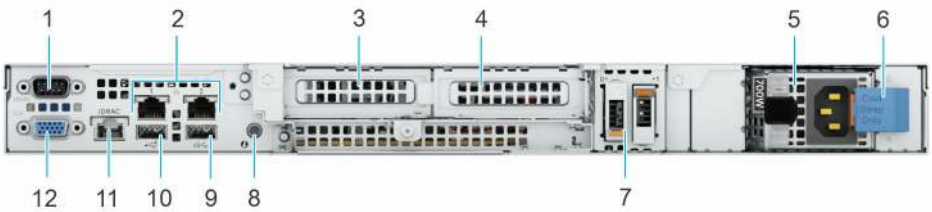

Figure 6. Rear view of the system with non-cabled PSU

Table 6. Features available on the rear of the system

Item	Ports, panels, or slots	Icon	Description
1	Serial port		Enables you to connect a serial device to the system.
2	NIC ports		The NIC ports that are integrated on the system board provide network connectivity.
3	PCIe expansion riser card slot 1	N/A	The expansion card riser enables you to connect PCI Express expansion cards.For more information, see the Expansion card installation guidelines section.
4	PCIe expansion riser card slot 2	N/A	The expansion card riser enables you to connect PCI Express expansion cards.For more information, see the Expansion card installation guidelines section.
5	Power supply unit , non-cabled (PSU)	1	Indicates the PSU.

Table 6. Features available on the rear of the system (continued)

Item	Ports, panels, or slots	Icon	Description
6	PSU lock for non-cabled PSU	N/A	Lock needs to be removed to take out the PSU
7	BOSS-N1 module	N/A	BOSS-N1 module for internal system boot.
8	System Identification (ID) button		The System Identification (ID) button is available on the front and back of the system. Press the button to identify a system in a rack by turning on the system ID button. You can also use the system ID button to reset iDRAC and to access BIOS using the step through mode. When pressed, the system ID LED in the back panel blinks until either the front or rear button is pressed again. Press the button to toggle between on or off mode. **NOTE:** If the server stops responding during POST, press and hold the **System ID** button for more than five seconds to enter the BIOS progress mode. **NOTE:** To reset the iDRAC (if not disabled on the iDRAC setup page by pressing F2 during system boot), press and hold the **System ID** button for more than 15 seconds.
9	USB 3.2 Gen1 port		This port is USB 3.2 Gen1-compliant.
10	USB 2.0 port		This port is USB 2.0-compliant.
11	Dedicated iDRAC Ethernet port	iDRAC	Enables you to remotely access iDRAC. For more information, see the Integrated *Dell Remote Access Controller User's Guide* at PowerEdge Manuals.
12	VGA port		Enables you to connect a display device to the system.

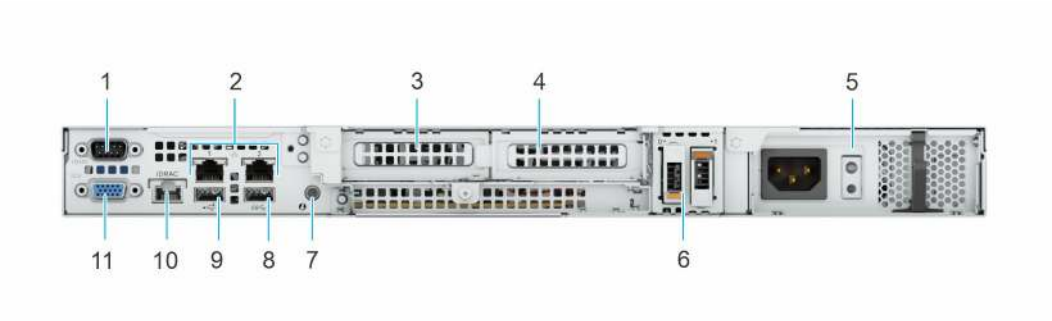

Figure 7. Rear view of the system with cabled PSU

Table 7. Features available on the rear of the system

Item	Ports, panels, or slots	Icon	Description
1	Serial port		Enables you to connect a serial device to the system.
2	NIC ports		The NIC ports that are integrated on the system board provide network connectivity.
3	PCIe expansion riser card slot 1	N/A	The expansion card riser enables you to connect PCI Express expansion cards.For more information, see the Expansion card installation guidelines section.
4	PCIe expansion riser card slot 2	N/A	The expansion card riser enables you to connect PCI Express expansion cards.For more information, see the Expansion card installation guidelines section.
5	Power supply unit , cabled (PSU)		Indicates the PSU.
6	BOSS-N1 module	N/A	BOSS-N1 module for internal system boot.
7	System Identification (ID) button		The System Identification (ID) button is available on the front and back of the system. Press the button to identify a system in a rack by turning on the system ID button. You can also use the system ID button to reset iDRAC and to access BIOS using the step through mode. When pressed, the system ID LED in the back panel blinks until either the front or rear button is pressed again. Press the button to toggle between on or off mode. **NOTE:** If the server stops responding during POST, press and hold the **System ID** button for

Table 7. Features available on the rear of the system (continued)

Item	Ports, panels, or slots	Icon	Description
			more than five seconds to enter the BIOS progress mode. **NOTE:** To reset the iDRAC (if not disabled on the iDRAC setup page by pressing F2 during system boot), press and hold the **System ID** button for more than 15 seconds.
8	USB 3.2 Gen1 port		This port is USB 3.2 Gen1-compliant.
9	USB 2.0 port		This port is USB 2.0-compliant.
10	Dedicated iDRAC Ethernet port	iDRAC	Enables you to remotely access iDRAC. For more information, see the Integrated Dell Remote Access Controller User's Guide at PowerEdge Manuals.
11	VGA port		Enables you to connect a display device to the system.

Inside the system

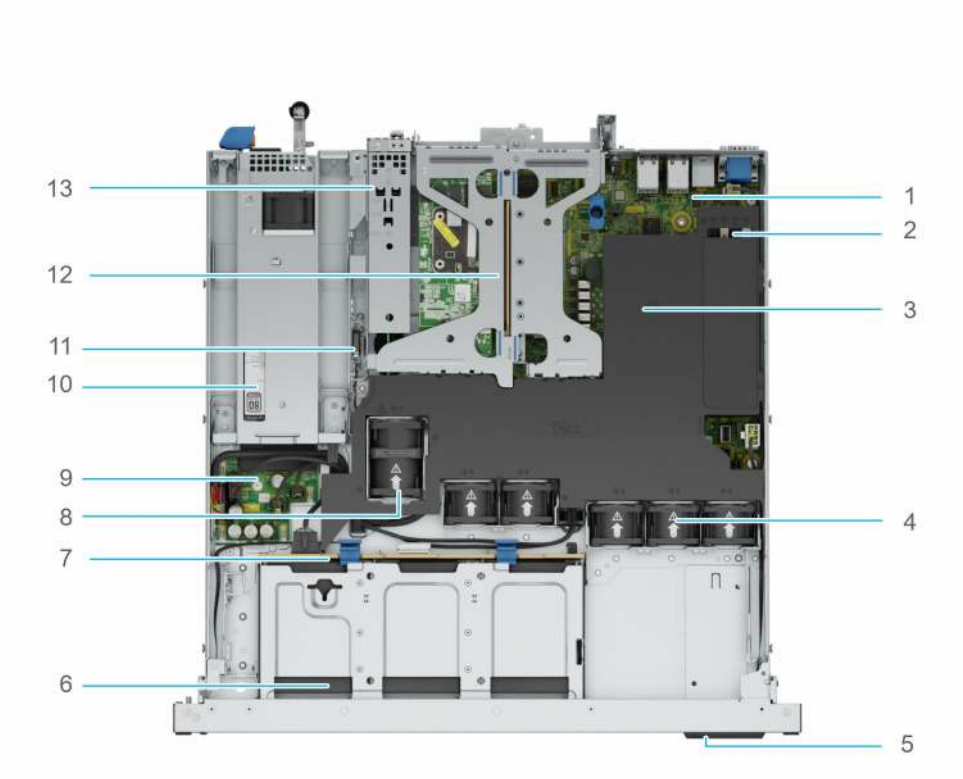

Figure 8. Inside view of the system with non-cabled PSU and 2.5 inch drives with air shroud and riser

1. System board
2. DIMM slots
3. Air shroud
4. Standard (STD) cooling fans
5. Express Service Code Tag
6. Front drives
7. Drive backplane
8. High Performance (HPR) fan - Optional
9. Power Interposer board (PIB)
10. Power supply unit (non-cabled)
11. Intrusion switch
12. Butterfly Riser with 2x PCIe slots
13. BOSS N1 module

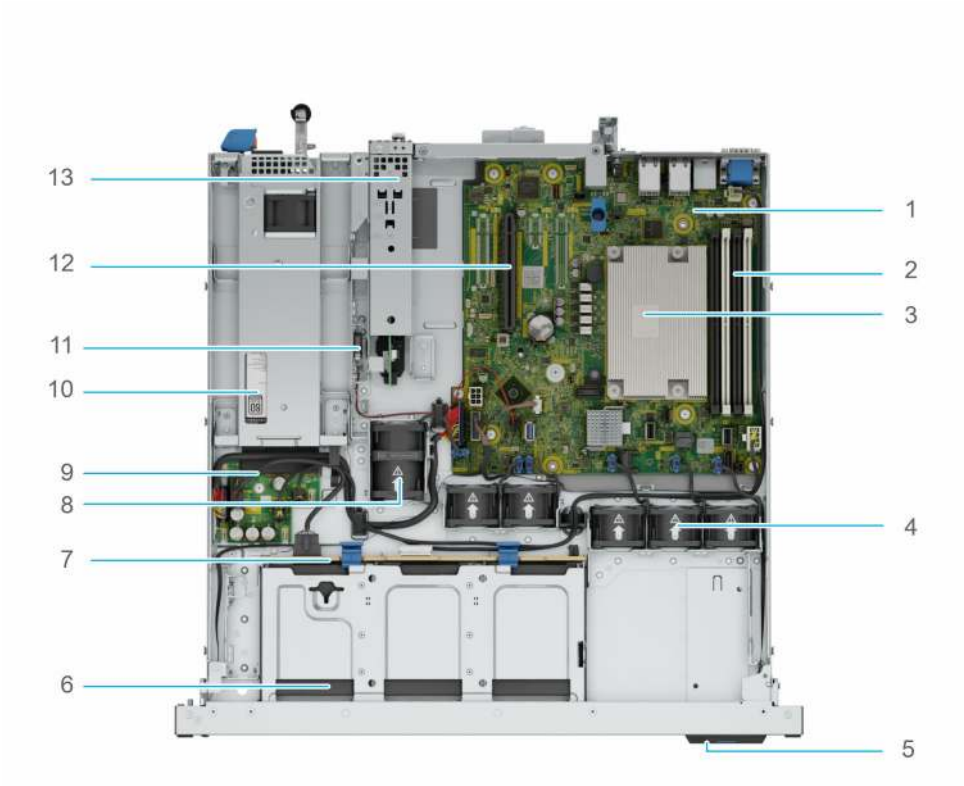

Figure 9. Inside view of the system with non-cabled PSU and 2.5 inch drives without air shroud and riser

1. System board
2. DIMM slots
3. Processor heatsink
4. Standard (STD) cooling fans
5. Express Service Code Tag
6. Front drives
7. Drive backplane
8. High Performance (HPR) fan - Optional
9. Power Interposer board (PIB)
10. Power supply unit (non-cabled)
11. Intrusion switch
12. PCIe riser slot
13. BOSS N1 module

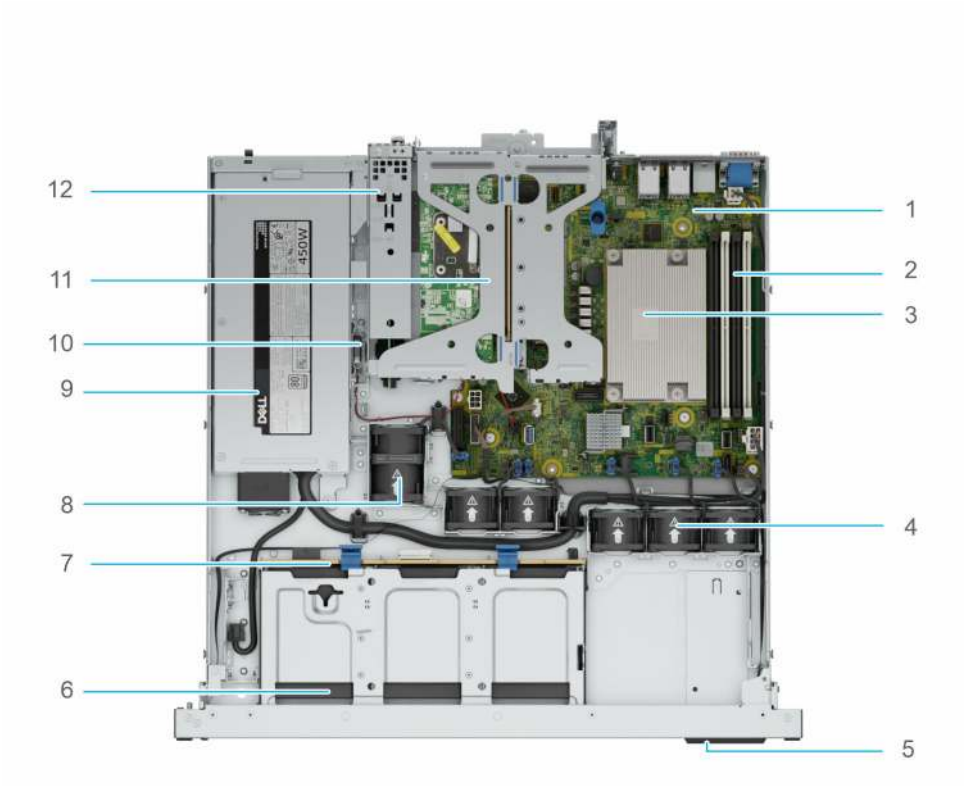

Figure 10. Inside view of the system with cabled PSU and 2.5 inch drives without air shroud

1. System board
2. DIMM slots
3. Processor heatsink
4. Standard (STD) cooling fans
5. Express Service Code Tag
6. Front drives
7. Drive backplane
8. High Performance (HPR) fan - Optional
9. Power supply unit (cabled)
10. Intrusion switch
11. Butterfly Riser with 2x PCIe slots
12. BOSS N1 module

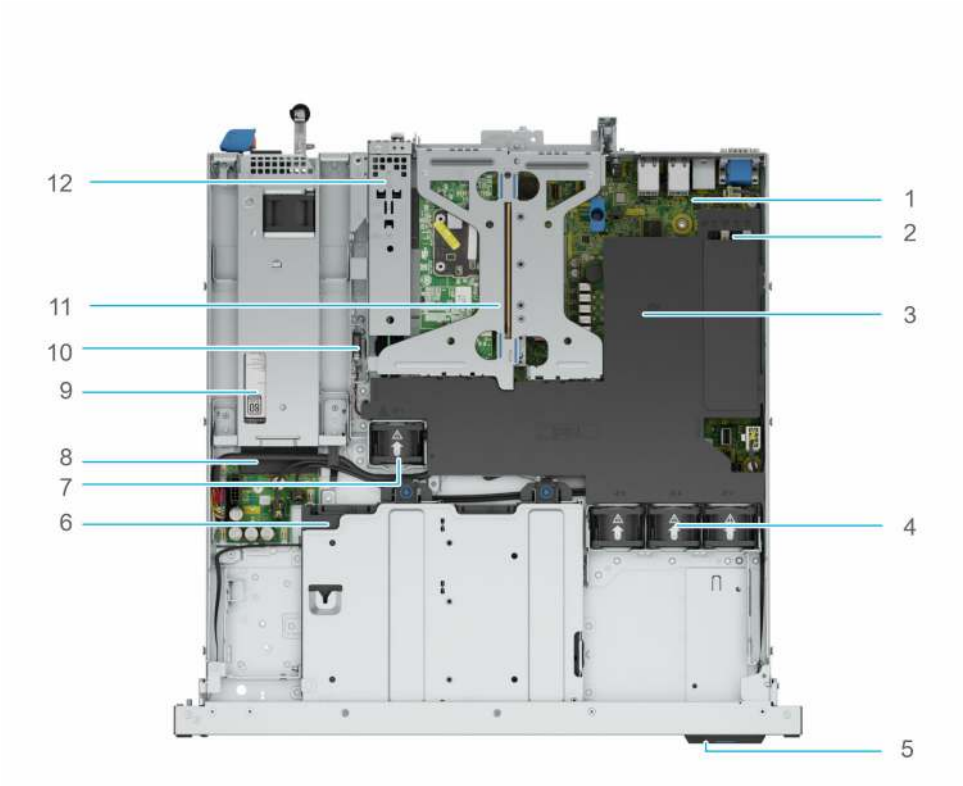

Figure 11. Inside view of the system with non-cabled PSU and 3.5 inch drives with air shroud and riser

1. System board
2. DIMM slots
3. Air shroud
4. Standard (STD) cooling fans
5. Express Service Code Tag
6. Front drives
7. Standard (STD) cooling fan
8. Power Interposer board (PIB)
9. Power supply unit (non-cabled)
10. Intrusion switch
11. Butterfly Riser with 2x PCIe slots
12. BOSS N1 module

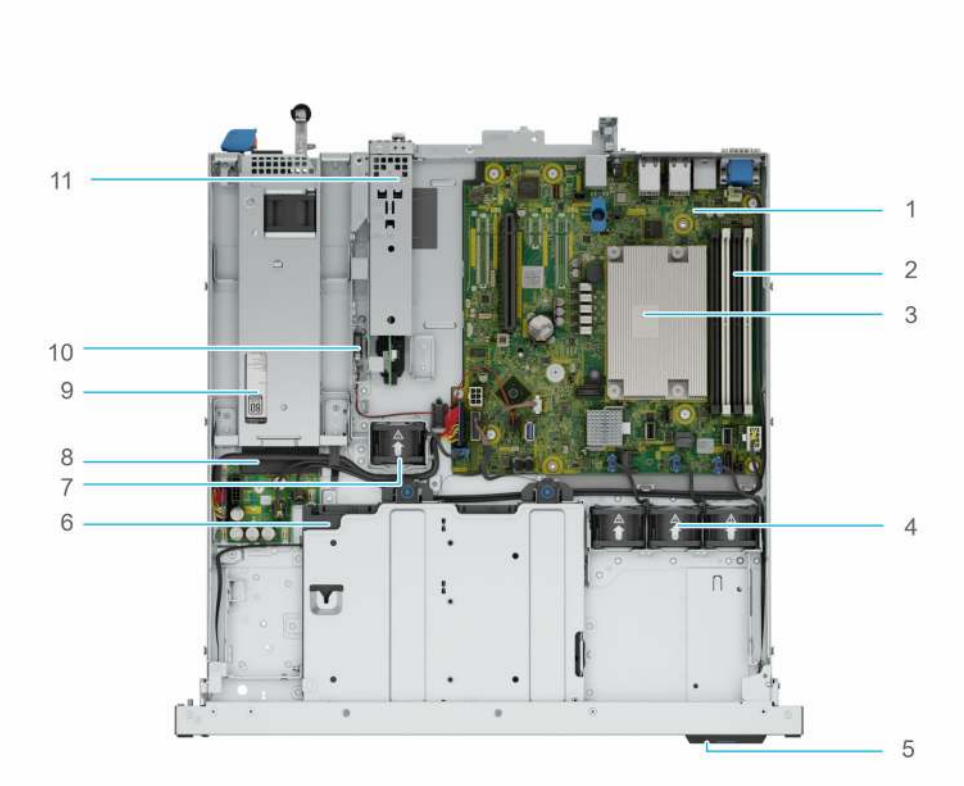

Figure 12. Inside view of the system with non-cabled PSU and 3.5 inch drives with air shroud and riser

1. System board
2. DIMM slots
3. Processor heatsink
4. Standard (STD) cooling fans
5. Express Service Code Tag
6. Front drives
7. Standard (STD) cooling fan
8. Power Interposer board (PIB)
9. Power supply unit (non-cabled)
10. Intrusion switch
11. PCIe riser slot
12. BOSS N1 module

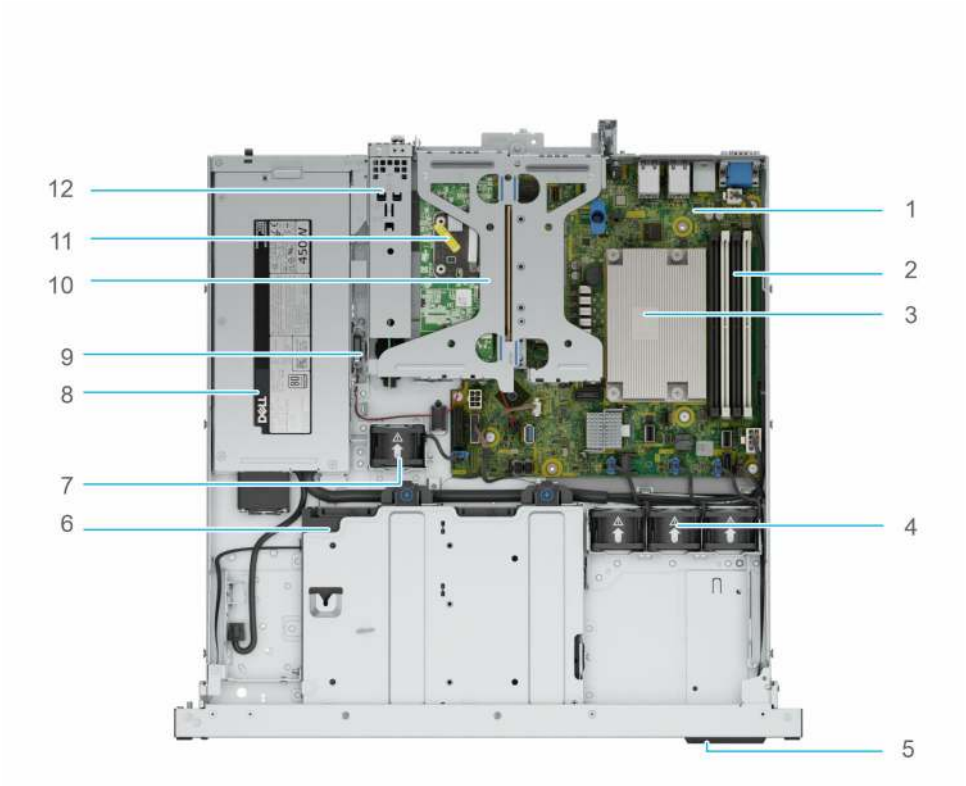

Figure 13. Inside view of the system with cabled PSU and 3.5 inch drives without air shroud

1. System board
2. DIMM slots
3. Processor heatsink
4. Standard (STD) cooling fans
5. Express Service Code Tag
6. Front drives
7. Standard (STD) cooling fan
8. Power supply unit (cabled)
9. Intrusion switch
10. Butterfly Riser with 2x PCIe slots
11. BOSS N1 module

Locating the Express Service Code and Service Tag

The unique Express Service Code and Service Tag are used to identify the system.

The information tag is located on the front of the system that includes system information such as the Service Tag, Express Service Code, Manufacture date, NIC, MAC address, QR code, and so on. If you have opted for the secure default access to iDRAC, the Information tag also contains the iDRAC secure default password.

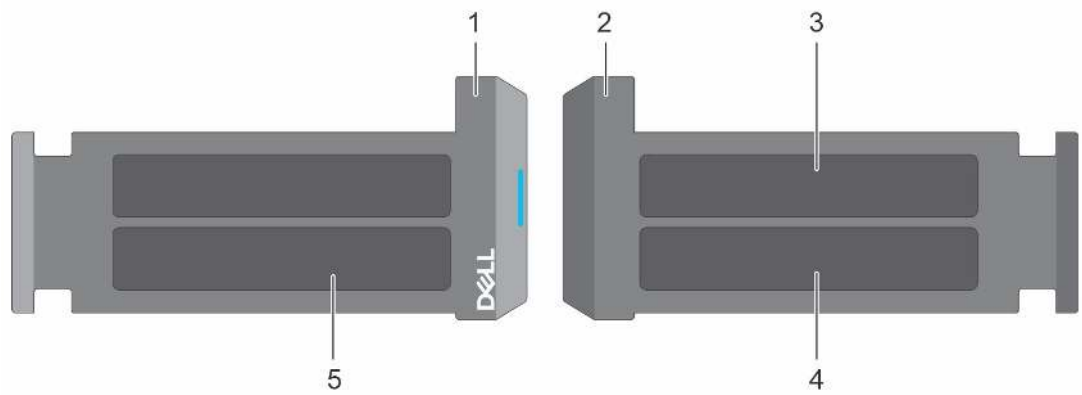

Figure 14. Locating the Express Service Code and Service tag

1. Information tag (front view)

2. Information tag (back view)
3. iDRAC MAC address and iDRAC secure password label
4. Service Tag, Express Service Code, QR code

The Mini Enterprise Service Tag (MEST) label is on the rear of the system that includes the Service Tag (ST), and Express Service Code (Exp Svc Code). The Exp Svc Code is used by Dell to route support calls to the appropriate personnel.

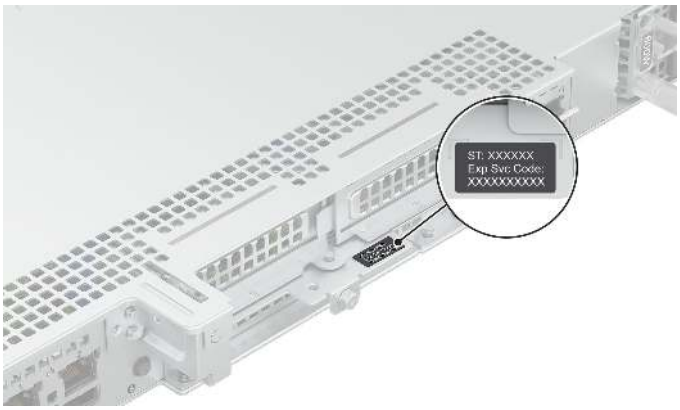

Figure 15. Locating the Mini Express Service Tag

System information labels

The system information label is on the back of the system cover.

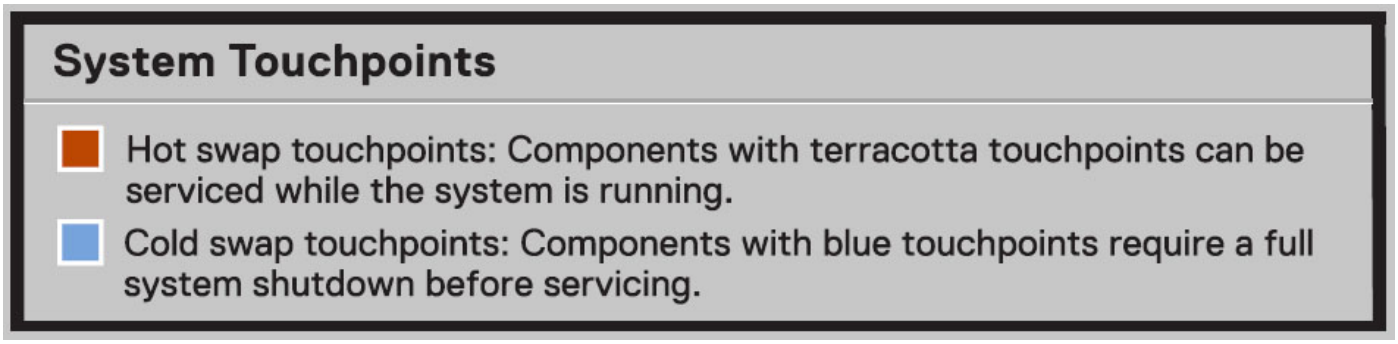

Figure 16. System Touchpoints

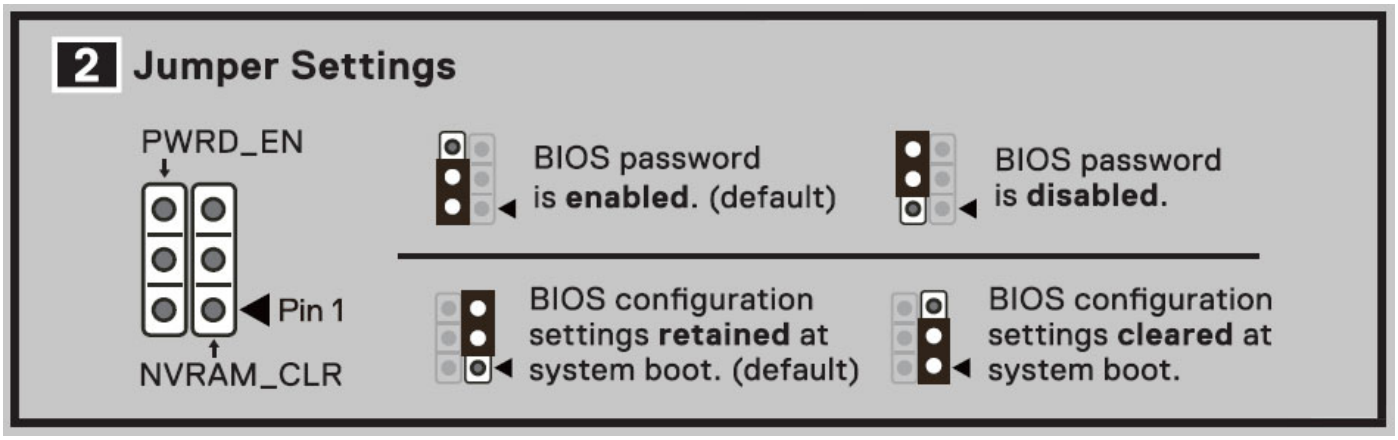

Figure 17. Jumper Settings

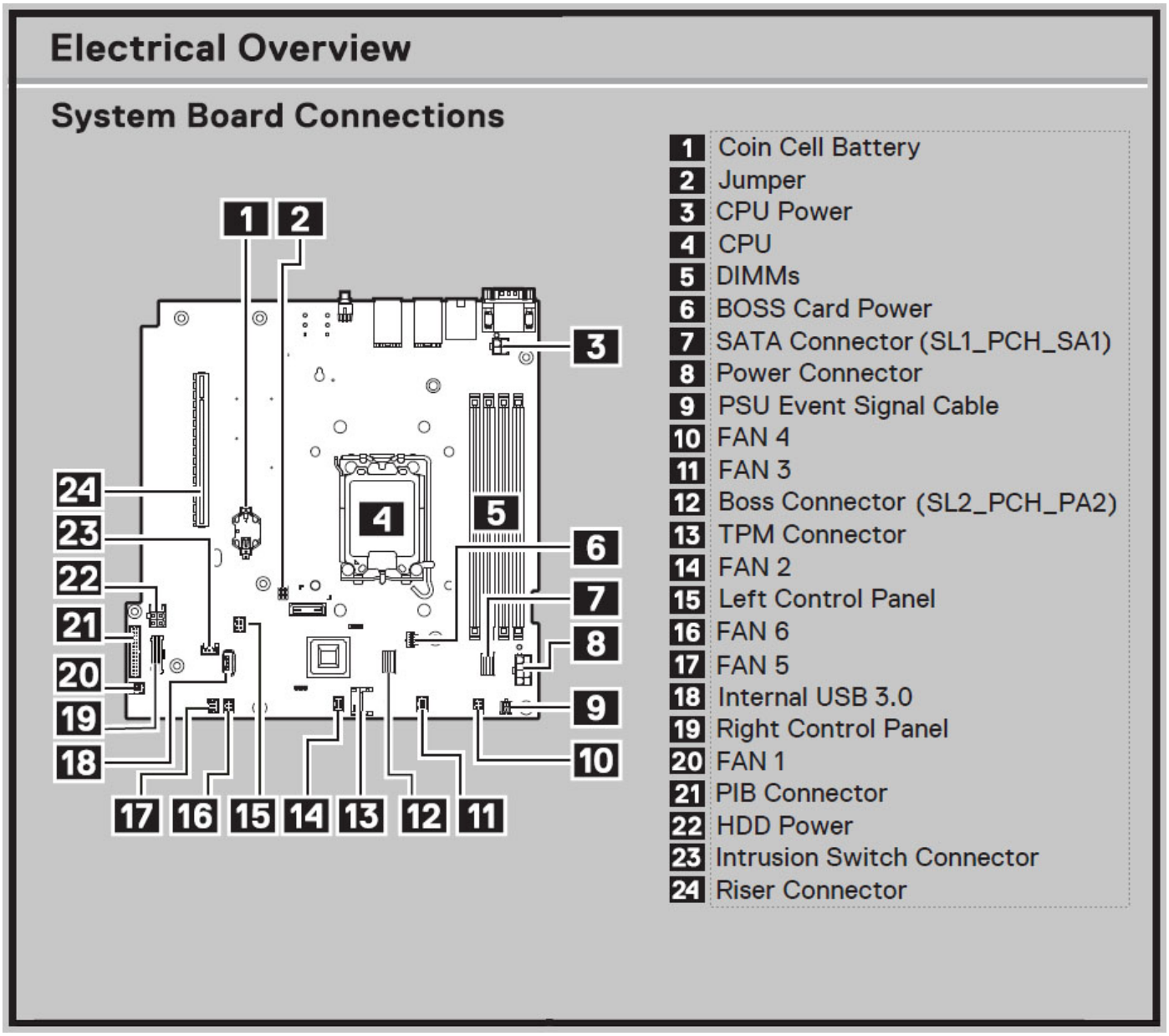

Figure 18. Electrical Overview

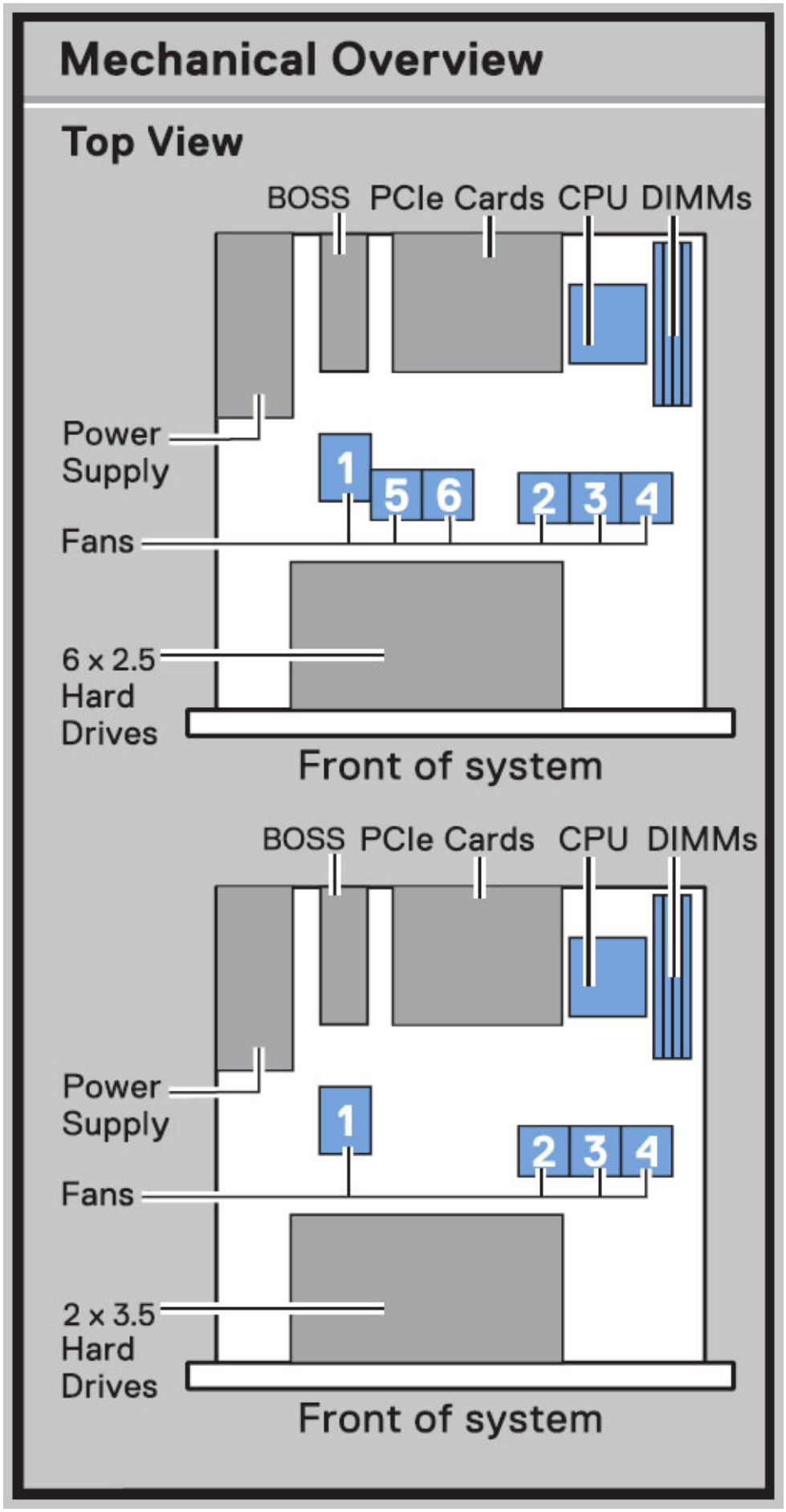

Figure 19. Mechanical Overview

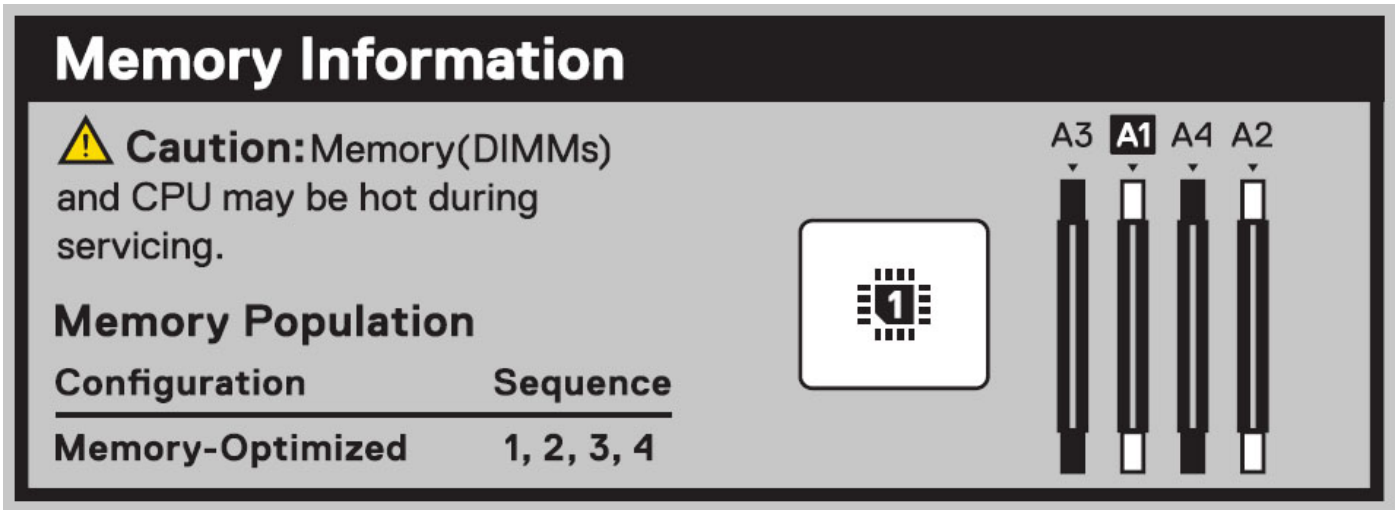

Figure 20. Memory Information

Rail sizing and rack compatibility matrix

For specific information about the rail solutions compatible with your system, see the Dell Enterprise Systems Rail Sizing and Rack Compatibility Matrix.

The document provides the information that is listed below:

- Specific details about rail types and their functionalities.
- Rail adjustability range for various types of rack mounting flanges.
- Rail depth with and without cable management accessories.
- Types of racks that are supported for various types of rack mounting flanges.

3

Technical specifications

The technical and environmental specifications of your system are outlined in this section.

Topics:

- Chassis dimensions
- System weight
- Processor specifications
- PSU specifications
- Cooling fan specifications
- Supported operating systems
- System battery specifications
- Expansion card riser specifications
- Memory specifications
- Storage controller specifications
- Drives
- Ports and connectors specifications
- Video specifications
- Environmental specifications

Chassis dimensions

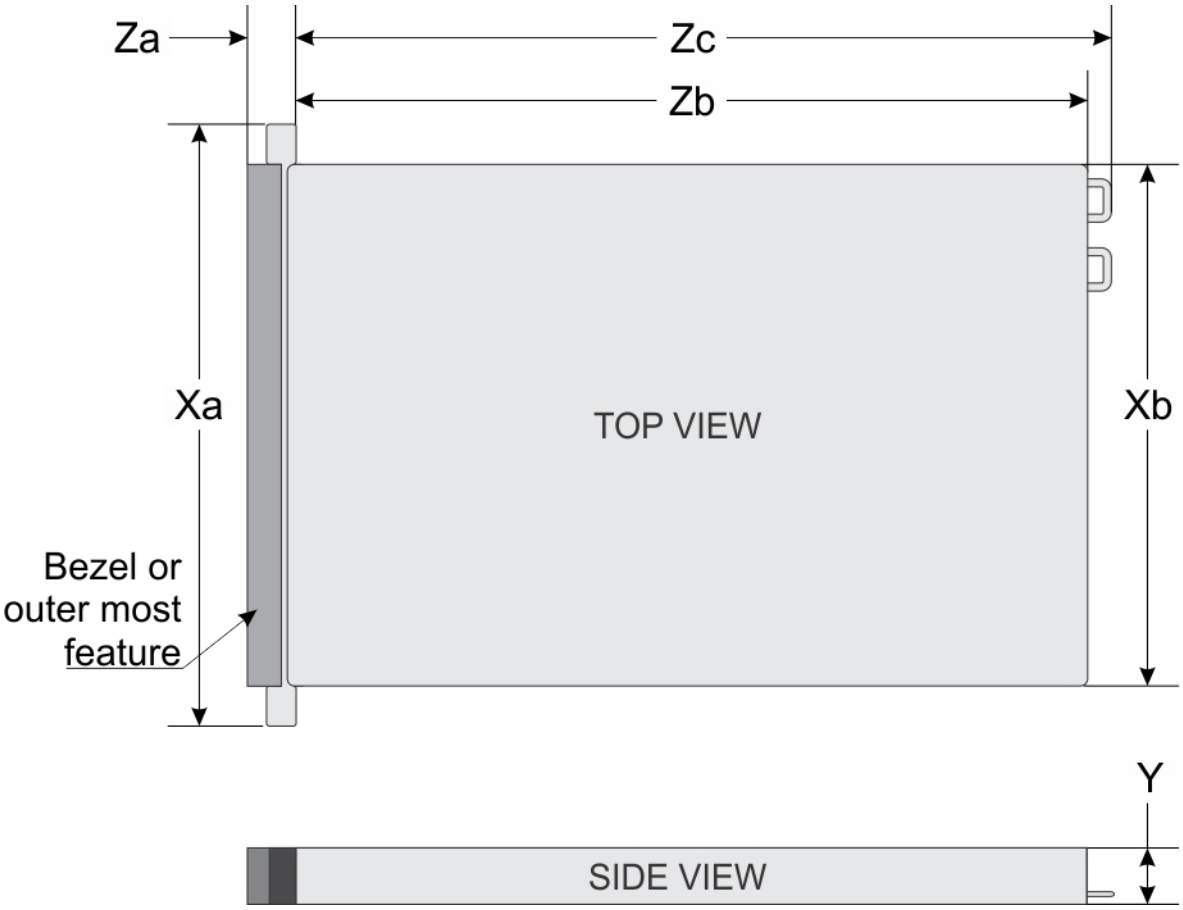

Figure 21. Chassis dimensions

Table 8. PowerEdge R260 chassis dimensions

Drives	Xa	Xb	Y	Za	Zb	Zc
6 drives 2.5 - inch	482.0 mm (18.976 inches)	434.0 mm (17.086 inches)	42.8 mm (1.685 inches)	With bezel 35.6 mm (1.401 inches)Without bezel 22.0 mm (0.866inches)	426.6 mm (16.795 inches)	461.14 mm 18.155 inches)
2 drives 3.5 - inch	482.0 mm (18.976 inches)	434.0 mm (17.086 inches)	42.8 mm (1.685 inches)	With bezel 35.6 mm (1.401 inches)Without bezel 22.0 mm (0.866inches)	426.6 mm (16.795 inches)	461.14 mm 18.155 inches)

NOTE: Zb is the nominal rear wall external surface where the system board I/O connectors reside.

System weight

Table 9. PowerEdge R260 system weight

System configuration	Maximum weight (with all drives/SSDs)	
A server with fully populated drives and redundant PSU	2.5-inch drives	9.60 kg (21.16 pounds)

Table 9. PowerEdge R260 system weight (continued)

System configuration	Maximum weight (with all drives/SSDs)	
	3.5-inch drives	9.61 kg (21.18 pounds)
A server with fully populated drives and cable PSU	2.5-inch drives	9.44 kg (20.81 pounds)
	3.5-inch drives	9.45 kg (20.83 pounds)
A server without drives and redundant PSU installed	2.5-inch drives	7 kg (15.43 pounds)
	3.5-inch drives	6.98 kg (15.38 pounds)
A server without drives and cable PSU installed	2.5-inch drives	6.79 kg (14.96 pounds)
	3.5-inch drives	6.81 kg (15.01 pounds)

Processor specifications

Table 10. PowerEdge R260 processor specifications

Supported processor	Number of processors supported
Intel® Xeon® 6300 series processor or Intel® Xeon® E-2400 series processor	One
Intel® Pentium® G7400/G7400T processor	One

PSU specifications

The PowerEdge R260 system supports one non cabled AC or DC power supply unit (PSU) or one non redundant cabled AC PSU..

Table 11. PSU specifications

PSU	Class	Heat dissipation (maximum) (BTU/hr)	Frequency (Hz)	Voltage	AC		DC	Current (A)
					High line 200–240 V	Low line 100–120 V		
450 W	Platinum	1730	50/60	100 V AC–240 V AC	450 W	450 W	N/A	6.5 - 3.5
700 W Mixed Mode HLAC	Titanium	2625	50/60	200 V AC–240 V AC	700 W	N/A	N/A	4.1
	N/A		N/A	240 V DC	N/A	N/A	700 W	3.4

NOTE: This system is also designed to connect to the IT power systems with a phase-to-phase voltage not exceeding 240 V.

NOTE: Heat dissipation is calculated using the PSU wattage rating.

NOTE: When selecting or upgrading the system configuration, to ensure optimum power utilization, verify the system power consumption with the Enterprise Infrastructure Planning Tool at **Dell.com/calc**.

NOTE: HLAC stands for High-Line AC, with a range of 200 - 240 V AC.

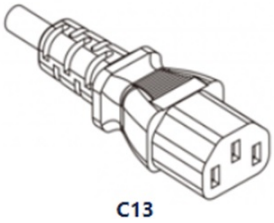

Figure 22. PSU power cord

Table 12. PSU power cords

Form factor	Output	Power cord
106 mm cabled	450 W	C13 /C14 (inlet)
60 mm non cabled	700 W	

Cooling fan specifications

The PowerEdge R260 system supports up to a maximum of six fans, five Standard (STD), and one High performance (HPR) cooling fan based on the system configuration. These fans are not hot swappable.

Table 13. Cooling fan specifications

Fan type	Abbreviation	Label color	Label image
Standard (STD) fans	STD	No label	
High performance (HPR) fans	HPR	No label	

Supported operating systems

The PowerEdge R260 system supports the following operating systems:

- Canonical Ubuntu Server LTS
- Microsoft Windows Server with Hyper-V
- Red Hat Enterprise Linux
- SUSE Linux Enterprise Server
- VMware ESXi

For more information, go to OS support.

System battery specifications

The PowerEdge R260 system uses one CR 2032 3.0-V lithium coin cell battery.

Expansion card riser specifications

The PowerEdge R260 system supports up to two Gen4 PCI express (PCIe) slots on the riser and one PCI express (PCIe) slot for PERC on system board.

Table 14. Expansion card slots supported on the system board

-	With Regular shroud	Butterfly Riser	
		Mechanical	Electrical
Slot-1 (Riser)	Half Length, Low Profile	x8	x8
Slot-2 (Riser)	Half Length, Low Profile	x16	x8

Memory specifications

The PowerEdge R260 system supports DDR5 UDIMM ECC memory in the following memory specifications for optimized operation.

Table 15. Memory specifications

DIMM type	DIMM rank	DIMM capacity	Single processor	
			Minimum system capacity	Maximum system capacity
DDR5 ECC UDIMM	Single rank	16 GB	16 GB	64 GB
	Dual rank	32 GB	32 GB	128 GB

Table 16. Memory module sockets

Memory module sockets	Speed
4, 288-pin	Up to 4400 MT/s

NOTE: Memory DIMM slots are not hot pluggable.

NOTE: The operating speed of the memory will be reduced due to processor limitation. For more information, refer R260 Technical Guide at PowerEdge Manuals

Storage controller specifications

The PowerEdge R260 system supports the following controller cards with a maximum of one internal controller and one external controller:

Table 17. Storage controller cards

Supported storage controller cards
Internal controllers ● PERC H355 ● PERC H755
External controllers ● HBA355e
Software RAID ● S160
Internal Boot ● Boot Optimized Storage Subsystem (BOSS-N1): HWRAID 2 x M.2 NVMe SSDs
SAS Hot Bus Adapters (HBA) ● HBA355i

Drives

The PowerEdge R260 system supports:

Front Drives

- 6 x 2.5-inch hot-swappable SAS,SATA drives through PERC.
- 4 x 2.5-inch hot-swappable SATA drives through chipset.
- 2 x 3.5-inch cabled, SAS,SATA drives through PERC.
- 2 x 3.5-inch cabled, SATA drives through chipset.

Ports and connectors specifications

NIC port specifications

The PowerEdge R260 system supports up to two 10/100/1000 Mbps Network Interface Controller (NIC) ports embedded on the LAN on Motherboard (LOM).

Table 18. NIC port specification for the system

Feature	Specifications
LOM	1 Gb x 2
Network Card	1 GbE x 4, 10 GbE x 2, 10 GbE x 4

Serial connector specifications

The PowerEdge R260 system supports one serial port on the system board, which is Data Terminal Equipment (DTE), 16550-compliant .

The serial connector is installed as default on the system board.

USB ports specifications

Table 19. PowerEdge R260 USB specifications

Front		Rear		Internal	
USB port type	**No. of ports**	**USB port type**	**No. of ports**	**USB port type**	**No. of ports**
USB 2.0-compliant port	One	USB 2.0-compliant port	One	Internal USB 3.2 Gen1-compliant port	One
iDRAC Direct port (Micro-AB USB 2.0-compliant port)	One	USB 3.2 Gen1-compliant ports	One		

NOTE: The micro USB 2.0 compliant port can only be used as an iDRAC Direct or a management port.

VGA ports specifications

The PowerEdge R260 system supports DB-15 VGA port on rear of the system

Video specifications

The PowerEdge R260 system supports integrated Matrox G200eW graphics controller with 16 MB of video frame buffer.

Table 20. Supported video resolution options

Resolution	Refresh rate (Hz)	Color depth (bits)
640 x 480	60 Hz	32
640 x 480	72 Hz	32
640 x 480	75 Hz	32
640 x 480	85 Hz	32
800 x 600	60 Hz	32
800 x 600	72 Hz	32
800 x 600	75 Hz	32
800 x 600	85 Hz	32
1024 x 768	60 Hz	32
1024 x 768	72 Hz	32
1024 x 768	75 Hz	32
1024 x 768	85 Hz	32
1280 x 800	60 Hz	32
1280 x 800	75 Hz	32
1280 x 1024	60 Hz	32
1280 x 1024	75 Hz	32
1360 x 768	60 Hz	32
1440 x 900	60 Hz	32
1440 x 900	60 Hz (RB)	32

Table 20. Supported video resolution options (continued)

Resolution	Refresh rate (Hz)	Color depth (bits)
1600 x 900	60 Hz (RB)	32
1600 x 900	60 Hz (RB)	32
1600 x 1200	60 Hz	32
1600 x 1200	60 Hz (RB)	32
1680 x 1050	60 Hz (RB)	32
1680 x 1050	60 Hz	32
1920 x 1080	60 Hz	32
1920 x 1080	60 Hz (RB)	32
1920 x 1200	60 Hz	32
1920 x 1200	60 Hz (RB)	32
1920 x 1200	85 Hz	32

Environmental specifications

NOTE: For additional information about environmental certifications, refer to the *Product Environmental Datasheet* located with the *Documentation* on Dell Support.

Table 21. Continuous Operation Specifications for ASHRAE A2

-	Allowable continuous operations
Temperature range for altitudes <= 900 m (<= 2953 ft)	10–35°C (50–95°F) with no direct sunlight on the equipment
Humidity percent range (non-condensing at all times)	8% RH with -12°C minimum dew point to 80% RH with 21°C (69.8°F) maximum dew point
Operational altitude de-rating	Maximum temperature is reduced by 1°C/300 m (33.8°F/984 Ft) above 900 m (2953 Ft)

Table 22. Continuous Operation Specifications for ASHRAE A3

-	Allowable continuous operations
Temperature range for altitudes <= 900 m (<= 2953 ft)	5–40°C (41–104°F) with no direct sunlight on the equipment
Humidity percent range (non-condensing at all times)	8% RH with -12°C minimum dew point to 85% RH with 24°C (75.2°F) maximum dew point
Operational altitude de-rating	Maximum temperature is reduced by 1°C/175 m (33.8°F/574 Ft) above 900 m (2953 Ft)

Table 23. Continuous Operation Specifications for ASHRAE A4

-	Allowable continuous operations
Temperature range for altitudes <= 900 m (<= 2953 ft)	5–45°C (41–113°F) with no direct sunlight on the equipment
Humidity percent range (non-condensing at all times)	8% RH with -12°C minimum dew point to 90% RH with 24°C (75.2°F) maximum dew point
Operational altitude de-rating	Maximum temperature is reduced by 1°C/125 m (33.8°F/410 Ft) above 900 m (2953 Ft)

Table 24. Common Environmental Specifications for ASHRAE A2, A3, and A4

-	Allowable continuous operations
Maximum temperature gradient (applies to both operation and non-operation)	20°C in an hour* (36°F in an hour) and 5°C in 15 minutes (41°F in 15 minutes), 5°C in an hour* (41°F in an hour) for tape **NOTE:** * - Per ASHRAE thermal guidelines for tape hardware, these are not instantaneous rates of temperature change.
Non-operational temperature limits	-40 to 65°C (-104 to 149°F)
Non-operational humidity limits	5% to 95% RH with 27°C (80.6°F) maximum dew point
Maximum non-operational altitude	12,000 meters (39,370 feet)
Maximum operational altitude	3,048 meters (10,000 feet)

Table 25. Maximum vibration specifications

Maximum vibration	Specifications
Operating	0.21 G_{rms} at 5 Hz to 500 Hz (all operation orientations)
Storage	1.88 G_{rms} at 10 Hz to 500 Hz for 15 minutes (all six sides tested)

Table 26. Maximum shock pulse specifications

Maximum shock pulse	Specifications
Operating	Six consecutively executed shock pulses in the positive and negative x, y, and z axis of 6 G for up to 11 ms.
Storage	Six consecutively executed shock pulses in the positive and negative x, y, and z axis (one pulse on each side of the system) of 71 G for up to 2 ms.

Particulate and gaseous contamination specifications

The following table defines the limitations that help avoid any equipment damage or failure from particulates and gaseous contamination. If the levels of particulates or gaseous pollution exceed the specified limitations and result in equipment damage or failure, you must rectify the environmental conditions. Remediation of environmental conditions is the responsibility of the customer.

Table 27. Particulate contamination specifications

Particulate contamination	Specifications
Air filtration: Conventional Data Center only	Data center air filtration as defined by ISO Class 8 per ISO 14644-1 with a 95% upper confidence limit **NOTE:** Filtering room air with a MERV8 filter, as specified in ANSI/ASHRAE Standard 127, is a recommended method for achieving the necessary environmental conditions. **NOTE:** Air entering the data center must have MERV11 or MERV13 filtration. **NOTE:** This condition applies to data center environments only. Air filtration requirements do not apply to IT equipment designed to be used outside a data center, in environments such as an office or factory floor.
Walk-Up Edge Data Center or Cabinet (sealed, closed loop environment)	Filtration is not required for cabinets that are anticipated to be opened six times or less per year. Class 8 per ISO 1466-1 filtration as defined above is required otherwise. **NOTE:** In environments commonly above ISA-71 Class G1 or that may have known challenges, special filters may be required.

Table 27. Particulate contamination specifications (continued)

Particulate contamination	Specifications
Conductive dust: data center and non-data center environments	Air must be free of conductive dust, zinc whiskers, or other conductive particles. **NOTE:** Conductive dust, which can interfere with equipment operation, can originate from various sources, including manufacturing processes and zinc whiskers that may develop on the plating of raised floor tiles. **NOTE:** This condition applies to data center and non-data center environments.
Corrosive dust: data center and non-data center environments	• Air must be free of corrosive dust. • Residual dust present in the air must have a deliquescent point less than 60% relative humidity. **NOTE:** This condition applies to data center and non-data center environments.

Table 28. Gaseous contamination specifications

Gaseous contamination	Specifications	Notes
Copper coupon corrosion rate	ISA-71 Class G1: <300 Å/month	Per ANSI/ISA71.04
Silver coupon corrosion rate	ISA-71 Class G1: <200 Å/month	Per ANSI/ISA71.04

Thermal air restrictions

ASHRAE A3/A4 environment

- The operating temperature is for a maximum altitude of 950 m for ASHRAE A3/A4 Cooling.
- If over 950 m, we need to do the ambient temperature de-rating.
- CPU TDP greater than 80 W is not supported.
- BOSS-N1 (M.2) module is not supported.
- Non-Dell qualified peripheral cards and/or peripheral cards greater than 25 W are not supported.

Thermal restriction matrix

Table 29. Processor and heat sink matrix

Heat sink	Configuration No
1U HSK	All configurations

Table 30. Label reference

Label	Description
STD	Standard
HPR	High Performance
LP	Low profile
FH	Full height

Table 31. Thermal restriction matrix

Configuration		Configuration 1 3.5 inch Drives Without PCIe card and BOSS-N1	Configuration 2 3.5 inch Drives All Configurations except Configuration 1	Configuration 3 2.5 inch Drives All Configurations	Ambient temperature
CPU TDP/ cTDP	≤ 55 W	3 x STD Fans 1U STD HSK	4 x STD 1U STD HSK	1 x HPR Fan, 5 x STD Fan 1U STD HSK	35°C (95°F)
	55 W ~ 95 W	4 x STD 1U STD HSK	4 x STD 1U STD HSK		35°C (95°F)

NOTE: Refer to the ASHRAE A3/A4 environment specifications under Appendix A for detailed configuration limitation.

Table 32. Fan Location

Chassis	Configuration	Fan Quantity	Fan Location
3.5 inch Drives	For CPU TDP ≤ 55 W, No PCIe card, No BOSS	3	Fan 1 (STD fan), Fan 2, Fan 3
3.5 inch Drives	All other configurations except Low power CPU configurations	4	Fan 1 (STD Fan), Fan 2, Fan 3, Fan 4
2.5 inch Drives	All other configurations	6	Fan 1 (HPR), Fan 2, Fan 3, Fan 4 , Fan 5, Fan 6

NOTE: Fan 4 is optional and is based on configurations.

NOTE: Fan 2 ~ Fan 6 are STD fan.

4

Initial system setup and configuration

This section describes the tasks for initial setup and configuration of the Dell system. The section also provides general steps to set up the system and the reference guides for detailed information.

Topics:

- Setting up the system
- iDRAC configuration
- Resources to install operating system

Setting up the system

Perform the following steps to set up the system:

Steps

1. Unpack the system.
2. Install the system into the rack. For more information, see the rail installation and cable management accessory guides relevant to your rail and cable management solution at PowerEdge manuals.
3. Connect the peripherals to the system and the system to the electrical outlet.
4. Power on the system.

   For more information about setting up the system, see the *Getting Started Guide* that is shipped with your system.

   NOTE: For information about managing the basic settings and features of the system, see the BIOS and UEFI chapter.

iDRAC configuration

The Integrated Dell Remote Access Controller (iDRAC) is designed to make you more productive as a system administrator and improve the overall availability of Dell servers. iDRAC alerts you to system issues, helps you to perform remote management, and reduces the need for physical access to the system.

Options to set up iDRAC IP address

To enable communication between your system and iDRAC, you must first configure the network settings based on your network infrastructure. The network settings option is set to **DHCP**, by default.

NOTE: For static IP configuration, you must request for the settings at the time of purchase.

You can set up the iDRAC IP address using one of the interfaces in the table below. For information about setting up an iDRAC IP address, see the documentation links provided in the table below.

NOTE: To access iDRAC, ensure that you connect the Ethernet cable to the iDRAC dedicated network port or use the iDRAC Direct port by using the micro USB (type AB) cable.

Options to log in to iDRAC

To log in to the iDRAC Web User Interface, open a browser and enter the IP address.

You can log in to iDRAC as:

- iDRAC user

- Microsoft Active Directory user
- Lightweight Directory Access Protocol (LDAP) user

In the login screen displayed, if you have opted for secure default access to iDRAC, the default username is `root` and enter the iDRAC secure default password available on back of the Information Tag. If you opted for legacy password, use the iDRAC legacy username and password - `root` and `calvin`, the iDRAC default password will be blank on the information tag. Then you will be prompted and required to create a password of your choice before proceeding. You can also log in by using your Single Sign-On or Smart Card.

NOTE: Ensure that you change the default username and password after setting up the iDRAC IP address.

For more information about logging in to the iDRAC and iDRAC licenses, see the latest Integrated Dell Remote Access Controller User's Guide

NOTE: To determine the most recent iDRAC release for your platform and for latest documentation version, see KB article KB78115.

You can also access iDRAC using command-line protocol - RACADM. For more information, see the Integrated Dell Remote Access Controller RACADM CLI Guide.

You can also access iDRAC using automation tool - Redfish API. For more information, see the Integrated Dell Remote Access Controller User's Guide Redfish API Guide.

Resources to install operating system

If the system is shipped without an operating system, you can install a supported operating system by using one of the resources provided in the table below. For information about how to install the operating system, see the documentation links provided in the table below.

Table 33. Resources to install the operating system

Resource	Documentation links
iDRAC	Integrated Dell Remote Access Controller User's Guideor for system specific Integrated Dell Remote Access Controller User's Guide, go to PowerEdge Manuals > **Product Support** page of your system > **Documentation**. **NOTE:** To determine the most recent iDRAC release for your platform and for latest documentation version, see KB article at KB78115.
Lifecycle Controller	Dell Lifecycle Controller User's Guide at iDRAC Manualsor for system specific Dell Lifecycle Controller User's Guide , go to PowerEdge Manuals > **Product Support** page of your system > **Documentation**. Dell recommends using Lifecycle Controller to install the OS, since all required drivers are installed on the system. **NOTE:** To determine the most recent iDRAC release for your platform and for latest documentation version, see KB article at KB78115.
OpenManage Deployment Toolkit	OpenManage Manuals > OpenManage Deployment Toolkit
Dell certified VMware ESXi	Virtualization solutions

NOTE: For more information about installation and how-to videos for operating systems supported on PowerEdge systems, see Supported Operating Systems for Dell PowerEdge systems.

Options to download drivers and firmware

You can download the firmware from the Dell support site. For information about downloading firmware, see the Downloading drivers and firmware section.

You can also choose any one of the following options to download the firmware. For information about how to download the firmware, see the documentation links provided in the table below.

Table 34. Options to download firmware

Option	Documentation link
Using Integrated Dell Remote Access Controller Lifecycle Controller (iDRAC with LC)	iDRAC Manuals
Using Dell Repository Manager (DRM)	OpenManage Manuals
Using Dell Server Update Utility (SUU)	OpenManage Manuals
Using Dell OpenManage Deployment Toolkit (DTK)	OpenManage Manuals
Using iDRAC virtual media	iDRAC Manuals

Options to download and install OS drivers

You can choose any one of the following options to download and install OS drivers. For information about how to download or install OS drivers, see the documentation links provided in the table below.

Table 35. Options to download and install OS drivers

Option	Documentation
Dell support site	Downloading drivers and firmware section.
iDRAC virtual media	Integrated Dell Remote Access Controller User's Guide or for system specific, go to Integrated Dell Remote Access Controller User's Guide > **Product Support** page of your system > **Documentation** . **NOTE:** To determine the most recent iDRAC release for your platform and for latest documentation version, see Integrated Dell Remote Access Controller Release Notes.

Downloading drivers and firmware

It is recommended that you download and install the latest BIOS, drivers, and systems management firmware on the system.

Prerequisites

Ensure that you clear the web browser cache before downloading the drivers and firmware.

Steps

1. Go to Drivers.
2. Enter the Service Tag of the system in the **Enter a Dell Service Tag, Dell Product ID or Model** field, and then press Enter.

   NOTE: If you do not have the Service Tag, click **Browse all products**, and navigate to your product.

3. On the displayed product page, click **Drivers & Downloads**.
   On the **Drivers & Downloads** page, all drivers that are applicable to the system are displayed.
4. Download the drivers to a USB drive, CD, or DVD.

5

Pre-operating system management applications

You can manage basic settings and features of a system without booting to the operating system by using the system firmware.

Options to manage the pre-operating system applications

You can use any one of the following options to manage the pre-operating system applications:

- System Setup
- Dell Lifecycle Controller
- Boot Manager
- Preboot Execution Environment (PXE)

Topics:

- System Setup
- Dell Lifecycle Controller
- Boot Manager
- PXE boot

System Setup

Using the **System Setup** option, you can configure the BIOS settings, iDRAC settings, and device settings of the system.

You can access system setup by using any one of the following interfaces:

- Graphical User interface — To access go to iDRAC Dashboard, click **Configurations** > **BIOS Settings**.
- Text browser — To enable the text browser, use the Console Redirection.

To view **System Setup**, power on the system, press F2, and click **System Setup Main Menu**.

NOTE: If the operating system begins to load before you press F2, wait for the system to finish booting, and then restart the system and try again.

The options on the **System Setup Main Menu** screen are described in the following table:

Table 36. System Setup Main Menu

Option	Description
System BIOS	Enables you to configure the BIOS settings.
iDRAC Settings	Enables you to configure the iDRAC settings. The iDRAC settings utility is an interface to set up and configure the iDRAC parameters by using UEFI (Unified Extensible Firmware Interface). You can enable or disable various iDRAC parameters by using the iDRAC settings utility. For more information about this utility, see Integrated Dell Remote Access Controller User's Guide

Table 36. System Setup Main Menu (continued)

Option	Description
Device Settings	Enables you to configure device settings for devices such as storage controllers or network cards.
Service Tag Settings	Enables you to configure the System Service Tag.

System BIOS

To view the **System BIOS** screen, power on the system, press F2, and click **System Setup Main Menu** > **System BIOS**.

Table 37. System BIOS details

Option	Description
System Information	Provides information about the system such as the system model name, BIOS version, and Service Tag.
Memory Settings	Specifies information and options related to the installed memory.
Processor Settings	Specifies information and options related to the processor such as speed and cache size.
SATA Settings	Specifies options to enable or disable the embedded SATA controller and ports.
Boot Settings	Specifies options to specify the Boot mode (UEFI). Enables you to modify UEFI boot settings.
Network Settings	Specifies options to manage the UEFI network settings and boot protocols. Legacy network settings are managed from the **Device Settings** menu. **NOTE:** Network Settings are not supported in BIOS boot mode.
Integrated Devices	Specifies options to manage integrated device controllers and ports, specifies related features, and options.
Serial Communication	Specifies options to manage the serial ports, its related features, and options.
System Profile Settings	Specifies options to change the processor power management settings, memory frequency.
System Security	Specifies options to configure the system security settings, such as system password, setup password, Trusted Platform Module (TPM) security, and UEFI secure boot. It also manages the power button on the system.
Redundant OS Control	Sets the redundant OS information for redundant OS control.
Miscellaneous Settings	Specifies options to change the system date and time.

System Information

To view the **System Information** screen, power on the system, press F2, and click **System Setup Main Menu** > **System BIOS** > **System Information**.

Table 38. System Information details

Option	Description
System Model Name	Specifies the system model name.
System BIOS Version	Specifies the BIOS version installed on the system.
System Management Engine Version	Specifies the current version of the Management Engine firmware.
System Service Tag	Specifies the system Service Tag.

Table 38. System Information details (continued)

Option	Description
System Manufacturer	Specifies the name of the system manufacturer.
System Manufacturer Contact Information	Specifies the contact information of the system manufacturer.
System CPLD Version	Specifies the current version of the system Complex Programmable Logic Device (CPLD) firmware.
UEFI Compliance Version	Specifies the UEFI compliance level of the system firmware.

Memory Settings

To view the **Memory Settings** screen, power on the system, press F2, and click **System Setup Main Menu** > **System BIOS** > **Memory Settings**.

Table 39. Memory Settings details

Option	Description
System Memory Size	Specifies the size of the system memory.
System Memory Type	Specifies the type of memory installed in the system.
System Memory Speed	Specifies the speed of the system memory.
Video Memory	Specifies the size video memory.
System Memory Testing	Specifies whether the system memory tests are run during system boot. The two options available are **Enabled** and **Disabled**. This option is set to **Disabled** by default.
Memory Operating Mode	This field selects the memory operating mode. This feature is active only if a valid memory configuration is detected. When **Optimizer Mode** is enabled, the DRAM controllers operate independently in 64-bit mode and provide optimized memory performance.
Current State of Memory Operating Mode	Specifies the current state of the memory operating mode.
Memory training	When option is set to **Fast** and memory configuration is not changed, the system uses previously saved memory training parameters to train the memory subsystems and system boot time is also reduced. If memory configuration is changed, the system automatically enables **Retrain at Next boot** to force one-time full memory training steps, and then go back to **Fast** afterward. When option is set to **Retrain at Next boot**, the system performs the force one-time full memory training steps at next power on and boot time is slowed on next boot. When option is set to **Enable**, the system performs the force full memory training steps on every power on and boot time is slowed on every boot.
DIMM Population	Provides information about the DIMM slots which has an installed DIMM.

Processor Settings

To view the **Processor Settings** screen, power on the system, press F2, and click **System Setup Main Menu** > **System BIOS** > **Processor Settings**.

Table 40. Processor Settings details

Option	Description
Logical Processor	Each processor core supports up to two logical processors. If this option is set to **Enabled**, the BIOS displays all the logical processors. If this option is set to **Disabled**, the BIOS displays only one logical processor per core. This option is set to **Enabled** by default.
Virtualization Technology	Enables or disables the virtualization technology for the processor. This option is set to **Enabled** by default.
Kernel DMA Protection	When set to et to **Enabled**, using Virtualization Technology, BIOS, and Operating System will enable direct memory access protection for DMA capable peripheral devices. Enable Virtualization technology to use this option. This option is set to **Disabled** by default.
Adjacent Cache Line Prefetch	Optimizes the system for applications that need high utilization of sequential memory access. This option is set to **Enabled** by default. You can disable this option for applications that need high utilization of random memory access.
Hardware Prefetcher	Enables or disables the hardware prefetcher. This option is set to **Enabled** by default.
LLC Prefetch	Enables or disables the LLC Prefetch on all threads. This option is set to **Disabled** by default.
Dead Line LLC Alloc	Enables or disables the Dead Line LLC Alloc. This option is set to **Enabled** by default. You can enable this option to enter the dead lines in LLC or disable the option to not enter the dead lines in LLC.
Directory AtoS	Enables or disables the Directory AtoS. AtoS optimization reduces remote read latencies for repeat read accesses without intervening writes. This option is set to **Disabled** by default.
x2APIC Mode	Enables or disables x2APIC mode. This option is set to **Enabled** by default. **NOTE:** For two processors 64 cores configuration, x2APIC mode is not switchable if 256 threads are enabled (BIOS settings: All CCD, cores, and logical processors enabled). **NOTE:** x2APIC Mode has a dependency on Virtualization Technology. x2APIC Mode will take the setting assigned to Virtualization Technology and cannot be manually changed.
Number of Cores per Processor	This option is set to **All** by default.
Processor Core Speed	Specifies the maximum core frequency of the processor.

Table 41. Processor details

Option	Description
Family-Model-Stepping	Specifies the family, model, and stepping of the processor as defined by Intel.
Brand	Specifies the brand name.

Table 41. Processor details (continued)

Option	Description	
Level 2 Cache	Specifies the total L2 cache.	
Level 3 Cache	Specifies the total L3 cache.	
Number of Cores	Specifies the number of cores per processor.	
Microcode	Specifies the processor microcode version.	

SATA Settings

To view the **SATA Settings** screen, power on the system, press F2, and click **System Setup Main Menu** > **System BIOS** > **SATA Settings**.

Table 42. SATA Settings details

Option	Description
Embedded SATA	Enables the embedded SATA option to be set to **Off**, **AHCI mode** , or **RAID modes**. This option is set to **AHCI Mode** by default. **NOTE:** No ESXi and Ubuntu OS support under RAID mode.
Security Freeze Lock	Sends **Security Freeze Lock** command to the embedded SATA drives during POST. This option is applicable only for AHCI Mode. This option is set to **Enabled** by default.
Write Cache	Enables or disables the command for the embedded SATA drives during POST. This option is applicable only for AHCI Mode. This option is set to **Disabled** by default.
Port n	Sets the drive type of the selected device. For **AHCI Mode**, BIOS support is always enabled.

Table 43. Port n

Options	Descriptions
Model	Specifies the drive model of the selected device.
Drive Type	Specifies the type of drive attached to the SATA port.
Capacity	Specifies the total capacity of the drive. This field is undefined for removable media devices such as optical drives.

Boot Settings

The **Boot Settings** only support **UEFI** mode.

- **UEFI**: The Unified Extensible Firmware Interface (UEFI) is a new interface between operating systems and platform firmware. The interface consists of data tables with platform related information, boot and runtime service calls that are available to the operating system and its loader. The following benefits are available when the **Boot Mode** is set to **UEFI**:
  - Support for drive partitions larger than 2 TB.
  - Enhanced security (e.g., UEFI Secure Boot).
  - Faster boot time.

  NOTE: You must use only the UEFI boot mode in order to boot from NVMe drives.

To view the **Boot Settings** screen, power on the system, press F2, and click **System Setup Main Menu** > **System BIOS** > **Boot Settings**.

Table 44. Boot Settings details

Option	Description
Boot Mode	This is the boot mode of the system. This option is set to **UEFI** by default. **NOTE:** PowerEdge R360/T360/T160 and R260 configurations only support UEFI. This option is grayed out.
Boot Sequence Retry	Enables or disables the Boot sequence retry feature or resets the system. When this option is set to **Enabled** and the system fails to boot, the system re-attempts the boot sequence after 30 seconds. When this option is set to **Reset** and the system fails to boot, the system reboots immediately. This option is set to **Enabled** by default.
Generic USB Boot	Enables or disables the generic USB boot placeholder. This option is set to **Disabled** by default.
Hard-disk Drive Placeholder	Enables or disables the Hard-disk drive placeholder. This option is set to **Disabled** by default.
Clean all Sysprep variables and order	When this option is set to **None**, BIOS will do nothing. When set to **Yes**, BIOS will delete variables of SysPrep #### and SysPrepOrder this option is a onetime option, will reset to none when deleting variables. This setting is only available in **UEFI Boot Mode**. This option is set to **None** by default.
UEFI Boot Settings	Specifies the UEFI boot sequence. Enables or disables UEFI Boot options. **NOTE:** This option controls the UEFI boot order. The first option in the list will be attempted first.

Table 45. UEFI Boot Settings

Option	Description
UEFI Boot Sequence	Enables you to change the boot device order.
Boot Option Enable/Disable	Enables you to select the enabled or disabled boot devices

Choosing system boot mode

System Setup enables you to specify one of the following boot modes for installing your operating system:

- UEFI boot mode (the default), is an enhanced 64-bit boot interface. If you have configured your system to boot to UEFI mode, it replaces the system BIOS.

1. From the **System Setup Main Menu**, click **Boot Settings**, and select **Boot Mode**.
2. Select the UEFI boot mode you want the system to boot into.

   CAUTION: Switching the boot mode may prevent the system from booting if the operating system is not installed in the same boot mode.

3. After the system boots in the specified boot mode, proceed to install your operating system from that mode.

NOTE: Operating systems must be UEFI-compatible to be installed from the UEFI boot mode. DOS and 32-bit operating systems do not support UEFI and can only be installed from the BIOS boot mode.

NOTE: For the latest information about supported operating systems, go to Dell OS Support.

Changing boot order

About this task

You may have to change the boot order if you want to boot from a USB key.

Steps

1. On the **System Setup Main Menu** screen, click **System BIOS** > **Boot Settings** > **UEFI Boot Settings** > **UEFI Boot Sequence**.

2. Use the arrow keys to select a boot device, and use the plus (+) and minus (-) sign keys to move the device down or up in the order.
3. Click **Exit**, and then click **Yes** to save the settings on exit.

   NOTE: You can also enable or disable boot order devices as needed.

Network Settings

To view the **Network Settings** screen, power on the system, press F2, and click **System Setup Main Menu** > **System BIOS** > **Network Settings**.

NOTE: Network Settings are not supported in BIOS boot mode.

Table 46. Network Settings details

Option	Description
UEFI PXE Settings	Enables you to control the configuration of the UEFI PXE device.
Number of PXE Devices	Enables you to choose the number of PXE Devices from 1 to 4, 8, 12, 16.
PXE Device n (n = 1 to 16)	Enables or disables the device. When enabled, a UEFI PXE boot option is created for the device.
PXE Device n Settings (n = 1 to 16)	Enables you to control the configuration of the PXE device.
UEFI HTTP Settings	Enables you to control the configuration of the UEFI HTTP device.
HTTP Device n (n = 1 to 4)	Enables or disables the device. When enabled, a UEFI HTTP boot option is created for the device.
HTTP Device n Settings (n = 1 to 4)	Enables you to control the configuration of the HTTP device.
UEFI ISCSI Settings	Enables you to control the configuration of the iSCSI device.

Table 47. PXE Device n Settings details

Option	Description
Interface	Specifies the NIC interface used for the PXE device.
Protocol	Specifies Protocol used for PXE device. This option is set to **IPv4** or **IPv6**. This option is set to **IPv4** by default.
VLAN	Enables Vlan for PXE device. This option is set to **Enabled** or **Disabled**. This option is set to **Disabled** by default.
VLAN ID	Shows the Vlan ID for the PXE device
VLAN Priority	Shows the Vlan Priority for the PXE device.

Table 48. HTTP Device n Settings details

Option	Description
Interface	Specifies the NIC interface used for the HTTP device.
Protocol	Specifies Protocol used for HTTP device. This option is set to **IPv4** or **IPv6**. This option is set to **IPv4** by default.
VLAN	Enables Vlan for HTTP device. This option is set to **Enable** or **Disable**. This option is set to **Disable** by default.
VLAN ID	Shows the Vlan ID for the HTTP device
Vlan Priority	Shows the Vlan Priority for the HTTP device.
DHCP	Enables or disables DHCP for this HTTP device. This option is set to **Enabled** by default.
IP Address	Specifies IP address for the HTTP device.

Table 48. HTTP Device n Settings details (continued)

Option	Description
Subnet Mask	Specifies subnet mask for the HTTP device.
Autoconfiguration	Enables or disables the **IPv6Autoconfiguration** for the HTTP Device. When set to Enabled, IPv6 Address and Gateway are retrieved from Autoconfiguration mechanism.
IPv6 Address	IPv6 Unicast address for this HTTP Device.
Prefix Length	IPv6 Prefix Length (0~127) for this HTTP Device.
Gateway	Specifies gateway for the HTTP device.
DNS info via DHCP	Enables or disables DNS Information from DHCP. This option is set to **Enabled** by default.
Primary DNS	Specifies the primary DNS server IP address for the HTTP Device.
Secondary DNS	Specifies the secondary DNS server IP address for the HTTP Device.
URI (will obtain from DHCP server if not specified)	Obtain URI from the DHCP server if not specified
TLS Authentication Configuration	Specifies the option for TLS authentication configuration. View or modify the device's boot TLS Authentication Mode. This option is set to **One Way** by default. **None** means the HTTP server and the client will not authenticate each other for this boot.

NOTE: Autoconfiguration, Prefix Length and IPv6 Address options are visible only when **Protocol** is set to **IPv6**

Table 49. UEFI iSCSI Settings screen details

Option	Description
iSCSI Initiator Name	Specifies the name of the iSCSI initiator in IQN format.
iSCSI Device1	Enables or disables the iSCSI device. When disabled, a UEFI boot option is created for the iSCSI device automatically. This is set to **Disabled** by default.
iSCSI Device1 Settings	Enables you to control the configuration of the iSCSI device.

Table 50. ISCSI Device1 Settings screen details

Option	Description
Connection 1	Enables or disables the iSCSI connection. This option is set to **Disabled** by default.
Connection 2	Enables or disables the iSCSI connection. This option is set to **Disabled** by default.
Connection 1 Settings	Enables you to control the configuration for the iSCSI connection.
Connection 2 Settings	Enables you to control the configuration for the iSCSI connection.
Connection Order	Enables you to control the order for which the iSCSI connections will be attempted.

Integrated Devices

To view the **Integrated Devices** screen, power on the system, press F2, and click **System Setup Main Menu** > **System BIOS** > **Integrated Devices**.

Table 51. Integrated Devices details

Option	Description
User Accessible USB Ports	Configures the user accessible USB ports. Selecting **Only Back Ports On** disables the front USB ports; selecting **All Ports Off** disables all front and back USB ports. This option is set to **All Ports On** by default.

Table 51. Integrated Devices details (continued)

Option	Description
	The USB keyboard and mouse still function in certain USB ports during the boot process, depending on the selection. After the boot process is complete, the USB ports will be enabled or disabled as per the setting.
Internal USB Port	Enables or disables the internal USB port. This option is set to **ON** by default.
iDRAC Direct USB Port	The iDRAC Direct USB port is managed by iDRAC exclusively with no host visibility. This option is set to **ON** or **OFF**. When set to **OFF**, iDRAC does not detect any USB devices installed in this managed port. This option is set to **On** by default.
Embedded NIC1 and NIC2	Enables or disables the OS interface of the Embedded NIC1 and NIC2 controller. If set to **Disabled (OS)**, the NIC may still be available for shared network access by the embedded management controller. Configure the **Embedded NIC1 and NIC2** option by using the NIC management utilities of the system. This option is set to **Enabled** by default.
I/OAT DMA Engine	Enables or disables the I/O Acceleration Technology (I/OAT) option. I/OAT is a set of DMA features designed to accelerate network traffic and lower CPU utilization. Enable only if the hardware and software support the feature. This option is set to **Disabled** by default.
Embedded Video Controller	Enables or disables the use of Embedded Video Controller as the primary display. When set to **Enabled**, the Embedded Video Controller will be the primary display even if add-in graphic cards are installed. When set to **Disabled**, an add-in graphics card is used as the primary display. BIOS will output displays to both the primary add-in video and the embedded video during POST and preboot environment. The embedded video will then be disabled right before the operating system boots. This option is set to **Enabled** by default. **NOTE:** When there are multiple add-in graphic cards installed in the system, the first card discovered during PCI enumeration is selected as the primary video. You might have to rearrange the cards in the slots in order to control which card is the primary video.
Current State of Embedded Video Controller	Displays the current state of the embedded video controller. The **Current State of Embedded Video Controller** option is a read-only field. If the Embedded Video Controller is the only display capability in the system (that is, no add-in graphics card is installed), then the Embedded Video Controller is automatically used as the primary display even if the **Embedded Video Controller** setting is set to **Disabled**.
OS Watchdog Timer	If your system stops responding, this watchdog timer aids in the recovery of your operating system. When this option is set to **Enabled**, the operating system initializes the timer. When this option is set to **Disabled** (the default), the timer does not have any effect on the system.
Empty Slot Unhide	Enables or disables the root ports of all the empty slots that are accessible to the BIOS and operating system. This option is set to **Disabled** by default.
Slot Disablement	Enables or disables or boot driver disables the available PCIe slots on your system. The slot disablement feature controls the configuration of the PCIe cards installed in the specified slot. Slots must be disabled only when the installed peripheral card prevents booting into the operating system or causes delays in system startup. If the slot is disabled, both the Option ROM and UEFI drivers are disabled. Only slots that are present on the system will be available for control. When this option is set to boot driver disabled, both the Option ROM and UEFI driver from the slot will not run during POST. The system will not boot from the card and its pre-boot services will not be available. However, the card is available to the operating system.
	Slot n: Enables or disables or only the boot driver is disabled for the PCIe slot n. This option is set to **Enabled** by default.

Serial Communication

To view the **Serial Communication** screen, power on the system, press F2, and click **System Setup Main Menu** > **System BIOS** > **Serial Communication**.

Table 52. Serial Communication details

Option	Description
Serial Communication	Enables the serial communication options. Selects serial communication devices (Serial Device 1 and Serial Device 2) in BIOS. BIOS console redirection can also be enabled, and the port address can be specified.
Serial Port Address	Enables you to set the port address for serial devices. This option is set to **Serial Device1=COM2,**, **Serial Device 2=COM1** and set to by default. **NOTE:** You can use only Serial Device 2 for the Serial Over LAN (SOL) feature. To use console redirection by SOL, configure the same port address for console redirection and the serial device. **NOTE:** Every time the system boots, the BIOS syncs the serial MUX setting that is saved in iDRAC. The serial MUX setting can independently be changed in iDRAC. Loading the BIOS default settings from within the BIOS setup utility may not always revert the serial MUX setting to the default setting of Serial Device 1.
External Serial Connector	Enables you to associate the External Serial Connector to **Serial Device 1**, **Serial Device 2**, or the **Remote Access Device** by using this option. This option is set to **Serial Device 1** by default. **NOTE:** Only Serial Device 2 can be used for Serial Over LAN (SOL). To use console redirection by SOL, configure the same port address for console redirection and the serial device. **NOTE:** Every time the system boots, the BIOS syncs the serial MUX setting saved in iDRAC. The serial MUX setting can independently be changed in iDRAC. Loading the BIOS default settings from within the BIOS setup utility may not always revert this setting to the default setting of Serial Device 1.
Failsafe Baud Rate	Specifies the failsafe baud rate for console redirection. The BIOS attempts to determine the baud rate automatically. This failsafe baud rate is used only if the attempt fails, and the value must not be changed. This option is set to **115200** by default.
Remote Terminal Type	Sets the remote console terminal type. This option is set to **VT100/VT220** by default.

System Profile Settings

To view the **System Profile Settings** screen, power on the system, press F2, and click **System Setup Main Menu** > **System BIOS** > **System Profile Settings**.

Table 53. System Profile Settings details

Option	Description
System Profile	Sets the system profile. If you set the System Profile option to a mode other than **Custom**, the BIOS automatically sets the rest of the options. You can only change the rest of the options if the mode is set to **Custom**. This option is set to **Performance Per Watt (OS)** by default. Other options include **Performance** and, **Custom**. **NOTE:** All the parameters on the system profile setting screen are available only when the **System Profile** option is set to **Custom**.
CPU Power Management	Sets the CPU power management. This option is set to **OS DBPM** by default. Other option includes **Maximum Performance**, **OS DBPM**.

Table 53. System Profile Settings details (continued)

Option	Description
Memory Frequency	Sets the speed of the system memory. You can select **Maximum Performance**, **Maximum Reliability** or a specific speed. This option is set to **Maximum Performance** by default.
Turbo Boost	Enables or disables the processor to operate in the turbo boost mode. This option is set to **Enabled** by default.
C1E	Enables or disables the processor to switch to a minimum performance state when it is idle. This option is set to **Enabled** by default.
C-States	Enables or disables the processor to operate in all available power states. C States allow the processor to enter lower power states when idle. When set to **Enabled** (OS controlled) or when set to **Autonomous** (if hardware controlled is supported), the processor can operate in all available Power States to save power, but may increase memory latency and frequency jitter. This option is set to **Enabled** by default.
Memory Refresh Rate	Sets the memory refresh rate to either 1x or 2x. This option is set to **1x** by default.
Uncore Frequency	Enables you to select the **Uncore Frequency** option. **Dynamic mode** enables the process or to optimize power resources across cores and uncores during runtime. Maximum mode enables the **Maximum** uncore frequency.
Dynamic Load Line Switch	Dynamic Load Line Switch control. Dynamic Load Line (DLL) is a Power Management feature, which dynamically switches to the performance mode during periods of high CPU utilization. This setting is read-only and set to **Enabled** when Optimized Power Mode is Enabled. **Read - Only** unless System Profile is set to Custom.
Monitor/Mwait	Enables the Monitor/Mwait instructions in the processor. This option is set to **Enabled** for all system profiles, except **Custom** by default. **NOTE:** This option can be disabled when System Profile is set to **Custom**. **NOTE:** **Monitor/Mwait** has dependency on C States, so ensure that C States option is set to **Disabled** before changing this item.
PCI ASPM L1 Link Power Management	Enables or disables the PCI **ASPM L1 Link Power Management**. This option is set to **Enabled** by default.
Workload Configuration	This feature allows you to select a preconfigured workload profile. This option is set to **Balance** by default.

System Security

To view the **System Security** screen, power on the system, press F2, and click **System Setup Main Menu** > **System BIOS** > **System Security**.

Table 54. System Security details

Option	Description
CPU AES-NI	Improves the speed of applications by performing encryption and decryption by using the Advanced Encryption Standard Instruction Set (AES-NI). This option is set to **Enabled** by default.
Strong Password Status	If **Enabled**, you must set a password that has at least one character in lowercase, upper case, digit , and a special character. This option is set to **Disabled** by default.
Strong Password Minimum Length (8 to 32)	Allows you to select the minimum characters for the password. You can specify 8-32 characters. This option gets **Enabled** when the **Strong Password Status** option is **Enabled**.
System Password	Sets the system password. This option is set to **Enabled** by default and is read-only if the password jumper is not installed in the system.
Setup Password	Sets the setup password. This option is read-only if the password jumper is not installed in the system.

Table 54. System Security details (continued)

Option	Description
Password Status	Locks the system password. This option is set to **Unlocked** by default.
TPM Information	Indicates the type of Trusted Platform Module, if present.

Table 55. TPM 2.0 security information

Option	Description	
TPM Information		
TPM Security	**NOTE:** The TPM menu is available only when the TPM module is installed. Enables you to control the reporting mode of the TPM. When set to Off, the presence of the TPM is not reported to the OS. When set to On, the presence of the TPM is reported to the OS. The **TPM Security** option is set to **Off** by default.	
	When TPM 2.0 is installed, the **TPM Security** option is set to **On** or **Off**. This option is set to **Off** by default.	
TPM Informatio n	Indicates the type of Trusted Platform Module, if present.	
TPM Firmware	Indicates the firmware version of the TPM.	
TPM Hierarcy	Enables, disables, or clears the storage and endorsement hierarchies. When set to **Enabled**, the storage and endorsement hierarchies can be used.	
	When set to **Disabled**, the storage and endorsement hierarchies cannot be used.	
	When set to **Clear**, the storage and endorsement hierarchies are cleared of any values, and then reset to **Enabled**.	
TPM Advanced Settings	**TPM PPI Bypass Provision**	When set to **Enabled**, allows the Operating System to bypass Physical Presence Interface (PPI) prompts when issuing PPI Advanced Configuration and Power interface (ACPI) provisioning operations.
	TPM PPI Bypass Clear	When set to **Enabled** allows the Operating System to bypass Physical Presence Interface (PPI) prompts when issuing PPI Advanced Configuration and Power Interface (ACPI) clear operations.
	TPM2 Algorithm Selection	Allows the user to change the cryptographic algorithms used in the Trusted Platform Module (TPM). The available options are dependent on the TPM firmware. To enable TPM2 Algorithm Selection, Intel(R) TXT technology must be disabled. The TPM2 Algorithm Selection option supports SHA256 by detecting the TPM module. This option is set to **SHA256** by default.
Intel(R) TXT	Enables you to set the Intel Trusted Execution Technology (TXT) option. To enable the **Intel TXT** option, virtualization technology and TPM Security must be enabled with Pre-boot measurements. This option is set to **Off** by default. It is set **On** for Secure Launch (Firmware Protection) support on Windows 2022 and Windows server 2025.	

Table 56. System Security details

Option	Description
Power button:	Enables or disables the power button on the front of the system. This option is set to **Enabled** by default.
AC Power Recovery	Sets how the system behaves after AC power is restored to the system. **NOTE:** The host system will not power on up until iDRAC Root of Trust (RoT) is completed, host power on will be delayed by minimum 90 seconds after the AC applied.

Table 56. System Security details (continued)

Option	Description
AC Power Recovery Delay	Sets the time delay for the system to power up after AC power is restored to the system. This option is set to **Immediate** by default. When this option is set to **Immediate**, there is no delay for power up. When this option is set to **Random**, the system creates a random delay for power up. When this option is set to **User Defined**, the system delay time is manually to power up.
User Defined Delay (120 s to 600 s)	Sets the **User Defined Delay** option when the **User Defined** option for **AC Power Recovery Delay** is selected. The actual AC recovery time needs to add iDRAC root of trust time (around 50 seconds).
UEFI Variable Access	Provides varying degrees of securing UEFI variables. When set to **Standard** (the default), UEFI variables are accessible in the operating system per the UEFI specification. When set to **Controlled**, selected UEFI variables are protected in the environment and new UEFI boot entries are forced to be at the end of the current boot order.
In-Band Manageability Interface	When set to **Disabled** , this setting hides the Management Engine's (ME), HECI devices, and the system's IPMI devices from the operating system. This prevents the operating system from changing the ME power capping settings, and blocks access to all in-band management tools. All management should be managed through out-of-band. This option is set to **Enabled** by default. **NOTE:** BIOS update requires HECI devices to be operational and DUP updates require IPMI interface to be operational. This setting needs to be set to Enabled to avoid updating errors.
SMM Security Mitigation	Enables or disables the UEFI SMM security migration protections. It is set to **Disabled** by default.
Secure Boot	Enables Secure Boot, where the BIOS authenticates each pre-boot image by using the certificates in the Secure Boot Policy. Secure Boot is set to **Disabled** by default.
Secure Boot Policy	When Secure Boot policy is set to **Standard**, the BIOS uses the system manufacturer's key and certificates to authenticate pre-boot images. When Secure Boot policy is set to **Custom**, the BIOS uses the user-defined key and certificates. Secure Boot policy is set to **Standard** by default.
Secure Boot Mode	Configures how the BIOS uses the Secure Boot Policy Objects (PK, KEK, db, dbx).
	If the current mode is set to **Deployed Mode**, the available options are **User Mode** and **Deployed Mode**. If the current mode is set to **User Mode**, the available options are **User Mode**, **Audit Mode**, and **Deployed Mode**.
	Below are the details of different boot modes available in the **Secure Boot Mode** option. **User Mode**: In **User Mode**, PK must be installed, and BIOS performs signature verification on programmatic attempts to update policy objects. The BIOS allows unauthenticated programmatic transitions between modes. **Audit mode**: In **Audit Mode**, PK is not present. BIOS does not authenticate programmatic update to the policy objects and transitions between modes. The BIOS performs a signature verification on pre-boot images and logs the results in the image Execution Information Table, but executes the images whether they pass or fail verification. **Audit Mode** is useful for programmatic determination of a working set of policy objects. **Deployed Mode**: **Deployed Mode** is the most secure mode. In **Deployed Mode**, PK must be installed and the BIOS performs signature verification on programmatic attempts to update policy objects. **Deployed Mode** restricts the programmatic mode transitions.

Table 56. System Security details (continued)

Option	Description
Secure Boot Policy Summary	Specifies the list of certificates and hashes that secure boot uses to authenticate images. Below are the list of options available on the **Secure Boot Policy Summary** screen: 1. **Platform Key (PK)** 2. **Key Exchange Key (KEK) Database Entries** 3. **Authorized Signature Database (db) Entries** The options above are described through the following fields: ● Type ● Issuer ● Subject ● Signature Owner GUID 4. **Forbidden Signature Database (dbx) Entries**
Secure Boot Custom Policy Settings	Configures the Secure Boot Custom Policy. To enable this option, set the Secure Boot Policy to **Custom** option. Below are the list of options available on the **Secure Boot Custom Policy Settings** screen: 1. **Platform Key (PK)** 2. **Key Exchange Key (KEK) Database** 3. **Authorized Signature Database (db)** 4. **Forbidden Signature Database (dbx)** 5. **Delete All Policy Entries (PK, KEK, db, and dbx)** 6. **Restore Default Policy Entries (PK, KEK, db, and dbx)** 7. **Export Firmware Hash Values**
UEFI CA Certificate Scope	This setting controls how the Secure Boot feature uses the industry standard UEFI CA certificate in the Authorized Signature Database (db). For example, system administrators can configure this setting to use the UEFI CA certificate only for verifying boot device firmware (such as RAID controller firmware or NIC firmware) and not for verifying operating system loaders. This is useful in preventing attacks that exploit vulnerable operating system loaders that are signed by the UEFI CA certificate.

Creating a system and setup password

Prerequisites

Ensure that the password jumper is enabled. The password jumper enables or disables the system password and setup password features. For more information, see the System board jumper settings section.

NOTE: If the password jumper setting is disabled, the existing system password and setup password are deleted and you need not provide the system password to boot the system.

Steps

1. To enter System Setup, press F2 immediately after turning on or rebooting your system.
2. On the **System Setup Main Menu** screen, click **System BIOS** > **System Security**.
3. On the **System Security** screen, verify that **Password Status** is set to **Unlocked**.
4. In the **System Password** field, type your system password, and press Enter or Tab.
   Use the following guidelines to assign the system password:
   - A password can have up to 32 characters.

   A message prompts you to reenter the system password.
5. Reenter the system password, and click **OK**.
6. In the **Setup Password** field, type your setup password and press Enter or Tab.
   A message prompts you to reenter the setup password.
7. Reenter the setup password, and click **OK**.
8. Press Esc to return to the System BIOS screen. Press Esc again.

A message prompts you to save the changes.

NOTE: Password protection does not take effect until the system reboots.

Using your system password to secure your system

About this task

If you have assigned a setup password, the system accepts your setup password as an alternate system password.

Steps

1. Turn on or reboot your system.
2. Type the system password and press Enter.

Next steps

When **Password Status** is set to **Locked**, type the system password and press Enter when prompted at reboot.

NOTE: If an incorrect system password is typed, the system displays a message and prompts you to reenter your password. You have three attempts to type the correct password. After the third unsuccessful attempt, the system displays an error message that the system has stopped functioning and must be turned off. Even after you turn off and restart the system, the error message is displayed until the correct password is entered.

Deleting or changing system and setup password

Prerequisites

NOTE: You cannot delete or change an existing system or setup password if the **Password Status** is set to **Locked**.

Steps

1. To enter System Setup, press F2 immediately after turning on or restarting your system.
2. On the **System Setup Main Menu** screen, click **System BIOS** > **System Security**.
3. On the **System Security** screen, ensure that **Password Status** is set to **Unlocked**.
4. In the **System Password** field, alter or delete the existing system password, and then press Enter or Tab.
5. In the **Setup Password** field, alter or delete the existing setup password, and then press Enter or Tab.

   If you change the system and setup password, a message prompts you to reenter the new password. If you delete the system and setup password, a message prompts you to confirm the deletion.
6. Press Esc to return to the **System BIOS** screen. Press Esc again, and a message prompts you to save the changes.
7. Select **Setup Password**, change, or delete the existing setup password and press Enter or Tab.

   NOTE: If you change the system password or setup password, a message prompts you to reenter the new password. If you delete the system password or setup password, a message prompts you to confirm the deletion.

Operating with setup password enabled

If **Setup Password** is set to **Enabled**, type the correct setup password before modifying the system setup options.

If you do not type the correct password in three attempts, the system displays the following message:

```
Invalid Password! Number of unsuccessful password attempts: <x> System Halted! Must
power down.
```

Even after you power off and restart the system, the error message is displayed until the correct password is typed. The following options are exceptions:

- If **System Password** is not set to **Enabled** and is not locked through the **Password Status** option, you can assign a system password. For more information, see the System Security Settings screen section.
- You cannot disable or change an existing system password.

NOTE: You can use the password status option with the setup password option to protect the system password from unauthorized changes.

Redundant OS Control

To view the **Redundant OS Control** screen, power on the system, press F2, and click **System Setup Main Menu** > **System BIOS** > **Redundant OS Control**.

Table 57. Redundant OS Control details

Option	Description
Redundant OS Location	Enables you to select a backup disk from the following devices: • **None** • **BOSS PCIe Cards (Internal M.2 Drives)** • **SATA Port A**
Redundant OS State	**NOTE:** This option is disabled if **Redundant OS Location** is set to **None**. When set to **Visible**, the backup disk is visible to the boot list and OS. When set to **Hidden**, the backup disk is disabled and is not visible to the boot list and OS. This option is set to **Visible** by default. **NOTE:** BIOS disables the device in hardware, so it is not accessed by the OS.
Redundant OS Boot	**NOTE:** This option is disabled if **Redundant OS Location** is set to **None** or if **Redundant OS State** is set to **Hidden**. When set to **Enabled**, BIOS boots to the device specified in **Redundant OS Location**. When set to **Disabled**, BIOS preserves the current boot list settings. This option is set to **Disabled** by default.

Miscellaneous Settings

To view the **Miscellaneous Settings** screen, power on the system, press F2, and click **System Setup Main Menu** > **System BIOS** > **Miscellaneous Settings**.

Table 58. Miscellaneous Settings details

Option	Description
System Time	Enables you to set the time on the system.
System Date	Enables you to set the date on the system.
Time Zone	Enables you to select required Time Zone.
Daylight Savings Time	Enables or disables Daylight Savings Time. This option is set to **Disabled** by default.
Asset Tag	Specifies the asset tag and enables you to modify it for security and tracking purposes.
Keyboard NumLock	Enables you to set whether the system boots with the NumLock enabled or disabled. This option is set to **On** by default. **NOTE:** This option does not apply to 84-key keyboards.
F1/F2 Prompt on Error	Enables or disables the F1/F2 prompt on error. This option is set to **Enabled** by default. The F1/F2 prompt also includes keyboard errors.
Dell Wyse P25/P45 BIOS Access	Enables or disables the Dell Wyse P25/P45 BIOS Access. This option is set to **Enabled** by default.
Power Cycle Request	Enables or disables the Power Cycle Request. This option is set to **None** by default.

Table 58. Miscellaneous Settings details (continued)

Option	Description
ACPI FPDT	Enables or disables ACPI FPDT information. When set to **Enabled**, publishes ACPI Firmware Performance Data Table (FPDT) for OS. This option is set to **Disabled** by default.

iDRAC Settings

The iDRAC settings is an interface to set up and configure the iDRAC parameters by using UEFI. You can enable or disable various iDRAC parameters by using the iDRAC settings.

NOTE: Accessing some of the features on the iDRAC settings needs the iDRAC Enterprise License upgrade.

For more information about using iDRAC, see *Dell Integrated Dell Remote Access Controller User's Guide* at iDRAC Manuals.

Device Settings

Device Settings enables you to configure device parameters such as storage controllers or network cards.

Service Tag Settings

Service Tag Settings enables you to configure the System Service Tag.

Dell Lifecycle Controller

Dell Lifecycle Controller (LC) provides advanced embedded systems management capabilities including system deployment, configuration, update, maintenance, and diagnosis. LC is delivered as part of the iDRAC out-of-band solution and Dell system embedded Unified Extensible Firmware Interface (UEFI) applications.

Embedded system management

The Dell Lifecycle Controller provides advanced embedded system management throughout the lifecycle of the system. The Dell Lifecycle Controller is started during the boot sequence and functions independently of the operating system.

NOTE: Certain platform configurations may not support the full set of features provided by the Dell Lifecycle Controller.

For more information about setting up the Dell Lifecycle Controller, configuring hardware and firmware, and deploying the operating system, see the Dell Lifecycle Controller documentation at iDRAC Manuals.

Boot Manager

The **Boot Manager** option enables you to select boot options and diagnostic utilities.

To enter **Boot Manager**, power on the system and press F11.

Table 59. Boot Manager details

Option	Description
Continue Normal Boot	The system attempts to boot to devices starting with the first item in the boot order. If the boot attempt fails, the system continues with the next item in the boot order until the boot is successful or no more boot options are found.
One-shot UEFI Boot Menu	Enables you to access boot menu, where you can select a one-time boot device to boot from.
Launch System Setup	Enables you to access System Setup.

Table 59. Boot Manager details (continued)

Option	Description
Launch Lifecycle Controller	Exits the Boot Manager and invokes the Dell Lifecycle Controller program.
System Utilities	Enables you to launch System Utilities menu such as Launch Diagnostics, BIOS update File Explorer, Reboot System.

PXE boot

You can use the Preboot Execution Environment (PXE) option to boot and configure the networked systems remotely.

To access the **PXE boot** option, boot the system and then press F12 during POST instead of using standard Boot Sequence from BIOS Setup. It does not pull any menu or allows managing of network devices.

6

Minimum to POST

This section describes the minimum to POST system requirement of the Dell system.

Topics:

- Minimum configuration to POST

Minimum configuration to POST

The components that are listed below are the minimum configuration to POST:

- Processor
- One memory module (DIMM) in slot A1
- One power supply unit
- Power Interposer Board (PIB) if non-cabled PSU is used
- Right Control Panel (RCP) board
- Right Control Panel (RCP) cable
- System board
- CPU heatsink

7

Configuration validation

The new generation of Dell systems have added interconnect flexibility and advanced iDRAC management features to collect precise system configuration information and report configuration errors.

When the system is powered on, information about installed cables, risers, backplanes, power supplies, floating card (fPERC, adapter PERC , BOSS), and processor is obtained from the CPLD and backplane memory maps are analyzed. This information forms a unique configuration, which is compared with one of the qualified configurations that are stored in a table that is maintained by iDRAC.

One or more sensors are assigned to each of the configuration elements. During POST, any configuration validation error is logged in the System Event Log (SEL)/LifeCycle (LC) log. The reported events are categorized in the configuration validation error table.

Table 60. Configuration validation error

Error	Description	Possible cause and recommendations	Example
Config Error	A configuration element within the closest match contains something that is unexpected and does not match any Dell qualified configuration.	Wrong configuration	Config Error: Backplane cable CTRS_SRC_SA1 and BP-DST_SA1
		The element reported in HWC8010 errors are assembled incorrectly. Verify element (cable, risers, etc) placement in the system.	Config Error : SL Cable PLANAR_SL7 and CTRL_DST_PA1
Config Missing	iDRAC found a configuration element missing within the closest match detected.	Missing or damaged cable, device, or part	Config Missing: Float card front PERC/HBAadapter PERC/HBA
		Missing element or cable is reported in HWC8010 error logs. Install the missing element (cable, risers, etc).	Config Missing : SL cable PLANAR_SL8 and CTRL_DST_PA1
Comm Error	A configuration element is not responding to iDRAC using the management interface while running an inventory check.	System management sideband communication	Comm Error: Backplane 2
		Unplug AC Power, reseat the element and replace the element if the problem persists.	

Topics:

- Error messages

Error messages

This section describes the error messages that are displayed on the screen during POST or captured in the system event log (SEL)/LifeCycle (LC) log.

Table 61. Error message HWC8010

Error code	HWC8010
Message	The System Configuration Check operation that is resulted in the following issue involving the indicated component type
Arguments	Riser, floating card (fPERC, adapter PERC, BOSS), backplane, processor, cable, or other components
Detailed Description	The issue that is identified in the message is observed in the System Configuration Check operation.
Recommended Response Action	Do the following and retry the operation: 1. Disconnect the input power. 2. Check for proper cable connection and component placement. If the issue persists, contact the service provider.
Category	System Health (HWC = Hardware Config)
Severity	Critical
Trap/EventID	2329

Table 62. Error message HWC8011

Error code	HWC8011
Message	The System Configuration Check operation that is resulted in multiple issues involving the indicated component type
Arguments	Riser, floating card (fPERC, adapter PERC, BOSS), backplane, processor, cable, or other components
Detailed Description	Multiple issues are observed in the System Configuration Check operation.
Recommended Response Action	Do the following and retry the operation: 1. Disconnect the input power. 2. Check for proper cable connection and component placement. If the issue persists, contact the service provider.
Category	System Health (HWC = Hardware Config)
Severity	Critical

8

Disassembly and reassembly

Topics:

- Safety instructions
- Before working inside your system
- After working inside your system
- Recommended tools
- Optional front bezel
- System cover
- Air shroud
- Cooling fans
- Intrusion switch
- Drive backplane
- Cable routing
- Drives
- System memory
- Processor and heat sink module
- Expansion cards and expansion card risers
- Optional BOSS-N1 module
- System battery
- PERC card
- Power supply units
- Power interposer board (PIB)
- System board
- Trusted Platform Module
- Control panel

Safety instructions

CAUTION: Many repairs may only be done by a certified service technician. You should only perform troubleshooting and simple repairs as authorized in your product documentation, or as directed by the online or telephone service and support team. Damage due to servicing that is not authorized by Dell is not covered by your warranty. Read and follow the safety instructions that are shipped with your product.

NOTE: It is recommended that you always use an antistatic mat and antistatic strap while working on components inside the system.

NOTE: Only use certified Optical Fiber Transceiver Class I Laser Products.

Before working inside your system

Prerequisites

Follow the safety guidelines listed in the Safety instructions.

Steps

1. Power off the system and all attached peripherals.
2. Disconnect the system from the electrical outlet and disconnect the peripherals.

3. If applicable, remove the system from the rack.
   For more information, see the *Rail Installation Guide* relevant to your rail solutions at PowerEdge Manuals.
4. Remove the system cover.

   NOTE:
   While removing the hot-swappable components from the front or rear of the system, do not remove the system cover.

After working inside your system

Prerequisites

Follow the safety guidelines listed in Safety instructions.

Steps

1. Replace the system cover.
2. If applicable, install the system into the rack.
   For more information, see the *Rail Installation Guide* relevant to your system at PowerEdge Manuals.
3. Reconnect the peripherals and connect the system to the electrical outlet, and then power on the system.

Recommended tools

You may need some or all the following tools to perform the removal and installation procedures:

- Key to the bezel lock. The key is required only if your system includes a bezel.
- Phillips 1 screwdriver
- Phillips 2 screwdriver
- Torx T15 screwdriver
- 5 mm hexadecimal nut screwdriver
- Plastic scribe
- 1/4-inch flat blade screwdriver
- Wrist grounding strap that is connected to the ground
- ESD mat
- Needle-nose pliers

Optional front bezel

NOTE: If the filter bezel is installed see the Filter bezel kit topic.

Removing the front bezel

Prerequisites

1. Follow the safety guidelines listed in Safety instructions.
2. Follow the procedure listed in Before working on your system.
3. If installed, remove the system from the rack and place it on an ESD work bench. For more information, see the *Rail Installation Guide* at PowerEdge manuals.
4. Keep the bezel key handy.

   NOTE: The bezel key is part of the bezel package.

Steps

1. Unlock the bezel.
2. Press the release button, and disengage the left end of the bezel.
3. Unhook the right end, and remove the bezel.

   NOTE: The numbers on the image do not depict the exact steps. The numbers are for representation of sequence.

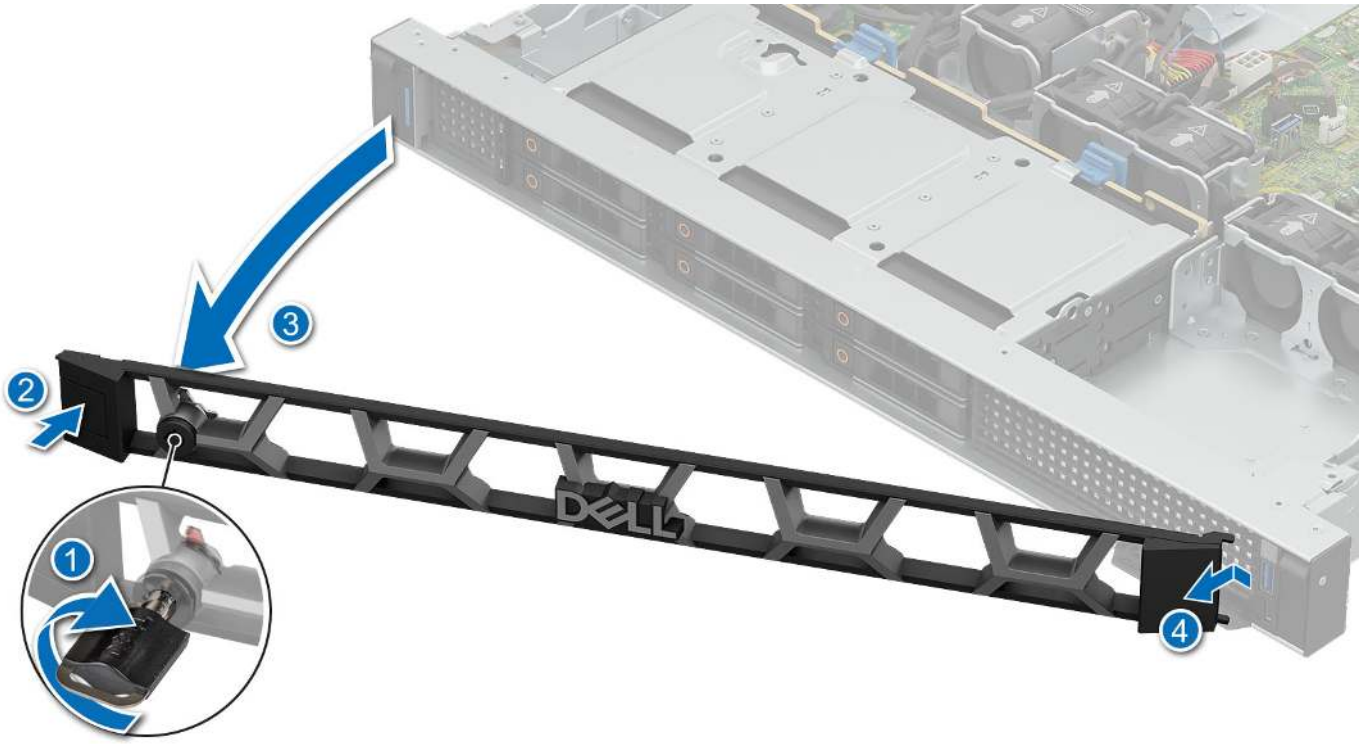

Figure 23. Removing the front bezel

Next steps

Install the front bezel.

Installing the front bezel

Prerequisites

1. Follow the safety guidelines listed in Safety instructions.
2. Follow the procedure listed in Before working on your system.

Steps

1. Align and insert the tabs on the bezel into the slots on the system.
2. Press the bezel until the release button clicks in place.
3. Lock the bezel.

   NOTE: The numbers on the image do not depict the exact steps. The numbers are for representation of sequence.

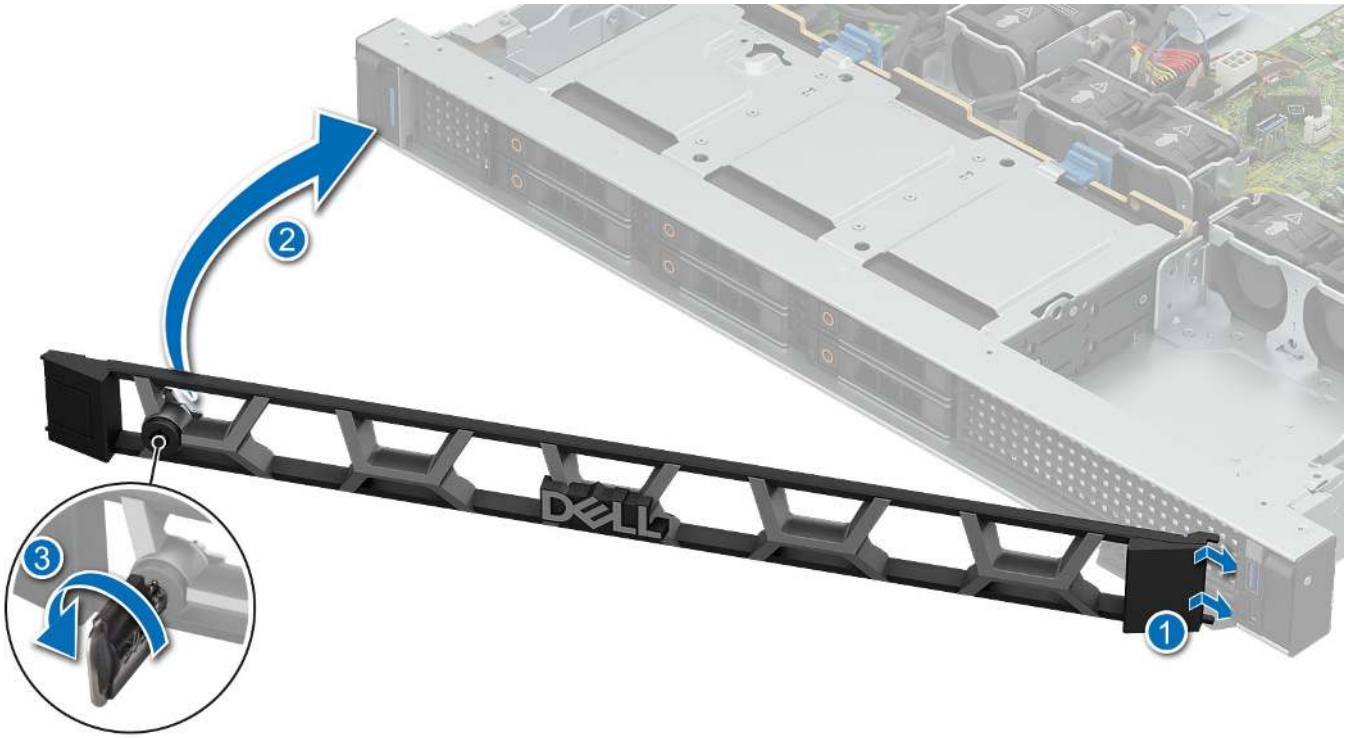

Figure 24. Installing the front bezel

Next steps

1. Follow the procedure listed in After working inside your system.

System cover

Removing the system cover

Prerequisites

1. Follow the safety guidelines listed in Safety instructions.
2. Follow the procedure listed in Before working on your system.

Steps

1. Using a 1/4-inch flat head or Phillips #2 screwdriver, rotate the lock counterclockwise to the unlocked position.
2. Press down on the two release tabs and slide the system cover towards the rear to disengage it.
3. Lift the cover from the system.

NOTE: The numbers on the image do not depict the exact steps. The numbers are for representation of sequence.

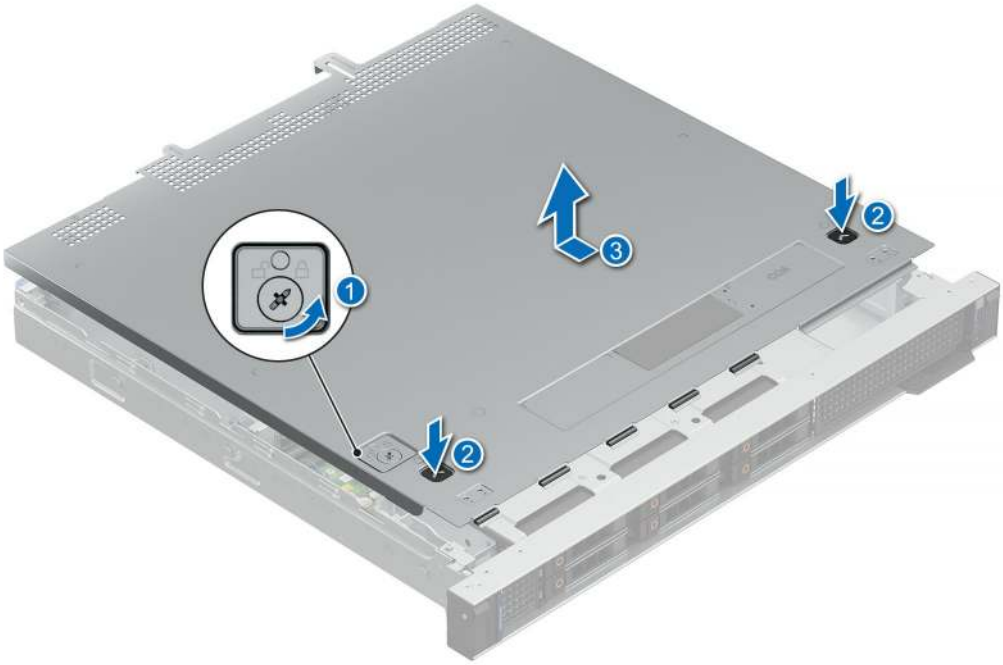

Figure 25. Removing the system cover

Next steps

1. Install the system cover.

Installing the system cover

Prerequisites

1. Follow the safety guidelines listed in Safety instructions.
2. Follow the procedure listed in Before working on your system.

Steps

1. Align the tabs on the system cover with the guide slots on the system.
2. Slide the cover towards the front till it clicks in place.
3. Using a 1/4-inch flat head or Phillips #2 screwdriver, rotate the lock clockwise to the locked position.

   NOTE: The numbers on the image do not depict the exact steps. The numbers are for representation of sequence.

Figure 26. Installing system cover

Next steps

1. Follow the procedure listed in After working inside your system.

Air shroud

Removing the air shroud

Prerequisites

CAUTION: Never operate your system with the air shroud removed. The system may get overheated quickly, resulting in shutdown of the system and loss of data.

1. Follow the safety guidelines listed in Safety instructions.
2. Follow the procedure listed in Before working on your system.
3. Remove the system cover.

Steps

Hold the air shroud at both ends and lift it out of the system.

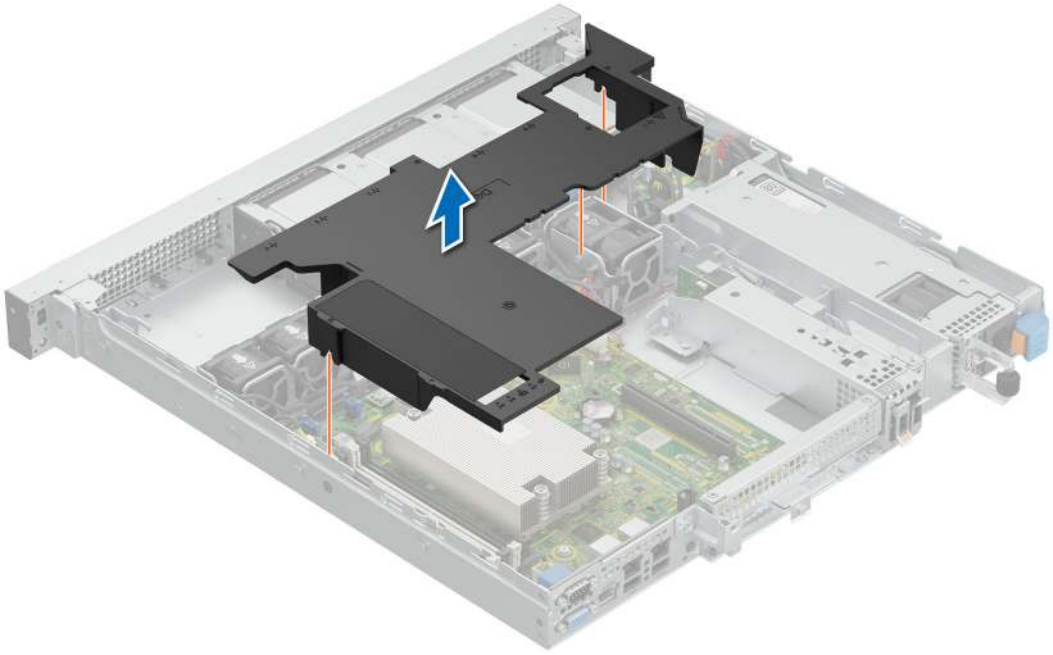

Figure 27. Removing air shroud for 2.5 inch drive configuration

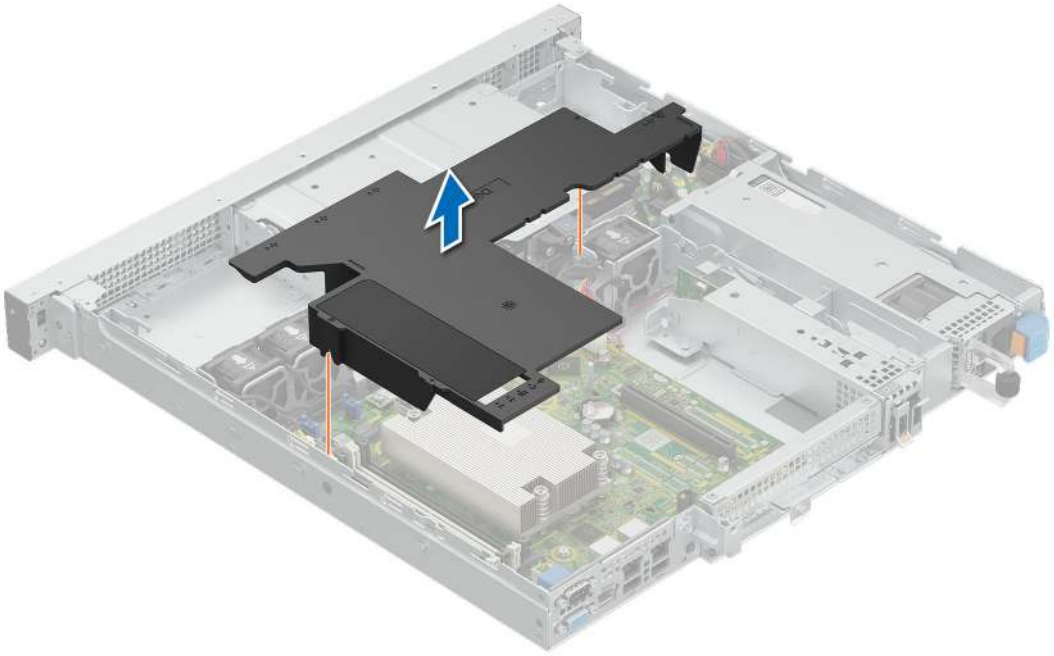

Figure 28. Removing air shroud for 3.5 inch drive configuration

Next steps

Install the air shroud.

Installing the air shroud

Prerequisites

1. Follow the safety guidelines listed in Safety instructions.
2. Follow the procedure listed in Before working on your system.
3. Remove the system cover.

Steps

1. Align the air shroud with the standoffs on the chassis wall.

   NOTE: Route the cable properly to prevent the cable from being pinched or crimped.

2. Lower the air shroud into the system until it is firmly seated.

   NOTE: The numbers on the image do not depict the exact steps. The numbers are for representation of sequence.

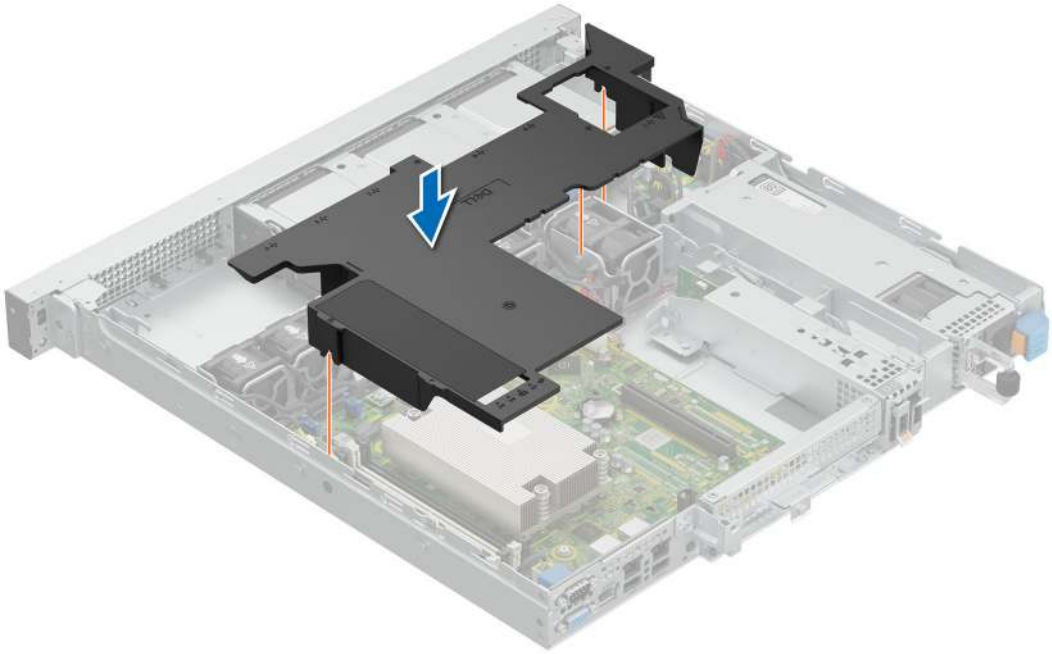

Figure 29. Installing air shroud for 2.5 inch drive configuration

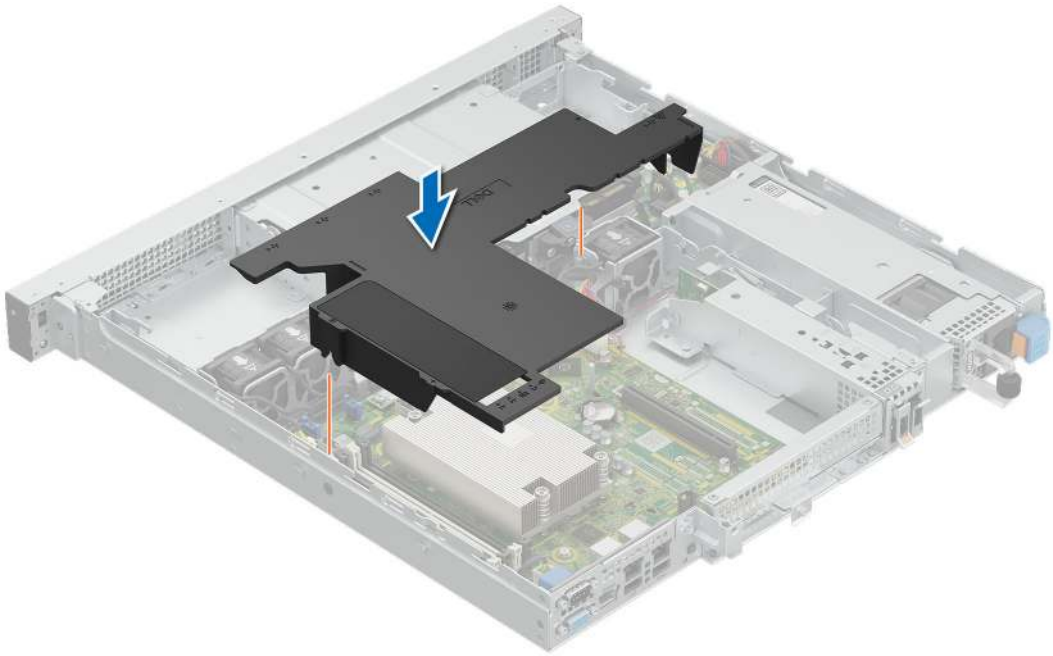

Figure 30. Installing air shroud for 3.5 inch drive configuration

Next steps

1. Install the system cover.
2. Follow the procedure listed in After working inside your system.

Cooling fans

Removing the cooling fan

Prerequisites

1. Follow the safety guidelines listed in Safety instructions.
2. Follow the procedure listed in Before working on your system.
3. Remove the air shroud.

Steps

1. Press the release tabs on the fan cable connector and disconnect the cable from the system board.
2. Lift the cooling fan from the cooling fan cage.

Figure 31. Removing cooling fan

Next steps

1. Install the cooling fan.
2. Follow the procedure listed in After working inside your system.

Installing a cooling fan

Prerequisites

1. Follow the safety guidelines listed in Safety instructions.
2. Follow the procedure listed in Before working on your system.
3. Remove the air shroud.

Steps

1. Lower the cooling fan into the cage until it is seated firmly.
2. Press the release tabs on the fan cable connector and connect the cable to the system board.

Figure 32. Installing a cooling fan

Figure 33. Installing the cooling fan for BOSS-N1 or PCIe Riser

Next steps

1. Install the air shroud.
2. Follow the procedure listed in After working inside your system.

Intrusion switch

Removing the intrusion switch

Prerequisites

1. Follow the safety guidelines listed in Safety instructions.
2. Follow the procedure listed in Before working on your system.
3. Remove the air shroud.

Steps

1. Disconnect and remove the intrusion switch cable from the system board.

   NOTE: Observe the routing of the cable as you remove it from the system. Route the cable properly when you replace it to prevent the cable from being pinched or crimped.

2. Loosen the single captive screw and lift up the intrusion switch assembly from the chassis floor.

   NOTE: The numbers on the image do not depict the exact steps. The numbers are for representation of sequence.

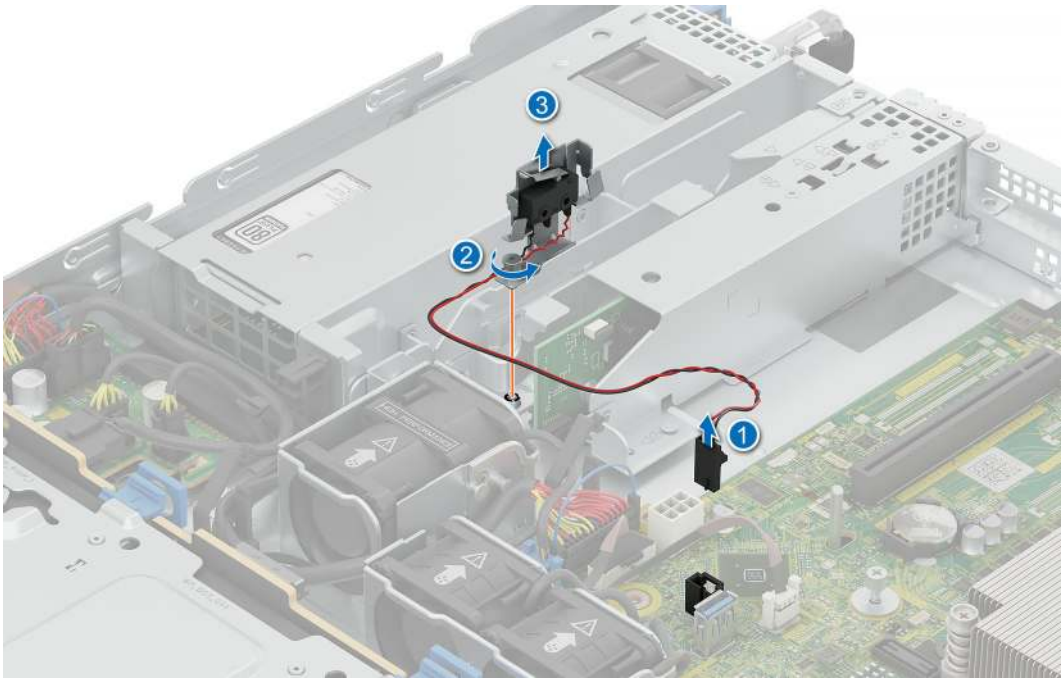

Figure 34. Removing the intrusion switch

Next steps

1. Install the intrusion switch.
2. Follow the procedure listed in After working inside your system.

.

Installing the intrusion switch

Prerequisites

1. Follow the safety guidelines listed in Safety instructions.
2. Follow the procedure listed in Before working on your system.
3. Remove the air shroud.

Steps

1. Align the captive screw with the hole on the chassis floor and lower the intrusion switch assembly.
2. Tighten the captive screw to secure the intrusion switch assembly in place.
3. Connect the intrusion switch cable to the system board.

   NOTE: The numbers on the image do not depict the exact steps. The numbers are for representation of sequence.

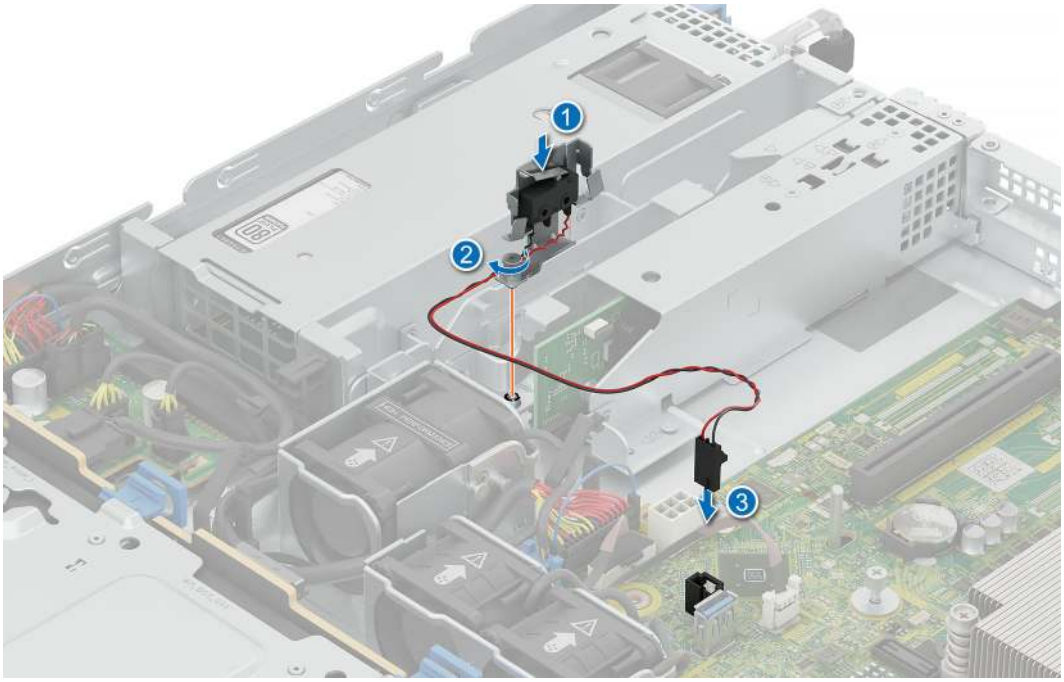

Figure 35. Installing the intrusion switch

4. Connect the intrusion switch cable to the connector on the system board.

   NOTE: Route the cable properly when you replace it to prevent the cable from being pinched or crimped.

Next steps

1. Install the air shroud.
2. Follow the procedure listed in After working inside your system.

Drive backplane

This is a service technician replaceable part only.

Drive backplane guidelines

Depending on your system configuration, the drive backplanes that are supported in PowerEdge R260 are listed here:

Table 63. Supported backplane options for PowerEdge R260 system

System	Supported backplane options
PowerEdge R260	2.5-inch (x6) SAS/SATA/SSD backplane

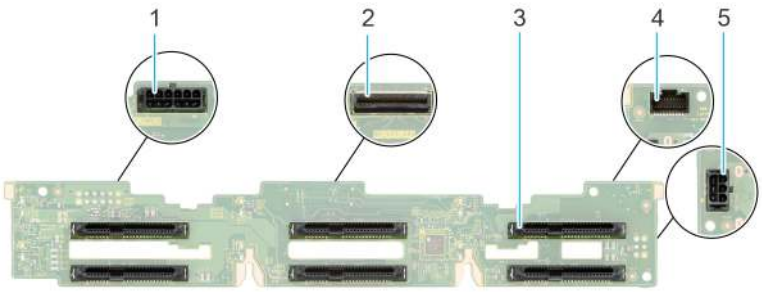

Figure 36. 6 x 2.5-inch SAS/SATA/SSD drive backplane

1. BP_PWR_1 (backplane power and signal cable to PIB)
2. BP_DST_SA1 (SAS/SATA connector)
3. SAS/SATA drive connector
4. P11 Connector
5. BP_PWR_CTRL (backplane power)

Removing the front drive bay backplane

Prerequisites

CAUTION: Note the number of each drive and temporarily label them before you remove the drive so that you can replace them in the same location.

1. Follow the safety guidelines listed in Safety instructions.
2. Follow the procedure listed in Before working on your system.
3. Remove the drives.
4. Disconnect the cables from the backplane.

NOTE: Observe the routing of the cable as you remove it from the system. Route the cable properly when you replace it to prevent the cable from being pinched or crimped.

Steps

1. Press the blue release tabs to disengage the drive backplane from the hooks on the system.
2. Lift the drive backplane out of the system.

NOTE: The numbers on the image do not depict the exact steps. The numbers are for representation of sequence.

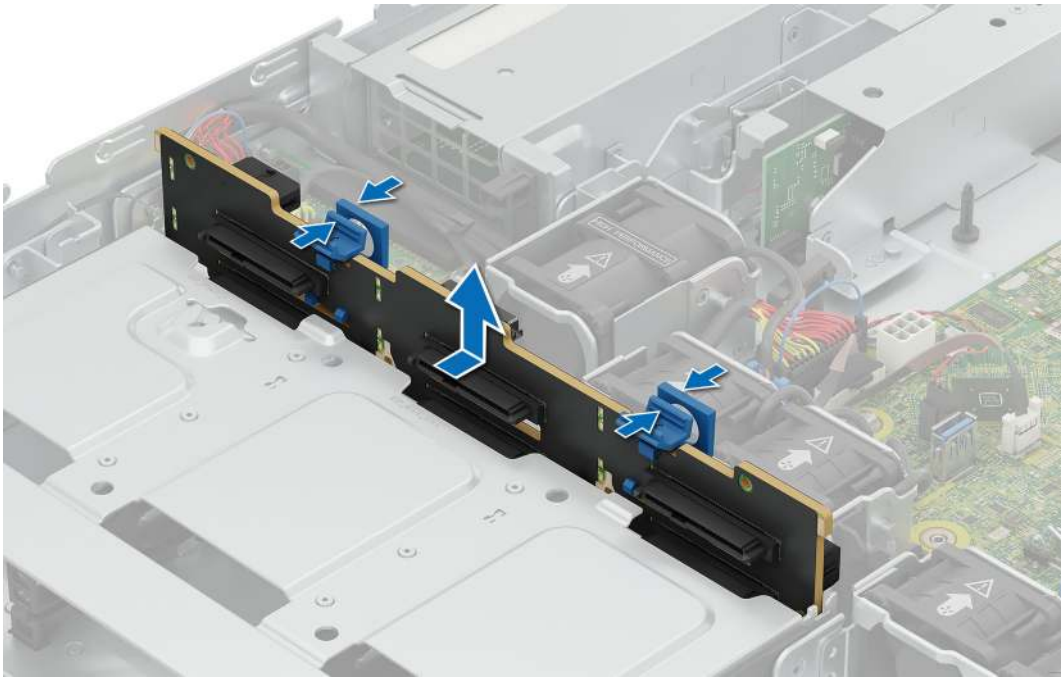

Figure 37. Removing front drive bay backplane

NOTE: To avoid damaging the backplane, ensure that you move the control panel cables from the cable routing clips before removing the backplane.

Next steps

Install the backplane.

Installing the front drive bay backplane

Prerequisites

1. Follow the safety guidelines listed in Safety instructions.
2. Follow the procedure listed in Before working on your system.
3. Remove the drives.
4. Disconnect the cables from the backplane.

NOTE: To avoid damaging the backplane, ensure to move the control panel cables from the cable routing clips before removing the backplane.

NOTE: Route the cable properly when you replace it to prevent the cable from being pinched or crimped.

Steps

1. Align the backplane to the guide hooks on the system.
2. Insert the backplane into the hooks till the blue release tabs click in place.

NOTE: The numbers on the image do not depict the exact steps. The numbers are for representation of sequence.

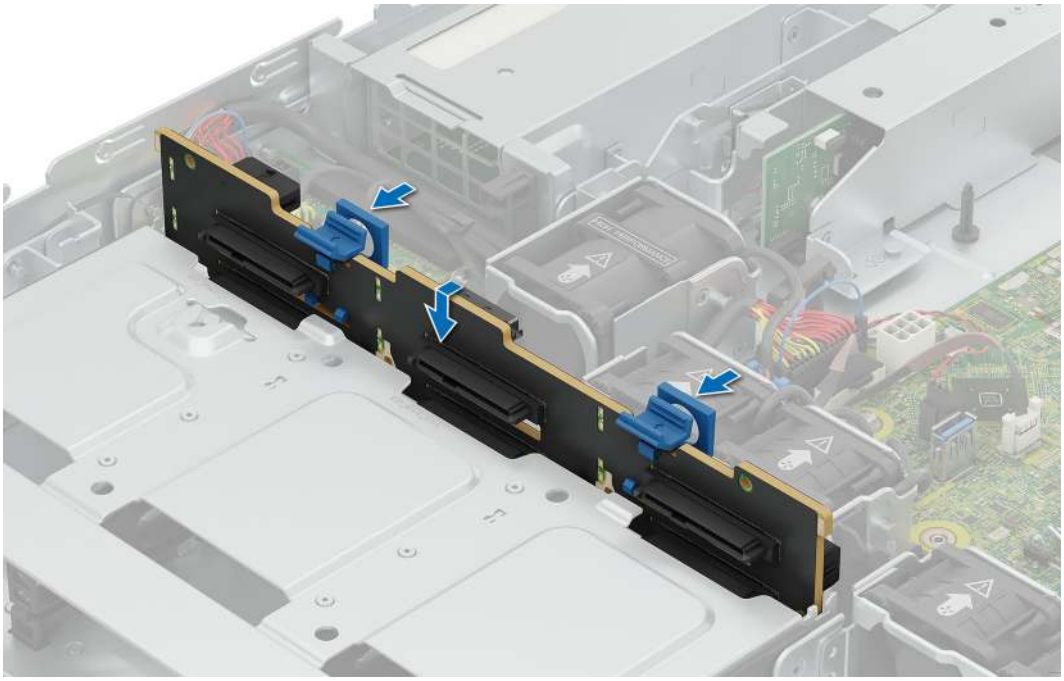

Figure 38. Installing front drive bay backplane

Next steps

1. Connect all the cables to the backplane.
2. Install the drives back into their original locations.
3. Follow the procedure listed in After working inside your system.

Cable routing

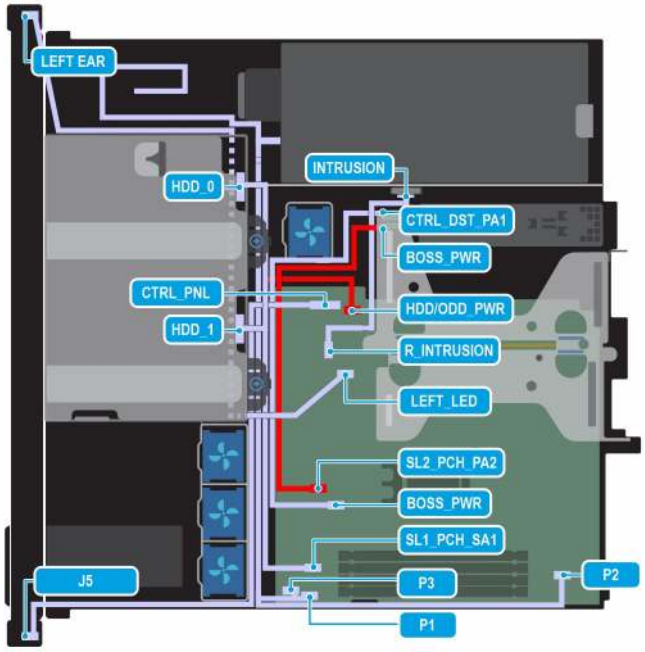

Figure 39. Configuration 0: 2 x 3.5 inch SATA- no Backplane with cable PSU and BOSS-N1 (optional)

NOTE: Follow the sequential order as shown in the table to remove the cables, to install the cables follow the reverse sequential order.

Table 64. Connector descriptions for 2 x 3.5 inch SATA- no Backplane with cable PSU and BOSS-N1 (optional)

Order	From	To
1	CTRL_PNL (system board connector)	J5 (Right control panel)
2	LEFT_LED (system board connector)	Left control panel
3	SL2_PCH_PA2 (system board BOSS connector)	CTRL_DST_PA1 ((BOSS N1 signal connector)
4	BOSS_PWR (system board power connector)	BOSS_PWR (BOSS N1 power connector)
5	SL1_PCH_SA1 (system board SATA signal connector)	HDD 0, HDD 1 (Hard drive connector)
6	R_INTRUSION (system board intrusion switch connector)	INTRUSION (Intrusion switch)
7	P1, P2, P3 (system board power connector)	PSU

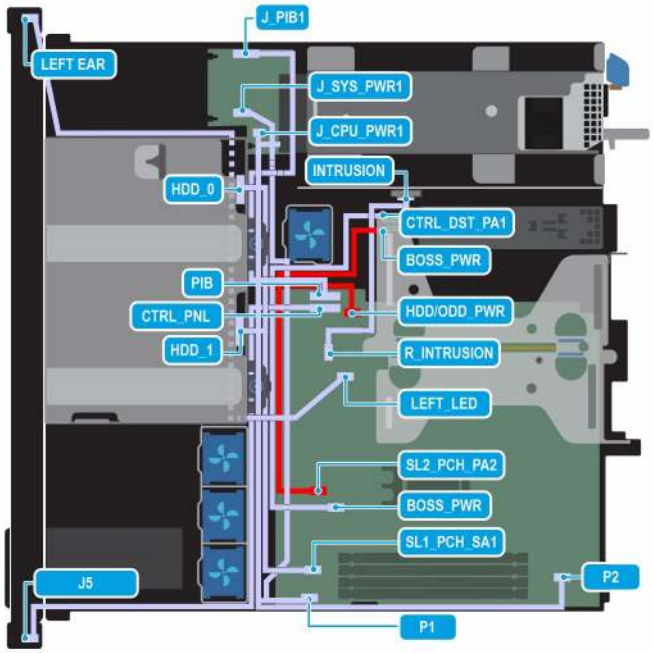

Figure 40. Configuration 1: 2 x 3.5 inch SATA- no Backplane with non cable PSU and BOSS-N1 (optional)

NOTE: Follow the sequential order as shown in the table to remove the cables, to install the cables follow the reverse sequential order.

Table 65. Connector descriptions for 2 x 3.5 inch SATA- no Backplane with non cable PSU and BOSS-N1 (optional)

Order	From	To
1	CTRL_PNL (system board connector)	J5 (Right control panel)
2	LEFT_LED (system board connector)	Left control panel
3	SL2_PCH_PA2 (system board BOSS connector)	CTRL_DST_PA1 ((BOSS N1 signal connector)
4	BOSS_PWR (system board power connector)	BOSS_PWR (BOSS N1 power connector)
5	SL1_PCH_SA1 (system board SATA signal connector)	HDD 0, HDD 1 (Hard drive connector)
6	R_INTRUSION (system board intrusion switch connector)	INTRUSION (Intrusion switch)
7	PIB (system board power connector)	J_PIB1 (PIB power connector)
8	P1 (system board power connector)	J_SYS_PWR1 (PIB power connector)
9	P2 (system board CPU power connector)	J_CPU_PWR1 (PIB CPU power connector)

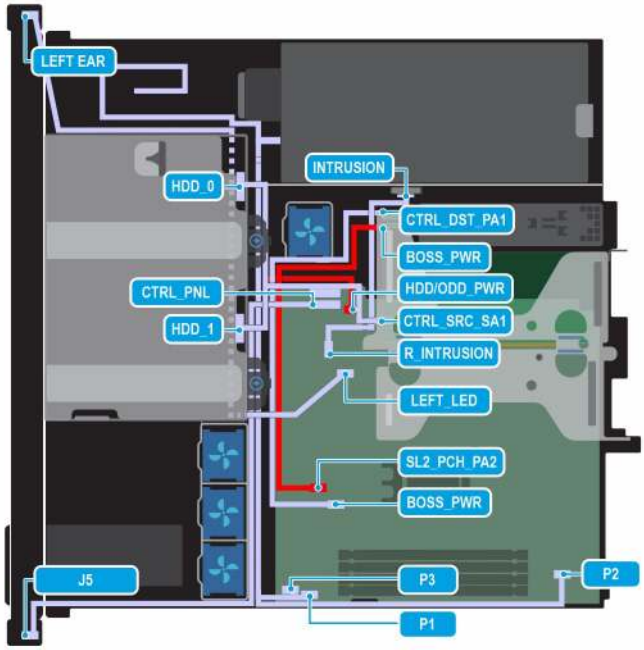

Figure 41. Configuration 2: 2 x 3.5 inch PERC SAS/SATA- no Backplane with cable PSU and BOSS-N1 (optional)

NOTE: Follow the sequential order as shown in the table to remove the cables, to install the cables follow the reverse sequential order.

Table 66. Connector descriptions for 2 x 3.5 inch PERC SAS/SATA- no Backplane with cable PSU and BOSS-N1 (optional)

Order	From	To
1	CTRL_PNL (system board connector)	J5 (Right control panel)
2	LEFT_LED (system board connector)	Left control panel
3	SL2_PCH_PA2 (system board BOSS connector)	CTRL_DST_PA1 ((BOSS N1 signal connector)
4	BOSS_PWR (system board power connector)	BOSS_PWR (BOSS N1 power connector)
5	CTRL_SRC_SA1 (Adapter PERC connector)	HDD 0. HDD 1 (Hard drive connector)
6	R_INTRUSION (system board intrusion switch connector)	INTRUSION (Intrusion switch)
7	P1, P2, P3 (system board power connector)	PSU

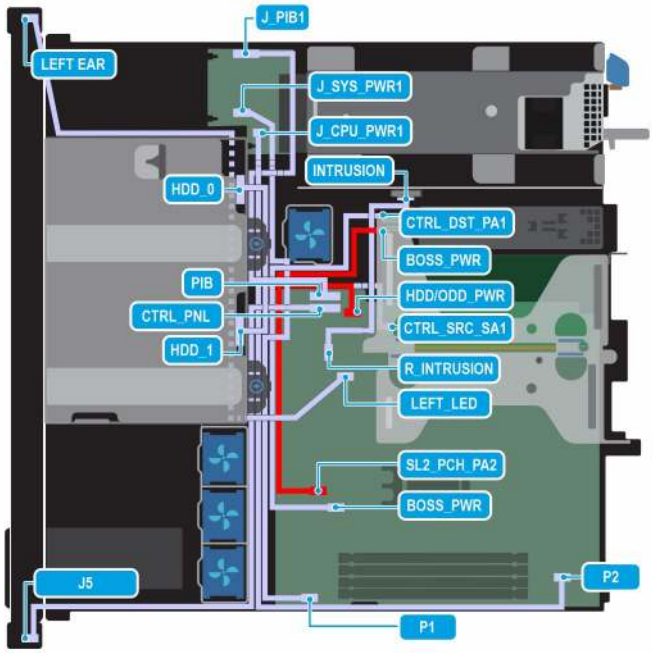

Figure 42. Configuration 3: 2 x 3.5 inch PERC SAS/SATA- no Backplane with non cable PSU and BOSS-N1 (optional)

NOTE: Follow the sequential order as shown in the table to remove the cables, to install the cables follow the reverse sequential order.

Table 67. Connector descriptions for 2 x 3.5 inch PERC SAS/SATA- no Backplane with non cable PSU and BOSS-N1 (optional)

Order	From	To
1	CTRL_PNL (system board connector)	J5 (Right control panel)
2	LEFT_LED (system board connector)	Left control panel
3	SL2_PCH_PA2 (system board BOSS connector)	CTRL_DST_PA1 ((BOSS N1 signal connector)
4	BOSS_PWR (system board power connector)	BOSS_PWR (BOSS N1 power connector)
5	CTRL_SRC_SA1 (Adapter PERC connector)	HDD 0. HDD 1 (Hard drive connector)
6	R_INTRUSION (system board intrusion switch connector)	INTRUSION (Intrusion switch)
7	PIB (system board power connector)	J_PIB1 (PIB power connector)
8	P1 (system board power connector)	J_SYS_PWR1 (PIB power connector)
9	P2 (system board CPU power connector)	J_CPU_PWR1 (PIB CPU power connector)

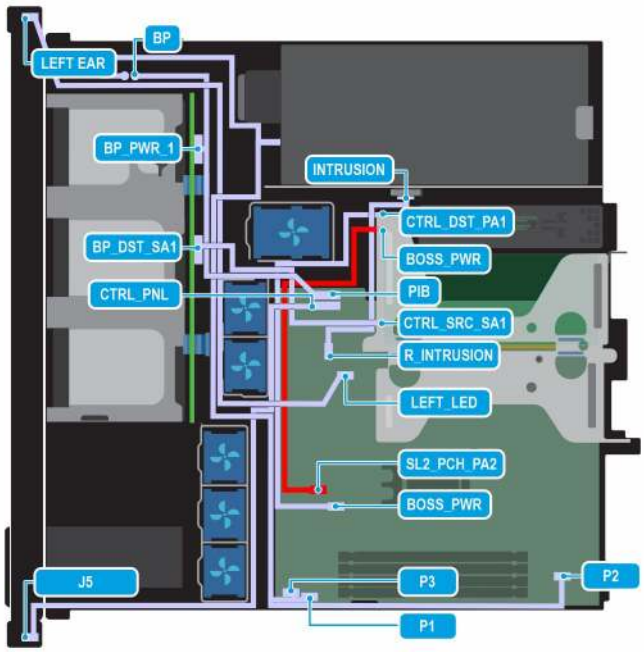

Figure 43. Configuration 4: 6 x 2.5 inch SAS/SATA with cable PSU and BOSS-N1 (optional)

NOTE: Follow the sequential order as shown in the table to remove the cables, to install the cables follow the reverse sequential order.

Table 68. Connector descriptions for 6 x 2.5 inch SAS/SATA with cable PSU and BOSS-N1 (optional)

Order	From	To
1	CTRL_PNL (system board connector)	J5 (Right control panel)
2	LEFT_LED (system board connector)	Left control panel
3	SL2_PCH_PA2 (system board BOSS connector)	CTRL_DST_PA1 ((BOSS N1 signal connector)
4	BOSS_PWR (system board power connector)	BOSS_PWR (BOSS N1 power connector)
5	CTRL_SRC_SA1 (Adapter PERC connector)	BP_DST_SA1 (backplane connector)
6	BP_PWR_1 (Backplane power connector)	PSU
7	R_INTRUSION (system board intrusion switch connector)	INTRUSION (Intrusion switch)
8	P1, P2, P3 (system board power connector)	PSU

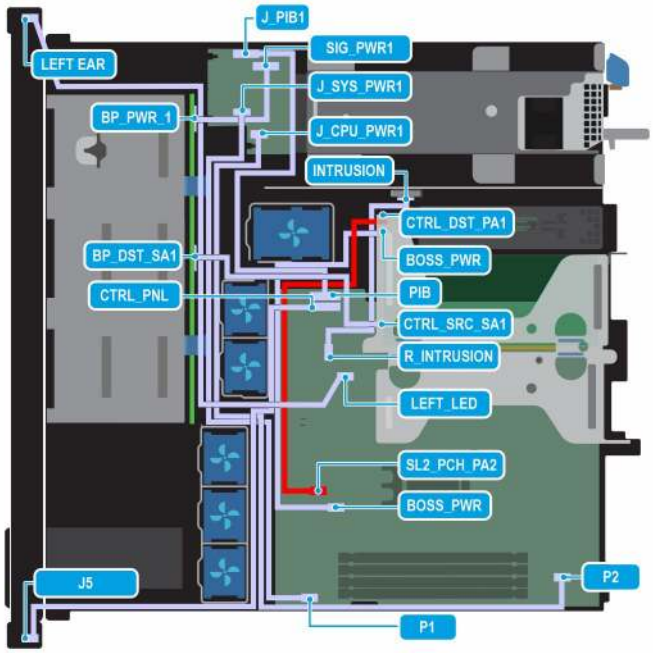

Figure 44. Configuration 5: 6 x 2.5 inch SAS/SATA with non cable PSU and BOSS-N1 (optional)

NOTE: Follow the sequential order as shown in the table to remove the cables, to install the cables follow the reverse sequential order.

Table 69. Connector descriptions for 6 x 2.5 inch SAS/SATA with cable PSU and BOSS-N1 (optional)

Order	From	To
1	CTRL_PNL (system board connector)	J5 (Right control panel)
2	LEFT_LED (system board connector)	Left control panel
3	SL2_PCH_PA2 (system board BOSS connector)	CTRL_DST_PA1 ((BOSS N1 signal connector)
4	BOSS_PWR (system board power connector)	BOSS_PWR (BOSS N1 power connector)
5	CTRL_SRC_SA1 (Adapter PERC connector)	BP_DST_SA1 (Backplane connector)
6	R_INTRUSION (system board intrusion switch connector)	INTRUSION (Intrusion switch)
7	PIB (system board power connector)	J_PIB1 (PIB power connector)
8	P1 (system board power connector)	J_SYS_PWR1 (PIB power connector)
9	P2 (system board CPU power connector)	J_CPU_PWR1 (PIB CPU power connector)
10	SIG_PWR1 (PIB power connector)	BP_PWR_1 (backplane power connector)

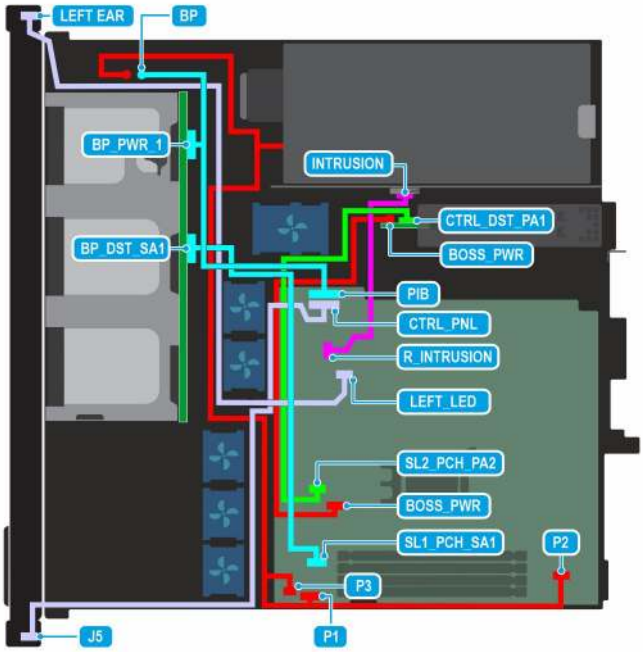

Figure 45. Configuration 6: 4 x 2.5 inch SATA with cable PSU and BOSS-N1 (optional)

NOTE: Follow the sequential order as shown in the table to remove the cables, to install the cables follow the reverse sequential order.

Table 70. Connector descriptions for 6: 4 x 2.5 inch SATA with cable PSU and BOSS-N1 (optional)

Order	From	To
1	CTRL_PNL (system board connector)	J5 (Right control panel)
2	LEFT_LED (system board connector)	Left control panel
3	SL2_PCH_PA2 (system board BOSS connector)	CTRL_DST_PA1 ((BOSS N1 signal connector)
4	BOSS_PWR (system board power connector)	BOSS_PWR (BOSS N1 power connector)
5	BP_PWR_1 (Backplane power connector)	PSU
6	R_INTRUSION (system board intrusion switch connector)	INTRUSION (Intrusion switch)
7	P1, P2, P3 (system board power connector	PSU
8	SL1_PCH_SA1 (system board SATA signal connector)	BP_DST_SA1 (backplane connector)

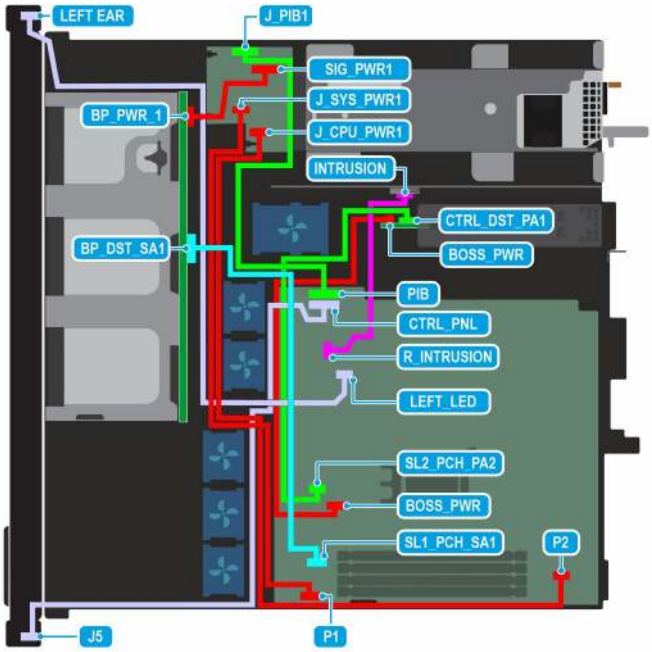

Figure 46. Configuration 7: 4 x 2.5 inch SATA with non cable PSU and BOSS-N1 (optional)

NOTE: Follow the sequential order as shown in the table to remove the cables, to install the cables follow the reverse sequential order.

Table 71. Connector descriptions for 4 x 2.5 inch SATA with non cable PSU and BOSS-N1 (optional)

Order	From	To
1	CTRL_PNL (system board connector)	J5 (Right control panel)
2	LEFT_LED (system board connector)	Left control panel
3	SL2_PCH_PA2 (system board BOSS connector)	CTRL_DST_PA1 ((BOSS N1 signal connector)
4	BOSS_PWR (system board power connector)	BOSS_PWR (BOSS N1 power connector)
5	R_INTRUSION (system board intrusion switch connector)	INTRUSION (Intrusion switch)
6	PIB (system board power connector)	J_PIB1 (PIB power connector)
7	P1 (system board power connector)	J_SYS_PWR1 (PIB power connector)
8	P2 (system board CPU power connector)	J_CPU_PWR1 (PIB CPU power connector)
9	SIG_PWR1 (PIB power connector)	BP_PWR_1 (backplane power connector)
10	SL1_PCH_SA1 (system board SATA signal connector)	BP_DST_SA1 (backplane connector)

Drives

Removing a drive blank

Prerequisites

1. Follow the safety guidelines listed in Safety instructions.
2. Follow the procedure listed in Before working on your system.

CAUTION: To maintain proper system cooling, drive blanks must be installed in all empty drive slots.

CAUTION: Mixing drive blanks from previous generations of PowerEdge servers is not supported.

Steps

Press the release button, and slide the drive blank out of the drive slot.

Figure 47. Removing a drive blank

Next steps

Install the hard drive blank.

Installing a drive blank

Prerequisites

1. Follow the safety guidelines listed in Safety instructions.
2. Follow the procedure listed in Before working on your system.

CAUTION: To maintain proper system cooling, drive blanks must be installed in all empty drive slots.

CAUTION: Mixing drive blanks from previous generations of PowerEdge servers is not supported.

Steps

Insert the drive blank into the drive slot, and push the blank until the release button clicks into place.

Figure 48. Installing a drive blank

Removing a drive carrier

Prerequisites

1. Follow the safety guidelines listed in Safety instructions.
2. Follow the procedure listed in Before working on your system.
3. Using the management software, prepare the drive for removal.

NOTE: If the drive is online, the green activity or fault indicator flashes while the drive is turning off. When the drive indicators are off, the drive is ready for removal. For more information, see the documentation for the storage controller.

CAUTION: Before attempting to remove or install a drive while the system is running, see the documentation for the storage controller card to ensure that the host adapter is configured correctly to support drive removal and insertion.

CAUTION: Mixing drives from previous generations of PowerEdge servers is not supported.

CAUTION: To prevent data loss, ensure that your operating system supports drive installation. See the documentation supplied with your operating system.

Steps

1. Press the release button to open the drive carrier release handle.
2. Holding the handle, slide the drive carrier out of the drive slot.

NOTE: The numbers on the image do not depict the exact steps. The numbers are for representation of sequence.

Figure 49. Removing a drive carrier

Next steps

1. Install the drive carrier.
2. If you are not replacing the drive immediately, Install the hard drive blank in the empty drive slot to maintain proper system cooling.

Removing the drive from the drive carrier

Prerequisites

CAUTION: Mixing drives from previous generations of PowerEdge servers is not supported.

Steps

1. Using a Phillips #1 screwdriver, remove the screws from the slide rails on the drive carrier.

   NOTE: If the hard drive or SSD carrier has a Torx screw, use Torx 6 (for 2.5-inch drive) or Torx 8 (for 3.5-inch drive) screwdriver to remove the drive.

2. Lift the drive out of the drive carrier.

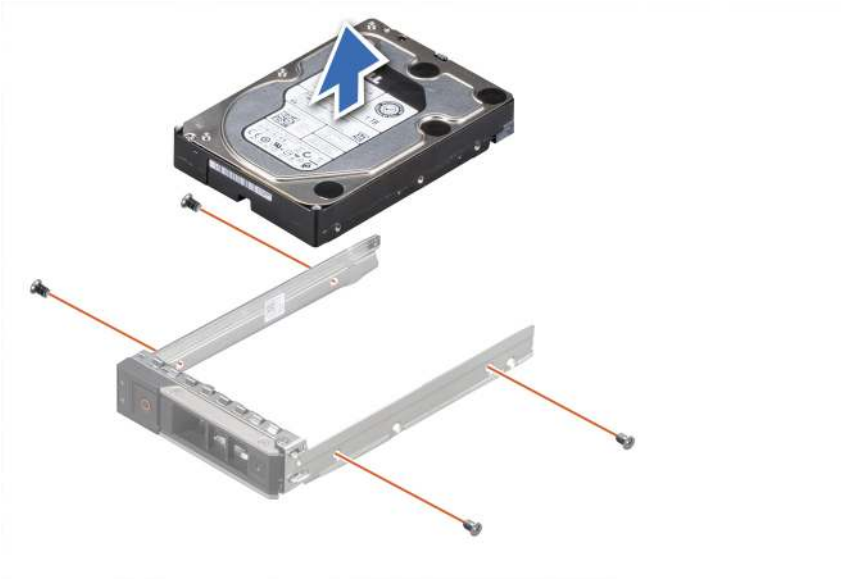

Figure 50. Removing the drive from the drive carrier

Next steps

If applicable, Install the drive in to the drive carrier.

Installing a drive into the drive carrier

Prerequisites

CAUTION: Mixing drive carriers from other generations of PowerEdge servers is not supported.

Steps

1. Insert the drive into the drive carrier with the connector end of the drive towards the back of the carrier.
2. Align the screw holes on the drive with the screw holes on the drive carrier.
3. Using a Phillips #1 screwdriver, replace the screws to secure the drive to the drive carrier.

   NOTE: If the hard drive or SSD carrier has a Torx screw, use Torx 6 (for 2.5-inch drive) or Torx 8 (for 3.5-inch drive) screwdriver to install the drive.

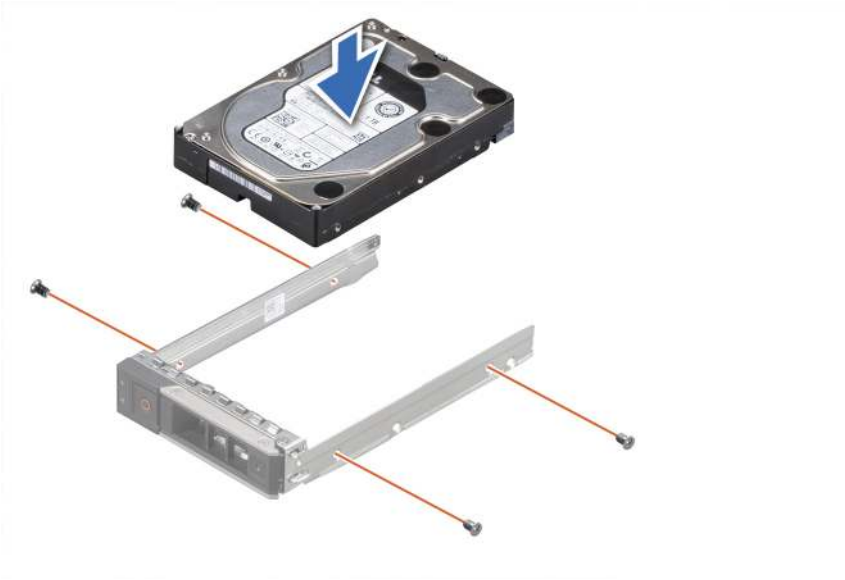

Figure 51. Installing a drive into the drive carrier

Next steps

Install a drive carrier.

Installing a drive carrier

Prerequisites

CAUTION: Before attempting to remove or install a drive while the system is running, see the documentation for the storage controller card to ensure that the host adapter is configured correctly to support drive removal and insertion.

CAUTION: Mixing drives from previous generations of PowerEdge servers is not supported.

CAUTION: Combining SAS and SATA drives in the same RAID volume is not supported.

CAUTION: When installing a drive, ensure that the adjacent drives are installed correctly. Inserting a drive carrier and attempting to lock its handle next to an incorrectly installed carrier can damage the incorrectly installed carrier's shield spring, making it unusable.

CAUTION: To prevent data loss, ensure that your operating system supports hot-swap drive installation. See the documentation supplied with your operating system.

NOTE: When a replacement hot swappable drive is installed while the system is powered on, the drive automatically begins to rebuild. Ensure that the replacement drive is blank. Any data on the replacement drive is immediately lost once the drive is installed.

1. Follow the safety guidelines listed in Safety instructions.
2. Follow the procedure listed in Before working on your system.
3. If installed, remove the hard drive blank.

Steps

1. Press the release button on the front of the drive carrier to open the release handle.
2. Insert and slide the drive carrier into the drive slot.
3. Close the drive carrier release handle until it clicks in place.

NOTE: The numbers on the image do not depict the exact steps. The numbers are for representation of sequence.

Figure 52. Installing a drive carrier

Removing a 3.5 inch cabled hard drive

Prerequisites

1. Follow the safety guidelines listed in Safety instructions.
2. Follow the procedure listed in Before working on your system.
3. Using the management software, prepare the drive for removal.

NOTE: If the drive is online, the green activity or fault indicator flashes while the drive is turning off. When the drive indicators are off, the drive is ready for removal. For more information, see the documentation for the storage controller.

CAUTION: Before attempting to remove or install a drive while the system is running, see the documentation for the storage controller card to ensure that the host adapter is configured correctly to support drive removal and insertion.

CAUTION: Mixing drives from previous generations of PowerEdge servers is not supported.

CAUTION: To prevent data loss, ensure that your operating system supports drive installation. See the documentation supplied with your operating system.

Steps

1. Disconnect the cables from the rear of the hard drive.
2. Press down the release latch and slide the hard drive out from the front of the system.

NOTE: The numbers on the image do not depict the exact steps. The numbers are for representation of sequence.

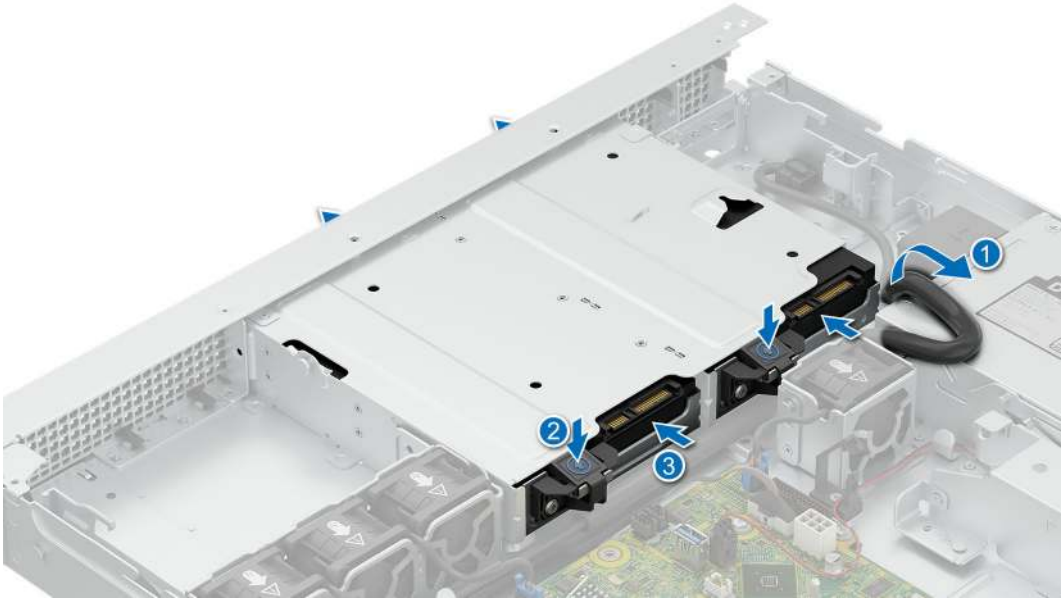

Figure 53. Removing a 3.5 inch cabled hard drive

Next steps

1. Install the 3.5 inch hard drive.
2. If you are not replacing the drive immediately, Install the hard drive blank in the empty drive slot to maintain proper system cooling.

Installing a 3.5 inch cabled hard drive

Prerequisites

CAUTION: Before attempting to remove or install a drive while the system is running, see the documentation for the storage controller card to ensure that the host adapter is configured correctly to support drive removal and insertion.

CAUTION: Mixing drives from previous generations of PowerEdge servers is not supported.

CAUTION: Combining SAS and SATA drives in the same RAID volume is not supported.

CAUTION: When installing a drive, ensure that the adjacent drives are installed correctly. Inserting a drive carrier and attempting to lock its handle next to an incorrectly installed carrier can damage the incorrectly installed carrier's shield spring, making it unusable.

CAUTION: To prevent data loss, ensure that your operating system supports hot-swap drive installation. See the documentation supplied with your operating system.

NOTE: When a replacement hot swappable drive is installed while the system is powered on, the drive automatically begins to rebuild. Ensure that the replacement drive is blank. Any data on the replacement drive is immediately lost once the drive is installed.

1. Follow the safety guidelines listed in Safety instructions.
2. Follow the procedure listed in Before working on your system.
3. If installed, remove the hard drive blank.

Steps

1. Pull the power supply unit (PSU) cable out before installing the hard drives.
2. Insert the drive from the front of the system till it clicks in place..
3. Connect the cables to the rear of the drive.

   NOTE: The numbers on the image do not depict the exact steps. The numbers are for representation of sequence.

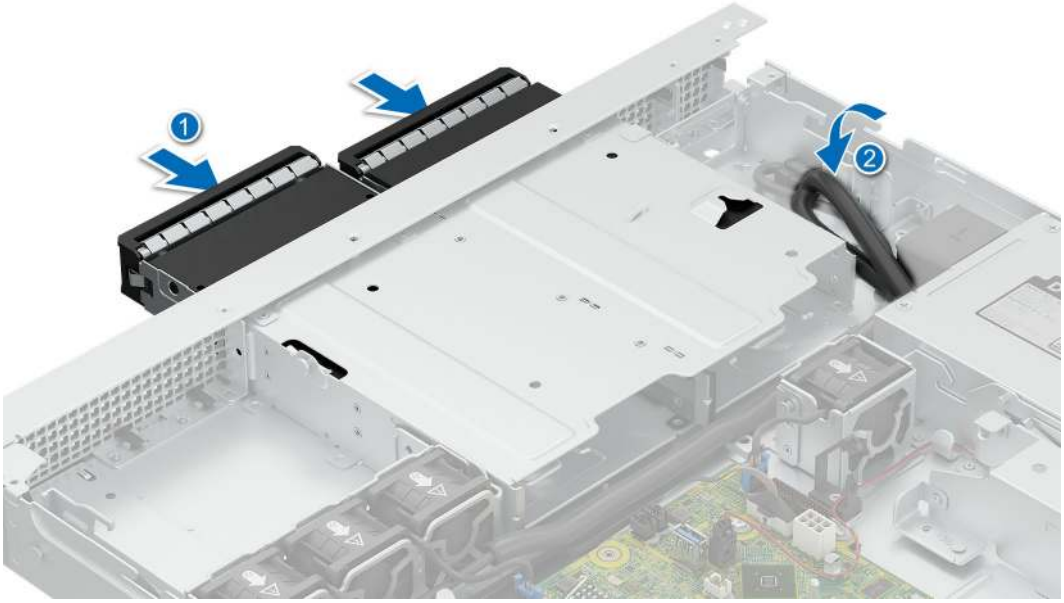

Figure 54. Installing a 3.5 inch cabled hard drive

NOTE: Route the PSU cable back in the original position after installing the drive.

System memory

System memory guidelines

The PowerEdge R260 system supports DDR5 ECC unbuffered DIMMs (UDIMMs).

Your system memory is organized into two channels per processor (two memory sockets per channel), four memory sockets per system.

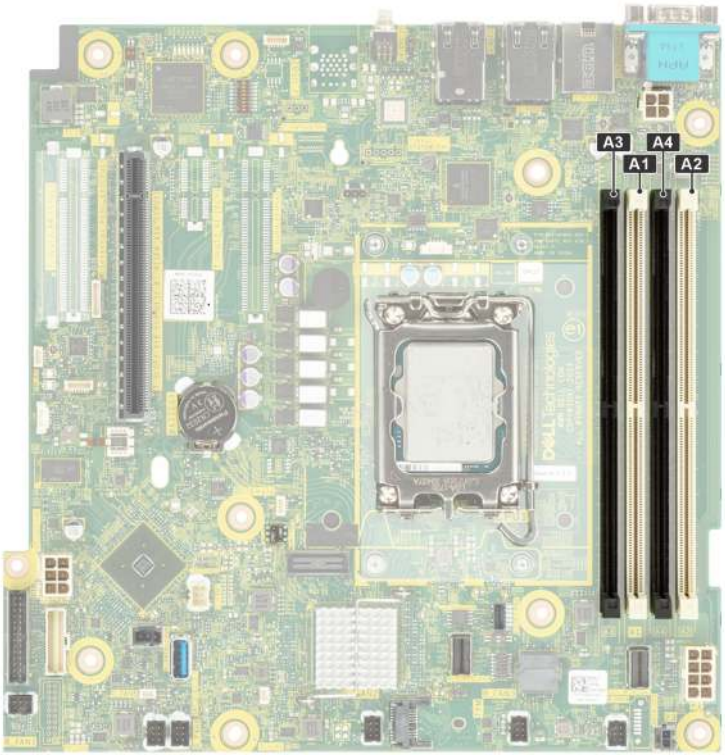

Figure 55. Memory channels

Memory channels are organized as follows:

Table 72. Memory channels

Processor	Channel A	Channel B
Processor 1	A1, A3	A2, A4

Table 73. Supported memory matrix

DIMM type	Rank	Capacity	DIMM rated voltage and speed	Operating Speed	
				1 DIMM per channel (DPC)	2 DIMM per channel (DPC)
ECC UDIMM	1 R	16 GB	DDR5 (1.1 V), 5600 MT/s	4400 MT/s	4000 MT/s
	2 R	32 GB	DDR5 (1.1 V), 5600 MT/s	4400 MT/s	3600 MT/s

NOTE: The processor may reduce the performance of the rated DIMM speed.

General memory module installation guidelines

To ensure optimal performance of your system, observe the following general guidelines when configuring your system memory. If your system's memory configuration fails to observe these guidelines, your system might not boot, stop responding during memory configuration, or operate with reduced memory.

The memory bus may operate at speeds of 4400 MT/s, 4000 MT/s, or 3600 MT/s depending on the following factors:

- System profile selected (for example, Performance, Performance Per Watt Optimized (OS), or Custom [can be run at high speed or lower])

- Maximum supported DIMM speed of the processors
- Maximum supported speed of the DIMMs

NOTE: MT/s indicates DIMM speed in Mega-Transfers per second.

The following are the recommended guidelines for installing memory modules:

- All DIMMs must be DDR5.
- DIMM mixing configurations is not supported. All DIMM slots must be populated with the exact same DIMMs.
- If memory modules with different speeds are installed, they operate at the speed of the slowest installed memory module(s).
- Populate memory module sockets only if a processor is installed.
  - For single-processor systems, sockets A1 to A4 are available.
  - A minimum of 1 DIMM must be populated for the installed processor.
- In **Optimizer Mode**, the DRAM controllers operate independently in the 64-bit mode and provide optimized memory performance.
- Populate all the sockets with white release tabs first.
- Unbalanced memory configurations result in a performance loss. Always populate memory channels identically with equal DIMMs for the best performance.
- Refer to the following table for the population matrix.

Table 74. Memory population rules

Processor	Memory population	Memory population information
Single processor	A{1}, A{2}, A{3}, A{4}	1, 2, 3, 4 DIMMs are allowed.

NOTE: Equal memory modules refer to DIMMs with identical electrical specification and capacity that may be from different vendors.

Table 75. Table showing supported DIMM population

Configuration	Number of DIMMs	Channel A		Channel B		Status	DIMM Ratings	Speed up to (in MT/s)
		A3	A1	A4	A2			
1	1	-	-	-	1	Supported	1R	4400
							2R	4400
2	2	-	-	1	1	Supported	1R	4000
							2R	3600
3	1	-	1	-	-	Supported - Best Performance	1R	4400
							2R	4400
4	2	-	1	-	1	Supported - Best Performance	1R	4400
							2R	4400
5	3	-	1	1	1	Supported	1R	4000
							2R	3600
6	2	1	1	-	-	Supported	1R	4000
							2R	3600
7	3	1	1	-	1	Supported	1R	4000
							2R	3600
8	4	1	1	1	1	Supported - Best Performance	1R	4000
							2R	3600

Removing a memory module

Prerequisites

1. Follow the safety guidelines listed in Safety instructions.
2. Follow the procedure listed in Before working on your system.
3. Remove the system from the rack and place it on an ESD work bench. For more information, see the *Rail Installation Guide* at PowerEdge manuals.
4. Remove the air shroud.

Steps

1. Push the ejectors outward on both ends of the memory module socket to release the memory module from the socket.
2. Lift and remove the memory module from the system.

   CAUTION: Handle memory modules only by the card edges, ensuring not to touch the middle of the memory module or metallic contacts.

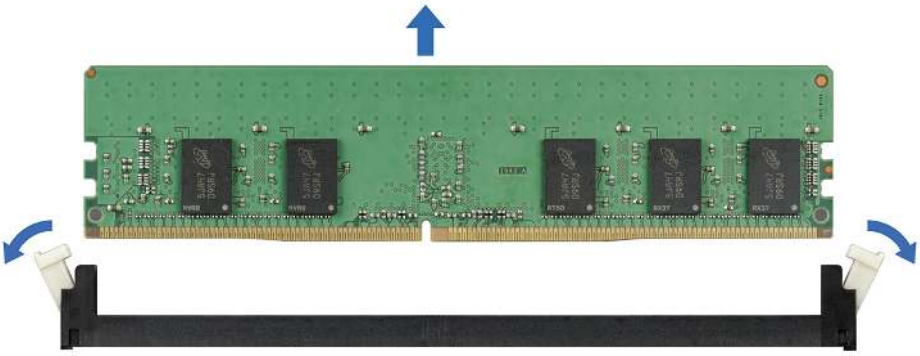

Figure 56. Removing a memory module

Next steps

Install the memory module.

Installing a memory module

Prerequisites

1. Follow the safety guidelines listed in Safety instructions.
2. Follow the procedure listed in Before working on your system.
3. Remove the system from the rack and place it on an ESD work bench. For more information, see the *Rail Installation Guide* at PowerEdge manuals.
4. Remove the air shroud.
5. Locate the appropriate memory module socket..

NOTE: The procedure to remove a memory module blank is similar to the procedure to remove a memory module. Retain the removed memory module blank for future use.

Steps

1. Open the ejectors on the memory module socket outward to allow the memory module to be inserted into the socket.
2. Align the edge connector of the memory module with the alignment key of the memory module socket, and insert the memory module in the socket.

   CAUTION: Handle each memory module only by the card edges, ensuring not to touch the middle of the memory module or metallic contacts.

NOTE: The memory module socket has an alignment notch that enables you to install the memory module in the socket in only one orientation.

3. Press the memory module with your thumbs until the ejectors firmly click into place.

CAUTION: To prevent damage to the memory module or the memory module socket during installation, do not bend or flex the memory module. You must insert both ends of the memory module simultaneously.

CAUTION: Do not apply pressure at the center of the memory module; apply pressure at both ends of the memory module evenly.

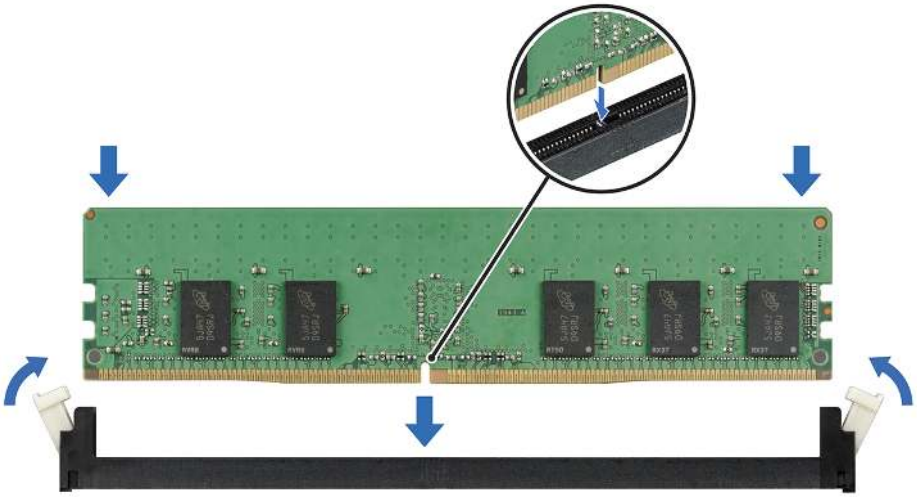

Figure 57. Installing a memory module

Next steps

1. Instal the air shroud.
2. Follow the procedure listed in After working inside your system.
3. To verify if the memory module has been installed properly, press F2 and navigate to **System Setup Main Menu > System BIOS > Memory Settings**. In the **Memory Settings** screen, the System Memory Size must reflect the updated capacity of the installed memory.
4. If the value is incorrect, one or more of the memory modules may not be installed properly. Ensure that the memory module is firmly seated in the memory module socket.
5. Run the system memory test in system diagnostics.

Processor and heat sink module

This is a service technician replaceable part only.

Removing the heat sink module

Prerequisites

1. Follow the safety guidelines listed in the Safety instructions.
2. Follow the procedure listed in the Before working inside your system.
3. Remove the air shroud.

NOTE: The heat sink and processor are hot to touch for some time after the system has been powered off. Allow the heat sink and processor to cool down before handling them.

Steps

1. Using a screwdriver, loosen the screws on the heat sink in the order below:
   a. Loosen the first screw three turns.
   b. Loosen the rest of the screws in the order numbered.
   c. Return to the first screw and loosen it completely.
2. Lift the heat sink from the system.

   NOTE: The numbers on the image do not depict the exact steps. The numbers are for representation of sequence.

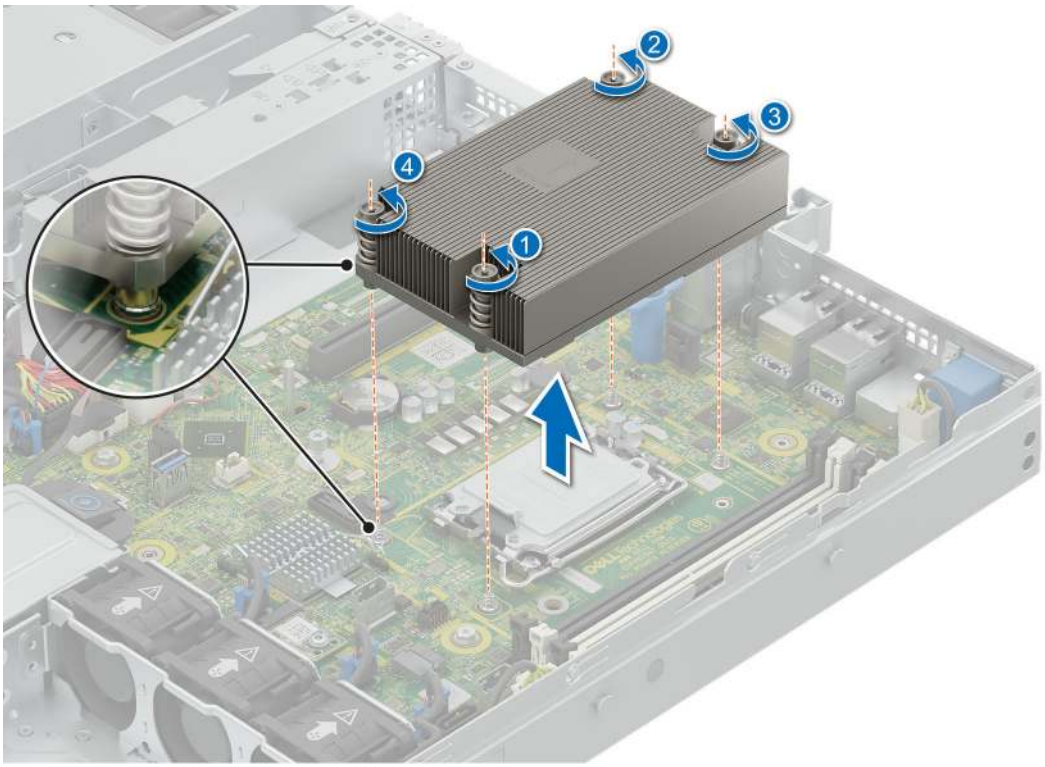

Figure 58. Removing the heat sink module

Next steps

If you are removing a faulty heat sink Install the heatsink, if not remove the procesor.

Removing the processor

Prerequisites

WARNING: Remove the processor from processor and heat sink module (PHM) only if you are replacing the processor or heat sink.

1. Follow the safety guidelines listed in the Safety instructions.
2. Follow the procedure listed in the Before working inside your system.
3. Remove the air shroud.
4. Remove the heatsink.

CAUTION: You may find the CMOS battery loss or CMOS checksum error that is displayed during the first instance of powering on the system after the processor or system board replacement which is expected. To fix this, simply go to setup option to configure the system settings.

Steps

1. Release the socket lever by pushing the lever down and then out from under the tab on the processor shield.

2. Lift the lever upward until the processor shield lifts.

   CAUTION: The processor socket pins are fragile and can be permanently damaged. Be careful not to bend the pins in the processor socket when removing the processor out of the socket.

3. Holding the processor by the edges, lift the processor out of the socket.

   NOTE: The numbers on the image do not depict the exact steps. The numbers are for representation of sequence.

Figure 59. Removing the processor

Next steps

Install the processor.

Installing the processor

Prerequisites

1. Follow the safety guidelines listed in the Safety instructions.
2. Follow the procedure listed in Before working inside your system.
3. Remove the air shroud.
4. Remove the heatsink.

Steps

1. Align the pin 1 indicator of the processor with the triangle on the socket and place the processor on the socket.

   NOTE: Positioning the processor incorrectly can permanently damage the system board or the processor. Be careful not to bend the pins in the socket.

2. Lower the socket lever and push it under the tab to lock it.

   NOTE: If the processor has previously been used in a system, remove any remaining thermal grease from the processor by using a lint-free cloth.

   NOTE: The numbers on the image do not depict the exact steps. The numbers are for representation of sequence.

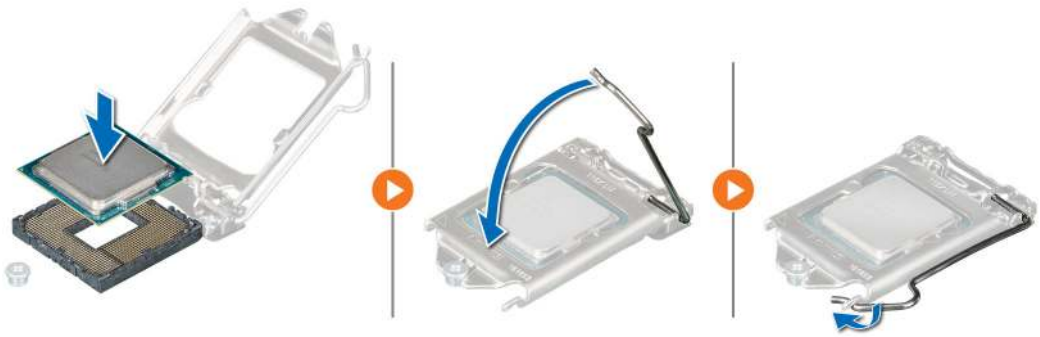

Figure 60. Installing the processor

3. If you are using an existing heat sink, remove the thermal grease from the heat sink by using a clean lint-free cloth.
4. Apply the thermal grease in a thin spiral design on top of the processor.

   CAUTION: Applying too much thermal grease can result in excess grease coming in contact with and contaminating the processor socket.

   NOTE: The thermal grease syringe is intended for single use only. Dispose the syringe after you use it.

Figure 61. Applying thermal grease

NOTE: Ensure that you install the heat sink after you install the processor. The heat sink is necessary to maintain proper thermal conditions.

Next steps

1. Install the heatsink.
2. Install the air shroud.
3. Follow the procedure listed in After working inside your system.

Installing the processor and heat sink module

Prerequisites

Never remove the heat sink from a processor unless you intend to replace the processor or heat sink. The heat sink is necessary to maintain proper thermal conditions.

1. Follow the safety guidelines listed in the Safety instructions.
2. Follow the procedure listed in Before working inside your system.
3. Remove the air shroud.

Steps

1. If you are using an existing heat sink, remove the thermal grease from the heat sink by using a clean lint-free cloth.
2. Apply thermal grease in a quadrilateral design on the top of the processor.

   CAUTION: Applying too much thermal grease can result in excess grease coming in contact with and contaminating the processor socket.

   NOTE: The thermal grease syringe is intended for single use only. Dispose the syringe after you use it.

Figure 62. Applying thermal grease

3. Align the cut-off on the heat sink to the triangle system board, and then place the heat sink module on the processor socket.

   CAUTION: To avoid damaging the fins on the heat sink, do not press down on the heat sink fins.

   NOTE: Ensure that the heatsink is held parallel to the system board to prevent damaging the components.

4. Using a screwdriver, tighten the screws in the following order to secure the heat sink to the system board.
   a. Tighten the first screw three turns.
   b. Tighten the rest of the screws in the order numbered.
5. Return to the first screw to tighten it.

   NOTE: The numbers on the image do not depict the exact steps. The numbers are for representation of sequence.

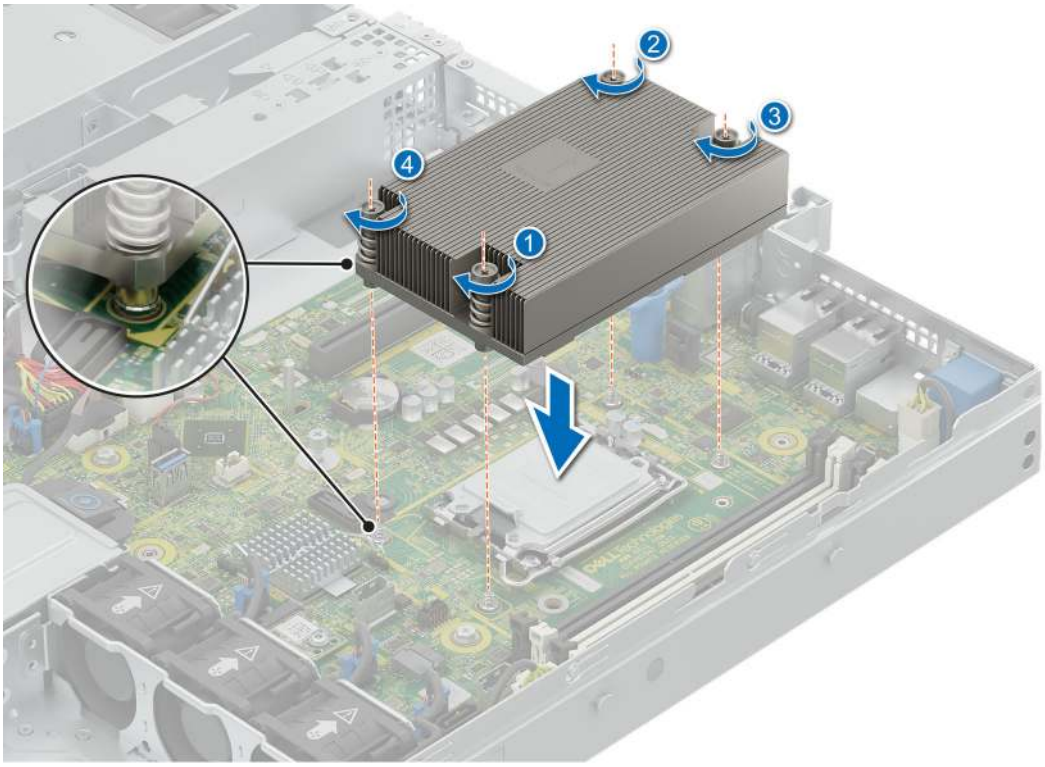

Figure 63. Installing the heat sink

Next steps

1. Install the air shroud.
2. Follow the procedure listed in After working inside your system.

Expansion cards and expansion card risers

NOTE: A System Event Log (SEL) event is logged if an expansion card riser is not supported or missing. It does not prevent your system from turning on. However, if a F1/F2 pause occurs with an error message, see *Troubleshooting expansion cards* section in the *Delll PowerEdge Servers Troubleshooting Guide* at PowerEdge manuals.

Expansion card installation guidelines

The following table provides guidelines for installing expansion cards to ensure proper cooling and mechanical fit. The expansion cards with the highest priority should be installed first using the slot priority indicated. All the other expansion cards should be installed in the card priority and slot priority order.

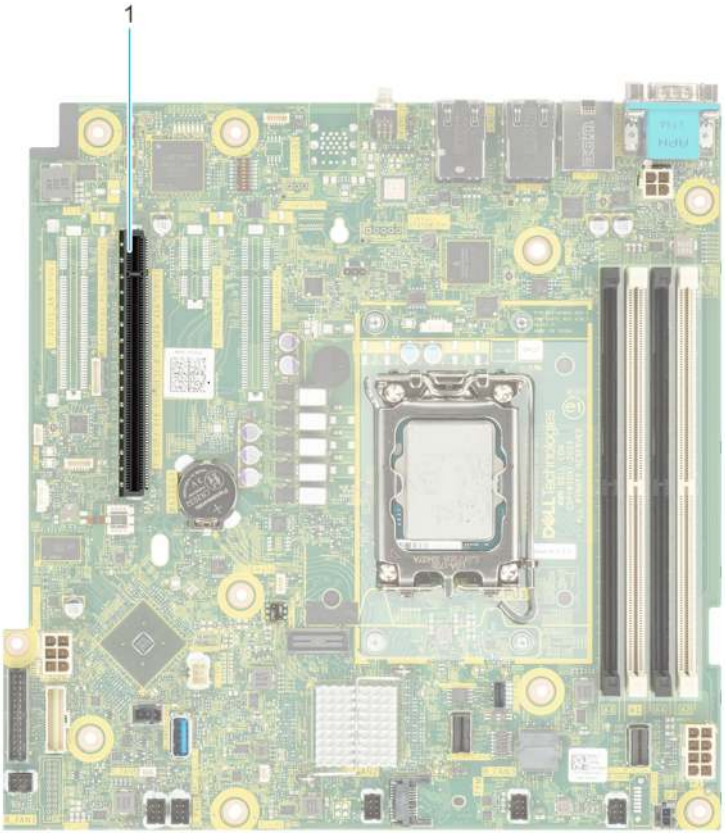

Figure 64. Expansion card riser slot connectors

1. Butterfly Riser connector

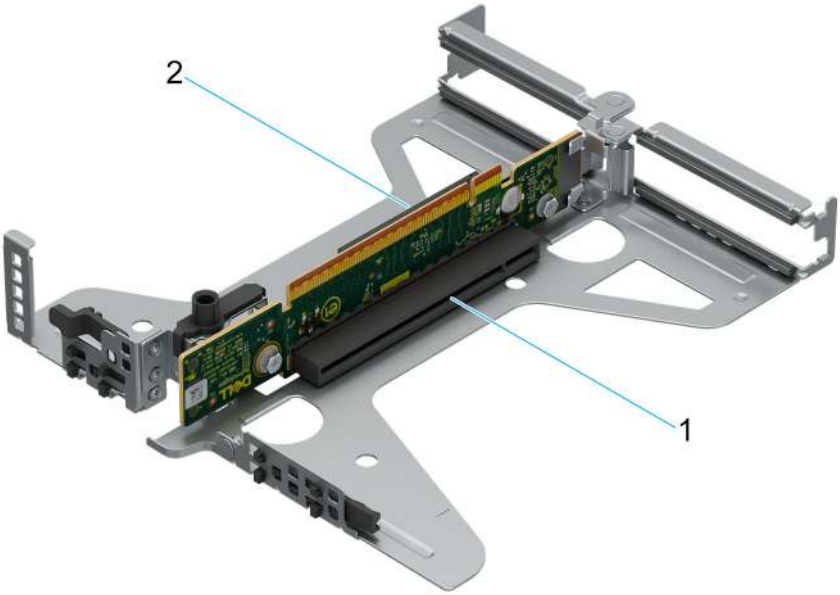

Figure 65. Butterfly riser

1. PCIe Slot 2
2. PCIe Slot 1

Table 76. Expansion card riser configurations

Configurations	Expansion card risers	PCIe Slot number	Form factor	Controlling processor	Slot's electrical bandwidth/ physical connector
Config 0	No Riser	Integrated slot	BOSS-N1	Processor 1	PCIe Gen3 x4
Config 1	Butterfly Riser	1	Low Profile	Processor 1	PCIe Gen4 x8 (x8 connector)
		2	Low Profile	Processor 1	PCIe Gen4 x8 (x16 connector)

Table 77. Riser configurations: System without riser - Configuration 0 SAS/SATA

Card type	Slot Priority	Maximum number of cards
FOXCONN (BOSS-N1)	Integrated slot	1
FOXCONN (BOSS-N1)	Integrated slot	1

Table 78. Riser configurations: System with butterfly riser : Configuration 1

Card type	Slot Priority	Maximum number of cards
FOXCONN (aPERC 11)	2	1
FOXCONN (aPERC HBA11)	2	1
FOXCONN (External Adapter)	2,1	2
FOXCONN (aPERC 11)	2	1
Broadcom (NIC:1Gb)	1,2	2
Intel (NIC:10Gb)	1,2	2
Intel (NIC:10Gb)	1,2	2
Broadcom (NIC:10Gb)	1,2	2
Broadcom (NIC:10Gb)	1,2	2
Intel (NIC:1Gb)	1,2	2
FOXCONN (BOSS-N1)	Integrated slot	1
FOXCONN (BOSS-N1)	Integrated slot	1
FOXCONN (External Adapter)	2,1	2

Removing an expansion card riser

Prerequisites

1. Follow the safety guidelines listed in Safety instructions.
2. Follow the procedure listed in Before working on your system.
3. Remove the air shroud.
4. Disconnect any cables that are connected to the expansion card.

Steps

Hold the butterfly riser by the blue touch points and lift it from the system.

NOTE: The numbers on the image do not depict the exact steps. The numbers are for representation of sequence.

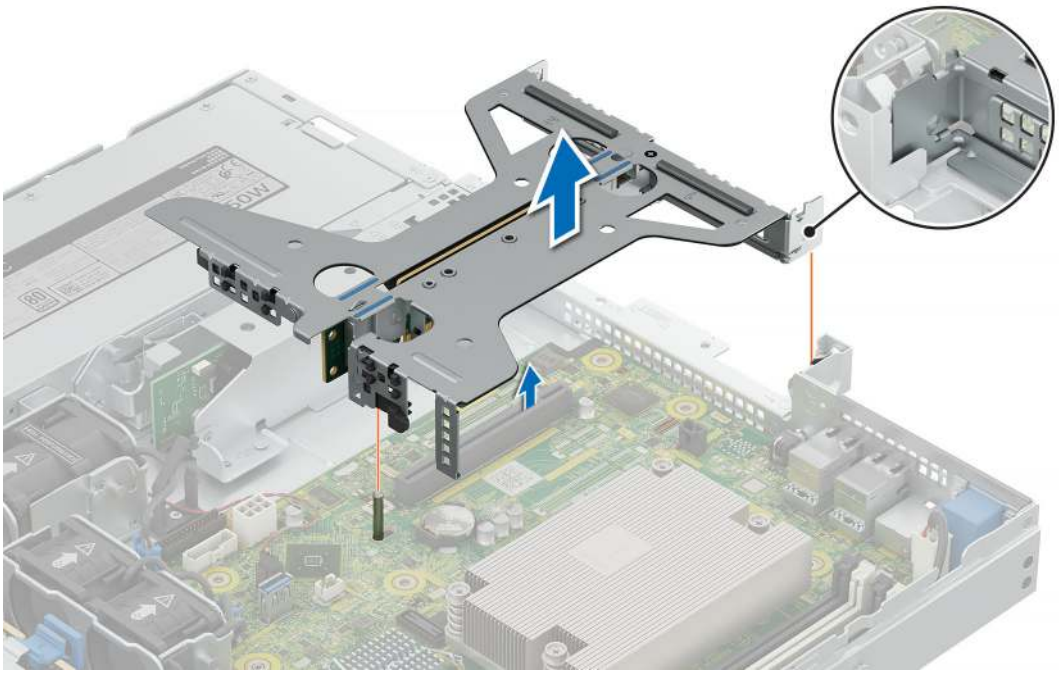

Figure 66. Removing the riser

Next steps

Install the expansion card riser.

Removing an expansion card from the riser

Prerequisites

1. Follow the safety guidelines listed in Safety instructions.
2. Follow the procedure listed in Before working on your system.
3. Remove the air shroud.
4. Remove the expansion card riser.
5. Disconnect any cables that are connected to the expansion card.

Steps

Hold the expansion card by the edges and pull it to disengage from the connector .

NOTE: The numbers on the image do not depict the exact steps. The numbers are for representation of sequence.

Figure 67. Removing an expansion card from the riser

Next steps

Install the expansion card into the riser.

Installing the expansion card in to the expansion card riser

Prerequisites

1. Follow the safety guidelines listed in Safety instructions.
2. Follow the procedure listed in Before working on your system.
3. Disconnect the system from the electrical outlet, and disconnect the peripherals.
4. Remove expansion card riser.

Steps

1. If installed, remove the filler bracket.

   NOTE: Store the filler bracket for future use. Filler brackets must be installed in empty expansion card slots to maintain Federal Communications Commission (FCC) certification of the system. The brackets also keep dust and dirt out of the system and aid in proper cooling and airflow inside the system.

   NOTE: The numbers on the image do not depict the exact steps. The numbers are for representation of sequence.

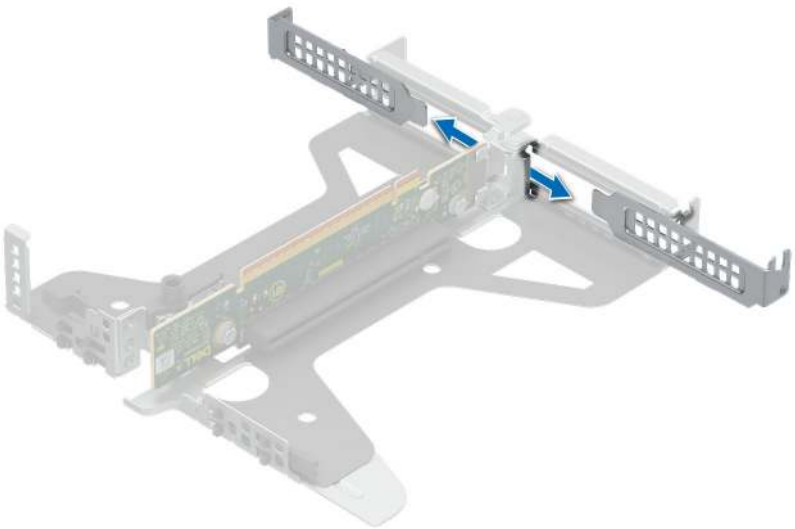

Figure 68. Removing filler bracket from the riser

2. To Install an expansion card into the riser.
   a. Align the left slider with the right grove.
   b. Insert the card edge connector firmly into the expansion card connector until the card is fully seated.

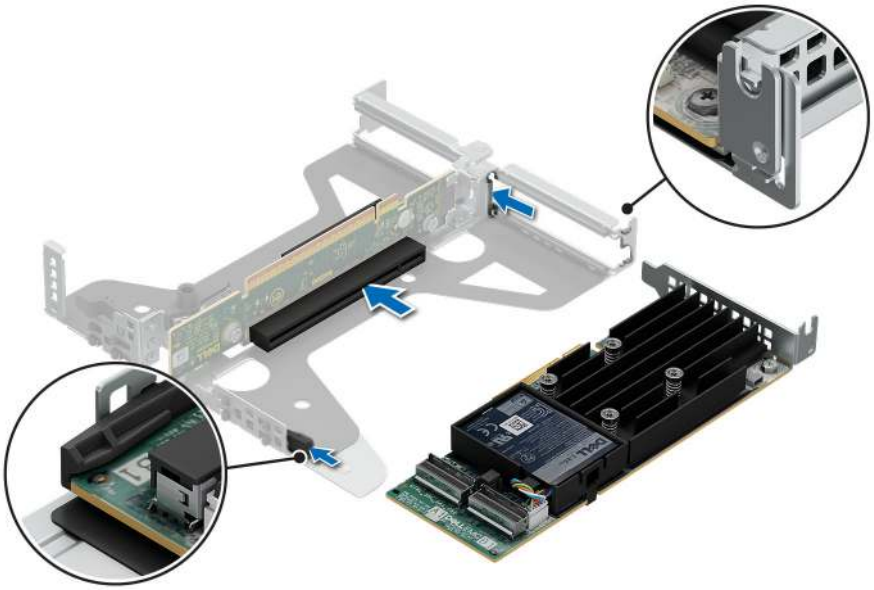

Figure 69. Installing expansion card into the riser

Next steps

1. Install expansion card riser
2. If applicable, connect the cables to the expansion card.
3. Install air shroud.
4. Follow the procedure listed in After working inside your system.

Installing an expansion card riser

Prerequisites

1. Follow the safety guidelines listed in Safety instructions.
2. Follow the procedure listed in Before working on your system.
3. Remove the air shroud.

Steps

1. Hold the riser by the blue touch points and align it to the connector and the guide pin on the system.
2. Lower the riser into place till its firmly seated on the connector.

NOTE: The numbers on the image do not depict the exact steps. The numbers are for representation of sequence.

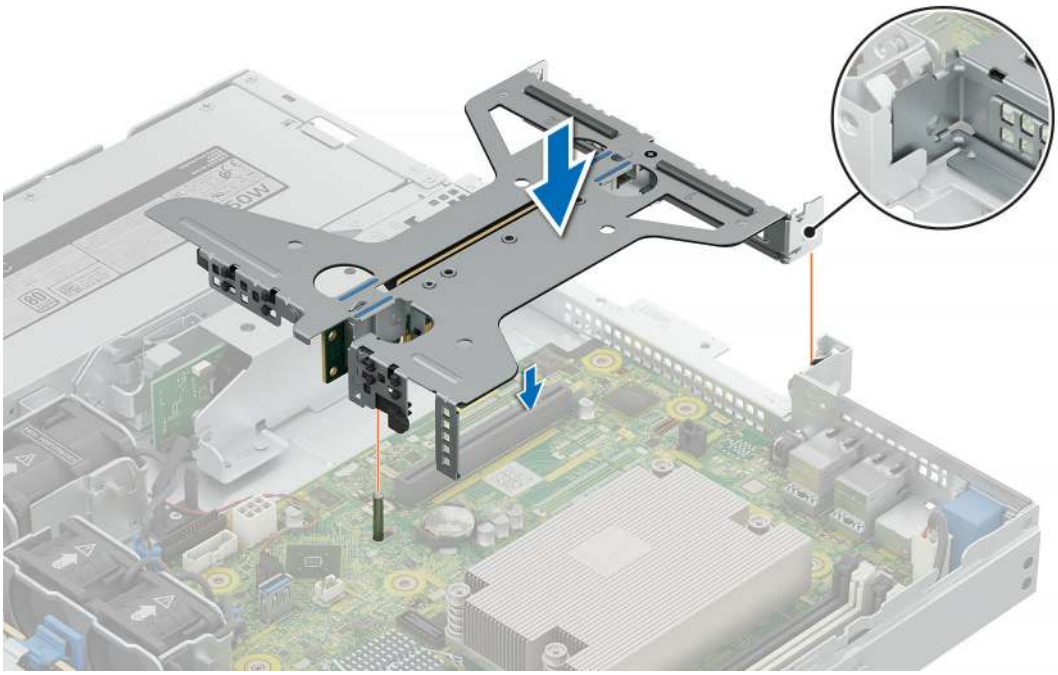

Figure 70. Installing the riser

CAUTION: While installing the expansion card riser assembly, ensure the component or pins are aligned with the slot on the system board. Press down on the contact area and gently vertically insert it straight down to avoid damages to the pins or slot.

Next steps

1. Install the air shroud.
2. Follow the procedure listed in After working inside your system.

Optional BOSS-N1 module

Removing the BOSS N1 blank

Prerequisites

1. Follow the safety guidelines listed in Safety instructions.
2. Follow the procedure listed in Before working on your system.
3. Remove system cover.

4. Remove air shroud.

Steps

Pull the N1 BOSS blank out of the system to remove it.

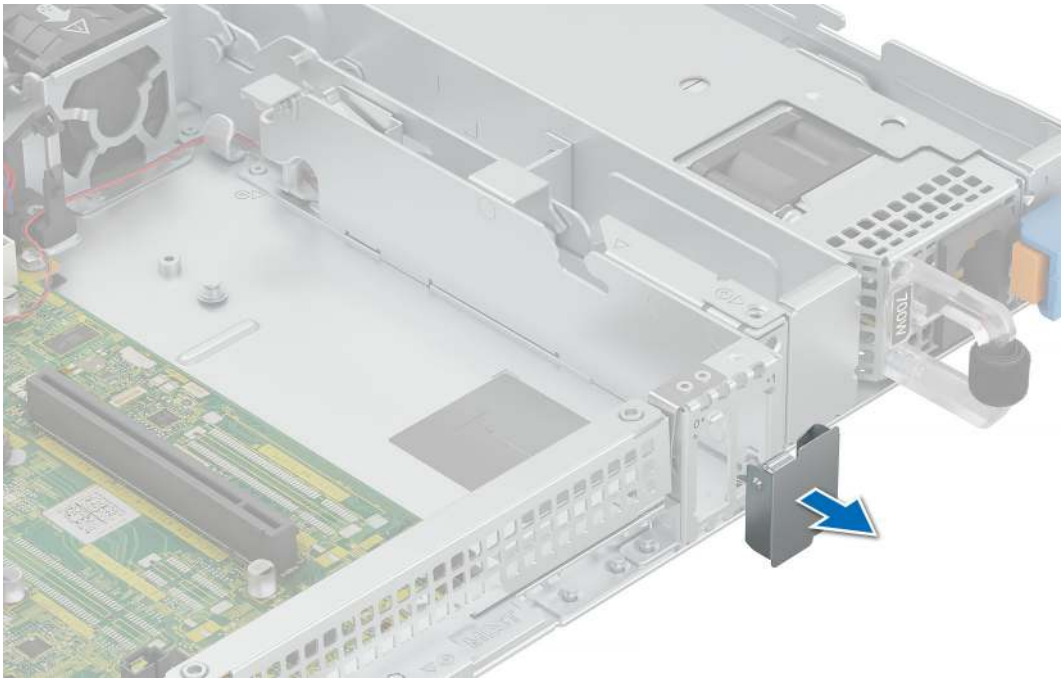

Figure 71. Removing the BOSS N1 blank

Next steps

1. Install the BOSS N1 blank or Install the BOSS N1 module.

Installing the BOSS N1 blank

Prerequisites

1. Follow the safety guidelines listed in Safety instructions.
2. Follow the procedure listed in Before working on your system.

Steps

Insert the BOSS N1 blank in to the system till it clicks in place.

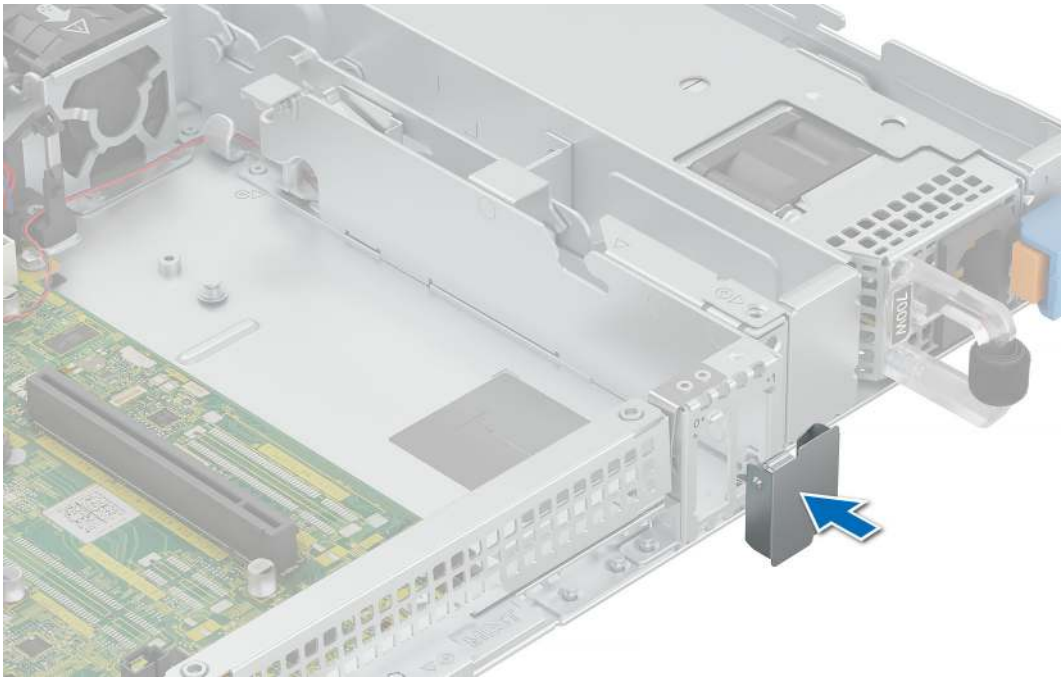

Figure 72. Installing the BOSS N1 blank

Next steps

1. Follow the procedure listed in After working inside your system.

Removing the BOSS-N1 module

Prerequisites

1. Follow the safety guidelines listed in Safety instructions.
2. Follow the procedure listed in Before working on your system.
3. Remove the air shroud.

Steps

1. Disconnect the cables from the BOSS-N1 module.
2. Lift the retention latch to unlock the BOSS-N1 M.2 module.
3. Pull the BOSS-N1 M.2 module out from the rear of the system.

NOTE: The numbers on the image do not depict the exact steps. The numbers are for representation of sequence.

Figure 73. Removing the BOSS-N1 M.2 module

4. Loosen and remove the single screw securing the BOSS N1 cage t the chassis floor.
5. Slide the BOSS-N1 cage to the unlock position and lift from the system to remove.

   NOTE: The numbers on the image do not depict the exact steps. The numbers are for representation of sequence.

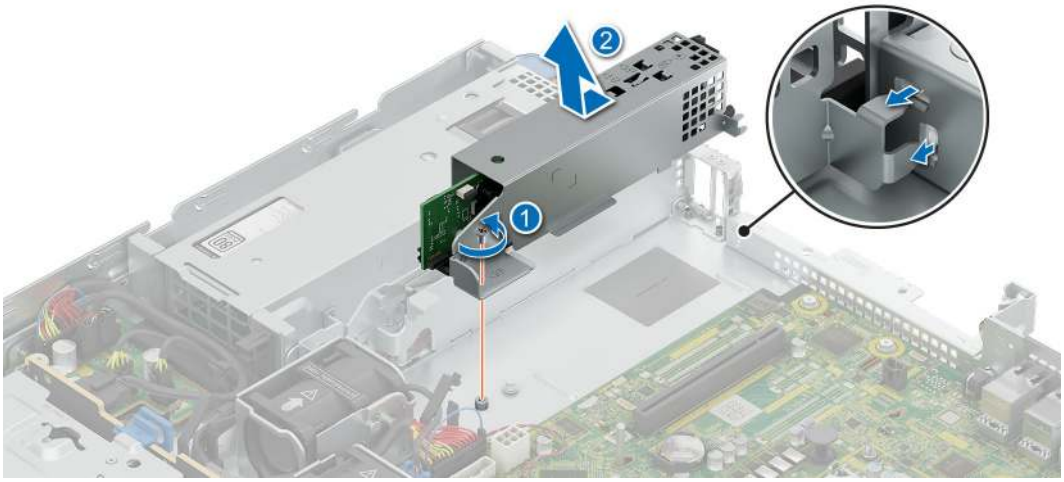

Figure 74. Removing the BOSS-N1 cage

6. Loosen and remove the two screws securing the BOSS-N1 card to the cage.
7. Pull the BOSS-N1 card out from the cage.

   NOTE: The numbers on the image do not depict the exact steps. The numbers are for representation of sequence.

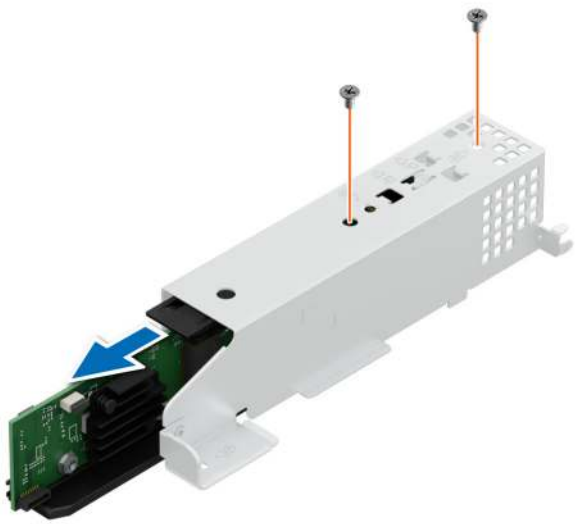

Figure 75. Removing the BOSS-N1 card

8. Loosen and remove the single screw and slide the M.2 NVMe SSD out from the BOSS-N1 carrier.

   NOTE: The numbers on the image do not depict the exact steps. The numbers are for representation of sequence.

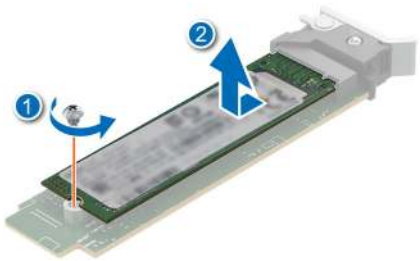

Figure 76. Removing the M.2 SSD

Next steps

1. Install the BOSS-N1 module or Install the BOSS-N1 blank.

Installing the BOSS-N1 module

Prerequisites

1. Follow the safety guidelines listed in the Safety instructions.
2. Follow the procedure listed in Before working inside your system.
3. Remove the air shroud.
4. Remove the BOSS-N1 blank(if installed).

Steps

1. Insert the BOSS-N1 card in to the cage.

2. Tighten the two screws to secure the BOSS-N1 card to the cage.

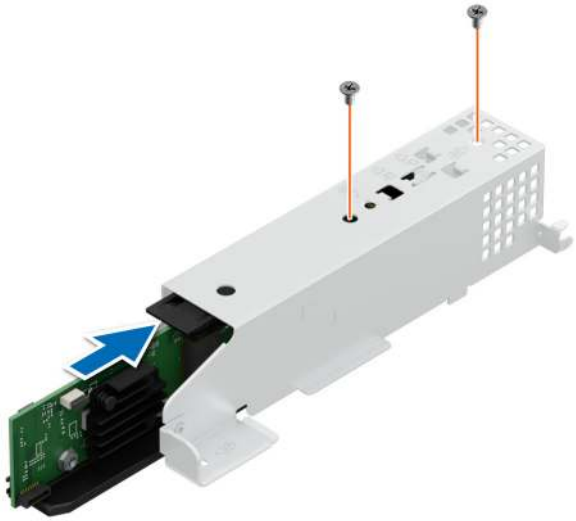

Figure 77. Installing the BOSS-N1 card

3. Align the BOSS-N1 cage guide pins and slide the module to insert it in the rear wall.
4. Tighten the screw to secure the BOSS-N1 cage to the chassis.
5. Connect the cables to the BOSS-N1 module.

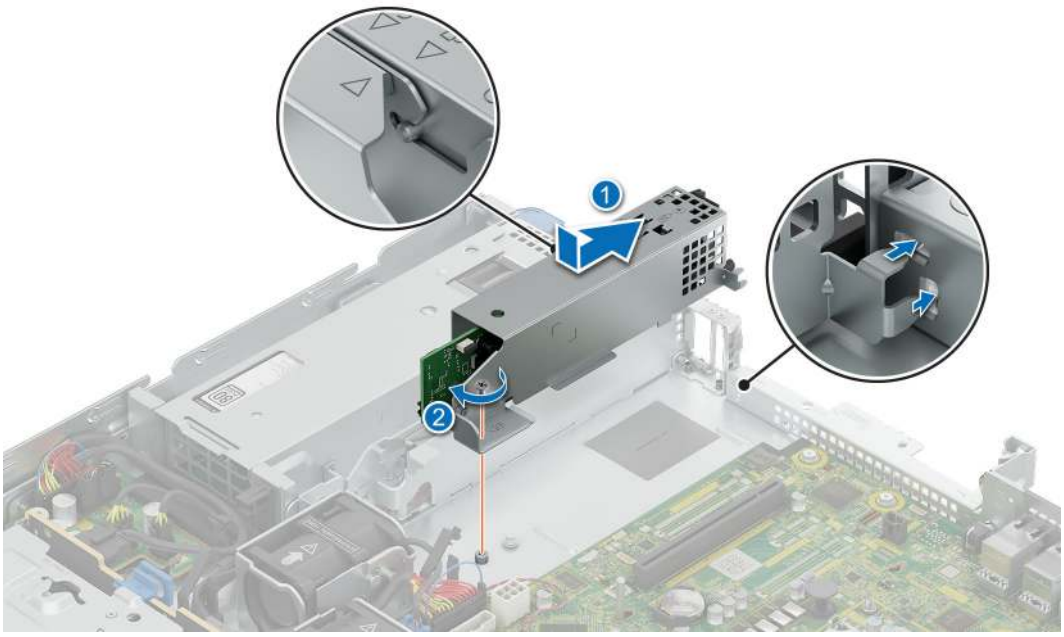

Figure 78. Installing the BOSS-N1 cage

6. Insert the M.2 NVMe SDD at an angle till it is firmly seated and tighten the screw to secure it in place.

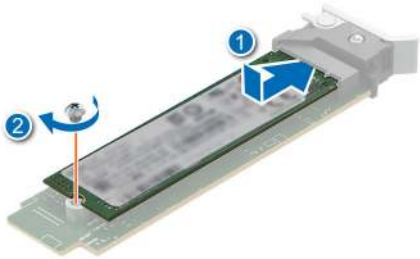

Figure 79. Installing the M.2 SSD

7. Slide the BOSS-N1 M.2 carrier in to the slot.
8. Close the latch to secure the BOSS-N1 M.2 carrier .

Figure 80. Installing the BOSS-N1 M.2 module

Next steps

1. Install the air shroud.
2. Follow the procedure listed in After working inside your system.

System battery

This is a service technician replaceable part only.

Replacing the system battery

Prerequisites

WARNING: There is a danger of a new battery exploding if it is incorrectly installed. Replace the battery only with the same or equivalent type that is recommended by the manufacturer. For more information, see the safety information that shipped with your system.

1. Follow the safety guidelines listed in Safety instructions.
2. Follow the procedure listed in Before working on your system.
3. Remove the air shroud.
4. Remove the expansion card riser (if installed).

Steps

1. Press and hold the battery socket retention latch, for the battery to pop out. .

   CAUTION: To avoid damage to the battery connector, you must firmly support the connector while installing or removing a battery.

   NOTE: If the battery does not pop out, then lift it out of the socket.

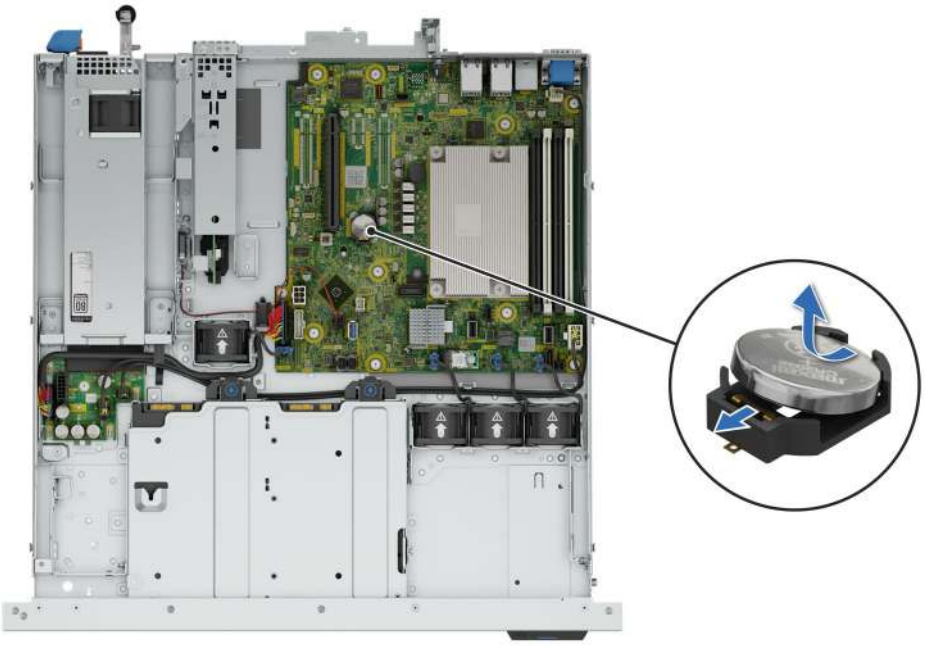

Figure 81. Removing the system battery

2. To install a new system battery, hold the battery with the positive side facing up and slide it under the socket battery latch.
3. Press the battery into the connector until it snaps into place.

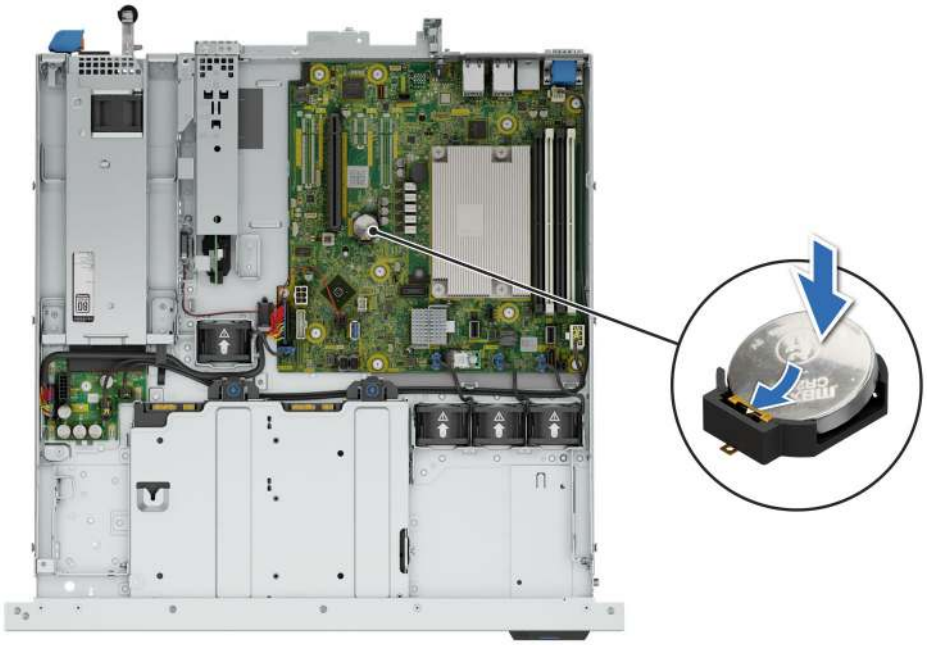

Figure 82. Installing the system battery

Next steps

1. Install the expansion card riser(if removed).
2. Install the air shroud.
3. Follow the procedure listed in After working inside your system.

PERC card

Your system includes dedicated slots on the system board for PERC cards.

Removing the internal PERC card

Prerequisites

1. Follow the safety guidelines listed in Safety instructions.
2. Follow the procedure listed in Before working on your system.
3. Remove the air shroud.
4. Remove the expansion card riser.

Steps

1. Disconnect the cables that are connected to the PERC card.
2. Hold the expansion card by the edges and pull it to disengage from the connector.

   NOTE: The numbers on the image do not depict the exact steps. The numbers are for representation of sequence.

Figure 83. Removing the PERC card

Next steps

1. Install the PERC card.

Installing the internal PERC card

Prerequisites

1. Follow the safety guidelines listed in Safety instructions.
2. Follow the procedure listed in Before working on your system.
3. Remove air shroud.
4. Remove the expansion card riser.

Steps

1. Align the left slider with the right positioning groove.
2. Slide the PERC card into the slot till its firmly seated.

NOTE: The numbers on the image do not depict the exact steps. The numbers are for representation of sequence.

Figure 84. Installing the internal PERC card

Next steps

1. Install the expansion card riser.
2. Install the air shroud.
3. Follow the procedure listed in After working inside your system.

Power supply units

Removing a cabled power supply unit (PSU)

Prerequisites

CAUTION: The system needs one power supply unit (PSU) for normal operation. On power-redundant systems, remove and replace only one PSU at a time in a system that is powered on.

The PowerEdge R260 support only one cabled or one non cabled PSU.

1. Follow the safety guidelines listed in Safety instructions.
2. Follow the procedure listed in Before working on your system.
3. Disconnect the power cable from the power outlet and from the PSU that you intend to remove.
4. Unlatch and lift or remove the optional cable management accessory if it interferes with the PSU removal.

NOTE: For information about the cable management when the PSU is removed or installed while the system is in a rack, see the system's cable management arm documentation at PowerEdge Manuals.

Steps

1. Disconnect the PSU cables from the system board.
2. Loosen and remove the single screw securing the PSU.
3. Lift up the PSU and remove it from the system.

Figure 85. Removing a cabled power supply unit

NOTE: Make note of the cable routing and ensure the same is followed while installing the PSU.

Next steps

1. Install the cabled PSU.
2. Follow the procedure listed in After working inside your system.

.

Installing a cabled power supply unit (PSU)

The procedure for installing AC and DC PSUs is identical.

Prerequisites

1. Ensure that both the PSUs are of the same type and have the same maximum output power.

   NOTE: The maximum output power (shown in watts) is listed on the PSU label.

2. Follow the safety guidelines listed in Safety instructions.
3. Follow the procedure listed in Before working on your system.

Steps

1. Place the PSU at an angle and align the guide feature.
2. Replace and tighten the single screw to secure the PSU into the chassis.

Figure 86. Installing a cabled power supply unit (PSU)

Next steps

1. If you have unlatched or removed the cable management accessory, reinstall or relatch it. For information about the cable management when the PSU is removed or installed while the system is in the rack, see the system's cable management accessory documentation at PowerEdge manuals.
2. Connect the power cable to the PSU, and plug the cable into a power outlet.
3. Follow the procedure listed in After working inside your system.

Removing a non cabled power supply unit (PSU)

Prerequisites

CAUTION: The system needs one power supply unit (PSU) for normal operation. On power-redundant systems, remove and replace only one PSU at a time in a system that is powered on.

The PowerEddge R260 support only one cabled or one non cabled PSU.

1. Follow the safety guidelines listed in Safety instructions.
2. Follow the procedure listed in Before working on your system.
3. Disconnect the power cable from the power outlet and from the PSU that you intend to remove.
4. Remove the cable from the strap on the PSU handle.
5. Unlatch and lift or remove the optional cable management accessory if it interferes with the PSU removal.

NOTE: For information about the cable management when the PSU is removed or installed while the system is in a rack, see the system's cable management arm documentation at PowerEdge Manuals.

Steps

1. Open the PSU latch.
2. Press the orange release latch and slide the PSU out of the system by using the PSU handle.

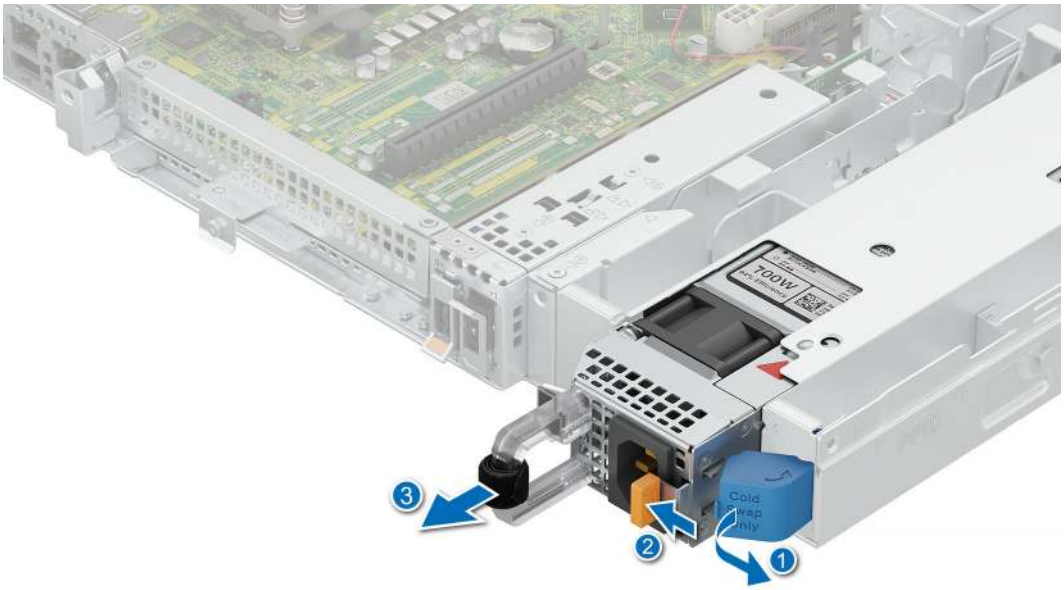

Figure 87. Removing a non cabled power supply unit

Next steps

1. Install the non cabled PSU.
2. Follow the procedure listed in After working inside your system.

.

Installing a non cabled power supply unit

The procedure for installing AC and DC PSUs is identical.

Prerequisites

1. Ensure that both the PSUs are of the same type and have the same maximum output power.

   NOTE: The maximum output power (shown in watts) is listed on the PSU label.

2. Follow the safety guidelines listed in Safety instructions.
3. Follow the procedure listed in Before working on your system.

Steps

1. Open the PSU latch.
2. Slide the PSU into the PSU bay until the PSU is fully seated and the orange release latch snaps into place.

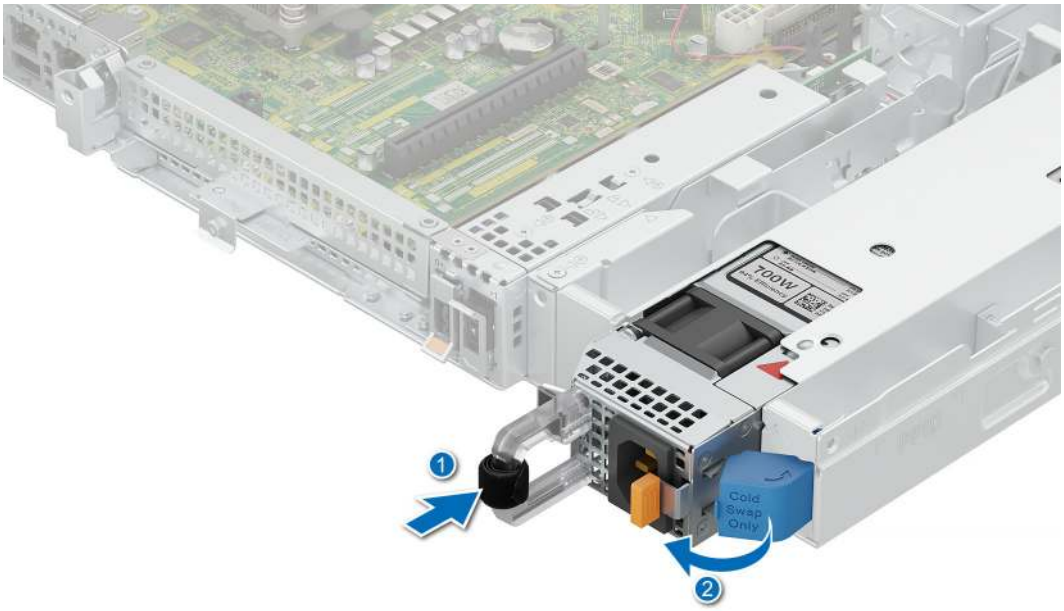

Figure 88. Installing a non cabled power supply unit

Next steps

1. If you have unlatched or removed the cable management accessory, reinstall or relatch it. For information about the cable management when the PSU is removed or installed while the system is in the rack, see the system's cable management accessory documentation at PowerEdge manuals.
2. Connect the power cable to the PSU, and plug the cable into a power outlet.

   CAUTION: When connecting the power cable to the PSU, secure the cable to the PSU with the strap provided on the handle.

3. Follow the procedure listed in After working inside your system.

Power interposer board (PIB)

Removing the PIB

Prerequisites

1. Follow the safety guidelines listed in Safety instructions.
2. Follow the procedure listed in Before working on your system.
3. Remove the air shroud.
4. Remove the power supply unit.

Steps

1. Loosen and remove the single screw securing the PIB.
2. Slide the PIB back to disengage from the four guide hooks and lift from the system .

   NOTE: The numbers on the image do not depict the exact steps. The numbers are for representation of sequence.

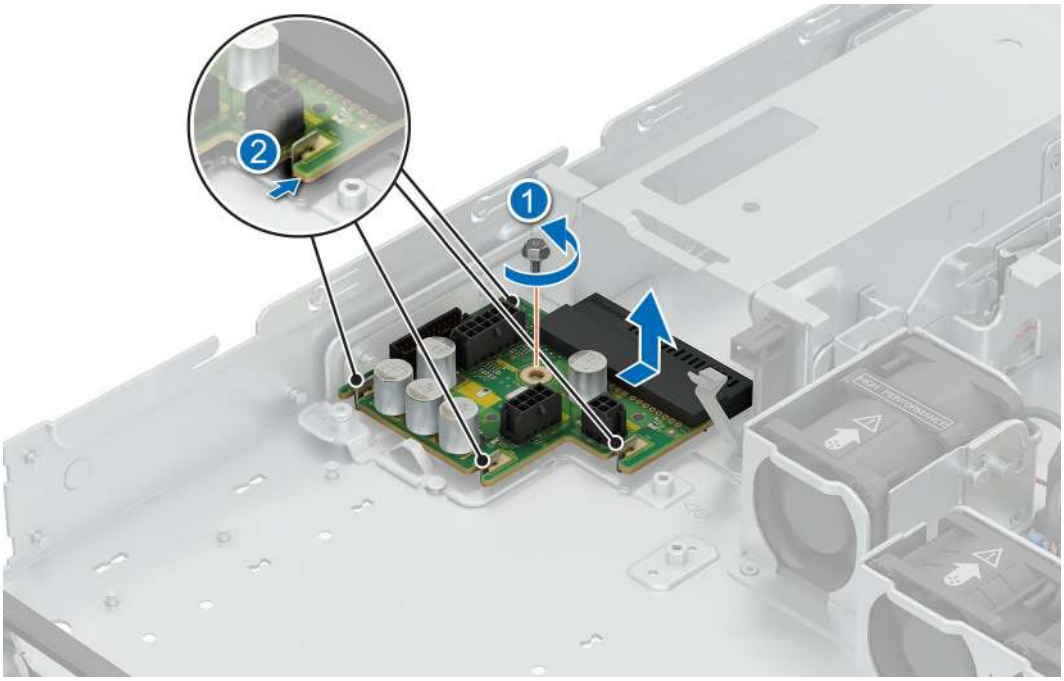

Figure 89. Removing the PIB

Next steps

Install the PIB.

Installing the PIB

Prerequisites

1. Follow the safety guidelines listed in Safety instructions.
2. Follow the procedure listed in Before working on your system.
3. Remove the air shroud.
4. Remove the power supply unit.

Steps

1. Align the PIB with the four guide hooks on the chassis floor.
2. Slide PIB in to the guide hooks till firmly seated.
3. Replace and tighten the single screw to secure the PIB in place.

   NOTE: The numbers on the image do not depict the exact steps. The numbers are for representation of sequence.

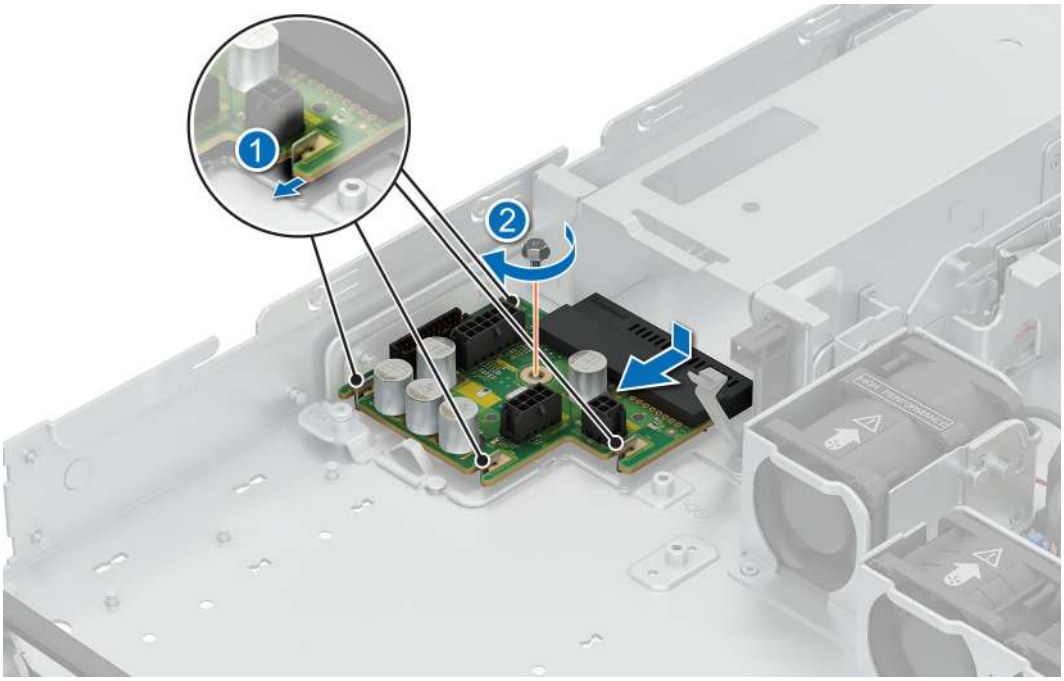

Figure 90. Installing the PIB

Next steps

1. Install the power supply unit.
2. Install the air shroud.
3. Follow the procedure listed in After working inside your system.

System board

This is a service technician replaceable part only.

Removing the system board

Prerequisites

1. Follow the safety guidelines listed in Safety instructions.
2. Follow the procedure listed in Before working on your system.
3. Remove the following:

   CAUTION: Do not lift the system board by holding a memory module, processor, or other components.

   a. Air shroud
   b. Memory modules
   c. Expansion card riser (if installed)
   d. Heat sink
   e. Processor

Steps

1. Disconnect all cables from the system board.
2. Loosen and remove the 10 screws securing the system board.
3. Hold the system board and slide it toward the front of the chassis.

4. Incline the system board at an angle, and lift the system board out of the chassis.

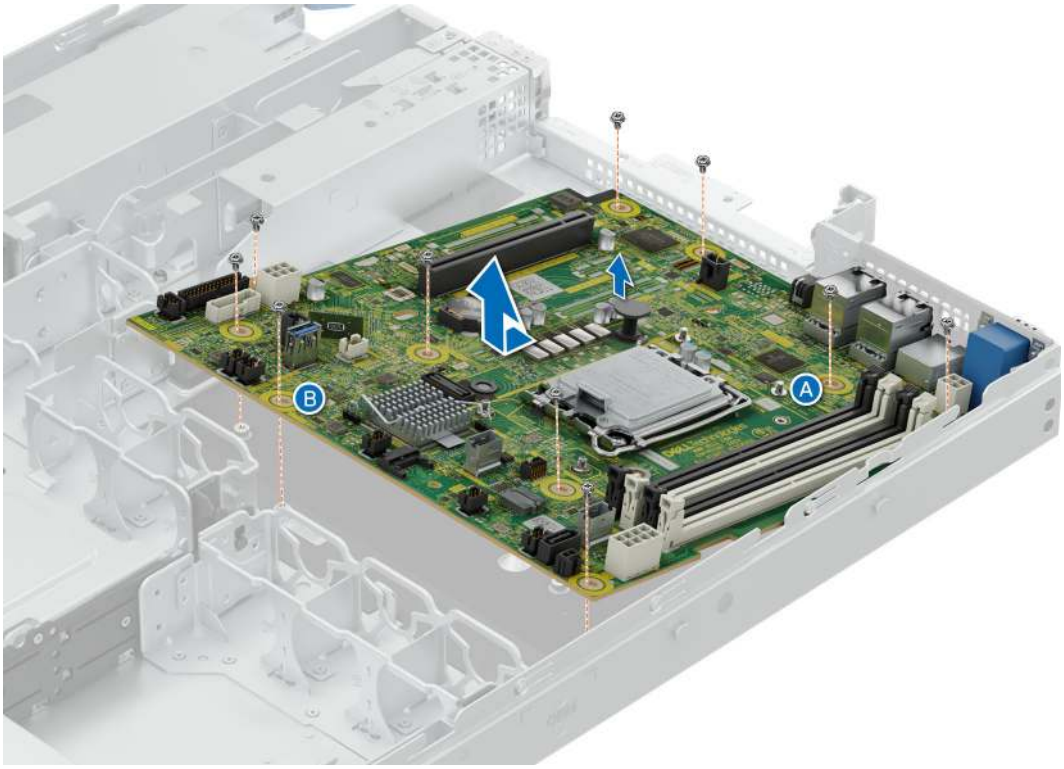

Figure 91. Removing the system board

Next steps

Install the system board.

Installing the system board

Prerequisites

1. Follow the safety guidelines listed in Safety instructions.
2. Follow the procedure listed in Before working on your system.
3. Remove the following:
   a. Air shroud
   b. Memory modules
   c. Expansion card riser (if installed)
   d. Heat sink
   e. Processor

Steps

1. Unpack the new system board.

   CAUTION: Do not lift the system board by holding a memory module, processor, or other components.

2. Align the screw holes A and B and lower the system board in to the chassis.
3. Incline the system board at an angle, align the connectors with the slots on the rear of the system and push the system board till firmly seated.
4. Install and tighten screw A followed by screw B.
5. Install and tighten the remaining eight screws to secure the system board in place,

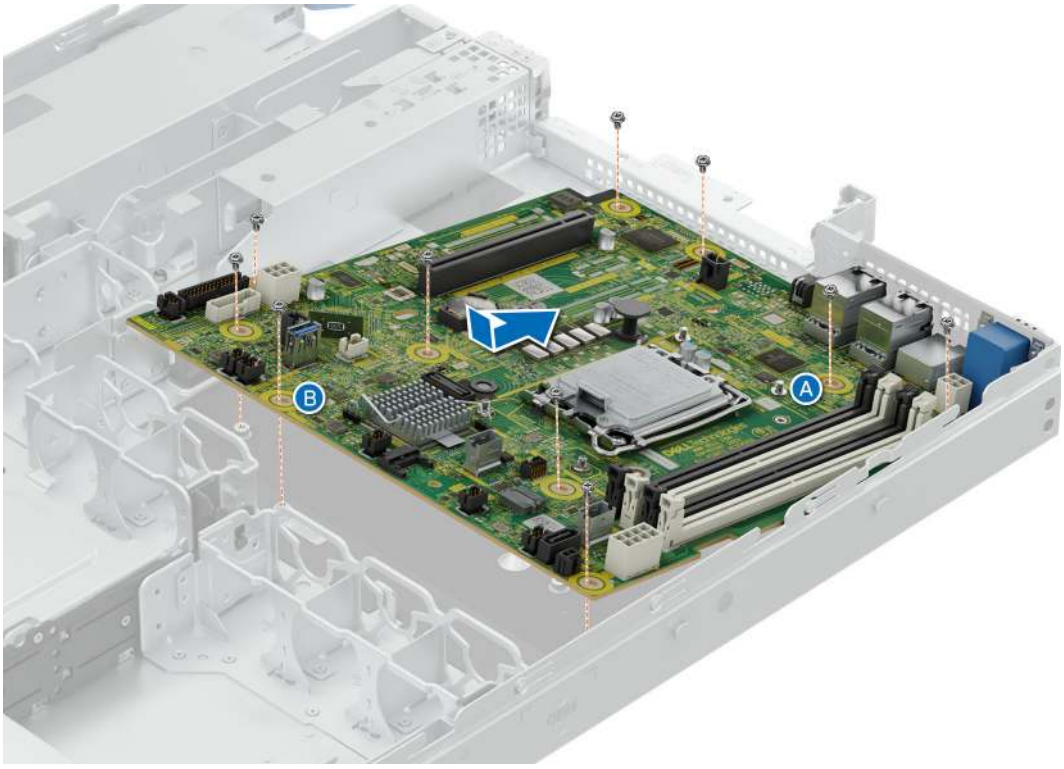

Figure 92. Installing system board

Next steps

1. Replace the following:
   a. Trusted Platform Module (TPM)
   b. Processor (if removed)
   c. Heat sink (if removed)
   d. Expansion card riser (if removed)
   e. Memory module (if installed)
2. Reconnect all cables to the system board.

   NOTE: Ensure that the cables inside the system are routed along the chassis wall and secured using the cable securing bracket.

3. Install the air shroud.
4. Install the system cover.
5. Ensure that you perform the following steps:
   a. Use the Easy Restore feature to restore the Service Tag. See the Restoring the system by using the Easy Restore feature section.
   b. If the service tag is not backed up in the backup flash device, enter the system service tag manually. See the Manually update the Service Tag by using System Setup section.
   c. Install BIOS and iDRAC version updates, Diagnostics, and OS Driver Pack and OS Collector.
   d. Re-enable the Trusted Platform Module (TPM). See the Upgrading the Trusted Platform Module section.
6. Follow the procedure listed in After working inside your system.

Restoring the system using Easy Restore

The Easy Restore feature enables you to restore your service tag, license, UEFI configuration, and the system configuration data after replacing the system board. All data is backed up in a backup flash device automatically. If BIOS detects a new system board, and the service tag in the backup flash device, BIOS prompts the user to restore the backup information.

About this task

Below is a list of options/steps available:

Steps

1. Restore the service tag, license, and diagnostics information, press **Y**
2. Navigate to the Lifecycle Controller based restore options, press **N**
3. Restore data from a previously created **Hardware Server Profile**, press **F10**

   NOTE: When the restore process is complete, BIOS prompts to restore the system configuration data.

4. Restore data from a previously created **Hardware Server Profile**, press **F10**
5. To restore the system configuration data, press **Y**
6. To use the default configuration settings, press **N**

   NOTE: After the restore process is complete, system reboots.

Manually update the Service Tag

After replacing a system board, if Easy Restore fails, follow this process to manually enter the Service Tag, using **System Setup**.

About this task

If you know the system service tag, use the **System Setup** menu to enter the service tag.

Steps

1. Power on the system.
2. To enter the **System Setup**, press **F2**.
3. Click **Service Tag Settings**.
4. Enter the service tag.

   NOTE: You can enter the service tag only when the **Service Tag** field is empty. Ensure that you enter the correct service tag. Once the service tag is entered, it cannot be updated or changed. Incorrectly entered service tag will lead to system board replacement.

5. Click **OK**.

Trusted Platform Module

This is a service technician replaceable part only.

Upgrading the Trusted Platform Module

Removing the TPM

Prerequisites

1. Follow the safety guidelines listed in the Safety instructions.
2. Follow the procedure listed in Before working inside your system.

NOTE:

- Ensure the operating system is compatible with the TPM version you are installing.
- Ensure that you download and install the latest BIOS firmware on your system.
- Ensure that the BIOS is configured to enable UEFI boot mode.

CAUTION: The TPM plug-in module is cryptographically bound to that particular system board after it is installed. When the system is powered on, any attempt to remove an installed TPM plug-in module breaks the cryptographic binding, and the removed TPM cannot be installed on another system board. Ensure any keys you have stored on the TPM have been securely transferred.

Steps

1. Locate the TPM connector on the system board. For more information, see system board connectors.
2. Press to hold the module down and remove the screw using the security Torx 8-bit shipped with the TPM module.
3. Slide the TPM module out from its connector.
4. Push the plastic rivet away from the TPM connector and rotate it 90° counterclockwise to release it from the system board.
5. Pull the plastic rivet out of its slot on the system board.

Installing the TPM

Prerequisites

1. Follow the safety guidelines listed in the Safety instructions.
2. Follow the procedure listed in Before working inside your system.

Steps

1. To install the TPM, align the edge connectors on the TPM with the slot on the TPM connector.
2. Insert the TPM into the TPM connector such that the plastic rivet aligns with the slot on the system board.
3. Press the plastic rivet until the rivet snaps into place.
4. Replace the screw that secures the TPM to the system board.

Figure 93. Installing the TPM

Initializing TPM for users

Steps

1. Initialize the TPM.
2. The **TPM Status** changes to **Enabled, Activated**.

Initializing the TPM 2.0 for users

Steps

1. While booting your system, press F2 to enter System Setup.
2. On the **System Setup Main Menu** screen, click **System BIOS** > **System Security Settings**.
3. From the **TPM Security** option, select **On**.

4. Save the settings.
5. Restart your system.

Control panel

This is a service technician replaceable part only.

Removing the right control panel

Prerequisites

1. Follow the safety guidelines listed in Safety instructions.
2. Follow the procedure listed in Before working on your system.
3. Remove the air shroud.

Steps

1. Disconnect the right control panel cable on the system board.

   NOTE: Observe the routing of the cable assembly as you remove the right control panel from the system.

2. Using the screwdriver, loosen and remove the two screws that secure the right control panel to the system.
3. Holding the right control panel and cable assembly, slide the right control panel out of the system.

   NOTE: The numbers on the image do not depict the exact steps. The numbers are for representation of sequence.

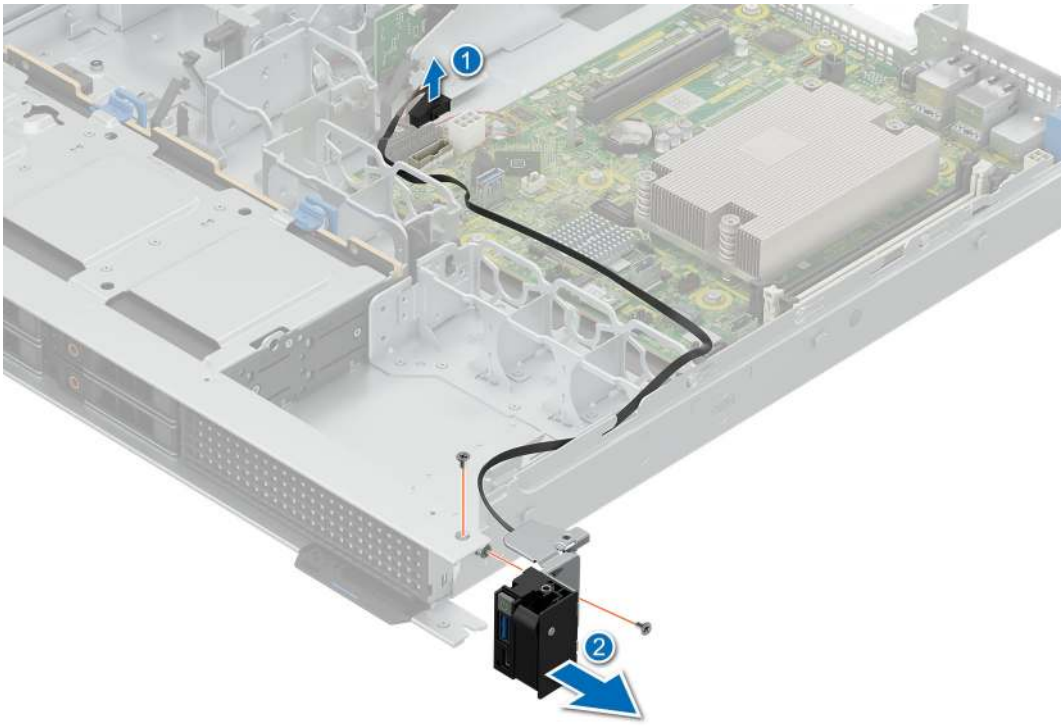

Figure 94. Removing the right control panel

Next steps

1. Install the right control panel.

Installing the right control panel

Prerequisites

1. Follow the safety guidelines listed in Safety instructions.
2. Follow the procedure listed in Before working on your system.
3. Remove the air shroud.

Steps

1. Align and slide the right control panel into the slot on the system.
2. Route the right control panel cable through the side wall of the system.

   NOTE: Route the cable properly to prevent the cable from being pinched or crimped.

3. Connect the right control panel cable to the connector on the system board.
4. Using the screwdriver, replace and tighten the two screws that secure the right control panel to the system.

   NOTE: The numbers on the image do not depict the exact steps. The numbers are for representation of sequence.

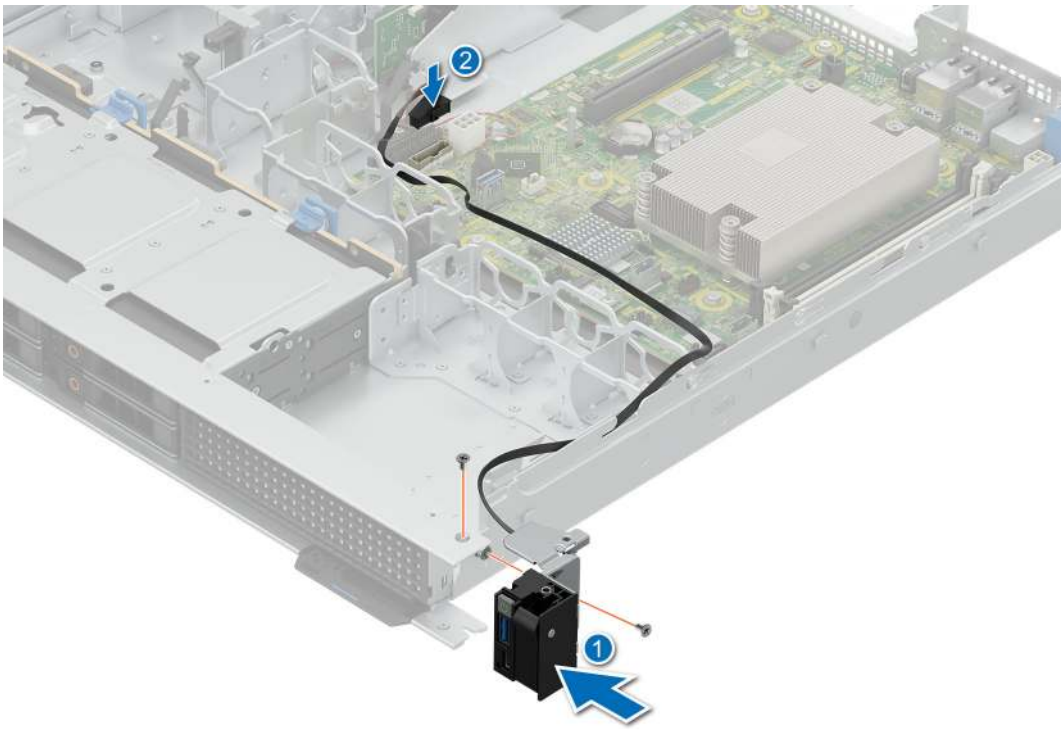

Figure 95. Installing the right control panel

Next steps

1. Install the air shroud .
2. Follow the procedure listed in After working inside your system.

Removing the left control panel

Prerequisites

1. Follow the safety guidelines listed in Safety instructions.
2. Follow the procedure listed in Before working on your system.
3. Remove the air shroud.

Steps

1. Disconnect the control panel cable from the connector on the system board.
2. Using the screwdriver, loosen and remove the three screws that secure the left control panel the system.
3. Holding the control panel , slide the left control panel out of the system.

   NOTE: Observe the routing of the cable as you remove the left control panel from the system.

   NOTE: The numbers on the image do not depict the exact steps. The numbers are for representation of sequence.

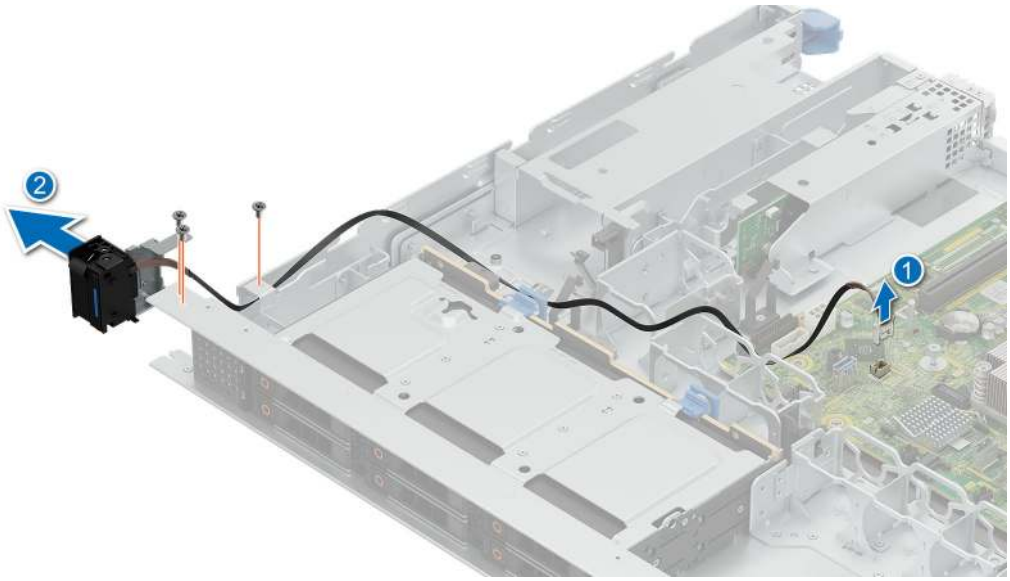

Figure 96. Removing the left control panel

Next steps

1. Install the left control panel.

Installing the left control panel

Prerequisites

1. Follow the safety guidelines listed in Safety instructions.
2. Follow the procedure listed in Before working on your system.
3. Remove the air shroud.

Steps

1. Align and slide the left control panel in the slot on the system.
2. Using the screwdriver, tighten the three screws to secure the left control panel to the system.
3. Route the left control panel cable through the side wall of the system.

   NOTE: Route the cable properly to prevent the cable from being pinched or crimped.

4. Connect the left control panel cable to the connector on the system board .

   NOTE: The numbers on the image do not depict the exact steps. The numbers are for representation of sequence.

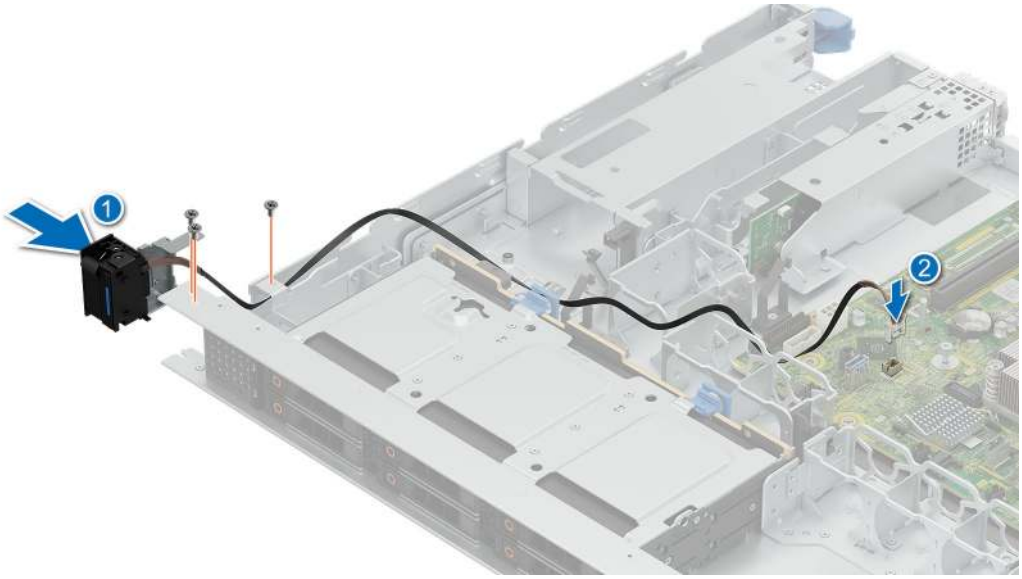

Figure 97. Installing the left control panel

Next steps

1. Install the air shroud.
2. Follow the procedure listed in After working inside your system.

9

Upgrade Kits

The table lists the available After Point Of Sale [APOS] kits.

Table 79. Upgrade kits

Kits	Related links to service instructions
Memory	See Installing a memory module
SSD	See Installing a drive
Processor	See Installing a processor
Storage controller card	See Installing the expansion car into the the expansion card riser
HBA	
Network card	
Power supplies	See Installing a power supply unit
Cables	See Cable routing
Bezel	See Installing the front bezel
Power cords	NA
BOSS-N1	See Installing the BOSS-N1 module

Topics:

- BOSS-N1 module kit
- PCIe riser kit
- Filter bezel kit

BOSS-N1 module kit

The BOSS-N1 module supports up to two M.2 NVMe SSDs.

Before you begin the installation or removal process, follow the safety guidelines and before working inside the system instructions.

Table 80. BOSS-N1 module kit components

Components in kit	R260 (quantity)
BOSS-N1 controller card module	1
BOSS-N1 card carrier	1 or 2*
M.2 NVMe SSD	1 or 2*
M.2 NVMe SSD capacity label	1 or 2†
BOSS-N1 card carrier blank	1
Cooling fan	1
M3 x 0.5 x 4.5 mm screws	2
M3 x 5.3 mm screws	1
BOSS-N1 signal cable for mother board	1

Table 80. BOSS-N1 module kit components (continued)

Components in kit	R260 (quantity)
BOSS-N1 power cable for mother board	1

NOTE: *The quantity depends on the purchase order.

NOTE: †The quantity depends on the BOSS-N1 card carrier.

1. Power off the system.
2. Remove the BOSS-N1 blank.
3. To install the BOSS-N1 module , see Install the BOSS N1 module.
4. Install the cooling fan for BOSS-N1 module.

NOTE: Refer to cable routing section for BOSS N1 cable connections.

NOTE: Installing the BOSS-N1 card carrier does not require the system to be powered off. System shutdown is only required when installing the BOSS-N1 controller card module.

PCIe riser kit

Before you begin the installation or removal process, follow the safety guidelines and before working inside the system instructions.

Table 81. PCIe riser kit components

Components in kit	R260 (quantity)
PCIe butterfly riser	1
Cooling fan	1

1. Power off the system.
2. To install the PCIe riser see, Install the expansion card riser.
3. To install a PCIe expansion card see, Install an expansion card in to the riser.
4. Install the cooling fan for PCIe riser module.

NOTE: Refer to cable routing section for PCIe expansion card cable connections.

Filter bezel kit

Prerequisites

The filter bezel kit and replacement filter media kit are available for the Customer. Depending on the kit ordered, the respective components are available.

NOTE: The filter bezel kit is available to order from June 2024.

Table 82. Components in the filter bezel kit

Components	Filter Bezel kit	
	Details	Quantity
Filter Bezel	Filter Bezel	1
Filter Media	Filter Media	1

Table 83. Components in the replacement filter media kit

Components	Filter Bezel kit	
	Details	**Quantity**
Filter Media	Filter Media	4

NOTE: To maintain optimal system health, Dell Technologies recommends checking and changing the filter media every 3-6 months. Filter media can be ordered from Dell.

Before you begin, follow the safety guidelines and before working inside the system instructions.

Steps

1. If installed, remove the security bezel and keep it safe.
2. Loosen and remove the two screws to take out the bracket from the filter bezel.
3. Insert the filter media.
4. Replace the bracket and tighten the two screws to secure it in place.
5. Insert the right side of the filter bezel in to the grove on the system.
6. Press the button on the left side of the filter bezel and install it on the system.

   NOTE: The numbers on the image do not depict the exact steps. The numbers are for representation of sequence.

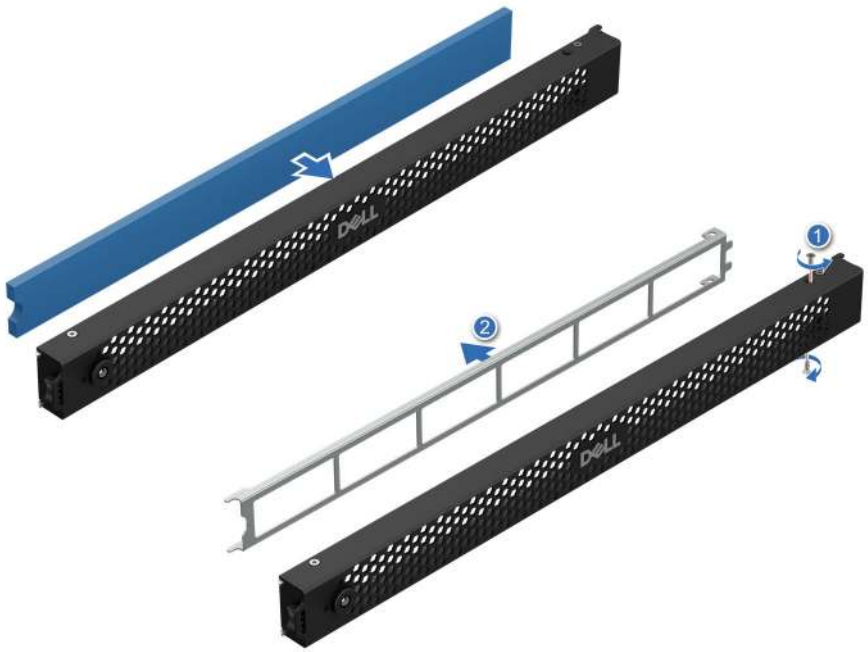

Figure 98. Installing the filter

Figure 99. Installing the filter bezel

Next steps

After installing, follow the After working inside the system instructions.

10

Jumpers and connectors

This topic provides some basic and specific information about jumpers and switches. It also describes the connectors on the various boards in the system. Jumpers on the system board help to disable the system and reset the passwords. To install components and cables correctly, you must know the connectors on the system board.

Topics:

- System board jumpers and connectors
- System board jumper settings
- Disabling a forgotten password

System board jumpers and connectors

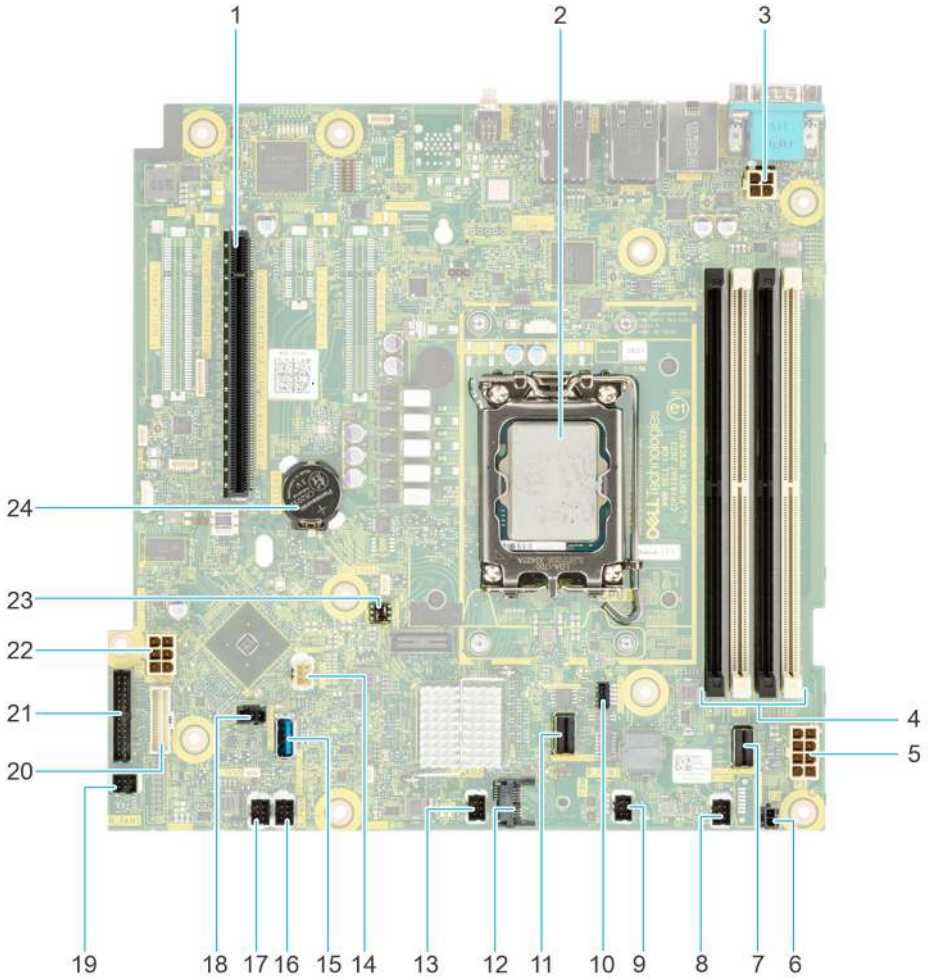

Figure 100. System board jumpers and connectors

Table 84. System board jumpers and connectors

Item	Connector	Description
1.	Riser connector	Connector for the riser

Table 84. System board jumpers and connectors (continued)

Item	Connector	Description
2.	CPU slot	Slot for CPU
3	CPU power	Power connector for CPU
4.	DIMMs	DIMM connectors
5.	Power connector	Power connector for system board
6.	PSU event signal cable	Connector for PSU event signal cable
7.	SATA connector (SL1_PCH_SA1)	SATA connector 1
8.	Fan 4	Connector for Fan 4
9.	Fan 3	Connector for Fan 3
10.	BOSS card power	Power connector for BOSS card
11.	BOSS connector (SL2_PCH_PA2)	Connector for BOSS cable
12.	TPM	TPM connector
13.	Fan 2	Connector for Fan 2
14.	Left Control Panel	Left Control Panel Connector
15.	Internal USB	USB 3.2 Gen1 port
16.	Fan 6	Connector for Fan 6
17.	Fan 5	Connector for Fan 5
18.	Intrusion switch	Intrusion switch connector
19.	Fan 1	Connector for Fan 1
20.	Right Control Panel	Right Control Panel Connector
21.	PIB connector	Connector for the PIB
22.	HDD Power	Power connector for HDD
23.	Jumper	Jumper to clear passwords
24.	Coin Cell Battery	System CMOS battery

System board jumper settings

For information about resetting the password jumper to disable a password, see the Diabling a forgotten password section.

Table 85. System board jumper settings

Jumper	Setting	Description
PWRD_EN		The BIOS password feature is enabled.
		The BIOS password feature is disabled. The BIOS password is now disabled, and you are not allowed to set a new password.
NVRAM_CLR		The BIOS configuration settings are retained at system boot.
		The BIOS configuration settings are cleared at system boot.

CAUTION: You should be cautious when changing the BIOS settings. The BIOS interface is designed for advanced users. Any changes in the setting might prevent your system from starting correctly and may even result in data loss.

Disabling a forgotten password

The software security features of the system include a system password and a setup password. The password jumper enables or disables password features and clears any password(s) currently in use.

Prerequisites

CAUTION: Many repairs may only be done by a certified service technician. You should only perform troubleshooting and simple repairs as authorized in your product documentation, or as directed by the online or telephone service and support team. Damage due to servicing that is not authorized by Dell is not covered by your warranty. Read and follow the safety instructions that are shipped with your product.

Steps

1. Power off the system and all attached peripherals. Disconnect the system from the electrical outlet, and disconnect the peripherals.
2. Remove the system cover.
3. Move the jumper on the system board from pins 2 and 4 to pins 4 and 6.
4. Replace the system cover.

   NOTE: The existing passwords are not disabled (erased) until the system boots with the jumper on pins 4 and 6. However, before you assign a new system and/or setup password, you must move the jumper back to pins 2 and 4.

   NOTE: If you assign a new system and/or setup password with the jumper on pins 4 and 6, the system disables the new password(s) the next time it boots.

5. Reconnect the peripherals and connect the system to the electrical outlet, and then power on the system.
6. Power off the system.
7. Remove the system cover.
8. Move the jumper on the system board from pins 4 and 6 to pins 2 and 4.
9. Replace the system cover.
10. Reconnect the peripherals and connect the system to the electrical outlet, and then power on the system.
11. Assign a new system and/or setup password.

11

System diagnostics and indicator codes

The diagnostic indicators on the system front panel display system status during system startup.

Topics:

- System health and system ID indicator codes
- iDRAC Direct LED indicator codes
- NIC indicator codes
- Power supply unit indicator codes
- Drive indicator codes
- Power button LED
- Using system diagnostics

System health and system ID indicator codes

The system health and system ID indicator is located on the left control panel of the system.

Figure 101. System health and system ID indicator

Table 86. System health and system ID indicator codes

System health and system ID indicator code	Condition
Solid blue	Indicates that the system is powered on, is healthy, and system ID mode is not active. Press the system health and system ID button to switch to system ID mode.

Table 86. System health and system ID indicator codes (continued)

System health and system ID indicator code	Condition
Blinking blue	Indicates that the system ID mode is active. Press the system health and system ID button to switch to system health mode.
Solid amber	Indicates that the system is in fail-safe mode. If the problem persists, see the Getting help section.
Blinking amber	Indicates that the system is experiencing a fault. Check the System Event Log for specific error messages. For information about the event and error messages generated by the system firmware and agents that monitor system components, go to PowerEdge Manuals.

iDRAC Direct LED indicator codes

The iDRAC Direct LED indicator lights up to indicate that the port is connected and is being used as a part of the iDRAC subsystem.

You can configure iDRAC Direct by using a USB to micro USB (type AB) cable, which you can connect to your laptop or tablet. Cable length should not exceed three feet (0.91 meters). Performance could be affected by cable quality. The following table describes iDRAC Direct activity when the iDRAC Direct port is active:

Table 87. iDRAC Direct LED indicator codes

iDRAC Direct LED indicator code	Condition
Solid green for two seconds	Indicates that the laptop or tablet is connected.
Blinking green (on for two seconds and off for two seconds)	Indicates that the laptop or tablet connected is recognized.
LED Indicator off	Indicates that the laptop or tablet is unplugged.

NIC indicator codes

Each NIC on the back of the system has indicators that provide information about the activity and link status. The activity LED indicator indicates if data is flowing through the NIC, and the link LED indicator indicates the speed of the connected network.

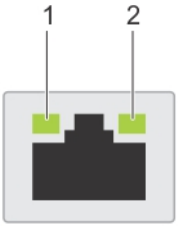

Figure 102. NIC indicator codes

1. Link LED indicator
2. Activity LED indicator

Table 88. NIC indicator codes

NIC indicator codes	Condition
Link and activity indicators are off.	Indicates that the NIC is not connected to the network.
Link indicator is green, and activity indicator is blinking green.	Indicates that the NIC is connected to a valid network at its maximum port speed, and data is being sent or received.
Link indicator is amber, and activity indicator is blinking green.	Indicates that the NIC is connected to a valid network at less than its maximum port speed, and data is being sent or received.

Table 88. NIC indicator codes (continued)

NIC indicator codes	Condition
Link indicator is green, and activity indicator is off.	Indicates that the NIC is connected to a valid network at its maximum port speed, and data is not being sent or received.
Link indicator is amber, and activity indicator is off.	Indicates that the NIC is connected to a valid network at less than its maximum port speed, and data is not being sent or received.
Link indicator is blinking green, and activity is off.	Indicates that the NIC identity is enabled through the NIC configuration utility.

Power supply unit indicator codes

AC and DC power supply units (PSUs) have an illuminated translucent handle that serves as an indicator. The indicator shows if power is present or if a power fault has occurred.

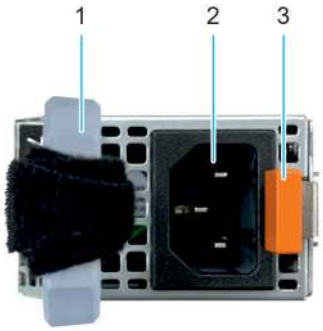

Figure 103. AC PSU status indicator

1. AC PSU handle
2. Socket
3. Release latch

Table 89. PSU status indicator codes

Power indicator codes	Condition
Green	Indicates that a valid power source is connected to the PSU and the PSU is operational.
Blinking amber	Indicates an issue with the PSU.
Not powered on	Indicates that the power is not connected to the PSU.
Blinking green	Indicates that the firmware of the PSU is being updated. **CAUTION: Do not disconnect the power cord or unplug the PSU when updating firmware. If firmware update is interrupted, the PSUs will not function.**
Blinking green and powers off	When hot-plugging a PSU, it blinks green five times at a rate of 4 Hz and powers off. This indicates a PSU mismatch due to efficiency, feature set, health status, or supported voltage. **CAUTION: If two PSUs are installed, both the PSUs must have the same type of label; for example, Extended Power Performance (EPP) label. Mixing PSUs from previous generations of PowerEdge servers is not supported, even if the PSUs have the same power rating. This results in a PSU mismatch condition or failure to power on the system.**

Table 89. PSU status indicator codes (continued)

Power indicator codes	Condition
	CAUTION: If two PSUs are used, they must be of the same type and have the same maximum output power. **CAUTION: When correcting a PSU mismatch, replace the PSU with the blinking indicator. Swapping the PSU to make a matched pair can result in an error condition and an unexpected system shutdown. To change from a high output configuration to a low output configuration or vice versa, you must power off the system.** **CAUTION: AC PSUs support both 240 V and 120 V input voltages with the exception of Titanium PSUs, which support only 240 V. When two identical PSUs receive different input voltages, they can output different wattages, and trigger a mismatch.**

Drive indicator codes

The LEDs on the drive carrier indicate the state of each drive. Each drive carrier has two LEDs: an activity LED (green) and a status LED (bicolor, green/amber). The activity LED blinks whenever the drive is accessed.

Figure 104. Drive indicators

1. Drive activity LED indicator
2. Drive status LED indicator
3. Drive capacity label

NOTE: If the drive is in the Advanced Host Controller Interface (AHCI) mode, the status LED indicator does not power on.

NOTE: Drive status indicator behavior is managed by Storage Spaces Direct. Not all drive status indicators may be used.

Table 90. Drive indicator codes

Drive status indicator code	Condition
Blinks green twice per second	Indicates that the drive is being identified or preparing for removal.
Not powered on	Indicates that the drive is ready for removal. **NOTE:** The drive status indicator remains off until all drives are initialized after the system is powered on. Drives are not ready for removal during this time.
Blinks green, amber, and then powers off	Indicates that there is an unexpected drive failure.
Blinks amber four times per second	Indicates that the drive has failed.
Blinks green slowly	Indicates that the drive is rebuilding.

Table 90. Drive indicator codes (continued)

Drive status indicator code	Condition
Solid green	Indicates that the drive is online.
Blinks green for three seconds, amber for three seconds, and then powers off after six seconds	Indicates that the rebuild has stopped.

Power button LED

The power button LED is located on the front panel of your system.

Figure 105. Power button LED

Table 91. Power button LED

Power button LED indicator code	Condition
Off	System is not operating, regardless of power supply available.
On	System is operating, one or more of the non-standby power supply units are active.
Slowly blinking	System is performing powering on sequence and iDRAC is still booting.

Using system diagnostics

If you experience an issue with the system, run the system diagnostics before contacting Dell for technical assistance. The purpose of running system diagnostics is to test the system hardware without using additional equipment or risking data loss. If you are unable to fix the issue yourself, service and support personnel can use the diagnostics results to help you solve the issue.

Dell Embedded System Diagnostics

NOTE: The Dell Embedded System Diagnostics is also known as Enhanced Pre-boot System Assessment (ePSA) diagnostics.

The Embedded System Diagnostics provide a set of options for particular device groups or devices allowing you to:

- Run tests automatically or in an interactive mode
- Repeat tests
- Display or save test results
- Run thorough tests to introduce additional test options to provide extra information about the failed device(s)
- View status messages that inform you if tests are completed successfully
- View error messages that inform you of issues encountered during testing

Running the Embedded System Diagnostics from Boot Manager

Run the Embedded System Diagnostics (ePSA) if your system does not boot.

Steps

1. When the system is booting, press F11.
2. Use the up arrow and down arrow keys to select **System Utilities** > **Launch Diagnostics**.
3. Alternatively, when the system is booting, press F10, select **Hardware Diagnostics** > **Run Hardware Diagnostics**.
   The **ePSA Pre-boot System Assessment** window is displayed, listing all devices detected in the system. The diagnostics starts executing the tests on all the detected devices.

Running the Embedded System Diagnostics from the Dell Lifecycle Controller

Steps

1. When the system is booting, press F10.
2. Select **Hardware Diagnostics** → **Run Hardware Diagnostics**.
   The **ePSA Pre-boot System Assessment** window is displayed, listing all devices detected in the system. The diagnostics start executing the tests on all the detected devices.

System diagnostic controls

Table 92. System diagnostic controls

Menu	Description
Configuration	Displays the configuration and status information of all detected devices.
Results	Displays the results of all tests that are run.
System health	Provides the current overview of the system performance.
Event log	Displays a timestamped log of the results of all tests run on the system. This is displayed if at least one event description is recorded.

12

Getting help

Topics:

- Recycling or End-of-Life service information
- Contacting Dell Technologies
- Accessing system information by using QR code
- Receiving automated support with Secure Connect Gateway (SCG)

Recycling or End-of-Life service information

Take back and recycling services are offered for this product in certain countries. If you want to dispose of system components, visit How to Recycle and select the relevant country.

Contacting Dell Technologies

Dell provides online and telephone based support and service options. If you do not have an active internet connection, you can find Dell contact information on your purchase invoice, packing slip, bill or Dell product catalog. The availability of services varies depending on the country and product, and some services may not be available in your area. To contact Dell for sales, technical assistance, or customer service issues follow these steps:

Steps

1. Go to Dell Support.
2. Select your country from the drop-down menu on the lower right corner of the page.
3. For customized support:
   a. Enter the system Service Tag in the **Enter a Service Tag, Serial Number, Service Request, Model, or Keyword** field.
   b. Click **Search**.
   The support page that lists the various support categories is displayed.
4. For general support:
   a. Select your product category.
   b. Select your product segment.
   c. Select your product.
   The support page that lists the various support categories is displayed.
5. For contact details of Dell Global Technical Support:
   a. Click Contact Technical Support.
   b. The **Contact Technical Support** page is displayed with details to call, chat, or e-mail the Dell Global Technical Support team.

Accessing system information by using QR code

There is also another QR code for accessing product information on the back of the system cover.

Prerequisites

Ensure that your smart phone or tablet has a QR code scanner installed.

The QR code includes the following information about your system:

- How-to videos

- Reference materials, including the Installation and Service Manual, and mechanical overview
- The system service tag to quickly access the specific hardware configuration and warranty information
- A direct link to Dell to contact technical support and sales teams

Steps

1. Go to PowerEdge Manuals, and navigate to your specific product or
2. Use your smart phone or tablet to scan the model-specific QR code on your system.

QR code for PowerEdge R260 system resources

Figure 106. QR code for PowerEdge R260 system

Receiving automated support with Secure Connect Gateway (SCG)

Dell Secure Connect Gateway (SCG) is an optional Dell Services offering that automates technical support for your Dell server, storage, and networking devices. By installing and setting up a Secure Connect Gateway (SCG) application in your IT environment, you can receive the following benefits:

- Automated issue detection — Secure Connect Gateway (SCG) monitors your Dell devices and automatically detects hardware issues, both proactively and predictively.
- Automated case creation — When an issue is detected, Secure Connect Gateway (SCG) automatically opens a support case with Dell Technical Support.

- Automated diagnostic collection — Secure Connect Gateway (SCG) automatically collects system state information from your devices and uploads it securely to Dell. This information is used by Dell Technical Support to troubleshoot the issue.
- Proactive contact — A Dell Technical Support agent contacts you about the support case and helps you resolve the issue.

The available benefits vary depending on the Dell Service entitlement purchased for your device. For more information about Secure Connect Gateway (SCG), go to secureconnectgateway.

13

Documentation resources

This section provides information about the documentation resources for your system.

To view the document that is listed in the documentation resources table:

- From the Dell support site:
  1. Click the documentation link that is provided in the Location column in the table.
  2. Click the required product or product version.

     NOTE: To locate the model number, see the front of your system.

  3. On the Product Support page, click **Documentation**.
- Using search engines:
  - Type the name and version of the document in the search box.

Table 93. Additional documentation resources for your system

Task	Document	Location
Setting up your system	For information about setting up your system, see the *Getting Started Guide* document that is shipped with your system.	PowerEdge Manuals
Configuring your system	For information about the iDRAC features, configuring and logging in to iDRAC, and managing your system remotely, see the Integrated Dell Remote Access Controller User's Guide. For information about understanding Remote Access Controller Admin (RACADM) subcommands and supported RACADM interfaces, see the RACADM CLI Guide for iDRAC. For information about Redfish and its protocol, supported schema, and Redfish Eventing implemented in iDRAC, see the Redfish API Guide. For information about iDRAC property database group and object descriptions, see the Attribute Registry Guide. For information about Intel QuickAssist Technology, see the Integrated Dell Remote Access Controller User's Guide.	PowerEdge Manuals
	For information about earlier versions of, the iDRAC documents. To identify the version of iDRAC available on your system, on the iDRAC web interface, click **?** > **About**.	iDRAC Manuals
	For information about installing the operating system, see the operating system documentation.	Operating System Manuals

Table 93. Additional documentation resources for your system (continued)

Task	Document	Location
	For information about updating drivers and firmware, see the Methods to download firmware and drivers section in this document.	Drivers
Managing your system	For information about systems management software offered by Dell, see the Dell OpenManage Systems Management Overview Guide.	PowerEdge Manuals
	For information about setting up, using, and troubleshooting OpenManage, see the Dell OpenManage Server Administrator User's Guide.	OpenManage Manuals
	For information about installing and using Dell Secure Connect Gateway, see the Dell Secure Connect Gateway Enterprise User's Guide.	serviceability tools
	For information about partner programs enterprise systems management, see the OpenManage Connections Enterprise Systems Management documents.	OpenManage Manuals
Working with the Dell PowerEdge RAID controllers (if applicable)	For information about understanding the features of the Dell PowerEdge RAID controllers (PERC), Software RAID controllers, or BOSS card and deploying the cards, see the Storage controller documentation.	Storage Controller Manuals
Understanding event and error messages	For information about the event and error messages that are generated by the system firmware and agents that monitor system components, see the EEMI guide.	EEMI guide
Troubleshooting your system	For information about identifying and troubleshooting the PowerEdge server issues, see the Server Troubleshooting Guide.	PowerEdge Manuals