SHARP

OPERATION MANUAL

Large Format Display

MultiSync®

PN-M652

PN-M552

PN-M502

PN-M432

PN-P656

PN-P556

PN-P506

PN-P436

HDMI™

MODEL: PN-M652, PN-M552, PN-M502, PN-M432, PN-P656, PN-P556, PN-P506, PN-P436
Please find your model name on the label on the rear side of the monitor.

Table of Contents

DEAR CUSTOMER **2**
Important Information **3**
Safety Precautions and Maintenance 5
Recommended Use & Maintenance 11
Trademark and Software License 12
MOUNTING PRECAUTIONS 12
Part Names **16**
Connecting Peripheral Equipment **18**
Preparing the Remote Control Unit **21**
Installing the batteries 21
Remote control operation range 21
Turning Power On/Off **22**
Turning on the main power 22
Turning power on 22
Turning power off 23
Power ON and OFF 23
Using Power Management 24
Basic Operation **25**
Using the button and key 25
Using the remote control unit 25
Menu Items **29**
Opening the menu window 29
Menu item details 30
Advanced Operation **53**
Advanced Color Adjustment 54
Setting Security and Locking the Monitor Controls 58
Setting the Remote Control ID Function 62
Connecting Multiple Monitors 63
Video Out Connection 66
Controlling the Monitor with a computer (RS-232C) **67**
Controlling the Monitor with a computer (LAN) **68**
Commands 84
Proof of Play 85
Troubleshooting **86**
Screen Image and Video Signal Issues 86
Hardware Issues 87
Specifications **89**
Appendix-A External Resources **94**
Mounting Precautions
(For SHARP dealers and service engineers) **96**
Manufacturer's Recycling and Energy Information **99**
Energy Saving 99
About Crestron Connected **100**

DEAR CUSTOMER

Thank you for your purchase of a product. To ensure safety and many years of trouble-free operation of your product, please read the "Safety Precautions and Maintenance" carefully before using this product.

Mounting the monitor requires expertise and the work must be carefully performed by a trained service person in accordance with the section "Mounting Precautions (For SHARP dealers and service engineers)".

NOTE:

Product warranty does not cover damage caused by improper installation. Failure to follow these recommendations could result in voiding the warranty.

Important Information

IMPORTANT:

To aid reporting in case of loss or theft, please record the product's model and serial numbers in the space provided. The numbers are located in the rear of the product.

Model No.:

Serial No.:

U.S.A. ONLY

To maintain compliance with EMC regulations, use shielded cables to connect to the following terminals: HDMI input terminal, DisplayPort input terminal, USB Type-C1 (upstream) port, USB Type-C2 (downstream) port, RS-232C input terminal. Use shielded cables with ferrite core to connect to the following terminals: USB Type-A port.

Supplier's Declaration of Conformity

SHARP LCD MONITOR, PN-M652, PN-M552, PN-M502, PN-M432, PN-P656, PN-P556, PN-P506, PN-P436

This device complies with Part 15 of the FCC Rules. Operation is subject to the following two conditions: (1) This device may not cause harmful interference, and (2) this device must accept any interference received, including interference that may cause undesired operation.

Responsible Party:

SHARP ELECTRONICS CORPORATION
100 Paragon Drive, Montvale, NJ 07645
TEL: (630) 467-3000 www.sharpusa.com

U.S.A. ONLY

WARNING:
FCC Regulations state that any unauthorized changes or modifications to this equipment not expressly approved by the manufacturer could void the user's authority to operate this equipment.

NOTE:
This equipment has been tested and found to comply with the limits for a Class B digital device, pursuant to Part 15 of the FCC Rules. These limits are designed to provide reasonable protection against harmful interference in a residential installation.
This equipment generates, uses and can radiate radio frequency energy and, if not installed and used in accordance with the instructions, may cause harmful interference to radio communications. However, there is no guarantee that interference will not occur in a particular installation.
If this equipment does cause harmful interference to radio or television reception, which can be determined by turning the equipment off and on, the user is encouraged to try to correct the interference by one or more of the following measures:
- Reorient or relocate the receiving antenna.
- Increase the separation between the equipment and receiver.
- Connect the equipment into an outlet on a circuit different from that to which the receiver is connected.
- Consult the dealer or an experienced radio/TV technician for help.

U.S.A. ONLY

WARNING:
An apparatus with CLASS I construction shall be connected to a MAIN socket outlet with a protective earthing connection.

This product is designed for commercial application only and as such it falls outside the scope of Regulation (EU) 2023/826 laying down ecodesign requirements for off mode, standby mode, and networked standby energy consumption. Sharp do not recommend the product for domestic application and will not accept any liability for such use.

(For Customers in U.K.)

IMPORTANT

- The wires in this mains lead are coloured in accordance with the following code:

GREEN-AND-YELLOW:	**"Earth"**
BLUE:	**"Neutral"**
BROWN:	**"Live"**

- As the colours of the wires in the mains lead of this apparatus may not correspond with the coloured markings identifying the terminals in your plug proceed as follows:
  - The wire which is coloured GREEN-AND-YELLOW must be connected to the terminal in the plug which is marked by the letter **E** or by the safety earth symbol ⏚ or coloured green or green-and-yellow.
  - The wire which is coloured BLUE must be connected to the terminal which is marked with the letter **N** or coloured black.
  - The wire which is coloured BROWN must be connected to the terminal which is marked with the letter **L** or coloured red.
- Ensure that your equipment is connected correctly. If you are in any doubt consult a qualified electrician.

"WARNING: THIS APPARATUS MUST BE EARTHED."

Information on the Disposal of this Equipment and its Batteries

IF YOU WISH TO DISPOSE OF THIS EQUIPMENT OR ITS BATTERIES, DO NOT USE THE ORDINARY WASTE BIN, AND DO NOT PUT THEM INTO A FIREPLACE!
Used electrical and electronic equipment and batteries should always be collected and treated SEPARATELY in accordance with local law.
Separate collection promotes an environment-friendly treatment, recycling of materials, and minimizing final disposal of waste. IMPROPER DISPOSAL can be harmful to human health and the environment due to certain substances! Take USED EQUIPMENT to a local, usually municipal, collection facility, where available.
Remove USED BATTERIES from equipment, and take them to a battery collection facility; usually a place where new batteries are sold.
If in doubt about disposal, contact your local authorities or dealer and ask for the correct method of disposal.
ONLY FOR USERS IN THE EUROPEAN UNION, AND SOME OTHER COUNTRIES; FOR INSTANCE NORWAY AND SWITZERLAND: Your participation in separate collection is requested by law.
The symbol shown above appears on electrical and electronic equipment and batteries (or the packaging) to remind users of this. If 'Hg' or 'Pb' appears below the symbol, this means that the battery contains traces of mercury (Hg) or lead (Pb), respectively.
Users from PRIVATE HOUSEHOLDS are requested to use existing return facilities for used equipment and batteries. Batteries are collected at points of sale. Return is free of charge.
If the equipment has been used for BUSINESS PURPOSES, please contact your SHARP dealer who will inform you about take-back. You might be charged for the costs arising from take-back. Small equipment (and small quantities) might be taken back by your local collection facility. For Spain: Please contact the established collection system or your local authority for take-back of your used products.

NOTE:
(1) The contents of this manual may not be reprinted in part or whole without permission.
(2) The contents of this manual are subject to change without notice.
(3) Great care has been taken in the preparation of this manual; however, should you notice any questionable points, errors or omissions, please contact us.
(4) The image shown in this manual is indicative only. If there is inconsistency between the image and the actual product, the actual product shall govern.
(5) Notwithstanding articles (3) and (4), we will not be responsible for any claims on loss of profit or other matters deemed to result from using this device.
(6) This manual is commonly provided to all regions so they may contain descriptions that are pertinent for other countries.
(7) Language of OSD menu used in this manual is English by way of example.

Safety Precautions and Maintenance

FOR OPTIMUM PERFORMANCE, PLEASE NOTE
THE FOLLOWING WHEN SETTING UP AND
USING THE LCD COLOR MONITOR:

About the Symbols

To ensure safe and proper use of the product, this manual uses a number of symbols to prevent injury to you and others as well as damage to property. The symbols and their meanings are described below. Be sure to understand them thoroughly before reading this manual.

WARNING	Failing to heed this symbol and handling the product incorrectly could result in accidents leading to major injury or death.
CAUTION	Failing to heed this symbol and handling the product incorrectly could result in personal injury or damage to surrounding property.

Examples of symbols

	This symbol indicates a warning or caution.
	This symbol indicates a prohibited action.
	This symbol indicates a mandatory action.

WARNING	
UNPLUG THE POWER CORD	Unplug the power cord if the product malfunctions. Should the product emit smoke or strange odors or sounds, or if the product has been dropped or the cabinet broken, turn off the product's power, then unplug the power cord from the power outlet. Contact your dealer for repairs. Never try to repair the product on your own. Doing so is dangerous.
DO NOT MODIFY	Do not open or remove the product's cabinet. Do not disassemble the product. There are high voltage areas in the product. Opening or removing product covers and modifying the product may expose you to electric shock, fire, or other risks. Refer all servicing to qualified service personnel.
PROHIBITED	Do not use the product if it has structural damage. If you notice any structural damage such as cracks or unnatural wobbling, please refer servicing to qualified service personnel. If the product is used in this condition, the product may fall or cause personal injury.

⚠ WARNING	
Handling the power cord.	
PROHIBITED	Do not scratch or modify the cord. • Do not place heavy objects on the cord. • Do not let the weight of the product rest on the cord. • Do not cover the cord with a rug, etc. • Do not bend, twist or pull the cord with excessive force. • Do not apply heat to the cord. Handle the power cord with care. Damaging the cord could lead to fire or electric shock. If the cord gets damaged (exposed core wires, broken wires, etc.), turn off the product's power, then unplug the power cord from the power outlet. Ask your dealer to replace it.
DO NOT TOUCH	Do not touch the power plug if you hear thunder. Doing so could result in electric shock.
DO NOT TOUCH WITH WET HANDS	Do not connect or disconnect the power cord with wet hands. It may cause an electric shock.
REQUIRED	Please use the power cord provided with this product. Do not exceed the product's specified power supply voltage where it is installed. Doing so could result in a fire or electric shock. Please refer to the power supply voltage information in the specification. If a power cord is not supplied with this product, please contact us. For all other cases, please use the power cord with the plug style that matches the power socket where the product is located. The compatible power cord corresponds to the AC voltage of the power outlet and has been approved by, and complies with, the safety standards in the country of purchase.
MUST BE EARTHED	This equipment is designed to be used in the condition of the power cord connected to the earth. If the power cord is not connected to the earth, it may cause electric shock. Please make sure the power cord is connected to the wall outlet directly and earthed properly. Do not use a 2-pin plug converter adapter.
REQUIRED	For proper installation it is strongly recommended to use a trained service person. Failure to follow the standard installation procedures could result in damage to the product or injury to the user or installer.
REQUIRED	Please install the product in accordance with the following information. This product cannot be used or installed without the table top stand or other mounting accessory for support. When transporting, moving, or installing the product, please use as many people as necessary (at least two) to be able to lift the product by the two handles without causing personal injury or damage to the product. • PN-M652, PN-P656: DO NOT use this product on the floor with the table top stand. Please use this product on a table or with a mounting accessory for support. Please refer to the instructions included with the optional mounting equipment for detailed information about attaching or removing. Do not cover the vents on the product. Improper installation of the product may result in damage to the product, an electric shock or fire.

⚠ WARNING

REQUIRED

Do not install the product in the locations below:

- Poorly ventilated spaces.
- Near a radiator, other heat sources, or in direct sunshine.
- Continual vibration areas.
- Humid, dusty, steamy, or oily areas.
- An environment where there are corrosive gases (sulfur dioxide, hydrogen sulfide, nitrogen dioxide, chlorine, ammonia, ozone, etc.).
- Outdoors.
- High-temperature environment where humidity changes rapidly and condensation is likely to occur.
- A ceiling or wall that is not strong enough to support the product and mounting accessories.

Do not mount the product upside down.

REQUIRED

Prevent tipping and falling for earthquakes or other shocks.
To prevent personal injury or damage to the product caused by tipping over due to earthquakes or other shocks, make sure to install the product in a stable location and take measures to prevent falling.
The measures to prevent falling and tipping are intended for reducing the risk of injury, but may not guarantee the effectiveness against all earthquakes.

The product may tip causing personal injury.

- When using the product with the optional table top stand, fasten the product to a wall using a cord or chain that can support the weight of the product in order to prevent the product from falling.
- Depending on the table top stand, the stand has the structure for preventing tipping.
- Please refer to the table top stand manual.
- Be sure to remove the cord or chain from the wall before moving the product to prevent personal injury or damage to the product.

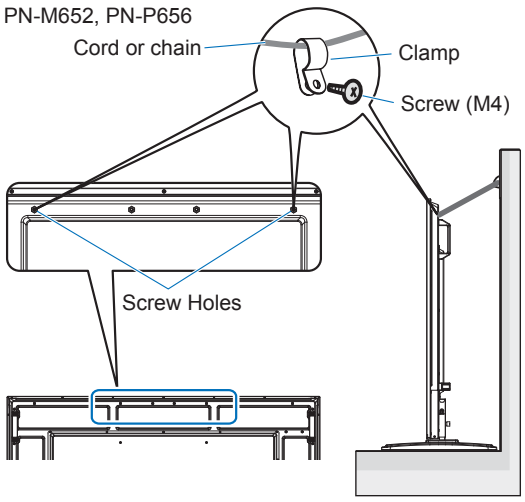

The product may fall causing personal injury.

- Do not attempt to hang the product using an installation safety wire.
- Please install the product in an area on the wall or ceiling strong enough to support the weight of the product.
- Prepare the product using mounting accessories, such as hook, eyebolt, or mounting parts, and then secure the product with a safety wire. The safety wire must not be tight.
- Please make sure the mounting accessories are strong enough to support the product weight and size before installing it.

	WARNING
REQUIRED	Stability Hazard. The product may fall, causing serious personal injury or death. To prevent injury, this product must be securely attached to the floor/wall in accordance with the installation instructions. Many injuries, particularly to children, can be avoided by taking simple precautions such as: • ALWAYS use stands or installation methods recommended by the manufacturer of the product set. • ALWAYS use furniture that can safely support the product. • ALWAYS ensure the product is not overhanging the edge of the supporting furniture. • ALWAYS educate children about the dangers of climbing on furniture to reach the product or its controls. • ALWAYS route cords and cables connected to your product so they cannot be tripped over, pulled or grabbed. • NEVER place a product in an unstable location. • NEVER place the product on tall furniture (for example, cupboards or bookcases) without anchoring both the furniture and the product to a suitable support. • NEVER place the product on cloth or other materials that may be located between the product and supporting furniture. • NEVER place items that might tempt children to climb, such as toys and remote controls, on the top of the product or furniture on which the product is placed. If the existing product is going to be retained and relocated, the same considerations as above should be applied.
PROHIBITED	Do not place this product on a sloping or unstable cart, stand or table. Doing so could lead to falling or tipping and cause personal injury.
PROHIBITED	Do not insert objects of any kind into the cabinet slots. It may cause electric shock, fire, or product failure. Keep objects away from children and babies. If objects get into the cabinet slot, turn off the product's power, then unplug the power cord from the power outlet. Contact your dealer for repairs.
DO NOT WET	Do not spill any liquids into the cabinet or use your product near water. Immediately turn off the power and unplug your product from the wall outlet, then refer servicing to qualified service personnel. It may cause an electric shock or start a fire. Do not install the product under equipment that discharges water, such as air conditioners.
PROHIBITED	Do not use flammable gas sprays to remove dust when cleaning the product. Doing so could lead to a fire.
REQUIRED	Securely fasten the Option Board. Ensure the Option Board is securely fastened using the original screws to prevent the Option Board from falling out the product. A falling Option Board may expose you to danger.
PROHIBITED	Usage of the product must not be accompanied by fatal risks or dangers that, could lead directly to death, personal injury, severe physical damage or other loss, including nuclear reaction control in nuclear facility, medical life support system, and missile launch control in a weapon system.

CAUTION	
Handling the power cord.	
REQUIRED	The monitor should be installed close to an easily accessible power outlet.
REQUIRED	When connecting the power cord to the product's AC input terminal, make sure the connector is fully and firmly inserted. An incomplete connection of the power cord may cause overheating of the plug; it allows dust to get on the plug connection, which can lead to a fire. Touching the pins of a partially inserted plug may lead to an electric shock. If a cable clamp and a screw are provided with the product, fasten the power cord to the product by attaching them to prevent a loose connection.
REQUIRED	Handling the power cord by following below to avoid fire or electric shock. • When connecting or disconnecting the power cord, pull the power cord out by holding onto its plug. • Unplug the power cord from the power outlet before cleaning the product or when not planning to use the product for an extended time. • When the power cord or plug is heat or damaged, unplug the power cord from the power outlet, and contact a qualified service person.
REQUIRED	Regularly dust off the power cord by using a soft dry cloth.
REQUIRED	Before moving the product, make sure the product power is off, then unplug the power cord from the power outlet and check that all cables connecting the product to other devices are disconnected.
PROHIBITED	Do not use the power cord with a power tap. Adding an extension cord may lead to fire as a result of overheating.
PROHIBITED	Do not bind the power cord and the USB cable. It may trap heat and cause a fire.
PROHIBITED	Do not connect to a LAN with excessive voltage. When using a LAN cable, do not connect to a peripheral device with wiring that might have excessive voltage. Excessive voltage on the LAN terminal may cause an electric shock.
PROHIBITED	Do not climb on the table where the product is installed. Do not install the product on a wheeled table if the wheels on the table have not been properly locked. The product may fall, causing damage to the product or personal injury.
REQUIRED	Installation, removal, and height adjustment of the optional table top stand. • When installing the table top stand, handle the unit with care to avoid pinching your fingers. • Installing the product at the wrong height can cause tipping. Please install your product at proper height to prevent personal injury or damage to the product.
PROHIBITED	Do not push or climb on the product. Do not grab or hang onto the product. Do not rub or tap the product with hard objects. The product may fall, causing damage to the product or personal injury.
PROHIBITED	Do not hit or strike the screen. Do not push against the screen with a pointed object. It can cause serious damage to the product or personal injury.

	CAUTION
REQUIRED	Incorrect usage of batteries can result in leaks or bursting. • Use the specified batteries only. • Insert batteries matching the (+) and (–) signs on each battery to the (+) and (–) signs of the battery compartment. • Do not mix battery brands. • Do not combine new and old batteries. This can shorten battery life or cause liquid leakage of batteries. • Remove dead batteries immediately to prevent battery acid from leaking into the battery compartment. If leaked battery fluid gets on your skin or clothing, rinse immediately and thoroughly. If it gets into your eye, bathe your eye well rather than rubbing and seek medical treatment immediately. Leaked battery fluid that gets into your eye or your clothing may cause a skin irritation or damage your eye. • If you will not use the Remote control unit for a long time, remove the batteries. • Leaving a battery in an extremely high temperature surrounding environment, or a battery subject to extremely low air pressure, that can result in an explosion or the leakage of flammable liquid or gas. • Properly dispose of depleted batteries. Disposal of a battery into water, fire, or a hot oven, or mechanically crushing, cutting, or modifying a battery can result in an explosion. • Do not short-circuit the batteries. • Do not charge the batteries. The batteries provided are not rechargeable. • Contact your dealer or local authorities when disposing of batteries.
PROHIBITED	Do not stay in contact with the parts of the product that become hot for long periods of time. Doing so may result in low-temperature burns.
REQUIRED	Suitable for entertainment purposes at controlled luminous environments, to avoid disturbing reflections from the screen.
REQUIRED	We recommend wiping clean the ventilation opening a minimum of once a month. Failure to do so could lead to fire or electric shock or damage to the product.
REQUIRED	To ensure the product's reliability, please clean the ventilation opening at the rear side of the cabinet at least once a year to remove dirt and dust. Failure to do so could lead to fire or electric shock or damage to the product.
REQUIRED	Avoid locations with extreme temperatures and humidity. Failure to do so could lead to fire or electric shock or damage to the product. The usage environment for this product is as follows: • The operating temperature: 0 °C to 40 °C/32 °F to 104 °F/ humidity: 20 to 80% (without condensation) • The storage temperature: -20 °C to 60 °C/-4 °F to 140 °F/ humidity: 10 to 80% (without condensation)

NOTE:
- This product can only be serviced in the country where it was purchased.
- When you use a network, your communication data is exposed to the risks of being stolen or illegally accessed. To avoid these risks, you need to use this monitor in a secure network environment.

Recommended Use & Maintenance

■Recommended Use

Ergonomics

To realize the maximum ergonomic benefits, we recommend the following:

- For optimum performance of the monitor, allow 20 minutes for warming up. Avoid reproduction of still patterns on the monitor for long periods of time to avoid image persistence (after image effects).
- Rest your eyes periodically by focusing on an object at least 5 feet away. Blink often.
- Position the monitor at a 90° angle to windows and other light sources to minimize glare and reflections.
- Adjust the monitor's brightness, contrast and sharpness controls to enhance readability.
- Get regular eye checkups.
- Use the preset Size and Position controls with standard input signals.
- Use the preset color settings.
- Use non-interlaced signals.
- Do not view the primary color blue on a dark background. It is difficult to see and may cause eye fatigue due to insufficient contrast.

■Maintenance

Cleaning the LCD Screen

- When the LCD screen is dusty, please gently wipe with a soft cloth.
- Clean the LCD screen surface with a lint-free, non-abrasive cloth. Avoid using any cleaning solution or glass cleaner!
- Please do not rub the LCD screen with a hard or abrasive material.
- Please do not apply pressure to the LCD screen surface.
- Please do not use OA cleaner as it will cause deterioration or discoloration on the LCD screen surface.

Cleaning the Cabinet

- Unplug the power supply.
- Gently wipe the cabinet with a soft cloth.
- To clean the cabinet, dampen the cloth with a neutral detergent and water, wipe the cabinet and follow with a dry cloth.

NOTE: DO NOT clean with benzene thinner, alkaline detergent, alcoholic system detergent, glass cleaner, wax, polish cleaner, soap powder, or insecticide. Rubber or vinyl should not be in contact with the cabinet for an extended period of time.
These types of fluids and materials can cause the paint to deteriorate, crack or peel.

Trademark and Software License

Microsoft® and Windows® are trademarks of the Microsoft group of companies.

DisplayPort™ and the DisplayPort™ logo are trademarks owned by the Video Electronics Standards Association (VESA®) in the United States and other countries.

Adobe and the Adobe logo are either registered trademarks or trademarks of Adobe Systems Incorporated in the United States and/or other countries.

MultiSync is a trademark or registered trademark of Sharp NEC Display Solutions, Ltd. in Japan and other countries.

The terms HDMI, HDMI High-Definition Multimedia Interface, HDMI Trade dress and the HDMI Logos are trademarks or registered trademarks of HDMI Licensing Administrator, Inc.

Blu-ray is a trademark of Blu-ray Disc Association.

TILE COMP is trademark or registered trademark of Sharp NEC Display Solutions, Ltd. in Japan and other countries.

Intel and the Intel logo are trademarks of Intel Corporation or its subsidiaries.

Crestron™, the Crestron logo, Crestron Connected™, Crestron Fusion™, and Xio Cloud™ are either trademarks or registered trademarks of Crestron Electronics, Inc. in the United States and/or other countries.

All other brands and product names are trademarks or registered trademarks of their respective owners.

MOUNTING PRECAUTIONS

■For Customer

Please contact your supplier as they may be able to provide a list of qualified installation professionals. Mounting on a wall or ceiling and hiring a technician is the customer's responsibility.

Maintenance

- Periodically check for loose screws, gaps, distortions, or other problems that may occur with the mounting equipment. If a problem is detected, please refer to qualified personnel for service.
- Regularly check the mounting location for signs of damage or weakness that may occur over time.

NOTE: If using a cover made of glass or acrylic to protect the panel surface of the main unit, the panel is sealed and the internal temperature rises.
Reduce the monitor's brightness to prevent the internal temperature from rising. If the monitor is connected to a computer, use the computer's power management function to control the monitor's automatic power off.

■For Trained Installers

For SHARP dealers or service engineers, please confirm "Mounting Precautions (For SHARP dealers and service engineers)". (See page 96).

Carefully inspect the location where the unit is to be mounted. Not all walls or ceilings are capable of supporting the weight of the unit. The weight of this monitor is provided in the specifications (see "Product Specifications" on page 90). Product warranty does not cover damage caused by improper installation, re-modeling, or natural disasters. Failure to comply with these recommendations could result in voiding the warranty.

To ensure safe installation, use two or more brackets to mount the unit. Mount the unit to at least two points on the installation location.

Allow for adequate ventilation or provide air conditioning around the monitor, so that heat can properly dissipate away from the monitor and from the mounting equipment.

MOUNTING PRECAUTIONS (Continued)

■Ventilation Requirements

When mounting in an enclosed space or recessed area, leave adequate room between the monitor and the enclosure to allow heat to disperse, as shown below.

NOTE:
- Allow adequate ventilation or provide air conditioning around the monitor, so that heat can properly dissipate away from the unit and the mounting equipment; especially when you use monitors in a multiple screen configuration.
- This monitor has internal temperature sensors.
  If the monitor overheats, a “Caution” warning appears. If the “Caution” warning appears, stop using the unit, turn off the power and allow it to cool.
- This monitor should be used at an ambient temperature between 32°F (0°C) and 104°F (40°C). Provide enough space around the monitor to prevent heat from accumulating inside.
- Temperature condition may change when using the monitor together with the optional equipments recommended by SHARP. In such cases, please check the temperature condition specified by the optional equipments.

For the monitor in landscape orientation

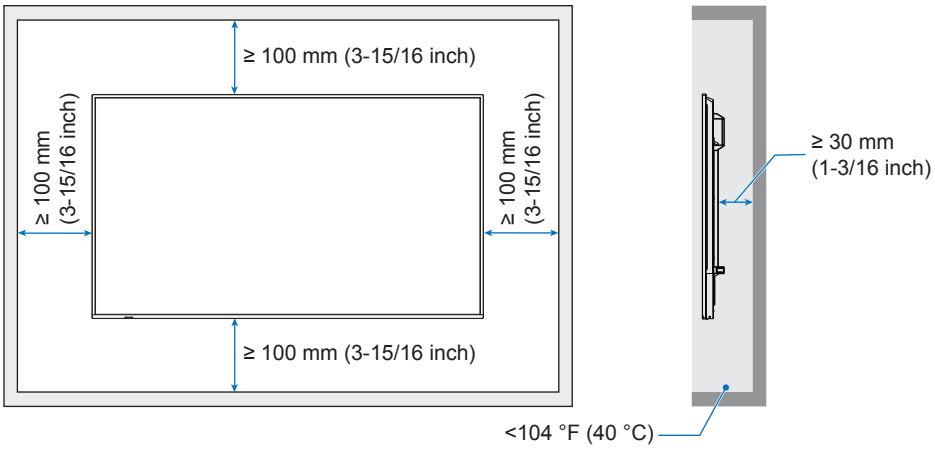

For the monitor in portrait orientation

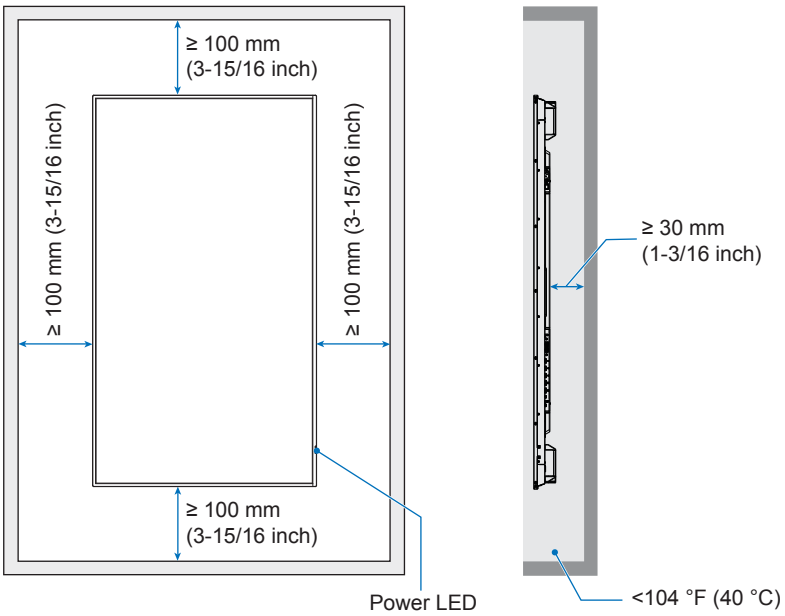

MOUNTING PRECAUTIONS (Continued)

NOTE: When used in a video wall configuration for a long time, slight expansion of the monitors may happen due to temperature changes. It is recommended that a gap of over one millimeter is kept between adjacent monitor edges.

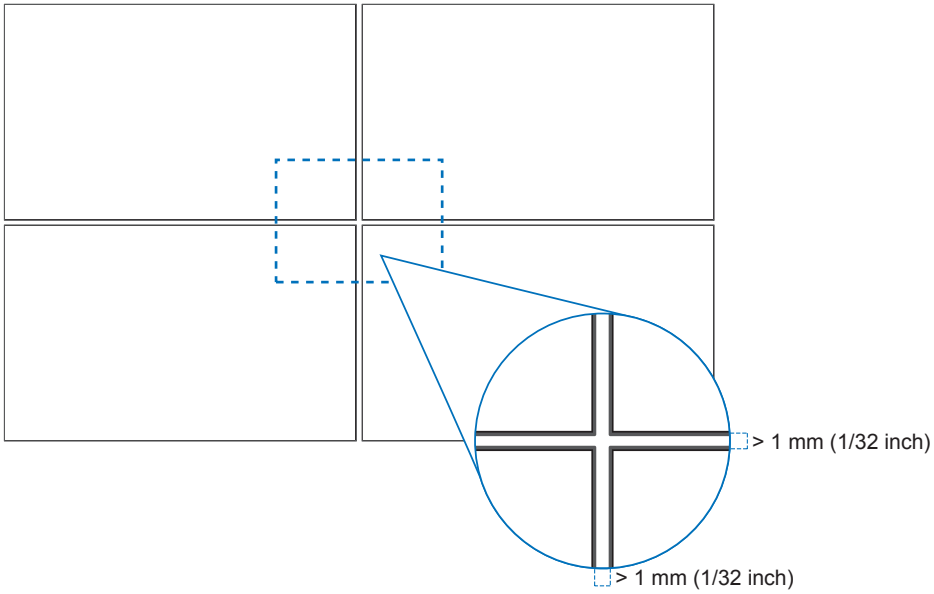

■Orientation

- When using this monitor in a portrait position (viewing from the front), ensure to rotate it counterclockwise so that the right side is moved to the top and the left side is moved to the bottom.
- If installed in the wrong orientation, heat may be trapped inside the main unit and the lifetime of the monitor may be shortened.
- It cannot be installed upside down.

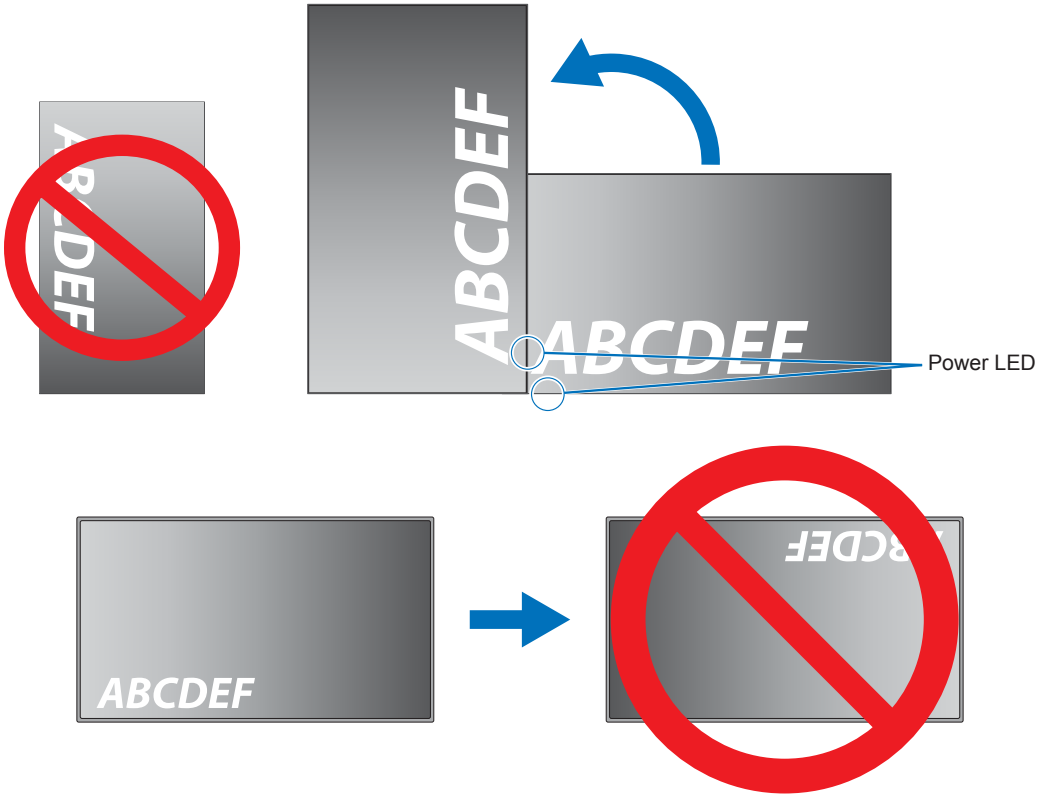

MOUNTING PRECAUTIONS (Continued)

The monitor should not tilt 21° or more.

NOTE: Installing the monitor at an angle of 21° or more may cause a malfunction.

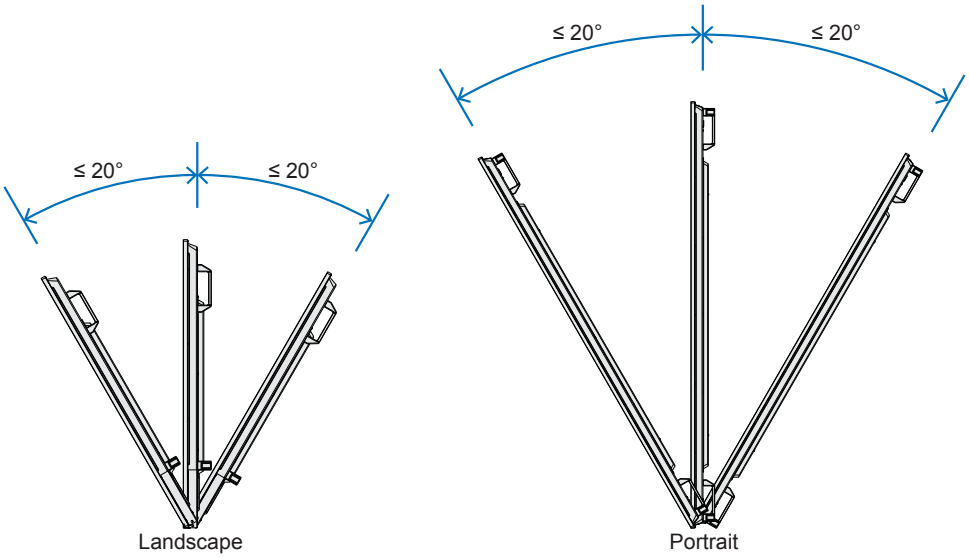

■Clamp the power cord

Be sure to clamp the power cord (supplied) using the supplied cable clamp. When clamping the power cord, take care not to stress the terminal of the power cord. Do not bend the power cord excessively.

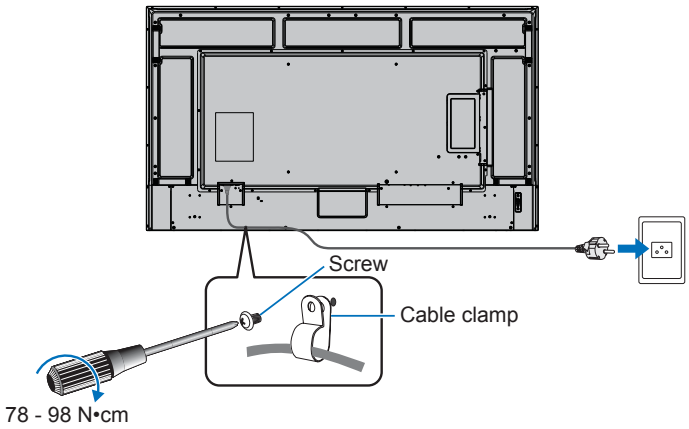

Supplied Components

If any components are missing, please contact your dealer.

- ☐ LCD monitor: 1
- ☐ Remote control unit: 1
- ☐ Cable clamp: 1
- ☐ Screw (M4): 1
- ☐ Power cord
- ☐ Remote control unit battery*1: 2
- ☐ Setup Manual: 1
- ☐ HDMI cable: 1
- ☐ Slot cover: 1 set

*1: Depending on the country where the LCD monitor is shipped to, AAA batteries are not included in the box contents.

Please note: do not dispose of batteries in household waste for environmental protection. Follow the disposal instructions for your area.

TIP: Please refer to Option Board Installation Manual for the procedure for installing the slot cover.

Part Names

■Front View

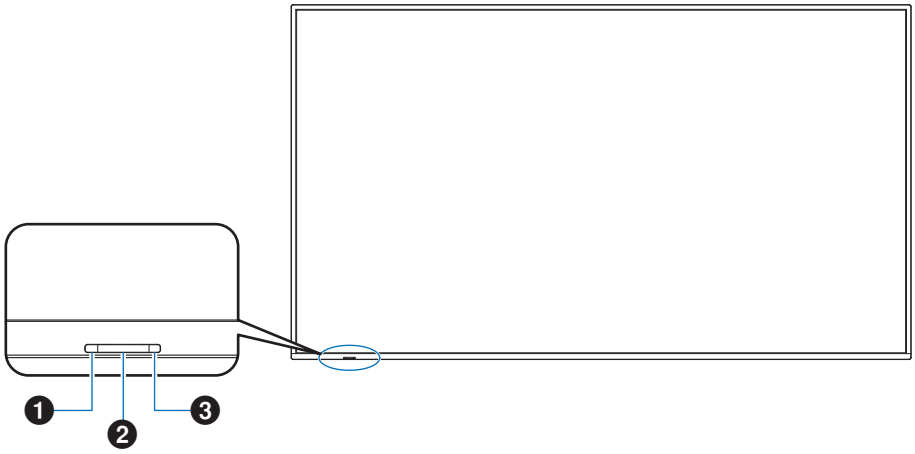

❶ **Power LED (See page 22)**

❷ **Remote Control Sensor (See page 21)**

❸ **Ambient light sensor (See page 37)**

TIP: The Ambient light sensor detects the level of ambient light, allowing the monitor to make automatic adjustments to the backlight setting, resulting in a more comfortable viewing experience. Do not cover this sensor.

■Rear View

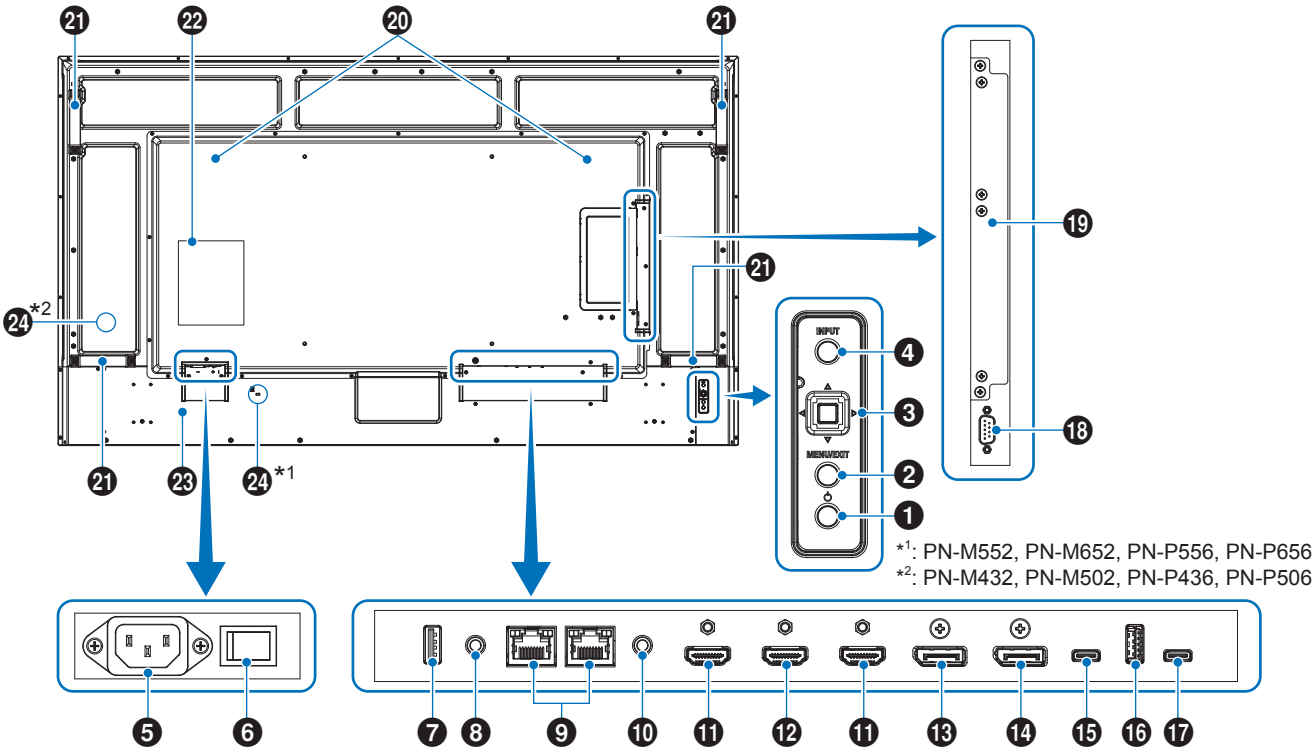

*1: PN-M552, PN-M652, PN-P556, PN-P656
*2: PN-M432, PN-M502, PN-P436, PN-P506

❶ Power Button (See page 25)

❷ MENU/EXIT Button (See page 25)

❸ Joystick Key/SET Button (See page 25)

❹ INPUT Button (See page 25)

❺ AC input terminal (See page 20)

❻ Main Power Switch (See page 22)

❼ Service Port (See page 18)

❽ Audio output terminal (See page 18)

❾ LAN terminal (See page 18)

❿ REMOTE input terminal (See page 18)

⓫ HDMI 1/2 input terminal (HDMI1 (ARC)/HDMI2) (See page 18)

⓬ HDMI output terminal (See page 19)

⓭ DisplayPort input terminal (See page 19)

⓮ DisplayPort output terminal (See page 19)

⓯ USB Type-C1 (upstream) port (See page 19)

⓰ USB Type-A port (See page 19)

⓱ USB Type-C2 (downstream) port(See page 19)

⓲ RS-232C input terminal (See page 20)

⓳ Raspberry Pi Compute Module Slot/ Option Board Slot

⓴ Internal Speaker

㉑ Handle
(two handles on the PN-M552, PN-M502, PN-M432, PN-P556, PN-P506, PN-P436)

㉒ Label

㉓ Vents

㉔ Security Slot
Kensington compatible slot designed for physical security and theft protection.

■Remote control unit

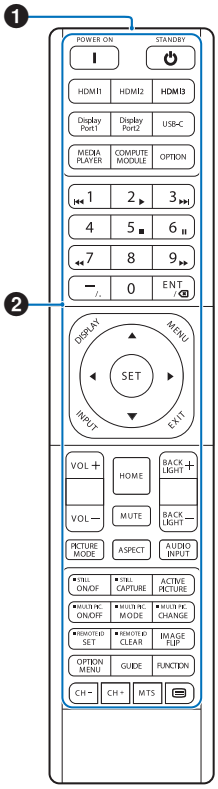

❶ Signal transmitter

❷ Operation buttons (See page 25)

Connecting Peripheral Equipment

■Rear View

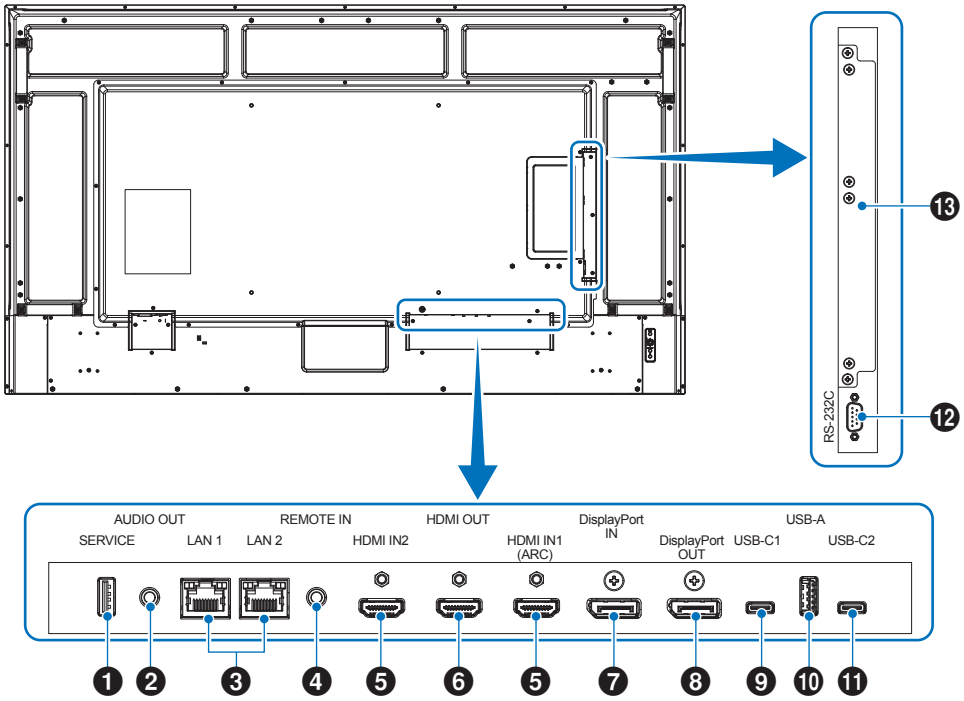

TIP:
- Before making connections:
- Turn off the device's power before connecting it to the monitor.
- Refer to the device's user manual for available connection types and instructions for the device.
- We recommend turning off the monitor's main power before connecting or disconnecting a USB flash drive to avoid data corruption.
- Check the USB flash drive for viruses as necessary.

❶ Service port

USB Hub/0.5 A. Service port. For firmware updates.

❷ Audio output terminal

Audio signal output to an external device (stereo receiver, amplifier, etc.).

NOTE: This terminal is not a headphone terminal.

❸ LAN terminal (RJ-45)

Connect to LAN in order to manage and control the monitor over the network.

Control multiple monitors when using a LAN daisy-chain connection.

- Please connect the LAN cable to the LAN1 port for LAN network communications.
- Please refer to Multiple Monitors Connection (see page 63).

❹ REMOTE input terminal

Use an optional sensor unit by connecting it to your monitor.

NOTE: Do not use this terminal unless specified.

TIP:
- When the optional sensor unit is connected, the monitor's remote control sensor is disabled.
- For the remote control, please use the Remote control unit included with this monitor.

❺ HDMI 1/2 input terminal (HDMI1 (ARC)/HDMI2)

HDMI signals input.

HDMI1 (ARC):

Also supports ARC (Audio Return Channel) for audio output.

ARC sends the monitor's sound to audio equipment with an HDMI1 (ARC) terminal.

HDMI2:

TIP:
- Use the included ARC-supported HDMI cable. The audio equipment will output the monitor's audio. The audio equipment can be controlled with the included Remote control unit.
- Please use an HDMI cable with the HDMI logo. When the input signal is 4K, please use high-speed HDMI cable.
- Some HDMI cables and devices may not show an image correctly due to different HDMI specifications.
- This monitor supports HDCP (High-bandwidth Digital Contents Protection) coding. HDCP is a system for preventing illegal copying of video data sent over a digital signal. If you are unable to view material via the digital inputs, this does not necessarily mean that the monitor is not functioning properly.
- Compatible signal list is on the page 89.

❻ HDMI output terminal

Output signal from HDMI2 or Raspberry Pi Compute Module Slot or Option Board Slot.

❼ DisplayPort input terminal

DisplayPort signals input.

❽ DisplayPort output terminal

Output signal from DisplayPort or USB Type-C1 (upstream).

❾ USB Type-C1 (upstream) port

Power supply: 5 V/3 A, 9 V/3 A, 12 V/3 A, 15 V/3 A,
20 V/ 3.25 A
(5 V/3 A when an Option Board is connected)

Check the shape of the ports when connecting a USB cable. When supplying power via the USB Type-C port, use a USB cable supporting 3.25 A.

You can connect a device that supports DisplayPort alternate mode. If you connect a device that does not support DisplayPort alternate mode, this port works as a USB hub. In order to supply power to connected devices, it is necessary to support the Power delivery standard.

NOTE: Do not bind the USB cable. It may trap heat and cause a fire.

TIP: The Power Delivery function is not guaranteed to work with all devices. Please check the connected device's user manual and specifications for its power capabilities and requirements.

❿ USB Type-A port

USB 2.0/USB 3.2 Gen1 compliant.

A computer connected to the USB Type-C1 port can be controlled by the external devices via this port.

This connection can also be used by external USB devices (such as cameras, flash memory, keyboards, etc.).

NOTE:
- Please make sure the connector shape and orientation is correctly aligned when connecting the USB device or cable.
- Connecting/disconnecting a USB flash drive with the monitor already powered on is not recommended. To prevent damage to the monitor and possible corruption of the connected device's data files, the monitor's main power switch should be off before making connections or disconnections.

TIP:
- Format a USB flash drive in the FAT32 format. Refer to the computer's instruction user's manual or Help file on how to format a USB flash drive. If the monitor does not recognize a connected USB flash drive, make sure the file structure is FAT32.
- The monitor is not guaranteed to work with all USB flash drives sold commercially.

⓫ USB Type-C2 (downstream) port

USB 2.0/USB 3.2 Gen1 compliant.

A computer connected to the USB Type-C1 port can be controlled by the external devices via this port.

This connection can also be used by external USB devices (such as cameras, flash memory, keyboards, etc.).

NOTE:
- Please make sure the connector shape and orientation is correctly aligned when connecting the USB device or cable.
- Connecting/disconnecting a USB flash drive with the monitor already powered on is not recommended. To prevent damage to the monitor and possible corruption of the connected device's data files, the monitor's main power switch should be off before making connections or disconnections.

TIP:
- Format a USB flash drive in the FAT32 format. Refer to the computer's instruction user's manual or Help file on how to format a USB flash drive. If the monitor does not recognize a connected USB flash drive, make sure the file structure is FAT32.
- The monitor is not guaranteed to work with all USB flash drives sold commercially.

Connecting Peripheral Equipment

⓬ RS-232C input terminal (D-Sub 9-pin)

Connect RS-232C input from external equipment, such as a computer, in order to control RS-232C functions. See page 67.

⓭ Raspberry Pi Compute Module Slot/ Option Board Slot

Raspberry Pi Compute Module Slot:

Slot for installing a Raspberry Pi Compute Module Interface Board and Raspberry Pi Compute Module. See page 94.

Installation must be performed by a qualified technician. Do not attempt to install a Compute Module Interface Board and Raspberry Pi Compute Module by yourself.

Option Board Slot:

Slot for installation of an Intel® SDM.

TIP: Please contact your supplier for a list of compatible Option Boards.

To maintain compliance with EMC regulations, use shielded cables to connect to the following terminals: HDMI input terminal, DisplayPort input terminal, USB Type-C1 (upstream) port, USB Type-C2 (downstream) port, RS-232C input terminal. Use shielded cables with ferrite core to connect to the following terminals: USB Type-A port.

TIP:
- Do not connect or disconnect cables when turning on the monitor's main power or other external equipment's power as this may result in loss of image.
- Do not use an attenuating (built-in resistor) audio cable. Using an audio cable with a built-in resistor will lower the sound level.

Connecting the Power Cord

1. **Plug the power cord (supplied) into the AC input terminal.**
2. **Plug the power cord (supplied) into the power outlet.**
3. **Clamp the power cord (supplied) by using the supplied cable clamp.**

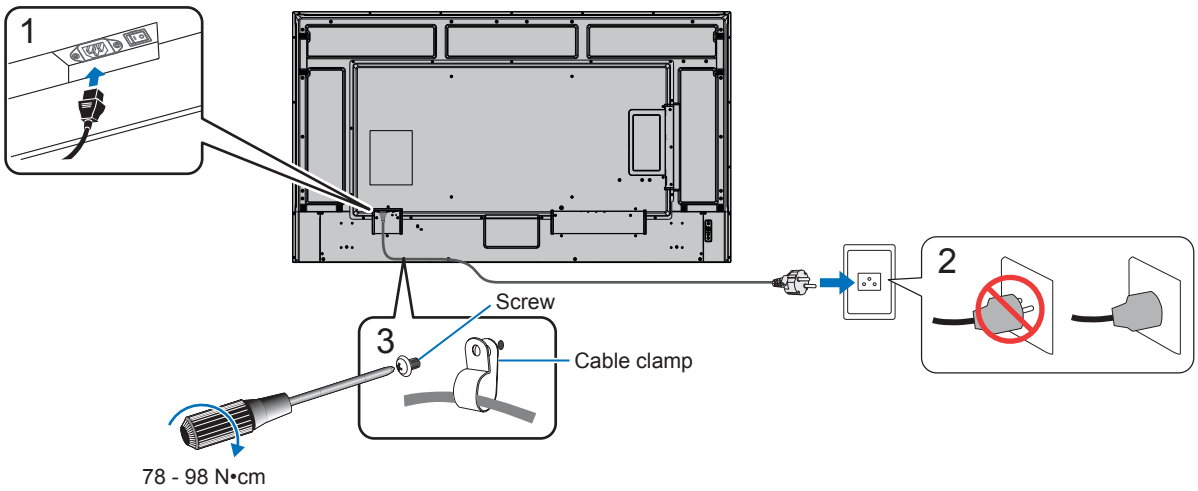

NOTE:
- Use only the power cord supplied with the monitor.
- When connecting the power cord to the product's AC input terminal, make sure the connector is fully and firmly inserted.
- Please make sure that enough power is supplied to the monitor. Please refer to the "Power requirement" in the specification (See "Product Specifications" on page 90).
- Be sure to clamp the power cord (supplied) by using the supplied cable clamp. When clamping the power cord, take care not to stress the terminal of the power cord. Do not bend the power cord excessively.

Preparing the Remote Control Unit

Installing the batteries

The Remote control unit is powered by two 1.5 V AAA batteries.

To install or replace batteries:

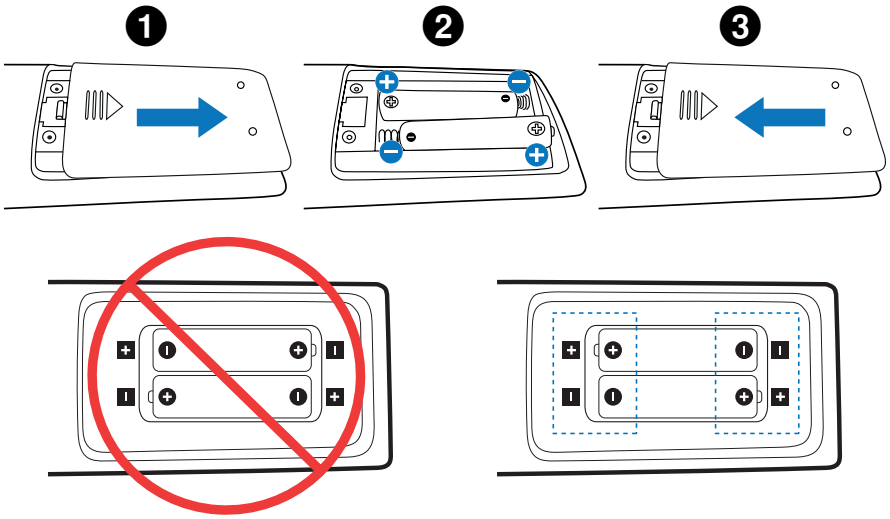

NOTE:
- If you do not intend to use the Remote control unit for a long period of time, remove the batteries.
- Use manganese or alkaline batteries only.

Remote control operation range

Point the top of the Remote control unit toward the monitor's remote control sensor during button operation.

Use the Remote control unit within a distance of about 7 m (23 ft.) from the remote control sensor, or at a horizontal and vertical angle of within 30° and within a distance of about 3.5 m (10 ft.).

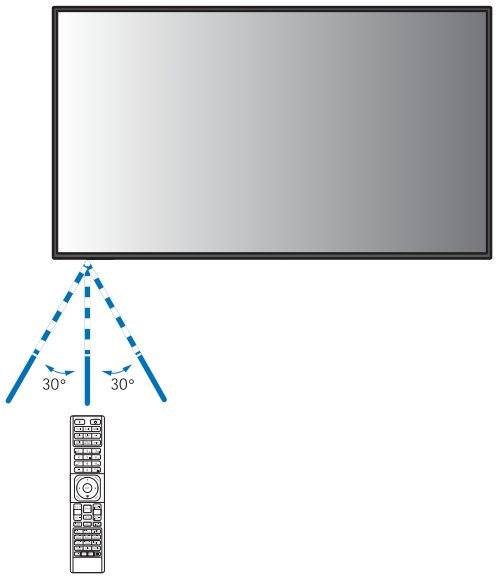

Handling the Remote control unit

- Do not expose to strong shock.
- Do not allow water or other liquid to splash on the Remote control unit. If the Remote control unit gets wet, wipe it dry immediately.
- Avoid exposure to heat and steam.
- Except to install the batteries, do not open the Remote control unit.

NOTE: If the Remote control unit is not functioning, please check below:
- The batteries may be drained. Please change the batteries, then check if the Remote control unit works.
- Check that the batteries are inserted correctly.
- Check that the Remote control unit is pointing at the remote control sensor of the monitor.
- Check the status of [LOCK SETTINGS]. See page 60.
- The remote control system may not function when direct sunlight or strong illumination strikes the remote control sensor of the monitor, or when there is an object in the path.

Turning Power On/Off

Turning on the main power

Make sure that the main power switch is turned on (|).

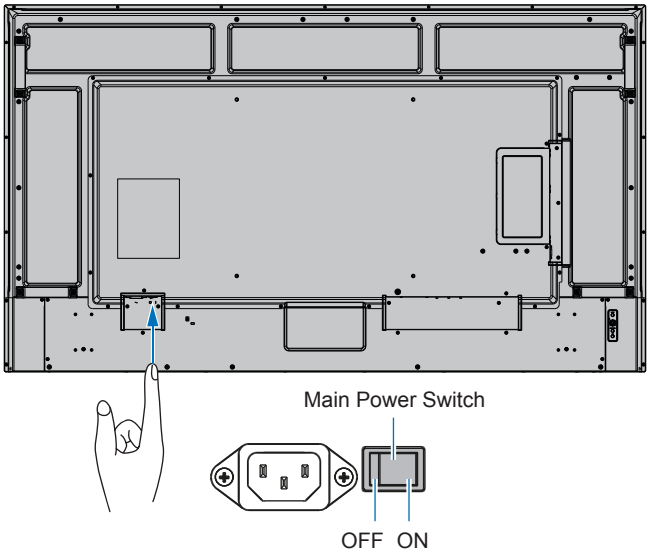

Turning power on

1. Press the POWER button or MONITOR ON button to turn the power ON.

The Main Power switch must be in the ON position in order to power up the monitor using the POWER button on the Remote control unit or on the monitor.

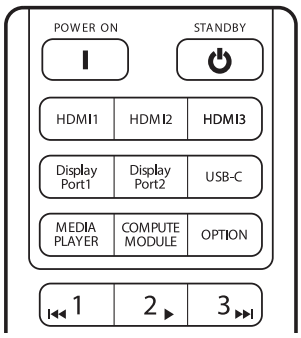

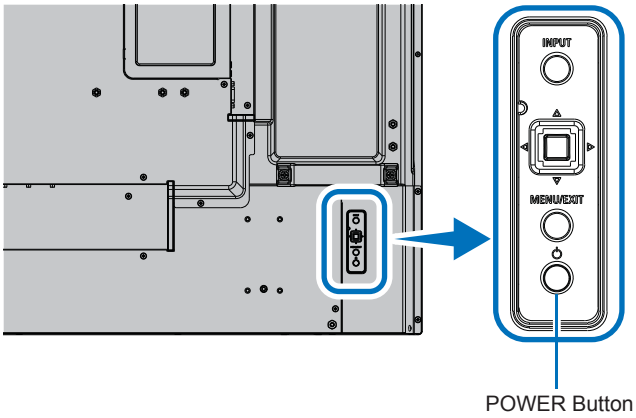

■Operations after first power-on

When you turn on the power for the first time, the initial setting screen appears. Navigate the cursor to [Start] using the ▲/▼ buttons on the Remote control unit and press the SET button to start. Configure the initial settings, such as setting the language, date and time, etc.

Turning power off

1. **Press the POWER button again on the monitor or press the STANDBY button on the Remote control unit. The power is turned off. (Standby state)**

Power ON and OFF

Press the Power button on the monitor or on the Remote control unit to turn on the monitor.

The monitor's power LED indicates the current status of the monitor. Please refer to the following table for information about the power LED.

Power LED lighting pattern	Status of the monitor	Recovery
Glowing blue	Normal	1. Turn on the monitor by the Remote control unit or the monitor button. 2. Send an AV signal input to the monitor.
Blinking green*2	Under any of the conditions below, no input signal has been detected by the monitor during the period of time*1 you set: • An optional sensor unit is not connected to the REMOTE input terminal or [HUMAN SENSING] is set to [DISABLE]. • [INPUT SELECT] is set to [HDMI2] and an HDMI cable is connected to HDMI2 terminal. • [SLOT POWER] is [ON] or [AUTO] then an Option Board is connected. • [AUTO INPUT CHANGE] is set to a setting except for [NONE]. • [USB POWER] is set to [ON]. • [SLOT POWER] is set to [ON]. • [POWER CONTROL LINK] of [CEC] is set to [ENABLE]. • [DisplayPort VERSION] is set to [1.2 MST] or [1.4 MST]. • [QUICK START] is [ENABLE].	
Glowing amber*2 (Networked standby mode)	• When 20 sec*3 have passed without meeting the conditions of blinking green, when the monitor recognizes the LAN connection and a certain period of time has passed without selected signal input.	
Blinking amber*2 (Standby mode)	• When 3.5 min have passed without the conditions of blinking amber, when a certain period of time has passed without the monitor recognizing the LAN connection and selecting the signal input.	
Glowing red	Turn off the monitor by the Remote control unit or the monitor button.	Turn on the monitor by the Remote control unit or the monitor button.

*1: Time setting for auto power save is available at [POWER SAVE SETTINGS] (See page 45).
*2: [POWER SAVE] is set to [ENABLE].
*3: 90 sec if [INPUT SELECT] is set to [HDMI2] without connecting an HDMI cable to HDMI2 terminal.
3 min if [INPUT SELECT] is set to [USB-C].

TIP:
- The blue power LED that the monitor is powered on and functioning normally can be turned off in the monitor's OSD menu options. See page 51.
- The power LED blinking green and amber alternately when the [SCHEDULE] function is enabled.
- When the main power switch is turned off while in standby state, the monitor will be in standby mode with a blue blinking power LED when turned on again.
- When the input is USB-C, if the Power LED is glowing or blinking amber, an image cannot be shown even if inputs an input signal. If turning on the monitor by a signal input, set the [QUICK START] to [ENABLE]. If the [QUICK START] is disabled, turn on the monitor by using the remote control unit or the buttons on the monitor.

Turning Power On/Off

NOTE:
- When a component failure is detected within the monitor, the power LED will blink red or blink a combination of red and blue.
- The backlight used for this monitor has a limited life and its brightness decreases with the usage time.
- Do not display a still picture for a long period, as this could cause a residual image.

  To avoid shortening this monitor's lifetime, please note the following:
  - Turn off the monitor's main power switch when not in use.
  - Use the Power button on the monitor or the STANDBY button on the Remote control unit to put the unit in standby state.
  - Use [POWER SAVE SETTINGS] in the [PROTECT] OSD menu. When there is no input signal the monitor will automatically switch to power save mode.
  - Use [SCHEDULE] in the OSD menu to automatically control the monitor's on and standby power states as required. When using the schedule function, set [DATE & TIME] in the [SYSTEM] OSD menu.

Using Power Management

This function decreases the power consumption of the monitor when it is not in use.

When connected to a computer, power consumption by the monitor reduces automatically if the keyboard or mouse are not used during the time set in the computer's power management settings. Refer to your computer's user manual for more information.

When connected to an AV source, such as a Blu-ray, DVD, or streaming video player, power consumption by the monitor reduces automatically after a certain amount of time has passed since the monitor recognized "no signal input". This option is turned on or off in the [POWER SAVE] settings in [POWER SAVE SETTINGS] menu of the OSD. See page 45.

TIP:
- Depending on the computer and display card used, this function may not operate.
- After the video signal is lost, the monitor automatically turns off after a preset time period. Please refer to the [TIME SETTING] in [POWER SAVE SETTINGS]. See page 45.
- Schedules can be created for the monitor to power on or standby state at specific times. See page 53.
- Please refer to the [POWER SAVE] in [POWER SAVE SETTINGS] for the power management function.

Basic Operation

Using the button and key

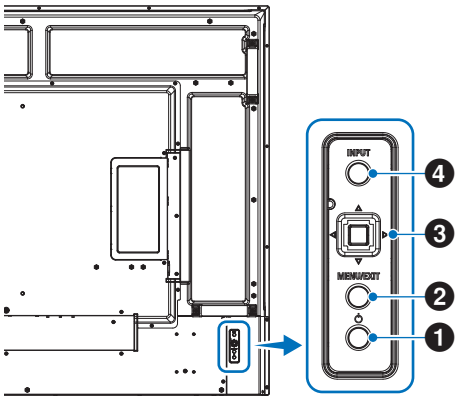

❶ Power Button

Switches between power on and standby state.

❷ MENU/EXIT Button

- Opens the OSD menu when the OSD menu is closed.
- Acts as a back button within the OSD menu to move to the previous OSD menu.
- Acts as an exit button to close the OSD menu when on the main menu.

❸ Joystick Key/SET Button*3

◁/▷: Left/Right control.

- Navigates to the left or right through the OSD Control menus.
- Increases or decreases adjustments for individual OSD settings.
- Directly adjusts the VOLUME when the OSD menu is closed.

▽/△: Up/Down control.

- Navigates up or down through the OSD Control menus.

SET: (button press)

- Selects, or sets the setting for, the highlighted function in the OSD menu.

*3: The ◁, ▷, △ and ▽ functions change according to the monitor orientation (landscape/portrait).

❹ INPUT Button

INPUT: Cycles through the available inputs when the OSD menu is closed.

[DisplayPort], [USB-C], [HDMI1], [HDMI2], [OPTION]*1, [COMPUTE MODULE]*2. Input names are shown as their factory preset name.

*1: This function depends on which Option Board is installed in the monitor.

*2: This input is available when the optional Raspberry Pi Compute Module Interface Board and Raspberry Pi Compute Module are installed. See page 94.

Using the remote control unit

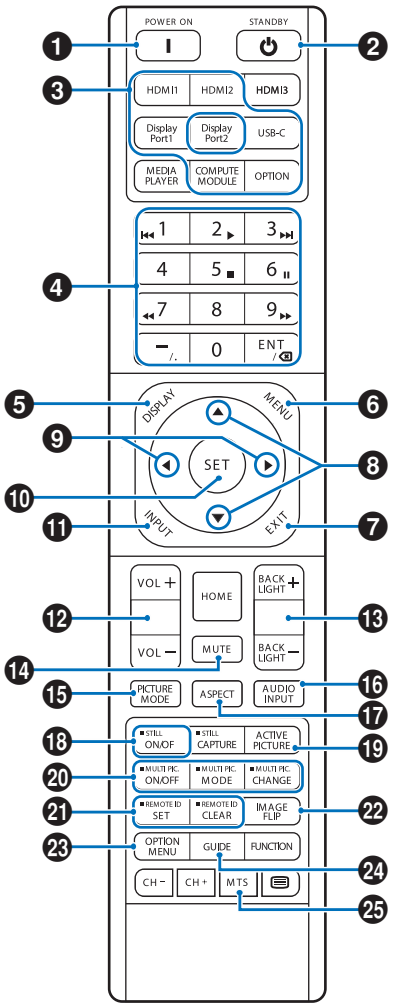

TIP:

- The buttons with no explanation are not used with your monitor model.
- Some Remote control unit buttons are used for CEC (Consumer Electronics Control). See page 33.
- Unlocks the Remote control unit's buttons if they have been locked in the [LOCK SETTINGS] in the [PROTECT] menu.
  Press and hold the DISPLAY button for more than five seconds to unlock the remote.
  See page 60.

❶ POWER

POWER resumes full power from low power mode.

❷ STANDBY

STANDBY puts the monitor in low power mode.
See page 23.

❸ DIRECT INPUT

Immediately changes the input to the one named on the button.

The button names reflect the factory preset name for the input.

TIP: • Pressing USB-C, switches input to USB Type-C1 (Upstream) port.

❹ Numeric input Buttons

Press the buttons to set and change passwords in [SECURITY SETTINGS], IP address, the channel, and set the REMOTE ID. See page 62.

Some buttons are used for the CEC.

❺ DISPLAY

Shows/Hides the information OSD.

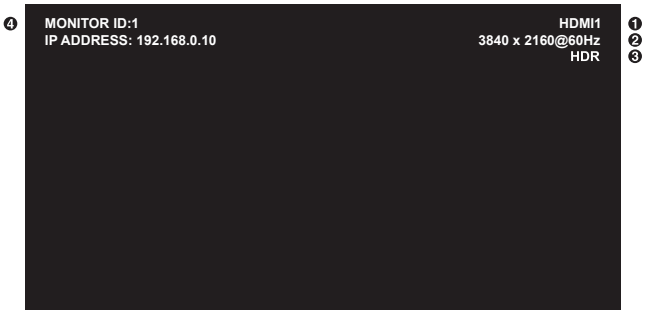

① Input name

② Input Signal Information

③ HDR Information

④ Communication Info*

* Shows when [COMMUNICATION INFORMATION] is checked.
White: Connected LAN.
Red: Not connected LAN.

❻ MENU

Opens and closes the OSD menu. See page 30.

❼ EXIT

Acts as a back button within the OSD to move to the previous OSD menu.

Acts as an EXIT button to close the OSD menu when on the main menu.

❽ ▲/▼ (up/down)

Acts as navigation buttons to move the highlighted area up or down.

❾ ◀/▶ (left/right)

Acts as navigation buttons to move the highlighted area left or right.

Increases or decreases the adjustment level within the selected OSD menu setting.

❿ SET

When the OSD menu is open, this button acts as a set button when you make a selection.

⓫ INPUT

Opens and closes the INPUT menu.

The input names reflect the factory preset name for the input unless they are manually renamed in the OSD menu.

⓬ VOL +/–

Increases or decreases the audio output level.

⓭ BACKLIGHT +/–

Adjusts the overall image and background brightness.

⓮ MUTE

Mutes the monitor's audio and video output.

Press it again to unmute the monitor's audio and video output. See "MUTE SETTING" on page 51 for details.

⓯ PICTURE MODE

Cycles through the picture modes [NATIVE], [RETAIL], [CONFERENCING], [HIGHBRIGHT], [TRANSPORTATION] and [CUSTOM]. See page 33.

PICTURE MODE	PURPOSE
NATIVE	Standard setting.
RETAIL	Bright, vivid colors ideal for advertising and branding.
CONFERENCING	Lower color temperature and optimized for natural human complexions.
HIGHBRIGHT	Maximum backlight brightness with higher color temperature for brighter ambient environments.
TRANSPORTATION	Maximum backlight brightness with high contrast to read text under all conditions.
CUSTOM	Custom setting.

TIP: • Changing any of the settings of the [PICTURE MODE] in the OSD menu will change the settings for the current input only.

⑯ AUDIO INPUT

This function is not available.

⑰ ASPECT

Cycles through the picture aspect ratios [FULL], [WIDE], [1:1], [ZOOM] and [NORMAL]. See page 28.

⑱ STILL

ON/OFF: Activates/deactivates still picture mode.

NOTE:
- If signal frequency of the input signal is 50 Hz or 60 Hz, this function is disable.
- This function is released if any following functions is changed: [ASPECT], [MULTI PICTURE], [TILE MATRIX], [IMAGE FLIP], [OVERSCAN], if the input signal changes.
- This function is disabled when one of the following functions is active: [MULTI PICTURE], [TILE MATRIX], [IMAGE FLIP], [ROTATE].
- If the input signal is [OPTION], this button's action depends on which Option Board is installed in the monitor.

⑲ ACTIVE PICTURE

Selects the active picture when Multi Picture Mode is enabled. See page 39.

⑳ MULTI PICTURE

ON/OFF: Turns Multi Picture Mode on and off.

MODE: Switches between the available Picture-In-Picture (PIP) and Picture-By-Picture (PBP) modes.

CHANGE: Swaps the selected inputs between Picture 1 and Picture 2 when PIP is set. See page 39.

TIP: If you press SET button while Multi Picture is on, you can change the active picture's picture size.

㉑ REMOTE ID

Activates the REMOTE ID function. See page 62.

㉒ IMAGE FLIP

Cycles through the image flip modes [NONE], [H FLIP], [V FLIP], and [180° ROTATE]. See page 38.

㉓ OPTION MENU

Compatible with specific Option Boards. The functionality varies depending on the Option Board installed in the monitor.

㉔ GUIDE

Compatible with specific Option Boards. The functionality varies depending on the Option Board installed in the monitor.

㉕ MTS

Compatible with specific Option Boards. The functionality varies depending on the Option Board installed in the monitor.

■Setting the Aspect Ratio

Press the ASPECT button on the Remote control unit to cycle through the options available for the current input signal.

For DisplayPort, USB-C

- [FULL] ➔ [1:1] ➔ [ZOOM] ➔ [NORMAL]

For HDMI1, HDMI2, OPTION (TMDS)*1, COMPUTE MODULE*2

- [FULL] ➔ [WIDE] ➔ [1:1] ➔ [ZOOM] ➔ [NORMAL]

*1: This function depends on which Option Board is installed in the monitor.
*2: This input is available when the optional Raspberry Pi Compute Module Interface Board and Raspberry Pi Compute Module are installed.

Aspect ratio of image	Unchanged view*3	Recommended selection for picture aspect*3		Description
4:3	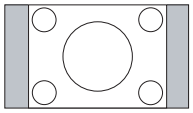	[Normal]	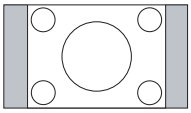	Reproduces the aspect ratio that is sent from the source.
Squeeze	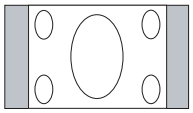	[Full]	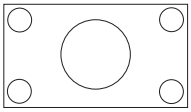	Fills the entire screen.
Letterbox	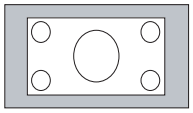	[Wide]	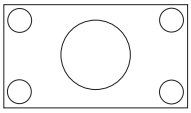	Expands a 16:9 letter box signal to fill the entire screen.

*3: Gray areas indicate unused portions of the screen.

[1:1]: Shows the image in a 1 by 1 pixel format.

[ZOOM]: The zoom function increases the image size, which expands the image beyond the active screen area. The parts of the image outside the active screen area are not shown.

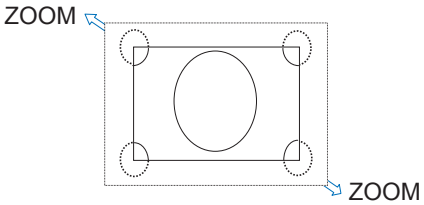

Menu Items

Opening the menu window

The monitor's menu allows you to directly adjust its various settings, including brightness, contrast, color adjustments, input, and more. This section explains how to navigate the menu and make selections.
For descriptions of the menu items for this product, see page 30.

■Menu screen

NOTE: Some menus may not be available depending on the model or optional equipment.

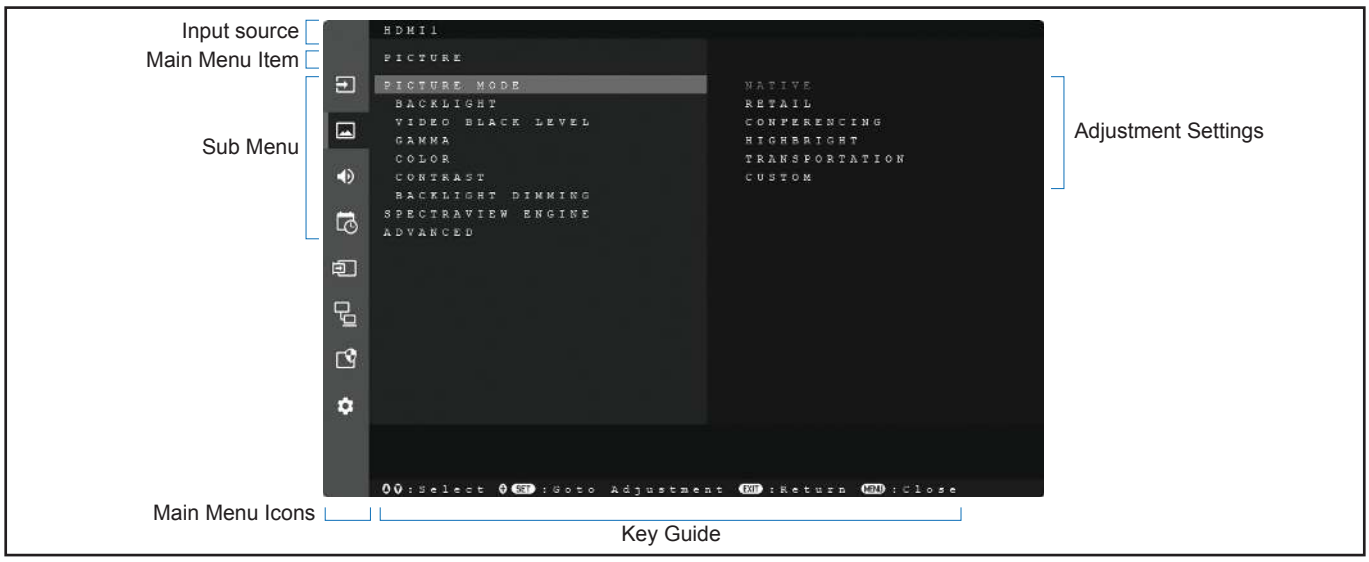

■Example of an operation

Navigating the menu for selecting the PICTURE MODE.

1. Press the MENU button to open the menu screen.

2. Press the ▲ or ▼ button to select the PICTURE icon, and press the SET button.

3. **Press the ▲ or ▼ button to select [PICTURE MODE], and press the SET button.**

4. **Press the ► button to select [NATIVE], and press the SET button.**
5. **Press the MENU button to close the menu screen.**

TIP: • The menu screen will close automatically if no operation is performed for about three minutes.

Menu item details

The settings below are recommended settings and conform to the “Normal Configuration” as defined in the EcoDesign Regulation (2019/2021).

- [POWER SAVE] is set to [ENABLE].
- [USB-POWER] is set to [AUTO].
- [POWER SAVE MESSAGE] is set to [ON].
- [QUICK START] is set to [DISABLE].
- [HUMAN SENSING] is set to [DISABLE].

Due to the various possibilities to save energy, the different power modes are named as “standby state”.
“Standby state” means “standby mode” or “networked standby mode” if the recommended settings are used.
The monitor enters into “standby mode” if you use the recommended setting and haven’t connected a LAN network. Using the recommended setting with an active LAN connection, “standby state” means “networked standby mode”.

■INPUT

INPUT SELECT

Selects the input signals source.
DisplayPort, USB-C, HDMI1, HDMI2, COMPUTE MODULE*1 or OPTION*2.

INPUT SETTINGS

INPUT NAME

Custom names with a maximum of 14 characters, including spaces, can be set. The characters can be a mix of letters (A-Z), numbers (0-9), and some symbols.

To rename the input:

1. **Highlight the name field. Press SET on the Remote control unit to activate the field.**
2. **Use the ◄/► buttons to navigate to the character you want to change.**
   Press the ▲/▼ buttons to cycle through the available characters (A-Z, 0-9, special characters, and space).
3. **Press the SET button when on a letter to switch between uppercase and lowercase.**
4. **Press EXIT to save the name and exit the name field.**

TIP: The INPUT NAME can be easily changed with the HTTP server (see page 71).

NAME RESET

Returns the current input name to its factory default. Highlight [PROCEED] and press SET on the Remote control unit to reset the input name.

AUTO INPUT CHANGE*3

This function automatically selects the input terminal with an input signal.

When enabled, this option can detect and change inputs when a signal is applied or lost. Allows for customization of the input priority.

TIP: When [HUMAN SENSING] is enabled, this function is deactivated.

NONE ..... The monitor does not search for video signal on the other input connections.
If video signal is lost on the current input, or if the monitor is manually switched to an input that does not have video signal, the screen will go black. If [POWER SAVE] is enabled, the monitor will enter power saving mode after the period of time set for [POWER SAVE] has passed.

FIRST DETECT..... The monitor does not search for a video signal on the other input connections while the current input has a video signal.
If the current input connection does not have video signal present, the monitor will search for video signal on the other video input connections. If a video signal is found, the monitor will switch from the current input to the input with the active video source automatically.

LAST DETECT ..... The monitor actively searches for a video signal on the other input connections, even while the current video signal is present. When a new video signal source is applied to another input connection, the monitor automatically switches to the newly found video source.
If the video signal is lost on the current input connection, the monitor will search for video signal on the other video input connections. If a video signal is found, the monitor will switch from the current input to the input with the active video source automatically.

CUSTOM DETECT..... The monitor only searches for video signal on the inputs selected for the priority numbers. If the signal is lost, the monitor searches for signal in the priority order and automatically switches to the highest priority input it finds with an active video signal. The monitor actively searches these inputs. If the current signal input is not Priority 1 and a new signal is applied to the input assigned to Priority 1, the monitor will automatically switch to the higher priority input.

TIP: If you select [CUSTOM DETECT], you cannot switch to an input signal for which [PRIORITY] has not been set.

INPUT SIGNAL INFORMATION

Shows input signal information.

CURRENT INPUT

These functions show their current settings in the [INPUT SIGNAL INFORMATION] for the selected input signal.

TIP: The functions listed here do not have settings for all input terminals available.

RESOLUTION

FREQUENCY

COLOR FORMAT

HDR EOTF

COLOR DEPTH

HDCP

VIDEO RANGE

VIDEO ID CODE

OVERSCAN

ADVANCED

INPUT SIGNAL SETTINGS

Configure settings specific to the video input terminal.

DisplayPort (DisplayPort, USB-C inputs only)

DisplayPort VERSION

The following settings can be made according to the input selection.
DisplayPort VERSION: 1.1a, 1.2, 1.4
Select [SST] or [MST] when [1.2] or [1.4] is set.

TIP:
- [1.2] is only available if [USB-C SETTING] in [USB] is set to [USB3.2].
- The input signal resolution of 4096 x 2160 can be selected only when [DisplayPort VERSION] is set to [1.4].

HDCP VERSION

Depending on the selection in the [DisplayPort VERSION], set items as below.
1.2: HDCP 1.3, HDCP 2.2
1.4: HDCP 1.3, HDCP 2.2

TIP: When [DisplayPort VERSION] is set [1.1a], this function set [HDCP1.3] automatically.

HDR

Depending on the selection in the [DisplayPort VERSION], set items as below.
1.2: ENABLE, DISABLE
1.4: ENABLE, DISABLE

TIP: When [DisplayPort VERSION] is set [1.1a], this function is disabled.

HDMI (HDMI1, HDMI2, OPTION (TMDS)*2 inputs only)

HDMI MODE

Selects the type of HDMI mode (version) [MODE1] or [MODE2].
MODE1: Max resolution is 4096 x 2160 (30 Hz).
MODE2: Max resolution is 4096 x 2160 (60 Hz).

TIP: If enable HDR or set [HDCP2.2] in [HDCP VERSION], select [MODE2].

HDCP VERSION

Select [HDCP 1.4] or [HDCP 2.2].

HDR

Selects HDR [ENABLE] or [DISABLE].

TIP: When [HDMI MODE] is set [MODE1], HDR is disabled.

SIGNAL FORMAT

OVERSCAN (HDMI1, HDMI2, OPTION (TMDS)*2, COMPUTE MODULE*1 inputs only)

ON: The image is scaled to best fit the screen without changing the aspect ratio. Some images will have cropped edges. Approximately 95 % of the image will be shown on the screen.
OFF: The whole image is shown within the screen area. This setting may cause a distorted image at the edges.
AUTO: Image size is set automatically.

TIP: When you use a computer with HDMI out, please set [OFF].

VIDEO RANGE

Adjust the gradation range to be shown according to the video signal to improve the whiteout and blackout of the image.
FULL: For computer settings. Show all input signals of 0-255 gray levels.
LIMITED: For audio-visual equipment settings. Expands the input signals from 16-235 gray levels to 0-255 gray levels.
AUTO: Automatically sets input signals by detecting connected equipment.

COLORIMETRY

Selects the color space setting from AUTO, RGB, YCbCr (BT.601), YCbCr (BT.709), YCbCr (BT.2020).

CEC

Provides CEC (Consumer Electronics Control) compatible media players, connected via HDMI, the ability to communicate and allows limited control between the device and the monitor. Only available for HDMI inputs.

CEC

When [MODE1] or [MODE2] is selected, the following functions are automatically activated:

Also, when the compatible device is started from a standby state, this unit also works together to turn on the power from a standby state.

- When a connected CEC media device plays, the monitor will turn on and/or change to the HDMI input with the connected media device.
- The monitor's Remote control unit can be used to control some of the media player device functions.

When [MODE1] is selected, the Remote control unit CEC functions are:
1, 2, 3, 5, 6, 7, 9, ENT, EXIT, ▲, ▼, ◀, ▶, MUTE, VOL+, VOL–.

When [MODE2] is selected, the Remote control unit CEC functions are:
0 to 9 and – on the keypad, ENT, EXIT, ▲, ▼, ◀, ▶, GUIDE, MUTE, SET, VOL+, VOL–, CH–, CH+.

Depending on the type of the connected device, the CEC functions may not work as described.

Not all manufacturers provide the same level of CEC integration and control, or they may only provide support for their products.

POWER CONTROL LINK

The HDMI-CEC compatible device goes into standby at the same time as the monitor when the STANDBY button is pressed on the Remote control unit, or when the Power button is pressed on the monitor.

TIP: The connected HDMI-CEC compatible device may not go into standby if it is recording.

AUDIO RECEIVER

ENABLE: The monitor's internal speaker is muted and connected audio equipment with ARC function outputs the sound.

DISABLE: Connected audio equipment with ARC function is muted and the monitor's internal speaker outputs the sound.

TIP: It may take a while to output the sound when changing [AUDIO RECEIVER] settings, but this is not a failure of the monitor.

BACKGROUND COLOR

Adjusts the color of the borders that show when an image does not fill the entire screen.

For example, these borders are seen when a 4:3 image is shown or when a picture-by-picture option in [MULTI PICTURE MODE] is on and the inputs do not entirely fill the screen.

Press the ▶ button to make the borders lighter, the level can be increased until the color is white.

Press the ◀ button to make the borders darker, the level can be decreased until the color is black.

RESET

Resets all INPUT settings back to factory settings except for [INPUT SELECT], [INPUT NAME], and [PRIORITY] in [AUTO INPUT CHANGE].

*1: This function is only available when the optional Raspberry Pi Compute Module Interface Board and Raspberry Pi Compute Module are installed. See page 94.
*2: This function depends on which Option Board you are using. This function is only available when an Option Board is installed.
*3: Depending on the device, it may not be detected correctly.

■PICTURE

PICTURE MODE (When [SPECTRAVIEW ENGINE] is set to [OFF])

Provides pre-configured picture settings suitable for various environments where this device may be used, or customize settings to viewer preference. See page 34.

BACKLIGHT

Adjusts the overall image and background brightness. Press ◀ or ▶ to adjust.

TIP: [ON] is selected in [AMBIENT LIGHT SENSING] at [ADVANCED], this function cannot be changed.

VIDEO BLACK LEVEL

Adjusts the black luminance.

GAMMA

NATIVE ..... Gamma correction is handled by the LCD panel.
2.2 ..... Typical monitor gamma for use with a computer.
2.4 ..... Typical gamma settings for use with videos, such as DVDs and Blu-rays.
S GAMMA ..... Special gamma for certain types of movies. Raises the light parts and lowers the dark parts of the image (S-Curve).
DICOM SIM. ..... DICOM GSDF curve simulated for LCD type.
HDR-ST2084 (PQ) ..... Gamma setting for HDR, typically for UHD disk media and streaming videos.
HDR-HYBRID LOG ..... Gamma setting for HDR, typically for UHD broadcasting.
PROGRAMMABLE1, 2, 3 ..... A programmable gamma curve can be loaded using our optional software.
AUTO HDR SELECT (HDMI input only) ... GAMMA correction of HDR signal automatically changes to [HDR-ST2084 (PQ)] or [HDR-HYBRID LOG].

COLOR

COLOR ..... Adjusts the color saturation of the screen. Press ◀ or ▶ button to adjust.

COLOR TEMP ..... Adjusts the color temperature of the entire screen. A low color temperature will result in a reddish screen. A high color temperature will make the screen bluish.

Adjusting the slider one-step past the highest temperature shown enables [NATIVE], which initiates the panel's default white color without temperature adjustment.

If TEMPERATURE needs further adjustment, the individual R/G/B GAIN levels of the white point can be adjusted. Use the sliders for the individual R/G/B GAIN levels to adjust the color temperature. Note that the [COLOR TEMP] setting will change to [CUSTOM] when one of the GAIN level sliders is adjusted.

TIP: When [PROGRAMMABLE1], [PROGRAMMABLE2] or [PROGRAMMABLE3] is selected in [GAMMA CORRECTION], this function cannot be changed.

COLOR CONTROL ..... Adjusts the hue of the Red, Yellow, Green, Cyan, Blue and Magenta colors individually. For example, you can change red to yellow or purple.

CONTRAST

Adjusts the image brightness in relationship to the input signal. Press ◀ or ▶ button to adjust.

BACKLIGHT DIMMING

Automatically adjusts each of the clusters of the backlight of the LCD independently, according to the input signal.

TIP:
- If [AUTO BRIGHTNESS] is set to [MODE 2], this function cannot be changed to [OFF].
- At the time of shipment from the factory, this function is grayed out and [OFF] cannot be set. To turn it off, set [AUTO BRIGHTNESS] to something other than [MODE2].

PICTURE MODE (When [SPECTRAVIEW ENGINE] is set to [ON])

Provides pre-configured picture settings suitable for various environments where this device may be used, or customize settings to viewer preference.

PICTURE MODE

Five customizable Picture Mode memories [1], [2], [3], [4] or [5]. See page 54.

EMULATION

COLOR VISION EMU.

Previews various typical human vision deficiencies and is useful for evaluating how people who have such deficiencies will perceive colors.

This preview is available in types:

P (Protanopia)
D (Deuteranopia)
T (Tritanopia)

Grayscale can be used for evaluating contrast legibility.

TIP: Depending on the vision of the user, including those with color vision deficiency, there will be a variation in how the screen's color is seen and experienced. A simulation is used to illustrate the view of those with a color vision deficiency. It is not their actual view. The simulation is a reproduction of those with a strong color vision mode of type P, type D or type T. People with a slight color vision deficiency will experience little to no difference compared to those with normal color vision.

6 AXIS COLOR TRIM

With these controls, the standard color circle is divided into 6 separate ranges/areas: Reds, Yellows, Greens, Cyans, Blues, and Magentas. Each range can be individually adjusted in Hue, Saturation, and Offset (Brightness) for specific matching purposes. Neutral colors (grays) will not be impacted.

RED (HUE/SAT./OFFSET)

YELLOW (HUE/SAT./OFFSET)

GREEN (HUE/SAT./OFFSET)

CYAN (HUE/SAT./OFFSET)

BLUE (HUE/SAT./OFFSET)

MAGENTA (HUE/SAT./OFFSET)

HUE:	Changes the actual color within its range on the color wheel without changing the saturation and offset. For example, the Red color range shifts reds towards Yellow or Magenta, the Yellow color range shifts yellows towards Red or Green, and so on.
SAT. (Saturation):	Changes the intensity of the color range without changing the hue and offset.
OFFSET:	Changes the brightness of the color range without changing the hue and saturation.

e.g.: This is the color changes when Red color set to minimum value and maximum value at HUE/SAT./OFFSET.

	Minimum value	0	Maximum value
Default			
HUE	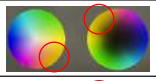		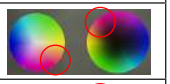
SAT.	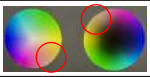		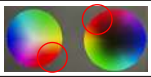
OFFSET	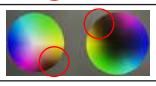		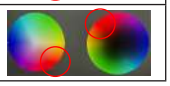

UNIFORMITY

This function improves the color reproduction and evens out the non-uniformity in luminance of the monitor.

TIP: A higher number produces a better effect, but may also affect power consumption and lifetime of the monitor.

BACKLIGHT DIMMING (When [SPECTRAVIEW ENGINE] is set to [ON])

Automatically adjusts each of the clusters of the backlight of the LCD independently, according to the input signal.

SPECTRAVIEW ENGINE

SPECTRAVIEW ENGINE

Select [ON] to activate [SPECTRAVIEW ENGINE] (see page 54).

NUMBER OF PICT. MODES

Limits the number of selectable Picture Modes.

Limiting the number of selectable Picture Modes can be used for the following purposes:

- Locking.
  By setting to [1], it will prevent other Picture Modes from being accessed and adjusted.
- Skip.
  If there are unused Picture Modes that aren't needed, they can be skipped when using the Picture Mode button on the Remote control unit to toggle modes. For example, if [3] is set for [NUMBER OF PICT. MODES], the available picture modes are [1, 2, 3] and the other modes will be skipped.

METAMERISM

Improves the white point color matching when the monitor is used side-by-side with a standard gamut display monitor. This feature compensates for the way the human eye perceives colors slightly differently compared to the scientific instrument used to adjust the monitor during calibration. This function should be disabled in color critical applications.

ADVANCED

UHD UPSCALING

Achieves high-definition effect.

SHARPNESS

Adjusts the crispness of the image. Press ◀ or ▶ button to adjust.

ASPECT

Select the aspect ratio of the screen image.

TIP:
- When starting tile matrix in multi-monitor installations, if the [ASPECT] is [ZOOM] it will be changed to [FULL] before tile matrix starts. After tile matrix is complete, the aspect will return to [ZOOM].
- If you change [H POS] and [V POS] settings with a reduced image, the image will not be changed.
- If the [ASPECT] is [ZOOM] while tile matrix is active, when tile matrix is released, the [ASPECT] will be [ZOOM].

NORMAL ..... Shows the aspect ratio as it is sent from the source.
FULL..... Fills the entire screen.
WIDE ..... Expands a 16:9 letterbox signal to fill the entire screen.
1:1..... Shows the image in a 1 by 1 Pixel format. (If the input resolution is higher than the recommended resolution, the image will be scaled down to fit the screen).
ZOOM..... Expands/reduces the image.

TIP:
- The areas of the expanded image that are outside of the active screen area are not shown. The reduced image may have some image degradation.
- If an input signal is 4k50Hz or 4k60Hz, reducing the image is only available.

ZOOM: Maintains the aspect ratio while zooming.
HZOOM: Horizontal zoom value.
VZOOM: Vertical zoom value.
H POS: Horizontal position.
V POS: Vertical position.

ADAPTIVE CONTRAST (HDMI1, HDMI2, OPTION (TMDS)*2, COMPUTE MODULE*1 inputs only)

Sets the level of adjustment for dynamic contrast.
If [HIGH] is set, the image is shown clearly but it makes brightness unstable due to the wide gap in contrast variation.

TIP: When [SPECTRAVIEW ENGINE] is set to [ON], this function is disabled.

UNIFORMITY

This function improves the color reproduction and evens out the non-uniformity in luminance of the monitor.

TIP: When [SPECTRAVIEW ENGINE] is set to [ON], this function is disabled. Instead, [UNIFORMITY] is enabled and saved in the SpectraView [PICTURE MODE] settings. See page 33.

AUTO DIMMING

Adjusts the backlight of the LCD automatically depending on the amount of ambient light.

AUTO BRIGHTNESS .....Adjusts the brightness level according to the input signal.

MODE1: Automatically lower the screen brightness level when the bright areas of the image become larger.
MODE2: Automatically lower the screen brightness level when the dark areas of the image become larger.

TIP:
- [MODE1] is disabled when [AMBIENT LIGHT SENSING] function is set to [ON].
- When [SPECTRAVIEW ENGINE] is set [ON], this function is disabled.

AMBIENT LIGHT SENSING.....The backlight of the LCD panel can be set to increase or decrease depending on the amount of ambient light within the room. If the room is bright, the monitor becomes correspondingly bright.

If the room is dim, then the monitor will dim accordingly. The purpose of this function is to make the viewing experience more comfortable to the eye in a variety of lighting conditions.

The ambient parameter setting:

When [ON] is set, set the [LUMINANCE] and the [BACKLIGHT].

IN BRIGHT: Setting to use in a bright room.
ILLUMINANCE - The illuminance level in a bright room.
BACKLIGHT - The maximum level of backlight in a bright room.

IN DARK: Setting to use in a dim room.
ILLUMINANCE - The illuminance level in a dim room.
BACKLIGHT - The minimum level of backlight in a dim room.

STATUS: Shows the current setting level of [ILLUMINANCE] and [BACKLIGHT].

When [ON] is set, the Backlight level of the screen changes automatically according to the lighting conditions of the room (see figure below).

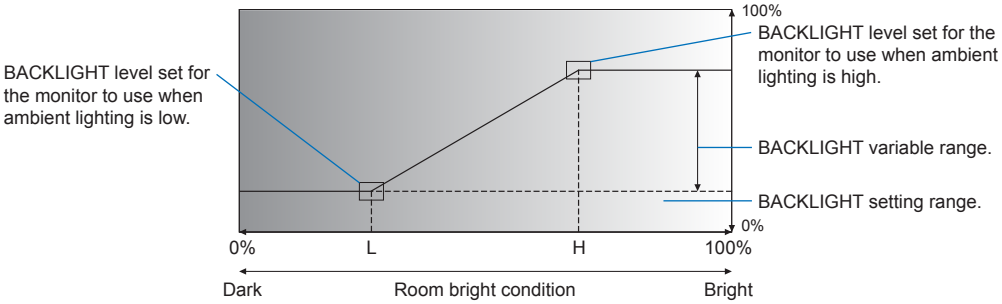

L - ILLUMINANCE level set for the monitor to use when ambient lighting is low.
H - ILLUMINANCE level set for the monitor to use when ambient lighting is high.

TIP:
- When [AMBIENT LIGHT SENSING] is set, [BACKLIGHT] and [MODE1] in [AUTO BRIGHTNESS] functions are disabled.
- Do not select this function when [AUTO BRIGHTNESS] function is set to [MODE1].
- Do not cover the optional sensor unit when [AMBIENT LIGHT SENSING] is enabled. [AMBIENT LIGHT SENSING] is enabled when it is set to [ON].
- When [SPECTRAVIEW ENGINE] is set [ON], this function is disabled.

HUMAN SENSING*3..... Automatically adjusts the backlight and volume levels based on whether or not a human presence is detected in front of the monitor.

TIP: If [AUTO INPUT CHANGE] is set to other than [NONE], this function is set to [DISABLE].

DISABLE: Human sensing function is off.

AUTO OFF: The monitor's backlight automatically turns off, and the volume mutes when no human presence is detected during the period set at [WAITING TIME].
When a person is near the monitor again, the monitor will automatically return to normal mode.

CUSTOM: The monitor's input signal, backlight and volume levels automatically shift to the setting at [INPUT SELECT], [BACKLIGHT] and [VOLUME] when no human presence is detected during the period set at [WAITING TIME].
When a person is near the monitor again, the monitor will automatically return the backlight and volume to normal levels and reproduce the input signal selected for [INPUT SELECT].

TIP: When [SPECTRAVIEW ENGINE] is set to [ON], the [BACKLIGHT] option is disabled. The backlight settings cannot be auto-adjusted when the SpectraView Engine is on as the setting is saved in a picture mode.

AUTO TILE MATRIX

AUTO TILE MATRIX sets the Tile Matrix settings automatically for all monitors in the chain, starting from the primary monitor. Please refer to AUTO TILE MATRIX in the "Connecting Multiple Monitors" on page 63.

TILE MATRIX

TILE MATRIX..... Allows one image to be expanded and shown over multiple screens (up to 100) through a distribution amplifier. This option is for manually configuring the TILE MATRIX settings that are automatically configured when using [AUTO TILE MATRIX SETUP].

TIP:
- Low resolution is not suitable for tiling to a large number of monitors.
  The limitations by input signal resolution are as follows.
  3840 x 2160: [H MONITOR] 10, [V MONITOR] 10 max.
  1920 x 1080: [H MONITOR] 5, [V MONITOR] 5 max.
  640 x 480: [H MONITOR] 1, [V MONITOR] 1 max.
- Tile Matrix operates by using a built-in distribution amplifier to send signals to connected monitors via either the DisplayPort out or HDMI out connections.
- These functions are not available when [TILE MATRIX] is active: [MULTI PICTURE MODE] and STILL on the Remote control unit buttons.
- The tile matrix automatically deactivates when selecting an [IMAGE FLIP] option in the [IMAGE FLIP] menu (except for [NONE]).
- If [ZOOM] is the selected aspect setting, it functions as [FULL] aspect when the tile matrix is active. When the tile matrix deactivates, aspect changes to [ZOOM].

H MONITORS..... Number of monitors arranged horizontally.

V MONITORS..... Number of monitors arranged vertically.

POSITION ..... Select the section of the tiled image to view on the current monitor.

TILE COMP ..... Adjusts the image to compensate for the gap between monitors.
When activated, the image size and position can be adjusted by pressing the ◀ or ▶ button on the Remote control unit.

TILE CUT..... Selects part of the image and shows it on the full screen.
Adjust the frame size using [H MONITORS] and [V MONITORS], then choose a frame [POSITION].
The frame position can be adjusted by pressing the ◀ or ▶ button on the Remote control unit.

IMAGE FLIP

IMAGE FLIP ..... Changes the orientation of the image to left/right, up/down, or rotated.
Press ◀ button or ▶ button to select.

NONE:	Normal mode. A B
H FLIP:	Flips the image left/right. B A
V FLIP:	Flips the image up/down. B A
180° ROTATE:	Rotates the image 180 degrees. B A

TIP:
- When an IMAGE FLIP option is selected, except for [NONE], the following functions are disabled: [MULTI PICTURE MODE], STILL and [TILE MATRIX].
- When the input signal is interlaced, this function is released.
  If the input signal is a non-interlaced signal, this function works.
- When an IMAGE FLIP option is selected except for [NONE], if the input is DisplayPort1 or USB-C with an input signal of 4K50Hz 10 bit or 4K60Hz 10 bit, this function is released.

MULTI PICTURE

MULTI PICTURE MODE .....When [OFF] is selected, one picture is shown.
Select [PIP] or [PBP] then set the input source for each picture.

PIP

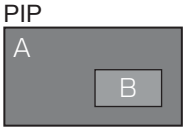

PBP

TIP:
- When “PIP” is selected, “PICTURE 2” (B in the figure) cannot be placed in the center of the screen, nor can it be expanded beyond the center of the screen.
- When “PIP” is selected, “PICTURE1” and “PICTURE2” cannot be expanded beyond the center of the screen.
- This function is released when [IMAGE FLIP] (except for [NONE]), [TILE MATRIX].
- STILL function will not work when this function is activated.
- If [CEC] is set to [MODE1] or [MODE2], setting [MULTI PICTURE] via the Remote control unit may have some limitations.
- When using the [HDMI2], [COMPUTE MODULE], or [OPTION] inputs in MULTI PICTURE MODE, only one of them can be selected for either [PICTURE1] or [PICTURE2] in PIP or PBP. The other selected input must be one of the inputs not listed here.
- If displaying interlaced signal with [PICTURE1] and [PICTURE2], image may be distorted.

AUDIO ..... Selects which audio source to use when [MULTI PICTURE] is enabled.
The audio for the input signal of the selected [PICTURE] is the sound output in the Multi-Picture setup.

ACTIVE PICTURE..... Selects which input is currently being configured for the [MULTI PICTURE MODE] settings. When the OSD menu is closed, this is the input that is controlled by the Remote control unit.
When [MULTI PICTURE MODE] is [OFF], [PICTURE1] is the active picture. When one of the [MULTI PICTURE MODE] functions is enabled, sets which picture should be the active picture.

ACTIVE FRAME..... The active picture is shown within a white frame.

PICTURE SIZE..... Sets the Active Picture size.
Press the SET button to adjust the picture size. Press ▶ button or BACKLIGHT + button to expand.
Press ◀ button or BACKLIGHT – button to reduce.
TIP: When [MULTI PICTURE MODE] is set to [PBP] this function is deactivated.

PICTURE POSITION..... Sets the Active Picture’s window position on-screen.
Pressing the ▶ button moves the Active Picture to the right, and pressing the ◀ button moves it to the left.
Pressing the ▲ button moves the Active Picture up, and pressing the ▼ button moves it down.

ROTATE

Sets the multi-screen rotation.

ROTATE ALL .....Rotate all pictures.
PICTURE1.....Rotates [PICTURE1].
PICTURE2.....Rotates [PICTURE2].

RESET

Resets all PICTURE settings back to factory settings except for [PICTURE MODE] and [SPECTRAVIEW ENGINE].

*1: This function is only available when the optional Raspberry Pi Compute Module Interface Board and Raspberry Pi Compute Module are installed. See page 94.
*2: This function depends on which Option Board you are using. This function is only available when an Option Board is installed.
*3: This function is available only when connecting the optional sensor unit.

■AUDIO

AUDIO MODE

Provides pre-configured audio settings suitable for various environments where this device may be used, or customize settings to viewer preference.

NATIVE..... Standard setting.
RETAIL ..... Surround sound for clarity of audio in retail stores.
CONFERENCING ..... Optimized settings for clarity of audio in conference rooms.
HIGHBRIGHT ..... Lowest volume level in order to focus on the visual message (audio is mute in factory setting).
TRANSPORTATION ..... Lowest volume level in order to avoid disturbance in public spaces (audio is mute in factory setting).
CUSTOM ..... Customizable settings.

VOLUME

Increase or decrease output volume level.

BALANCE

STEREO/MONO.....Select [STEREO] or [MONO] for the audio output.

STEREO: Independent audio channels for routing audio signal. The sound balance between the monitor's left and right internal speakers can be adjusted.
Press the ◀ or ▶ button to move the audio signal to the left or right.

MONO: Audio signals are routed through a single audio channel. Balance cannot be adjusted and the slider will be unavailable.

SURROUND.....Artificially produces surround sound audio.

EQUALIZER

TREBLE.....Accentuates or reduces the high frequency range of audio signals.
Press the ◀ or ▶ button to increase or decrease [TREBLE].

BASS .....Accentuates or reduces the low frequency range of audio signals.
Press the ◀ or ▶ button to increase or decrease [BASS].

ADVANCED

LINE OUT

Selecting [VARIABLE] enables volume control of the audio signal on the Audio output terminal with the VOLUME button on the Remote control unit or ◁/▷ keys on the monitor.

AUDIO INPUT

This function is not available.

INTERNAL SPEAKER

Sets the internal speaker on or off.

RESET

Resets all AUDIO settings back to factory settings except for [AUDIO MODE].

*1: This function is only available when the optional Raspberry Pi Compute Module Interface Board and Raspberry Pi Compute Module are installed. See page 94.
*2: This function depends on which Option Board you are using. This function is only available when an Option Board is installed.

■SCHEDULE

SCHEDULE SETTINGS

Creates a working schedule for the monitor (see page 53).
Press the ▲, ▼, ◀, ▶ buttons to navigate and change the schedule settings. Press the SET button on the Remote control unit or Input change buttons on the monitor to select settings.

SETTINGS

Highlight the number and press the SET button to activate the schedule. The box next to the number has a check when the schedule is enabled. Up to 14 schedules can be created and enabled. Press the ◀ or ▶ button to cycle through schedule numbers.

POWER

Sets the monitor's power state for the schedule. Select [ON] if you want the schedule to turn the monitor on at the specified time. Select [OFF] if you want the schedule to turn the monitor off at the specified time.

TIME

Set the start time for the schedule.

TIP: Fill in both fields for the TIME setting. If either field shows [--], the schedule does not run.

INPUT

Select which video input to use for the schedule. To keep the active input when the schedule starts, make sure the setting is [--].
If you select a specific input, set [ON] at [POWER].

DATE

Select [YEAR], [MONTH], [DAY] if the schedule is only going to run on one day or it is an irregular schedule.

EVERY WEEK

Select this option to have the schedule repeat every week.

OFF TIMER

Powers off the monitor after the time period shown next to the slider. Press the ◀ or ▶ button on the Remote control unit to adjust the timer from 1 to 24 hours.

TIP: Schedules do not run when the [OFF TIMER] is set to [ON].

RESET

Resets all SCHEDULE settings back to factory setting, except for [OFF TIMER].

■SLOT

OPTION*2

Configure settings for a connected Option Board. Please refer to the Compute Module guide for setting details (see page 42).

POWER CONTROL

POWER BUTTON ..... Provides the same operation as the power button on the installed Option Board.

FORCE SHUTDOWN..... Press SET to force a shutdown on the installed Option Board.
TIP: Please use this function only when the operating system cannot be shut down manually.

RESET..... Press SET to force a shutdown and restart of the installed Option Board when it does not respond to shutdown using the [POWER BUTTON] or [FORCE SHUTDOWN] function.
TIP:
- This function may corrupt data files on the Option Board or data files on a storage device connected to an installed Option Board.
- Please only use this function when [POWER BUTTON] and [FORCE SHUTDOWN] cannot be carried out.

Connection Status*3..... Shows the connection status of an Option Board. If the status is not "Connected" then a device is not installed.

Power Status*3..... Shows the operating status of the installed Option Board.

Module*3 ..... Shows information about the installed Option Board including Smart Display Module.

Menu Items

POWER SETTING

AUTO SHUTDOWN*4 ..... The installed Option Board is turned off when the monitor switches into standby state.

COMPUTE MODULE*1

Configure settings for a Raspberry Pi Compute Module Interface Board and Raspberry Pi Compute Module.

POWER CONTROL

POWER BUTTON ..... Provides the same operation as the power button on the installed Compute Module.

RESET..... Press SET to force a shutdown and restart of the Compute Module when it does not respond to shutdown using the [POWER BUTTON] function.

TIP: This function may corrupt the data files on the Compute Module and data files on a storage device connected to the Compute Module interface card.

Connection Status*3..... Shows the connection status of a Compute Module. If the status is not “Connected” then a device is not installed.

Power Status*3..... Shows the operating status of the Compute Module.

Module*3 ..... Shows information about the Compute Module Interface Board.

POWER SETTING

AUTO SHUTDOWN*4 ..... The installed Compute Module is turned off when the monitor switches into standby state.

ADVANCED SETTING

SHUTDOWN SIGNAL ..... Enables or disables the use of GPIO 23 to signal that power to the Compute Module will be shutting down.

IR SIGNAL..... Enables or disables the forwarding of Remote control unit signals.

MONITOR CONTROL ..... Enables or disables the internal serial connection between the monitor and the Compute Module.

WDT ..... Enables or disables the monitor’s built-in Watchdog Timer function for the Compute Module. When enabled, the monitor will expect to receive a periodic reset command from the Compute Module via the internal UART. If the command isn’t received for three consecutive timeout periods, the monitor will restart the Compute Module.

START UP TIME: Sets the time delay for when the monitor should start receiving WDT reset commands after the Compute Module powers up.

PERIOD TIME: Sets the maximum amount of time within which the monitor must receive WDT reset commands from the Compute Module.

SLOT POWER

Allows the monitor to supply power to an Option Board slot during power save mode or standby state.

TIP: To activate the power management function with no signal input from a device connected to the Option Board, please set [OPTION POWER] to [AUTO] or [ON].

AUTO..... Power is continuously supplied to the Option Board slot, even during power save and standby state.
Power to the Option Board slot stops during power save and standby state, when there is no installed device.

ON ..... Power is continuously supplied to the Option Board slot, even during power save and standby state.

OFF ..... Power to the Option Board slot stops during power save and standby state.

RESET

Resets all SLOT settings back to factory settings, except for “ADVANCED SETTING” and “SLOT POWER”.

*1: This input is available when the optional Raspberry Pi Compute Module Interface Board and Raspberry Pi Compute Module are installed. See page 94.
*2: This function depends on which Option Board you are using. This function is only available when an Option Board is installed.
*3: Some Option Boards may not show it correctly.
*4: When the Option Board is a computer, check the settings on the computer side.

■NETWORK

NETWORK INFORMATION

Configures the monitor's network settings either automatically or manually.

IP SETTING

AUTO..... The IP address and other network settings are automatically obtained from the DHCP server.
MANUAL..... The network settings must be entered manually. Contact the Network Administrator for this information.

TIP: Consult your network administrator for the IP address when [MANUAL] is selected for [IP SETTING].

IP ADDRESS

Set the IP address for the monitor connected to the network when [MANUAL] is selected for [IP SETTING].

SUBNET MASK

Set the subnet mask data for the monitor connected to the network when [MANUAL] is selected for [IP SETTING].

DEFAULT GATEWAY

Set the default gateway for the monitor connected to the network when [MANUAL] is selected for [IP SETTING].

TIP: Enter [0.0.0.0] to delete the setting.

DNS

Set the IP addresses of DHCP servers.
AUTO..... The DNS server which is connected to the monitor will automatically assign its IP address.
MANUAL..... Manually enter the IP address of the DNS server which is connected to the monitor.

TIP: Consult your network administrator for the IP address when [MANUAL] is selected for [DNS].

DNS PRIMARY

Enter the primary DNS server settings of the network connected to the monitor.

TIP: Enter [0.0.0.0] to delete the setting.

DNS SECONDARY

Enter the secondary DNS server settings of the network connected to the monitor.

TIP: Enter [0.0.0.0] to delete the setting.

MAC ADDRESS

Shows the monitor's [MAC ADDRESS].

EXECUTE

Executes the network information settings.

NETWORK INTERFACE

Enables or disables the network function for controlling the monitor remotely.

INTERFACE

When [DISPLAY] is disabled, these functions do not work: External Control, Mail, Daisy chain functions, NETWORK SERVICES, NAVISET SECURE, IEEE802.1X, FIRMWARE UPDATE (NETWORK).

Disabling the [COMPUTE MODULE] setting disables the ability to control network connections and monitors using [COMPUTE MODULE]. Press SET to activate the settings.

TIP: If you disable [DISPLAY], monitor control in a daisy chain configuration is not available.
Please be aware of the impact in multi-monitor installations before disabling it.

NETWORK SERVICES

Enables or disables the network port of the selected item. Disabling it closes the port and disables each service.
When performing a firmware update via the network, please enable all settings.

NAVISET SECURE

Provides an encrypted peer-to-peer secure connection for remote management and control of the monitor via LAN or Internet.

TIP: This menu includes the monitor's IP address, model name, and serial number.

START PAIRING

This opens the monitor for pairing. The monitor remains open to pairing for 72 hours. If not successfully paired within that time, the pairing mode will automatically close.

PAIRING MODE .....Sets the type of connection to use with the monitor.

LOCAL: Pairs with an application running on the same network as the monitor. No Internet connection is required.

REMOTE: Pairs with an application running on a different network than the monitor via the Internet. An Internet connection is required.

PAIRING CODE When enabled, it requires a code when pairing the monitor with an application. When [PAIRING MODE] is [LOCAL], this function is optional and can be disabled. It allows for a quick, less secure connection to the monitor while open for local pairing.

TIP: A code is always required when the [PAIRING MODE] is [REMOTE].

RESET PAIRING DATA

Deletes gained pairing data.

NAVISET SECURE REMOTE

Provides secure remote access to the monitor for management via the Internet. When disabled, only secure local access via LAN is available.

You will be prompted to accept a usage agreement when enabling this feature. The specified device-identifying information in this menu is sent to a secure remote registration server, which is required for remote access.

TIP:
- This setting requires an active Internet connection.
- The "STATUS" indicates the status of the monitor's connection to the Internet-based cloud server after enabling [NAVISET SECURE REMOTE] and accepting its usage agreement. This status does not apply to LAN connection communication.

PING

Confirm successful connection with the network by communicating with a preset IP address.

IP ADDRESS

Sets an [IP ADDRESS] for sending [PING].

EXECUTE

Checks a reply can be sent to the monitor or not from the [IP ADDRESS] by sending [PING].

HOSTNAME

Set a Hostname.

IEEE802.1X

Enable IEEE802.1X if check the check box. By using authentication of IEEE802.1X, authorized devices can be allowed to use the network. Unauthorized devices use of the network by a third party can be prevented. IEEE802.1X settings are available in HTTP Server (See page 78).

RESET

Resets all NETWORK settings back to factory settings, except for [NAVISET SECURE] and network-related functions in the [NETWORK SERVICES].

■PROTECT

POWER SAVE SETTINGS

POWER SAVE

Enables or disables the monitor entering power saving mode. When [ENABLE] is selected, the monitor goes into power saving mode after the period of time has passed with no input signal detected or signal loss has occurred. When the monitor is in power saving mode, the power LED will change color. Refer to the Power LED table (see page 88). When [DISABLE] is selected, the monitor doesn't go into power saving mode.

Please refer to the monitor's specifications (see "Product Specifications" on page 90) for power consumption information.

TIP:
- When the monitor is connected to a computer, the computer's display adapter may not stop sending digital data even though there is no image on-screen. If this occurs, the monitor will not switch into standby state.
- If [AUTO OFF] or [CUSTOM] is selected in [HUMAN SENSING]*1, the power save function does not work.

*1: This function is available only when connecting the optional sensor unit.

TIME SETTING ..... Sets the amount of time the monitor should wait for input signal before going into power save mode.

POWER SAVE MESSAGE

Shows a message as the monitor is entering low power mode.

QUICK START

When [ENABLE] is selected, the monitor will quickly return to the [ON] state when a signal is detected. Enabling this option increases standby power consumption.

THERMAL MANAGEMENT

FAN CONTROL

Sets the cooling fan behavior.

AUTO..... To protect the internal components, the fan turns on when the monitor's internal temperature exceeds operating parameters. The fans will automatically turn off when the monitor's internal temperature is within its normal operating specifications.

ON ..... The monitor's fan is always on.

TIP: The fan cannot be manually controlled. It is always on when [ON] is selected in the OSD menu or when [AUTO] is selected and the monitor's internal temperature exceeds its specified operating temperatures.

FAN SPEED

Adjusts between [LOW] and [HIGH].

DISPLAY

FAN STATUS

Shows the status of the monitor's internal fan.

INTERNAL TEMPERATURE ..... Shows the status of the internal temperature of the monitor.

SLOT

Shows the internal temperature of the Option Board slot.

FAN STATUS

Shows the status of the fan for the Option Board slot.

INTERNAL TEMPERATURE ..... Shows the status of the internal temperature of the Option Board slot.

SYSTEM FAN REQUIREMENT

Show the requirement operation from the Option Board slot.

OPTION

COMPUTE MODULE

SCREEN SAVER

Reduces the risk of Image Persistence.

GAMMA

If you select [ON], it switches to gamma, which is less likely to cause image persistence, and reduces the risk of image persistence.

TIP: This function is available when [SPECTRAVIEW ENGINE] is [OFF] and [GAMMA] in [PICTURE MODE] is set to except for [PROGRAMMABLE1,2,3].

MOTION

Slightly moves the image in four directions (up, down, right, left) at the pre-set interval.

INTERVAL ..... Use the ◀ or ▶ button on the remote control unit to set the time on the [INTERVAL] slider.

RANGE..... Set how much move the image. The higher the number, the higher the effect of reducing image persistence. The sides of the image are temporarily cut off as the image is moved around the screen when being shifted off then back onto the screen.

POWER ON DELAY

Delays the monitor from turning on for the amount of time set when the POWER button is pressed.

DELAY TIME

The delay can be set between 0 and 50 seconds.

LINK TO ID

Links the [DELAY TIME] to the monitor's ID. This helps to prevent power surges that may occur if all monitors in a multi-monitor installation were to turn on at the same time. The higher the Monitor ID, the longer the delay is before the monitor powers on.

For example, if the Monitor ID is 20 and the [DELAY TIME] is 5 seconds, the amount of time that passes between when the POWER button is pressed and when the power actually turns on is 95 seconds.

This allows the 19 monitors in the multi-monitor installation to turn on with 5-second intervals between each power on.

TIP: If the [DELAY TIME] is set to 0 seconds, there will be no extended delay for [LINK TO ID]. The delay time must be 1 second or higher to delay power on.

SECURITY SETTINGS

Sets the monitor's security function.

PASSWORD

Input the current password to change the settings in this menu. The default password is 0000.

SECURE MODE

Selects when a security password is required to use the monitor.

START-UP LOCK ..... The password is required when powering on the monitor.

CONTROL LOCK ..... The password is required when pressing the buttons and key on the monitor or the buttons on the Remote control unit.

CHANGE PASSWORD

Changes the password.

The factory preset password is [0000].

CURRENT PASSWORD ..... Enter the current password.

NEW PASSWORD ..... Enter a new password.

CONFIRM PASSWORD ..... Enter the new password again to confirm the password change.

LOCK SETTINGS

Prevents the monitor from being controlled by the Remote control unit, the buttons and key on the monitor, or both. Please refer to "Locking the Button Controls" (page 60 and page 61).

RESET

Resets all SECURITY settings back to factory setting, except for [POWER ON DELAY] and [SECURITY SETTINGS].

■SYSTEM

MONITOR INFORMATION

Shows the model name, serial number, and firmware revision of the monitor.

MODEL

SERIAL

CARBON SAVINGS

Shows the estimated carbon saving information in kg-CO2. The carbon footprint factor in the carbon saving calculation is based on the OECD (2008 Edition).

CARBON USAGE

Shows the estimated carbon usage information in kg-CO2. This is the arithmetic estimation, not actual measurement value. This estimation is based without any options.

FIRMWARE

Shows the monitor's current firmware revision.

MAC ADDRESS

Shows the monitor's [MAC ADDRESS].

DATE & TIME

TIP: If the monitor's main power has been turned off for about two weeks, the clock function stops working. In this case, please set the [DATE & TIME] setting again.

TIME ZONE

Set the time difference between the region where the monitor is used and the UTC (Universal Time, Coordinated).

TIP: The HTTP server menu has additional UTC regional information so that the TIME ZONE can be easily changed (see page 71).

INTERNET TIME SERVER

Automatically sets the date and time by synchronizing with the NTP server on the network.
Select [ON] then input the IP address or Hostname in NTP server. Select [UPDATE].

YEAR

Sets the current year. Press the ◀ or ▶ button on the Remote control unit to cycle to the current year. Press [UPDATE] to apply the change.

MONTH

Sets the current month. Press the ◀ or ▶ button on the Remote control unit to cycle to the current month. Press [UPDATE] to apply the change.

DAY

Sets the current day of the month. Press the ◀ or ▶ button on the Remote control unit to cycle to the current day. Press [UPDATE] to apply the change.

TIME

Sets the current time. Highlight the hour field, then press the ◀ or ▶ button on the Remote control unit to cycle to the current hour, then repeat this for the minutes field. Press [UPDATE] to apply the change.

TIP:
- If the monitor is at a location that is currently in Daylight Savings, set the TIME field to what the current time would be when Daylight Savings is not in effect. Then enable the [DAYLIGHT SAVING] function to have the clock automatically adjust to the current time.
- If the [INTERNET TIME SERVER] is set to [ON], this function is disabled.

CURRENT DATE TIME

Shows the current date and time. This data does not reflect changes to the Date and Time settings until SET is pressed on the Remote control unit.

UPDATE

Sets the date and time. When [INTERNET TIME SERVER] is set to [ON], updates the time.

DAYLIGHT SAVING

Automatically changes the real-time clock to match Daylight Savings hours.

TIP: Set the [DATE & TIME] before enabling the [DAYLIGHT SAVING] setting.

DAYLIGHT SAVING

Automatically adjusts the current time, when Daylight Saving hours are in effect, based on the start and end dates selected in this menu.

BEGIN MONTH/DAY/TIME

Set the month, day, and time for when Daylight Saving begins.

END MONTH/DAY/TIME

Set the month, day, and time for when Daylight Saving ends.

TIME DIFFERENCE

Set the time difference for the real-time clock adjustment. When Daylight Saving starts, this is the amount of time the real-time clock will be adjusted.

EXTERNAL CONTROL

Sets the monitor's ID number, assigns the monitor to groups.

PORT

Select a port controlling monitor externally [RS-232C] or [USB] then press SET.

When "USB" is selected, the monitor is controlled by the computer connected to USB Type-C1 (Upstream) port.

MONITOR ID

Sets the monitor's ID number between 1 and 100. This number is also used by the Remote control unit when in ID mode.

TIP: It is strongly recommended so that the monitor can be individually identified and controlled.

GROUP ID

This function assigns monitors to groups, which gives you the ability to send commands to all monitors; however, only monitors with the matching Group ID perform the command. Group IDs allow specific groups of monitors to be targeted using a single command, providing high-speed parallel operation. It is useful for scenarios such as rapid switching of video inputs or tile matrix configurations within a video wall. The [GROUP ID] function is used only via RS-232C commands from your software or control system. Monitors can be assigned to any of the 10 available Group IDs, labeled A-J. Refer to the External_Control.pdf file (see page 94) for the monitor's command codes.

AUTO ID/IP SETTING

Automatically sets all of the monitor IDs and/or IP addresses in a LAN chain. Highlight [START] and press SET on the Remote control unit to show the [AUTO ID/IP SETTING] menu.

TIP:
- All changes to the [AUTO ID/IP SETTING] menu should be made on the master monitor, which is the first monitor in the LAN chain. Automatic numbering consecutively counts up by 1 starting from the master monitor.
- Do not turn off the monitors' main power switch or put it into standby while [AUTO ID/IP SETTING] or [AUTO ID/IP RESET] is in progress.
- Do not interrupt the monitors' LAN chain by connecting network devices between the monitors.

SETTING ITEM ..... Selects which function to automatically number in the LAN chain. Each number is assigned consecutively starting from the base numbers set in this menu.

MONITOR ID: Monitor ID numbers are automatically assigned for all monitors in the LAN chain, starting from the number set for [BASE NUMBER].
This option does not change the current IP addresses.

IP ADDRESS: IP addresses are automatically assigned for all monitors in the LAN chain. The first three octets are set using the format in [BASE ADDRESS], the fourth octet starts at the BASE NUMBER and counts up by 1 for each subsequent monitor in the LAN chain.
This option does not change the current Monitor IDs.

ID and IP: Both the monitor ID and the IP address are assigned for all monitors in the LAN chain, starting from the [BASE NUMBER] and [BASE ADDRESS].

BASE NUMBER ..... Sets the starting number for the monitor ID and/or IP address.
This is the number that is assigned to the master monitor. The automatic numbering assigns consecutive numbers, starting from this number and counting up by 1, to each monitor in the LAN chain.

When running AUTO ID:
- Monitor numbers can be between 1-99. However, the master monitor must have a starting number low enough to include all monitors in the LAN chain. The automatic numbering counts up by 1 until it reaches 99. For example, if there are 20 monitors in the LAN chain, the BASE NUMBER must be 80 or lower.

When running AUTO IP:
- This is the fourth octet in the IP address. Octets one to three are set at BASE ADDRESS. The BASE NUMBER is automatically assigned to the master monitor and counts up by 1 until the end of the LAN chain.
- If the master monitor is connected to a network, make sure there are no IP address conflicts before running AUTO IP.

When running IP and ID:
- The BASE NUMBER is the starting number for both the monitor ID and the fourth octet of the IP address. Due to this, if the master monitor is going to be connected to a network, and a block of IP addresses are not available at a number that is low enough for starting automatic ID, then it is recommended that AUTO ID and AUTO IP be run separately instead of using the grouped auto ID and IP function.

BASE ADDRESS..... Sets the first octet to the third octet for the IP addresses assigned during automatic numbering. If the master monitor is connected to a network, these fields must match the network IP numbers for the monitors to be accessed over a LAN, such as 192.168.0 or 10.0.0.

The fourth octet is set at [BASE NUMBER] and counts up by 1 starting from the master monitor.

TIP: [BASE ADDRESS] is only available when [IP ADDRESS] or [ID and IP] is selected for the [SETTING ITEM].

ID/IP SETTING START..... Highlight YES then press SET on the Remote control unit to activate the automatic number function, which first detects the number of monitors connected in the LAN chain before proceeding.

DETECTED MONITORS..... Shows the number of detected monitors connected in the LAN chain. If the number is correct, highlight CONTINUE then press SET on the Remote control unit to start automatic numbering.

If the number of monitors is incorrect, make sure all monitors are powered on and verify the LAN cable connection between monitors. Then highlight RETRY and press SET to restart the monitor detection.

When the [AUTO ID/IP SETTING] is complete, the status FINISH! will show on screen.

TIP: Do not turn off the monitors' main power switch or put it into standby while [AUTO ID/IP SETTING] is in progress.

AUTO ID/IP RESET

Resets all of the monitor IDs and/or IP addresses in a LAN chain. Highlight START and press SET on the Remote control unit to show the [AUTO ID/IP RESET] menu.

RESET ITEM ..... Select which item to reset for all monitors in the LAN chain.

ID/IP RESET START ..... [MONITOR ID] will change all of the monitor IDs to 1 (default setting).
[IP ADDRESS] will change all of the monitor IP addresses back to their previous setting.
[ID and IP] will reset both the monitor IDs and IP addresses.
Highlight the field [PRESS (SET) TO EXECUTE] then press SET.

DETECTED MONITORS

Shows the number of detected monitors.

COMMAND TRANSFER

When [ON] is selected, commands sent to the master monitor are transferred to the other monitors in the LAN chain.

LANGUAGE

Select the language used by the OSD.

OSD

OSD POSITION

Determines the location where the OSD appears on the screen.

Menu Items

INFORMATION OSD

Selects whether or not to automatically show information about the monitor when it powers on, changes input, or the current input signal changes.

The information includes the current input, audio source, aspect ratio, resolution, and refresh rate. The monitor's ID and IP address are also shown unless their setting is OFF.

Note that the information OSD is also shown when pressing the DISPLAY button on the Remote control unit. The Remote control unit function cannot be turned off.

COMMUNICATION INFO.

Selects whether or not to show the [MONITOR ID] and [IP ADDRESS] when the [INFORMATION OSD] is [ON] or when pressing the DISPLAY button on the Remote control unit.

The information is selected in [EXTERNAL CONTROL] or [NETWORK INFORMATION] in [NETWORK].

OSD TRANSPARENCY

Makes the OSD partially transparent.

OSD ROTATION

Changes the OSD orientation between landscape and portrait.

LANDSCAPE.....Shows the OSD in landscape orientation.

PORTRAIT .....Shows the OSD in portrait orientation.

KEY GUIDE

Shows the monitor's button controls Key Guide when the OSD Menu is open.

The Key Guide is aligned to the monitor's buttons and key and does not move if the OSD POSITION changes. It is a visual guide to indicate the position of the buttons so that features can be easily adjusted when not using a Remote control unit.

CLONE SETTING

Allows for exporting and importing some of the OSD menu settings between monitors.

CLONE SETTING

Selects the option to import or export the OSD menu settings.

USB WRITE.....Exports the monitor settings to a connected USB flash drive.

USB READ .....Imports the monitor settings from a connected USB flash drive.

LAN.....Exports the monitor settings to another monitor via a LAN cable.

TIP: When importing settings using a USB flash drive:

- Format the USB flash drive for FAT32.
- Connect the USB flash drive to the USB service port (See page 18).

TARGET INPUT

Selects to import settings for [ALL] inputs or only the [CURRENT] input.

Individually select each OSD menu function's settings to import. The settings are imported from the selected [CLONE SETTING] device.

Option items are INPUT, PICTURE, AUDIO, SCHEDULE, SLOT, NETWORK, PROTECT, SYSTEM, HTTP.

TIP:
- These options are disabled if the selected [CLONE SETTING] is [USB WRITE].
- The [HTTP] option copies the monitor's web interface settings. Only settings that are not monitor specific are exported and imported during this process.

COPY START

Highlight [PRESS (SET) TO EXECUTE], then press SET to initiate import or export of the OSD menu settings.

This field is enabled when:

- [CLONE SETTING] is set to [USB WRITE].
  Pressing SET will initiate exporting the OSD menu settings to an attached USB flash drive.
- [CLONE SETTING] is set to [USB READ], or [LAN] and at least one OSD menu option under [TARGET INPUT] is selected.
  Pressing SET will initiate importing the selected OSD menu settings to the selected [TARGET INPUT].

TIP: Once this process is started it cannot be undone.

POWER INDICATOR

Turns on or off the power LED that indicates the monitor is powered on and in active mode. The monitor's power LED will not glow when this setting is [OFF].

MUTE SETTING

Allows you to mute the monitor's audio and video output.

AUDIO: Mutes the audio output when the Remote control unit's MUTE button is pressed.
VIDEO: Mutes the video output when the Remote control unit's MUTE button is pressed.
AUDIO & VIDEO: Mutes the audio and video output when the Remote control unit's MUTE button is pressed.

TIP: The MUTE setting is released in the following cases:

- Change the [INPUT].
- Turn off/on the monitor by the main power switch.
- Turn off/on the monitor with the power button on the Remote control unit or on the monitor.
- Return from power save.
- Change the [MUTE SETTING] setting.
- Change the [AUDIO MODE] setting.
- Volume is changed with the Remote control unit or the main unit key.
- Video signal (resolution/scanning frequency) is changed.

USB

PC SOURCE

Select which device you want to use to control the monitor and a device connected to USB Type-C1 port (Upstream).

AUTO..... Automatically selects the PC SOURCE type.
EXTERNAL PC..... Select this option to use a PC when it is connected to the USB Type-C1 port (Upstream).
OPTION..... Select this option to use an Option Board. If an Option Board is not installed, OPTION will not be available as a selection.
COMPUTE MODULE .... Select this option when a Raspberry Pi Compute Module and Interface Board is installed. If a Raspberry Pi Compute Module is not installed, COMPUTE MODULE will not be available as a selection.

TIP:

- The options available depends on if internal PC sources are installed in the monitor or a device is connected to Option Board slot.
- Internal USB upstream hub switches to a device connected to USB Type-C1 port (Upstream) when [EXTERNAL PC] is set.

USB POWER

Supplies power to the USB Type-A port and USB Type-C2 (downstream) port. Select [ON] to supply power during standby.

TIP: Power consumption by devices connected to this port depends on the USB devices.

USB-C SETTING

Sets the transfer speed for the USB Type-C1 (Upstream) port.

USB2.0 ..... The maximum transfer speed is equivalent to USB 2.0.
USB3.2 ..... The maximum transfer speed is equivalent to USB 3.2.

TIP:

- To avoid data loss, before changing the setting, ensure that no USB flash drives are in use by the operating system.
- If [USB3.2] is selected, [MST] in [DisplayPort VERSION] is not available.
- When "USB3.2" is set, "1.2" is only available at "DisplayPort VERSION".

UPDATE FIRMWARE (USB)

Updates the firmware after connecting a USB flash drive (formatted FAT32) containing a FIRMWARE image file (PAC file) to the Service port on the monitor (See page 18).

UPDATE FIRMWARE (NETWORK)

Provides the option to check for new revisions and, if found, update the firmware via the network.

NOTE: While updating the firmware, do not disconnect the monitor from the network or turn off the monitor. If the firmware update fails, try running the update again.

UPDATE METHOD

Sets the network firmware update method to use.

AUTO..... Set it to update to the latest firmware via the Internet at the specified time.
If the latest firmware is detected, a firmware update is performed.

MANUAL..... Set to check if the latest firmware is available via the Internet at the specified time.
If the latest firmware is detected, “MANUAL UPDATE” will indicate that a firmware update is available.
No firmware update will be performed.

OFF ..... Do not update to the latest firmware via the Internet.

UPDATE SCHEDULE

If you set “AUTO” or “MANUAL” in “UPDATE METHOD”, check if the latest firmware is available at the set time.

MANUAL UPDATE

Check for the latest firmware over the Internet.
If the latest firmware is detected, the firmware can be updated.

TIP: This function is not available if “UPDATE METHOD” is set to except for “MANUAL”.

LATEST UPDATE

Shows the date and revision of the last firmware update over the Internet.

RESET

Resets all SYSTEM settings back to factory settings, except for [LANGUAGE], [OSD ROTATION], [KEY GUIDE], [DATE & TIME] and [DAYLIGHT SAVING].

FACTORY RESET

All items are returned to the factory shipment state except for:

- [ADVANCED SETTING] in the [SLOT] ➞ [COMPUTE MODULE].
- [PASSWORD] in the [PROTECT] ➞ [SECURITY SETTINGS].
- [DATE & TIME] and [DAYLIGHT SAVING] in the SYSTEM.

TIP: This will reset all items in all daisy chained monitors. Please be careful to avoid resetting all items inadvertently.

Advanced Operation

The schedule function allows the monitor to automatically change between power on and standby state at different times.

To program the schedule:

1. Enter the [SCHEDULE] menu.

① Press the MENU button on the Remote control unit.

② Highlight [SCHEDULE SETTINGS] in [SCHEDULE] using the ▲ and ▼ buttons.

③ Press the SET button or the ▶ button to enter the Settings menu.

④ Highlight the desired schedule number and press the SET button.

⑤ The box next to the number will have a check.
The schedule can now be programmed.

2. Set a Power On/Off Schedule.

① Use the ▼ button to highlight the [POWER]. Use the ◀ and ▶ buttons to set [ON].

To set a power off schedule, set [OFF].

② Use the ▼ button to highlight the [TIME]. Use the ◀ and ▶ buttons to set the time.

③ Use the ▲ and ▼ buttons to highlight [INPUT]. Use the ◀ and ▶ buttons to choose the input source.

④ Use the ▼ button to select [DATE] or [EVERY WEEK]. Press the SET button on a menu which is suitable for the schedule.

- If the schedule is to be run on a specific day, choose [DATE] and press the SET button.
- If a weekly schedule is desired, choose the [EVERY WEEK] using the ▲ and ▼ buttons and pressing the SET button to select. Then select the specific day and press the SET button.

⑤ After a schedule is programmed, the remaining schedules can then be set. Press the MENU button to leave the OSD or press EXIT button to go back to the previous menu.

TIP:
- The [DATE & TIME] needs to be set before adding schedules.
- Schedules you configure are saved when closing the [SCHEDULE SETTINGS] window.
- If multiple schedules are set to start at the same time, the conflicting schedule with the highest number is given priority.
- Schedules will not run when the [OFF TIMER] is set to [ON].
- If the input is no longer valid, the text shows in red.
  For example, if the following settings are changed after the input is set for the schedule, the text changes to red and input changing does not occur:
  - [AUTO INPUT CHANGE] is set to [CUSTOM DETECT] but the input selected at schedule is not selected in [CUSTOM DETECT].
- Schedules do not run while the [SCHEDULE SETTINGS] menu is open.

Set date and time to the monitor:

TIME ZONE: Set the time difference between the region where the monitor is used and the UTC (Universal Time, Coordinated).

- Initial value: +00:00.
- When using the monitor in Japan, set the time as [+09:00].

INTERNET TIME SERVER: Automatically sets the date and time by synchronizing with the NTP server on the network.

When synchronizing the time with the NTP server on the network to obtain the correct time, set [INTERNET TIME SERVER] to [ON]. Enter the IP address of the NTP server or the [Hostname] and then select [UPDATE] and press the SET button to initiate an update.

TIP: When a period of about two weeks has passed after disconnecting the power cord of the monitor, the time will be reset and the clock function will stop. When reset, the date becomes [JAN.01.2025] and the time becomes [00:00]. If the clock function has stopped, configure the [DATE & TIME] again.

Advanced Color Adjustment

The SpectraView Engine (SVE) is a custom color processor engine integrated in the monitor. It combines individual characterization and calibration of the monitor during production together with temperature and time monitoring, to provide an unparalleled level of color control, accuracy and stability.

Adjustable color uniformity correction is available, utilizing detailed individual factory screen measurements together with the SVE to produce the best possible matching displays.

The SVE provides the utmost in versatility; from faster and more advanced color calibration, to the ability to accurately emulate colorspaces such as Adobe®RGB and sRGB, to performing printer output emulations using ICC Profiles and internal 3D Look Up Tables. Please see page 94 for software compatible with SVE.

The SVE can operate in one of two modes: On or Off.

To enable or disable the SpectraView Engine using the Remote control unit:

1. **Using the Remote control unit, press the MENU button.**
2. **Navigate to the [PICTURE] menu then to [SPECTRAVIEW ENGINE].**

   Use the ▲▼ ◀ ▶ buttons to navigate the OSD menu.
3. **Highlight [ON] or [OFF] and press SET to enable or disable the SpectraView Engine.**
4. **Press the EXIT button to return to the main [PICTURE] menu.**

■Using the SpectraView Engine

When the SVE is on, the monitor's internal processor will handle many of the color management features and the user color controls allow a unique level of precision to be achieved. The white point is adjusted using a CIE x, y control and the grayscale response of the display is calculated and managed by the monitor itself.

The SVE includes Uniformity Correction, where different levels of compensation can be selected to enable a trade-off between the most uniform brightness and color vs. maximum brightness.

The SVE has five Picture Mode memories that can be individually configured and selected. Each individual Picture Mode can store fully customized color settings. This allows you to quickly switch between different settings by just changing between picture modes.

Using the SVE will also give access to other advanced functionality, such as the ability to emulate several modes of human color vision deficiency as well as the ability to select the monitor's output color gamut.

To change the settings in each SVE picture mode:

Presets have been configured with settings for general use as described in the "Preset Types" table next page. When choosing a preset for the SVE picture mode, all of the settings are immediately adjusted to match the preset. Each setting can be individually adjusted to customize as needed.

1. **Using the Remote control unit, press the MENU button.**
2. **Navigate to the [PICTURE] menu then to [PICTURE MODE].**

   Use the ▲▼ ◀ ▶ buttons to navigate the OSD menu.
3. **Press the ▶ button to navigate to the [PICTURE MODE] field.**
4. **Select a setting from 1 through 5 at [PICTURE MODE].**

   1 → 2 → 3 → 4 → 5

5. Select a preset item at [PRESET].

Choose the [PRESET] that is most suitable for the type of content that is shown or application usage.

Each [PICTURE MODE] includes [LUMINANCE], [BLACK] (Black level), [GAMMA], [WHITE (K)] (color temperature), [WHITE (x, y)] (White point CIE x, y), [RED] (Red Primary CIE x, y), [GREEN] (Green Primary CIE x, y), and [BLUE] (Blue Primary CIE x, y) settings. You can change these settings in the [PICTURE MODE] menu.

If any settings need to be changed, press the ▼ button to navigate through the settings and make any adjustments needed using the ◀ ▶ buttons.

6. Press the EXIT button to return to the main [PICTURE] menu.

TIP:
- Changing the settings in the [PICTURE MODE] menu does not change the default settings for the [PRESET].
- "∗" mark is shown if the Picture Mode settings have been changed from the default preset settings.

Preset Types

PRESET	PURPOSE
sRGB	The standard color setting of the Internet, Windows® operating systems, and many smart-phone and other digital cameras. Recommended setting for general color management.
AdobeRGB	Wider color gamut setting used in high-end graphics applications such as professional digital still cameras and printing.
eciRGB_v2	Color setting recommended by Europe printing group, ECI (The European Color Initiative).
DCI-P3	Color setting for digital cinema.
Rec.709	Color setting for High-definition television.
Rec.2100 (HLG)	Color setting for HDR (High Dynamic Range) broadcasting.
Rec.2100 (PQ)	Color setting for HDR (High Dynamic Range) digital cinema on disc and internet streaming.
Low Blue	Reduces blue light emitted from the monitor. Paper-like color setting. (The Low Blue function substantially reduces blue light and helps to alleviate eye-strain.)
Signage	Color setting for use in digital signage applications with high ambient lighting conditions where a bright and high color temperature white point may be desirable.
TV Studio	Color setting for use with "on set shooting" where the monitor's screen will be captured by the camera and should match the studio set's incandescent lighting.
Full	Native LCD panel color gamut. Suitable for use with color managed applications.
DICOM sim.	Color setting for medical imaging that conforms to DICOM GSDF (Grayscale Standard Display Function). **NOTE:** Do not use for diagnostic purposes.
Programmable	The preset name can be changed by software.

SpectraView Settings

SVE SETTINGS	PURPOSE	
LUMINANCE	Adjusts the overall image and screen background luminance. When the setting is too high to show, the OSD characters are changed to yellow.	
BLACK	Adjusts the black luminance. When the setting is too low to show, the OSD characters are changed to yellow.	
GAMMA	Allows you to manually select the brightness level of grayscale.	
	sRGB:	Gamma setting for sRGB.
	L Star:	Gamma setting for the CIELAB color space Lab.
	Rec.1886:	Gamma setting for HDTV broadcasting.
	HDR-Hybrid Log:	Gamma setting for HDR, typically for UHD broadcasting. System gamma can be adjusted.
		SYSTEM GAMMA: System gamma is adjustable in 0.5-2.0 range. When “Auto” is selected, the system gamma is automatically selected according to the “Luminance” setting.
	HDR-ST2084 (PQ):	Gamma setting for HDR, typically for UHD disk media and streaming videos. Peak luminance value is adjustable.
		PEAK LUMI.: Sets the peak luminance value to show HDR-ST2084 (PQ) luminance range. A larger value will improve white saturation but the picture becomes darker. When “Auto” is selected, “Luminance” is used as the peak luminance setting.
	DICOM:	DICOM GSDF (Grayscale Standard Display Function) is typically used for medical imaging.
	Programmable:	A programmable gamma curve can be loaded using our optional software.
	Custom:	CUSTOM VALUE: The gamma value is selected from a range from 0.5 to 4.0 in 0.1 steps. For general images 2.2 is used. Increasing the value will make the intermediate color darker, and lowering the value will make the intermediate color brighter.

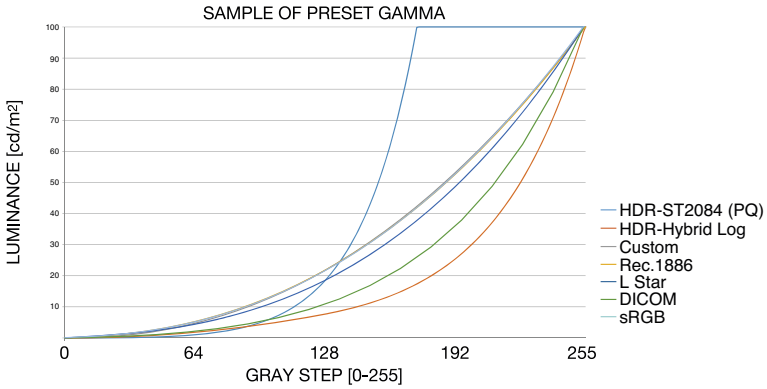

SVE SETTINGS	PURPOSE
WHITE (K) WHITE (x, y)	Adjusts the white by color temperature (K) or CIE x, y setting. A lower color temperature will result in a reddish screen and a higher color temperature in a bluish screen. A larger x value will result in a reddish screen, a larger y value changes the screen to greenish, and smaller x,y values will change the screen to bluish white. 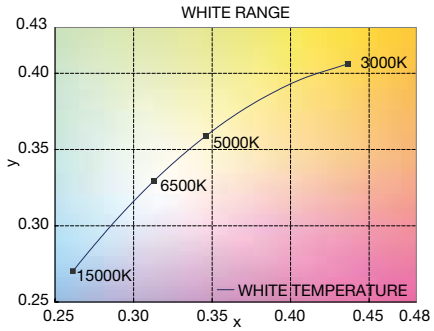
RED (x,y) GREEN (x,y) BLUE (x,y)	Adjusts the color gamut. Set chromaticity with CIE x, y coordinates. It affects all colors except achromatic like white and gray. 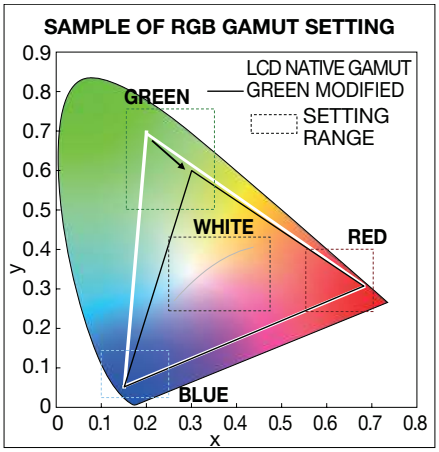

NOTE:
- Settings for [EMULATION], [6 AXIS COLOR TRIM], and [UNIFORMITY] are also stored to each [PICTURE MODE].
- If the ICC Profile on your computer doesn't match the monitor's settings then color reproduction may be inaccurate.

Setting Security and Locking the Monitor Controls

Under normal operation, the monitor can be controlled by any person using the Remote control unit or buttons or key on the monitor. You can prevent unauthorized use and changes to the monitor settings by enabling the options for Security and Lock Settings.

The security and locking functions covered in this section are:

- Setting the password
- Enabling password security
- Locking the Remote control unit buttons (See page 16)
- Locking the monitor buttons and key (See page 17)

Settings Location

The instructions in this section guide you through configuring security and locking functions in the monitor's OSD menu. These settings can also be configured using the monitor's web controls. See page 71.

The menu options for Security and Lock Settings are in the [PROTECT] menu in both the OSD menu and web controls.

■Password Security

When password security is enabled, a four-digit passcode is required when turning on the main power and/or accessing the OSD (see page 46). The monitor will function normally after the password is entered. If no buttons are pressed within three minutes, the monitor will return to SECURE MODE automatically, and the password will be required again.

TIP: If you change the password make a note of the password in a secure location. If you forget your password, you will need to contact technical support to get a recovery password to access the monitor's OSD menu.

Set a password for the monitor

This step is only required if you want to change the password.

1. **Using the Remote control unit, navigate to [PROTECT], then to [SECURITY SETTINGS].**
2. **Under [CHANGE PASSWORD], enter the password in the [CURRENT PASSWORD] field. (The default password is: 0 0 0 0).**
3. **Input a [NEW PASSWORD] and then input it again in the [CONFIRM PASSWORD] field.**
4. **The new password is immediately saved.**

Enable password security

1. **Using the Remote control unit, navigate to [PROTECT] then to [SECURITY SETTINGS].**
2. **Enter the password in the [PASSWORD] field to access the [SECURE MODE] settings.**
3. **Select the type of [SECURE MODE] you want to use:**

   [**START-UP LOCK**] – The password is required when turning on the monitor from the main power switch.

   When this option is selected, the password is only required on power cycle using the main power switch or after power failure. This option does not prompt for a password when using the Remote control unit POWER and STANDBY buttons or the power button on the monitor.

   [**CONTROL LOCK**] – The password is required to use any of the Remote control unit buttons or buttons on the monitor.
4. **Press MENU to close the OSD menu.**

   The settings are saved after closing the OSD menu.

■Locking the Button Controls

The lock settings prevent the monitor from responding to button presses on the Remote control unit or the rear side of the monitor. When locking the button controls, some buttons can be configured to remain unlocked for users to adjust the settings. Locking and unlocking the button controls do not require a password.

Locking the IR Remote Buttons

Locking

The [IR] option in the [LOCK SETTINGS] prevents the monitor from being controlled using the Remote control unit. Enabling [IR] does not lock the buttons and key on the monitor.

1. **Using the Remote control unit, navigate to [PROTECT], then to [LOCK SETTINGS].**
2. **Under the [SELECT] option, press the ▲, ▼ buttons to change the setting to [IR].**
3. **Under [MODE] choose the lock mode you want to enable.**

   [**UNLOCK**] – All buttons are unlocked.

   [**ALL LOCK**] – All buttons are locked.

   [**CUSTOM LOCK**] – All remote buttons are locked except for the following buttons that can be individually set as locked or unlocked.

   [**POWER**] – Select [UNLOCK] to be able to use the power button when the IR Remote is locked. Select [LOCK] to lock the button.

   [**VOLUME**] – Select [UNLOCK] to be able to control the volume with the VOL+/VOL– buttons when the IR Remote is locked. Select [LOCK] to prevent volume adjustment.

   [**MIN VOL**] and [**MAX VOL**] – The volume buttons are unlocked, and the volume level can only be adjusted within the [MIN] and [MAX] range set.

   The [VOLUME] must be set to [UNLOCK] for this setting to operate.

   TIP: Volume [MIN VOL]/[MAX VOL] lock only works with the Internal speaker and Audio output terminal (3.5 mm connector). It does not work when [AUDIO RECEIVER] is set to [ENABLE].

   [**INPUT**] – Select [UNLOCK] to unlock all input buttons. Select [LOCK] to lock all input buttons.
4. **Select [SET] to activate all settings.**

Unlocking

- Remote control unit – to return to normal operation, press-and-hold the DISPLAY button for at least 5 seconds.

Locking the rear side Buttons and Key

Locking

The [KEY] in the [LOCK SETTINGS] prevents the monitor from being controlled using the buttons and key on the monitor. Enabling the [KEY] does not lock the buttons on the Remote control unit.

1. **Using the Remote control unit, navigate to [PROTECT], then to [LOCK SETTINGS].**
2. **Under the [SELECT] option, press the ▲, ▼ buttons to change the setting to [KEY].**
3. **Under [MODE] choose the lock mode you want to enable.**

   [**UNLOCK**] – All keys are unlocked.

   [**ALL LOCK**] – All key buttons are locked.

   [**CUSTOM LOCK**] – All key buttons are locked except for the following buttons that can be individually set to be locked or unlocked.

   [**POWER**] – Select [UNLOCK] to be able to use the power button when the keys are locked.

   [**VOLUME**] – Select [UNLOCK] to be able to control the volume with the ◁/▷ keys when the keys are locked. Select [LOCK] to prevent volume adjustment.

   [**MIN VOL**] and [**MAX VOL**] – The ◁/▷ keys are unlocked and the volume can only be adjusted within the [MIN] and [MAX] range set.

   The [VOLUME] must be set to [UNLOCK] for this setting to operate.

   TIP: Volume [MIN VOL]/[MAX VOL] lock only works with the Internal speaker and Audio output terminal (3.5 mm connector). It does not work when [AUDIO RECEIVER] is set to [ENABLE].

   [**INPUT**] – Select [UNLOCK] to be able to change the inputs using the INPUT button.
4. **Select [SET] to activate all settings.**

Unlocking

Key/Buttons – To return to normal operation unlock all the buttons/keys on the monitor by pressing the SET button and MENU/EXIT button on the monitor at the same time for 3 seconds or longer.

- If unlocking while the monitor power is off, press the power button on the rear side of the monitor then press the SET and MENU/EXIT buttons at the same time for at least 3 seconds. The buttons and key on the rear side of the monitor are unlocked.
- If the [MODE] is [CUSTOM LOCK] and the [POWER] is [ENABLE], press the power button on the rear side of the monitor then wait until the monitor turns on. Press the SET button and the MENU/EXIT button at the same time for at least 3 seconds. The buttons and key on the rear side of the monitor are unlocked.

OSD Menu – To return to normal operation, use the Remote control unit, to navigate to [PROTECT] then to [LOCK SETTINGS]. Under the [SELECT] option, change the setting to [KEY]. Under [MODE] choose [UNLOCK] and then select [SET].

Locking the IR Remote Buttons and the rear side Buttons

Select [PROTECT] → [LOCK SETTINGS] → [SELECT] → [KEY & IR] from the OSD menu.

For the subsequent setting procedure, buttons/keys for which the lock is enabled, and unlocking method, refer to "Locking the IR Remote Buttons" and "Locking the rear side Buttons and Key".

Setting the Remote Control ID Function

The Remote control unit can be used to control up to 100 individual MultiSync monitors using what is called the REMOTE CONTROL ID mode. The REMOTE CONTROL ID mode works in conjunction with the Monitor ID, allowing control of up to 100 individual MultiSync monitors. For example, if there are many monitors being used in the same area, a Remote control unit in normal mode would send signals to every monitor at the same time (see **Figure 1**). Using the remote in REMOTE CONTROL ID mode will only operate one specific monitor within the group (see **Figure 2**).

To Set Remote Control ID (Entering REMOTE CONTROL ID mode)

While holding down the REMOTE ID SET button on the Remote control unit, use the KEYPAD to input the Monitor ID (1-100) of the monitor to be controlled via remote. The Remote control unit can then be used to operate the monitor having that specific Monitor ID number.

When 0 is selected or when the Remote control unit is in normal mode, all monitors will be operated.

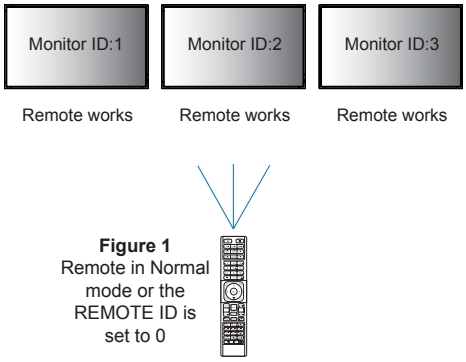

Figure 1
Remote in Normal mode or the REMOTE ID is set to 0

To Reset the REMOTE CONTROL ID mode

Normal Mode - To return to Normal Mode press the REMOTE ID CLEAR button and hold down for 5 seconds.

TIP:
- In order for this feature to work properly, the monitor must be assigned a Monitor ID number. The Monitor ID number can be assigned under the [SYSTEM] menu in the OSD. See page 48.
- Point the Remote control unit toward the remote sensor of the desired monitor and press the REMOTE ID SET button. The MONITOR ID number is shown on the screen when your Remote control unit is in ID mode.

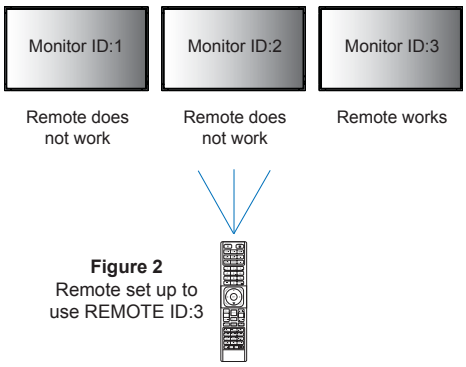

Figure 2
Remote set up to use REMOTE ID:3

You need a Remote control unit for this function.

Use the Remote control unit to Control all Monitors in Range

1. **On the Remote control unit, press and hold down the REMOTE ID SET button while using the keypad to input the REMOTE CONTROL ID number "0".**
2. **All monitors within range of the Remote control unit will now respond to keypad press.**

TIP: When the REMOTE ID is set to "0", pressing REMOTE ID SET will make all monitors, within range of the remote signal, show their Monitor ID on screen. This way you can easily see what the Monitor ID is if you want to control a single monitor, as described below.

Use the Remote control unit to operate a monitor that has a specific MONITOR ID number assigned to it

1. **Set the [MONITOR ID] number for the monitor (see page 48). The [MONITOR ID] number can range from 1-100.**

   This [MONITOR ID] number allows the Remote control unit to operate this specific monitor without affecting other monitors.

2. **On the Remote control unit, press and hold down the REMOTE ID SET button while using the keypad to input the REMOTE CONTROL ID number (1-100).**

   The REMOTE ID NUMBER should match the MONITOR ID number of the monitor to be controlled.

3. **Point the Remote control unit toward the remote sensor of the desired monitor and press the REMOTE ID SET button.**

   The MONITOR ID number is shown in red on the monitor.

   If the REMOTE CONTROL ID is “0”, then all monitors in range will show their particular MONITOR ID number in red.

   If the MONITOR ID number is shown in white on the monitor, the MONITOR ID number and the REMOTE CONTROL ID are not the same.

Connecting Multiple Monitors

Monitors can be connected to each other, both communication and video connections, in multiple monitor installations. Chaining the video connections together creates a video wall where a single image can be tiled across all monitors. When connecting multiple monitors to install a video wall, communication and video cable connections are necessary and their configuration must be carefully considered. Please refer to the “Connecting Peripheral Equipment” on page 18.

The monitor settings for configuring a video wall in the OSD and Monitor Web page settings are under the [PICTURE] and [SYSTEM] menus, respectively.

■AUTO TILE MATRIX

[AUTO TILE MATRIX] in [PICTURE-ADVANCED] automatically configures the multi-monitor settings when the communication and video ports are chained together. This automatically sets the [MONITOR ID] and position of the monitors in the video wall following the physical wiring between the monitors.

Input the number of monitors arranged horizontally and vertically on the master monitor. The following settings are set automatically when you run the auto setup: OSD menu [H MONITORS], [V MONITORS], [POSITION], [DisplayPort VERSION], [HDMI MODE], and Input signal.

TIP: • [MONITOR ID] in [AUTO ID/IP SETTING] will be automatically executed.

Example of installation via LAN:
H MONITORS 3
V MONITORS 3

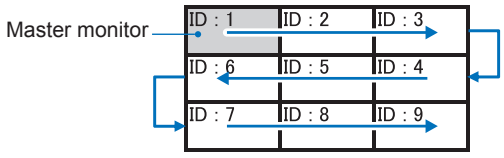

■TILE MATRIX

[TILE MATRIX] in [PICTURE-ADVANCED] allows one image to be expanded and shown over multiple screens (up to 100) through a distribution amplifier. Manually input the number of horizontal and vertical monitors in the video wall, position of the monitor in the wall, and turn on or off Tile Compensation. When tilting HDCP content, please refer to the "Video Out Connection" on page 66.

TIP: We strongly recommend using the same monitor model for all monitors in the connected daisy-chain.
[POSITION] needs to be changed manually. Please refer to the **figure 1**.
When in a portrait configuration, the cable connection order and the image position of the tile matrix are the same.

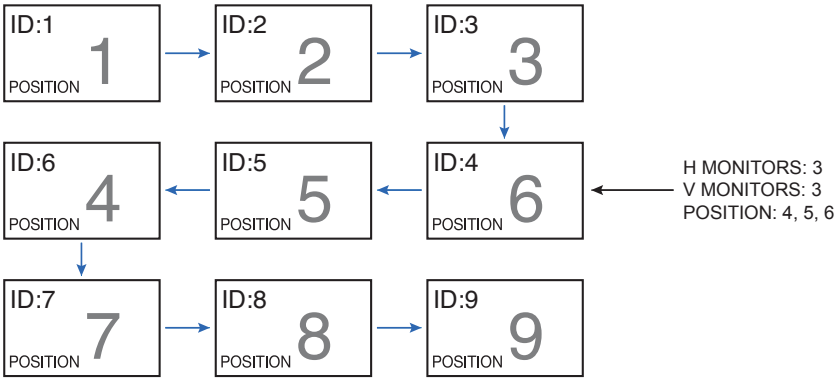

Figure 1

- [TILE COMP] - scales the image to compensate for the width of the screen bezel in order to create a seamless image.
- [TILE CUT] - select a part of an image to show in full-screen.

Example of TILE CUT 1x2 (Portrait configuration)

For the monitor on top:

1. **Set H MONITORS [2] and V MONITORS [2].**

   One image will be divided by 4 then put number from 1 to 4.

OSD

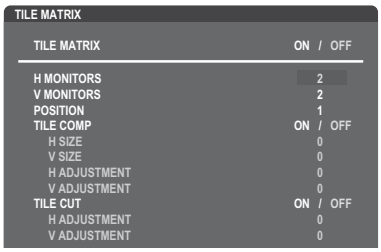

Monitor screen

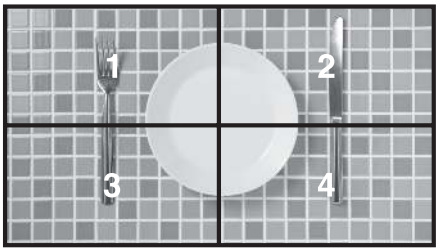

2. **Select 1 to 4 at [POSITION].**

e.g. Selecting 1

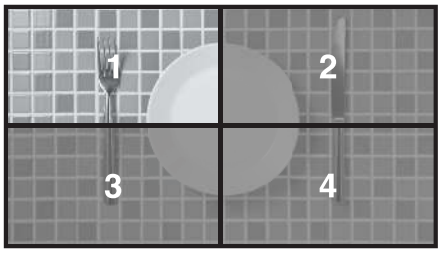

3. **With [H ADJUSTMENT] and [V ADJUSTMENT] in [TILE CUT], you can move the selected square to the exact spot you want shown.**

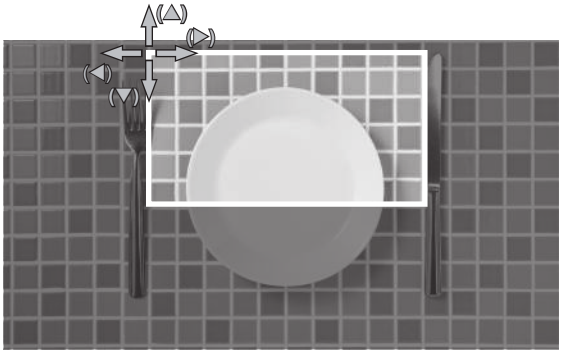

4. **Select [ON] at [TILE MATRIX].**

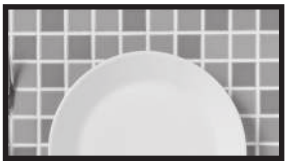

For the monitor at the bottom:
Repeat the same steps.

e.g. Selecting 3 at [POSITION]

After individually setting, the 1x2 image (Portrait configuration) will be shown as below.

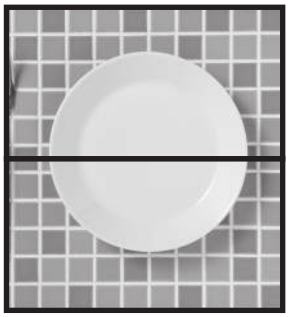

■EXTERNAL CONTROL

[EXTERNAL CONTROL] in [SYSTEM] sets the monitor ID and group IP for the current monitor. When the monitors' LAN ports are chained together, the ID and IP can be automatically assigned to all monitors.

■CLONE SETTING

[CLONE SETTING] in [SYSTEM] copies some of the OSD menu categories to other monitors in the video wall, when chained together.

Video Out Connection

Connector	DisplayPort	USB Type-C1 (Upstream)	HDMI1 (ARC)	HDMI2	Option Board	Raspberry Pi Compute Module
DisplayPort Out	Yes	Yes	No	No	No	No
HDMI Out	No	No	No	Yes*1	Yes*1	Yes*1

*1: When [MULTI PICTURE MODE] is set to [PIP] or [PBP], signal output is disabled.

TIP: • Use the same monitor model.

For connecting multiple monitors

Connecting with HDMI cable

- Set the same ([MODE1] or [MODE2]) at [HDMI MODE] in [INPUT-ADVANCED] in all connected multiple monitors.
- If output signal from HDMI output terminal, set input terminal “HDMI2”, “OPTION”, or “COMPUTE MODULE”.

For HDCP contents

This monitor’s signal output function supports contents protected by HDCP.

HDCP content can be distributed across multiple connected monitors as described below:

- HDCP1.3: Up to 8 monitors (including this monitor).
- HDCP2.2: Up to 5 monitors (including this monitor).

TIP:
- Do not turn the main power switch off/on or connect/disconnect the cable while playing HDCP-protected video content in a daisy chain connection. Playback of video content may stop. If playback stops, try playing again.
- Depending on the device you use, the number of supported monitor connections will change.
- When showing an image in a multi-monitor setting, do not disconnect cables from the monitors. When you disconnect cables, please turn the main power off first.

For non-HDCP contents

- Up to 9 monitors (including this monitor) can be connected.
- The time until image is shown depends on the number of connected monitors.

Controlling the Monitor with a computer (RS-232C)

This monitor can be controlled by connecting a personal computer with an RS-232C (reverse type) terminal.

The reverse type cable (null modem cable) (not included) should be used for RS-232C control.

For example, some of the functions that can be controlled by a personal computer are:

- Power ON or standby.
- Switching between input signals.
- Sound Mute ON or OFF.

Monitor and computer connection

- Please turn off the monitor's main power before connecting a computer to the monitor.
- Please turn on the connected computer first then turn on the monitor's main power.

  If you turn on the computer and monitor in reverse order, the com port may not work.

  To control the monitor via commands sent from a computer connected with an RS-232C cable, please use the control command. Instructions for the control command can be found in the "External_Control.pdf". See page 94.

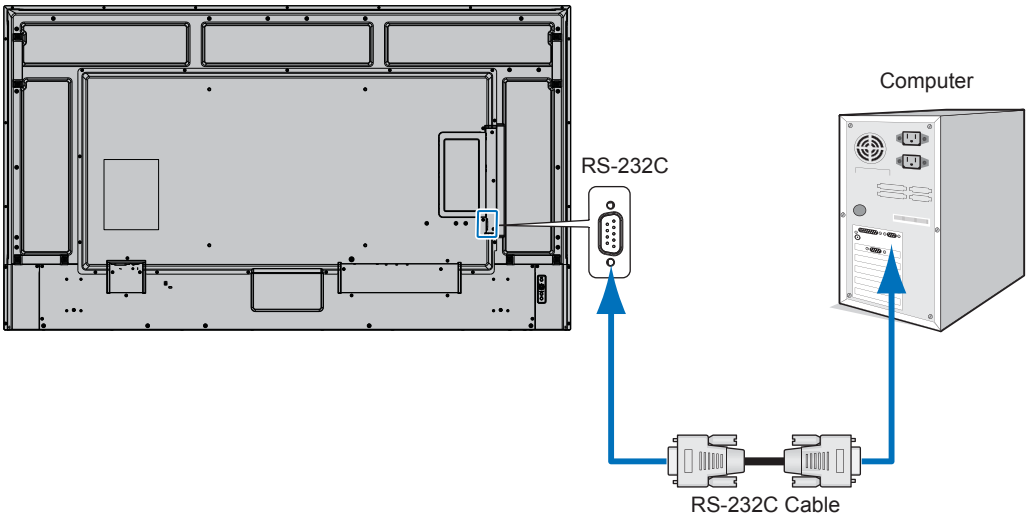

TIP:
- If your computer is equipped only with a 25-pin serial port connector, a 25-pin serial port adapter is required. Contact your supplier for details.
- For the pin assignment, please see "RS-232C input/output" on page 67.

PIN ASSIGNMENT

RS-232C input/output

Pin No	Name
1	NC
2	RXD
3	TXD
4	NC
5	GND
6	NC
7	NC
8	NC
9	NC

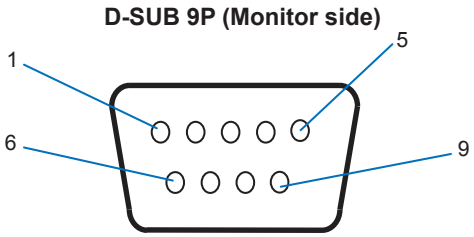

This monitor uses RXD, TXD and GND lines for RS-232C control.

Controlling the Monitor with a computer (LAN)

Connecting to a Network

Using a LAN cable (RJ-45 category 5 or higher) allows you to specify the monitor Settings by using an HTTP server function.

TIP: To use a LAN connection, you are required to assign an IP address (see page 43). The monitor will obtain an IP address automatically when connected to a DHCP network.

Example of LAN connection:

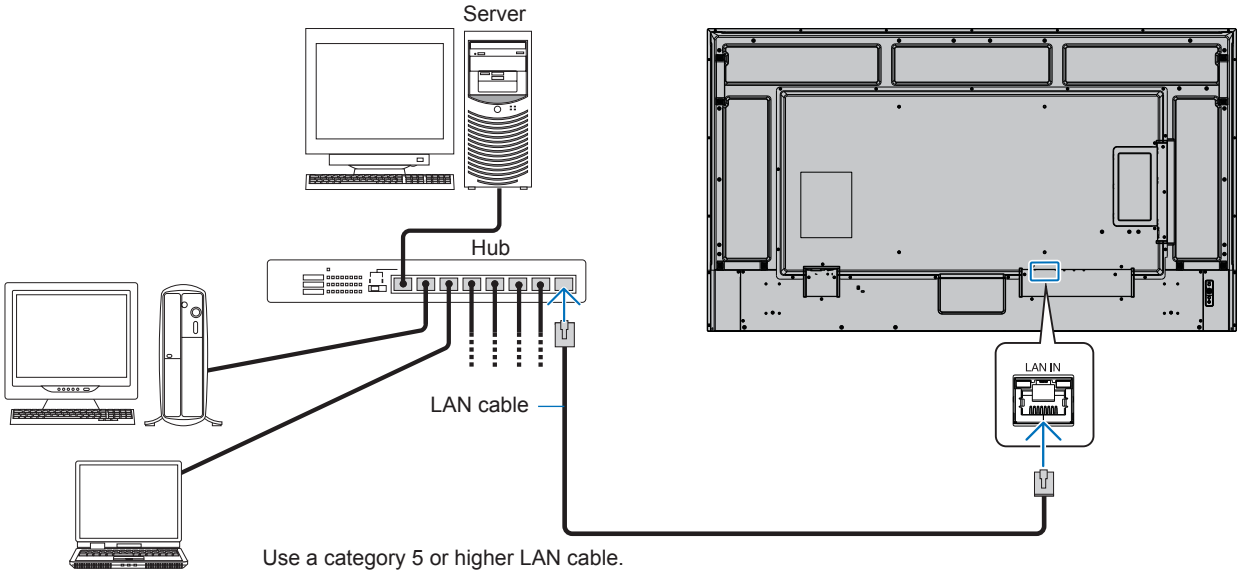

Securing personal information: Personally identifiable information, such as IP addresses, may be saved on the monitor. Before transferring or disposing of the monitor, clear this data by performing the FACTORY RESET function.

■Multiple Monitor Connection

You can control multiple monitors by using RS-232C, REMOTE or LAN daisy-chain connection.

NOTE:
- Up to 100 monitors can be daisy chained together.
- Please execute [AUTO ID/IP SETTING] to automatically assign unique IDs to each monitor (see page 48) before trying to control a monitor by manually specifying the ID number.

  Be careful not to make a loop connection on the network. A loop connection occurs when both LAN 1 and LAN 2 on a single monitor is connected to the same network.

  NOTE: In a LAN daisy-chain, only the first monitor should be connected to the network. All other monitors should be connected to each other. There should be no cable plugged into the LAN 2 port in the last monitor of the LAN daisy-chain.

Master Monitor		Sub Monitors	
Terminal		Terminal	
IN	OUT	IN	OUT
RS-232C REMOTE LAN1 (DAISY CHAIN IN)	LAN2 (DAISY CHAIN OUT)	LAN1 (DAISY CHAIN IN)	LAN2 (DAISY CHAIN OUT)

Connection

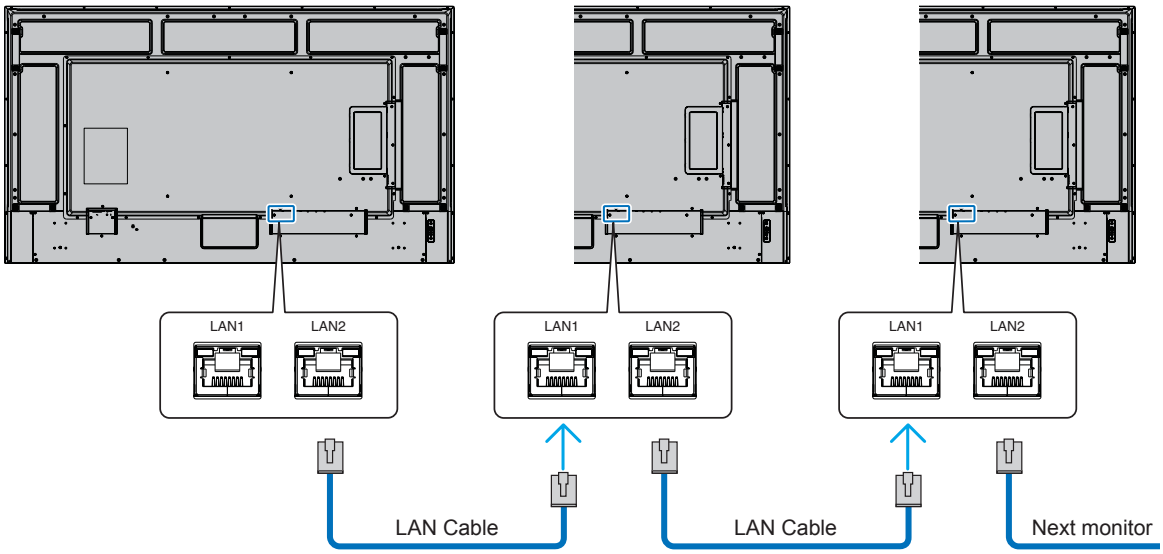

Controlling the Monitor with a computer (LAN)

■HTTP Browser

Overview

Connecting the monitor to a network allows for Remote control of the monitor from a computer connected to the same network.

This device uses “JavaScript” and “Cookies” and the browser should be set to accept these functions. Refer to the help files for the web browser to change the settings to use JavaScript and Cookies.

To access the HTTP server, launch a web browser on a computer connected to the same network as the monitor and enter the following URL in the web address field: https://<the Monitor’s IP address>/index.html

Network Setting

TIP:
- The default IP address is assigned automatically to the monitor.
- NaViSet Administrator software for managing monitors over the network is recommended.
- If the MONITOR NETWORK SETTINGS screen does not appear in the web browser, press the Ctrl+F5 keys to refresh your web browser (or clear the cache).
- If the monitor appears to be slow in response to commands or clicks on buttons in the browser, or the general speed of operation is unacceptable, this may be due to network traffic or the settings on your network. Should this happen, consult your network administrator.
- The monitor may not respond if the buttons shown on the browser are repeatedly pressed in rapid intervals. Should this happen, wait a moment and repeat. If you still can’t get a response, turn the monitor off and then back on.

Preparation Before Use

Operation with a browser that uses a proxy server may not be possible depending on the type of proxy server and the setting method. Although the type of proxy server will be a factor, it is possible that items that have been set will not be shown, depending on the effectiveness of the cache, and the contents set from the browser may not be reflected in operation. It is recommended that a proxy server is not used unless the network environment requires it.

Handling of the Address for Operation via a Browser

A Hostname can be used in the following cases (corresponding to the IP address of the monitor):

The Hostname must be registered in the domain name system (DNS) by the network administrator. You can then access the network settings of the monitor via this registered Hostname by using a compatible browser.

If the Hostname has been configured in the “HOSTS” file of the computer being used, you can then access the network settings of the monitor via this Hostname by using a compatible browser.

Example 1: When the Hostname of the monitor has been set to “pd.xxx.co.jp”, access is gained to the network setting by specifying https://pd.xxx.co.jp/index.html for the address or the entry column of the URL.

Example 2: When the IP address of the monitor is “192.168.73.1”, access is gained by specifying https://192.168.73.1/index.html for the address or the entry column of the URL.

Setup for first-time use of the HTTP server

ENTER NEW HTTP PASSWORD window opens when accessing the HTTP server for the first time.
Set a password for the HTTP server. The password can be max. 32 characters.

Operation

Access the following address to show HOME,

https://<the Monitor's IP address>/index.html

Click each link on the left-hand column below HOME.

REMOTE CONTROL

Enable an operation to control the monitor equivalent to the keys on the Remote control unit.

■OSD Menu Settings in the Monitor Web controls

Select one of the links on the left side of the monitor web controls to configure the settings available in the monitor's OSD. Please see page 29 for the full list of OSD menu controls.

[INPUT], [PICTURE], [AUDIO], [SCHEDULE], [SLOT], [NETWORK], [PROTECT], [SYSTEM]

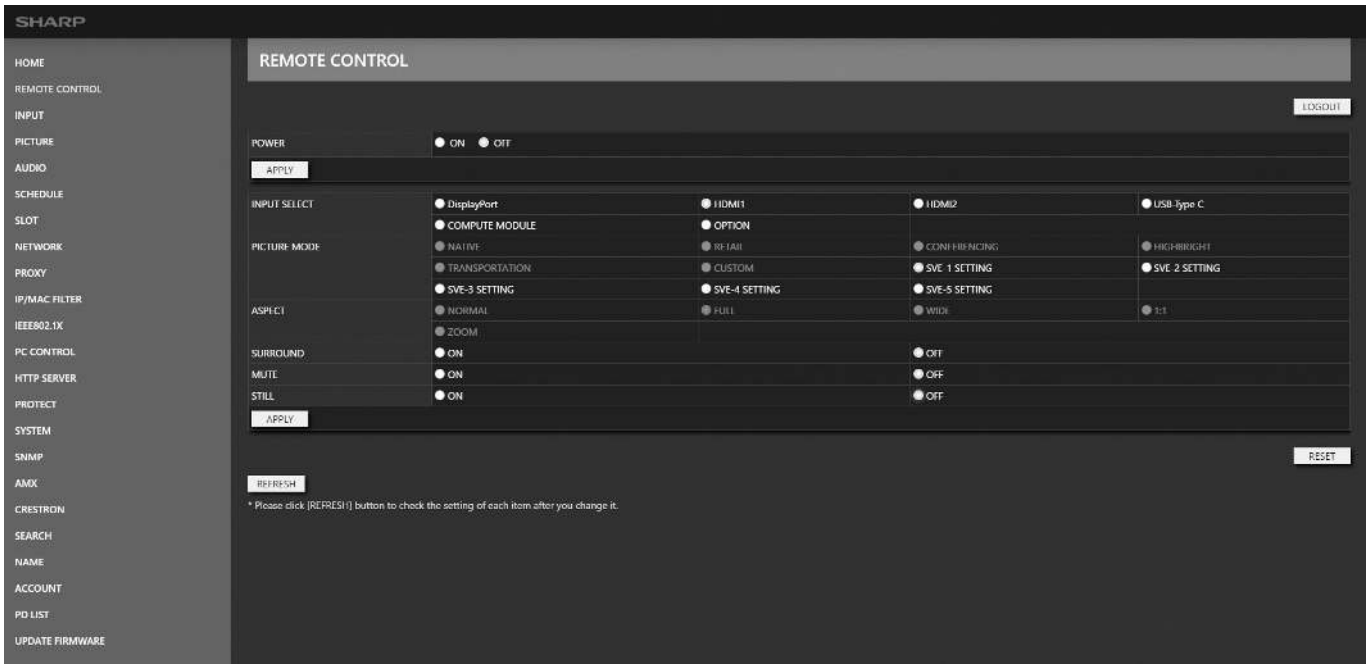

TIP: The buttons in the monitor web controls function as follows:

APPLY: Saves the settings.

CANCEL: Returns to the previous settings.
TIP: CANCEL is disabled after clicking APPLY.

RELOAD: Reloads the settings.

RESET: Resets to the initial settings.

■Network Settings

This screen allows you to set [Network Settings].

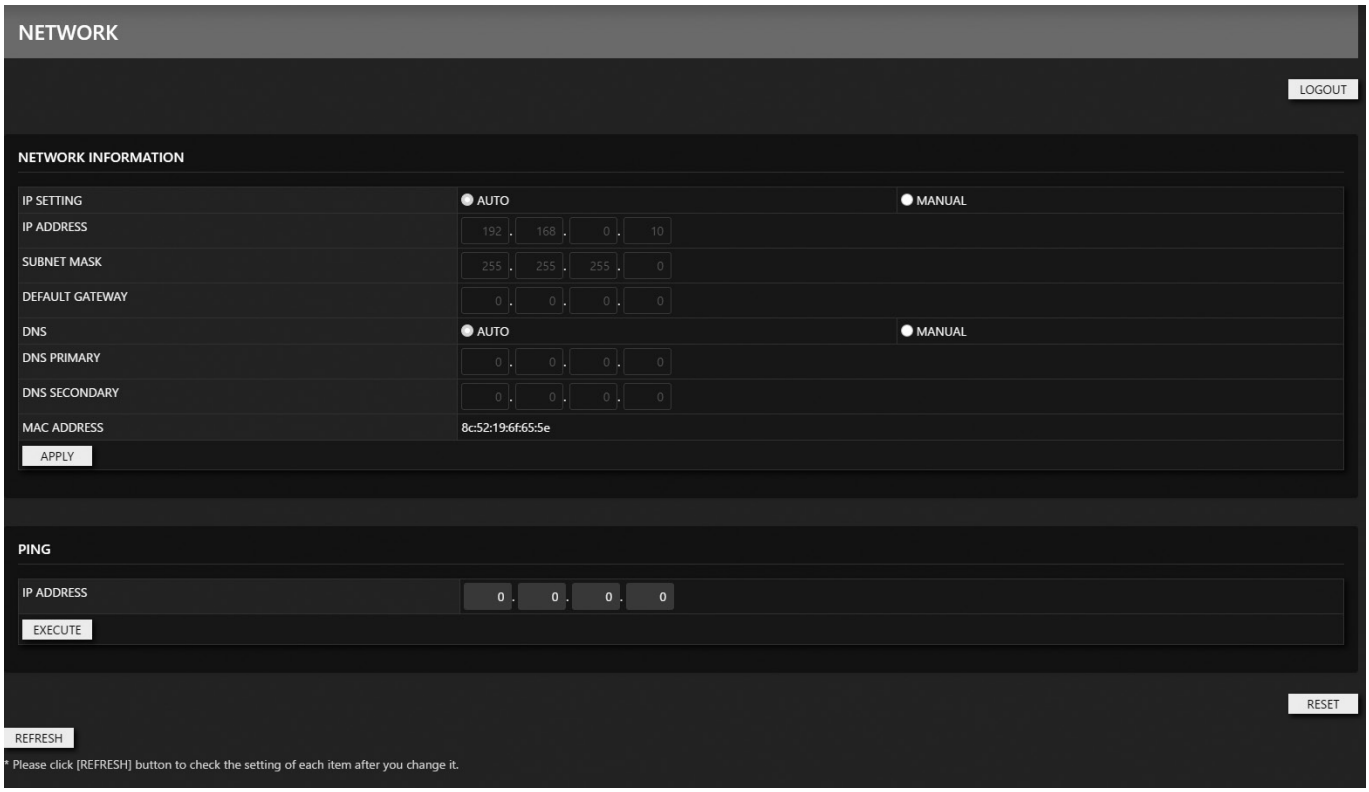

IP SETTING.....Select an option for setting the IP ADDRESS.
AUTO: Automatically assign an IP address.
MANUAL: Manually set an IP address for the monitor connected to the network.
TIP: Consult your network administrator if you have any trouble.

IP ADDRESS.....Set your IP address for the monitor connected to the network when [MANUAL] is selected for [IP SETTING].

SUBNET MASK.....Set your subnet mask data for the monitor connected to the network when [MANUAL] is selected for [IP SETTING].

DEFAULT GATEWAY .....Set your default gateway for the monitor connected to the network when [MANUAL] is selected for [IP SETTING].
TIP: Set as [0.0.0.0] to delete the setting.

DNS.....Set for IP ADDRESS setting of DNS server.
AUTO: The DNS server connected to the monitor will automatically assign its IP address.
MANUAL: Manually enter the IP address of the DNS server that is connected to the monitor.

DNS PRIMARY.....Enter the primary DNS server settings of the network connected to the monitor.
TIP: Enter [0.0.0.0] to delete the setting.

DNS SECONDARY .....Enter the secondary DNS server settings of the network connected to the monitor.
TIP: Enter [0.0.0.0] to delete the setting.

■PROXY

This screen allows you to specify the [PROXY] settings.

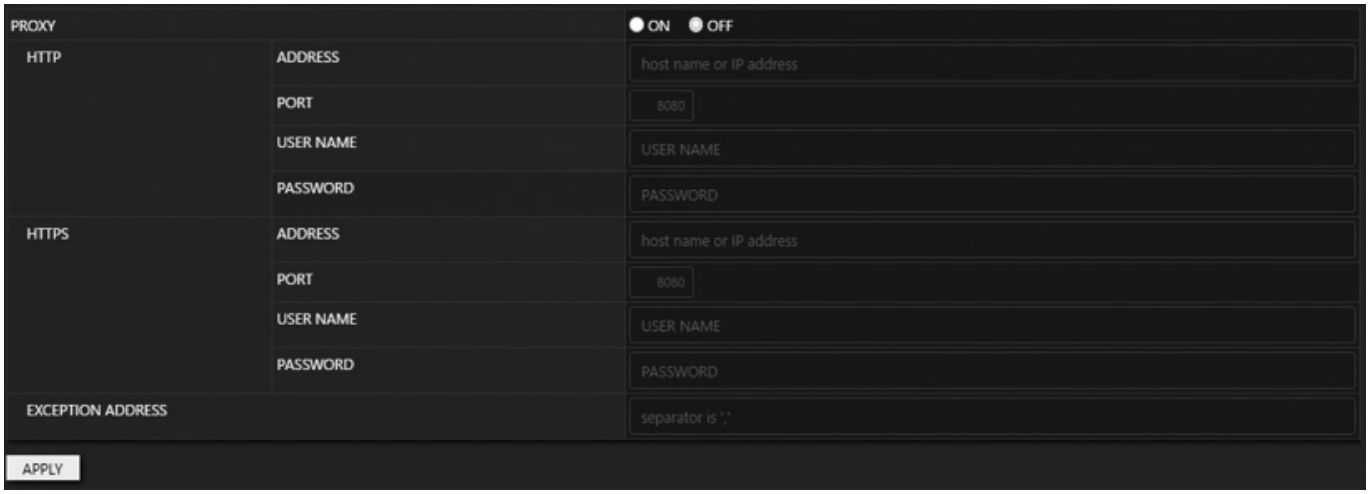

PROXY.....Set this setting if the PROXY needs to be authorized when connecting to the Internet. When connected to the Internet, the firmware network update function is available.

- HTTP: Configure the HTTP proxy server settings required to access the Internet.
- HTTPS: Configure the HTTPS proxy server settings required to access the Internet.
- EXCEPTION ADDRESS: Set the addresses for which no proxy server is used. When entering multiple addresses, separate them with “,”.

■IP/MAC FILTER

This screen allows you to configure the [FILTER SETTING], [IP ADDRESS FILTER SETTING], and [MAC ADDRESS FILTER SETTING].

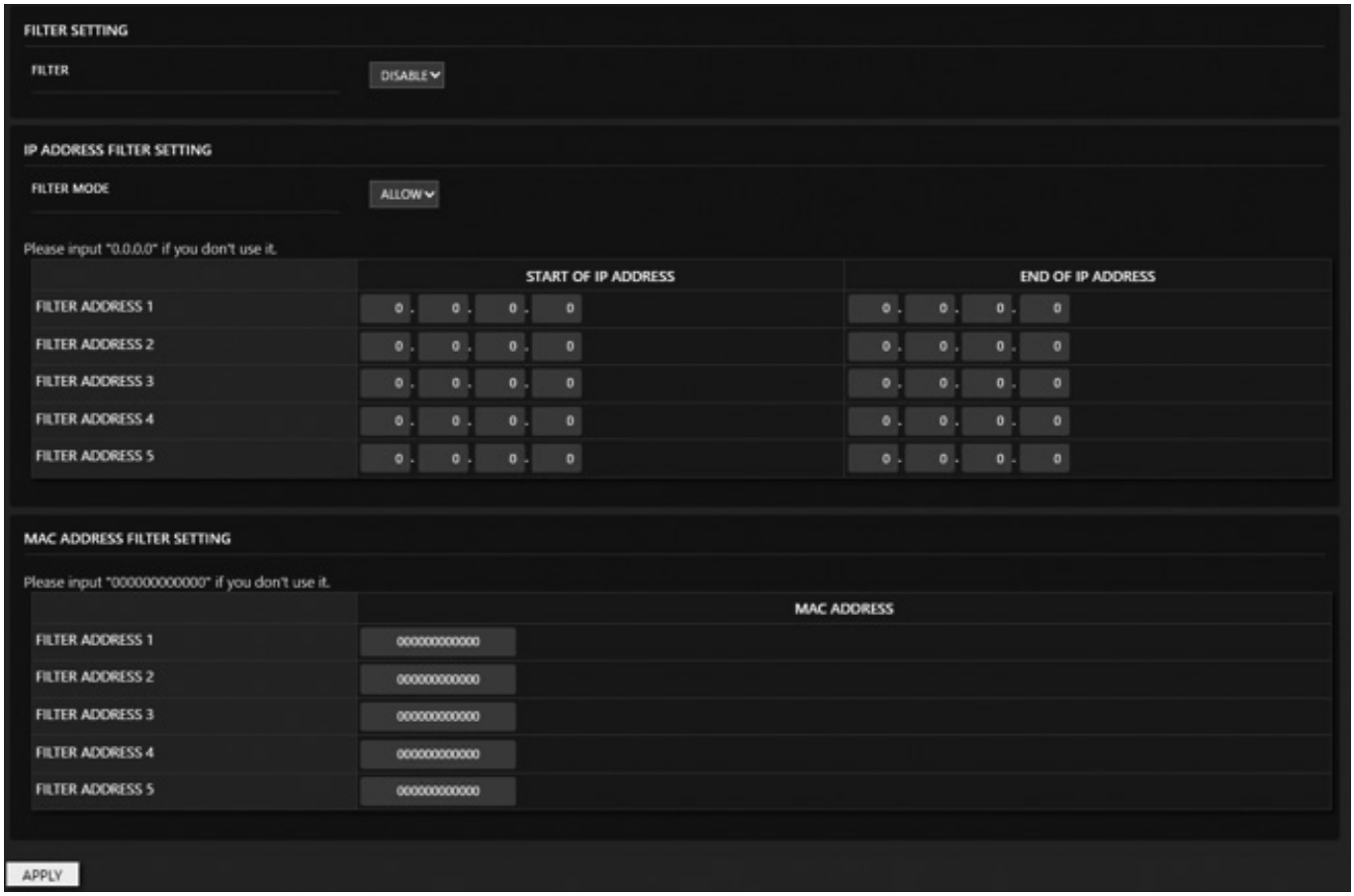

FILTER SETTING.....Set whether to use IP/MAC filter.

IP ADDRESS FILTER SETTING .....Allows or denies IP addresses between the starting address and the ending address.
5 types of settings are available.
The mode [ALLOW] specifies the addresses to be allowed and [DENY] specifies the addresses to be denied.

MAC ADDRESS FILTER SETTING.....In [MAC ADDRESS FILTER SETTING], 5 MAC ADDRESSES can be set to be permitted.

TIP:
- If [MAC ADDRESS FILTER SETTING] is used in conjunction with [ALLOW] in the [IP ADDRESS FILTER SETTING], both specified addresses are allowed to connect.
- If [MAC ADDRESS FILTER SETTING] is used in conjunction with [DENY] in the [IP ADDRESS FILTER SETTING], conjunctions are allowed only if the IP ADDRESS assigned to the MAC ADDRESS is outside the range of [IP ADDRESS FILTER SETING] among the specified MAC ADDRESS.

■IEEE802.1X SETTINGS

This screen allows you to set [IEEE802.1X].
[IEEE802.1X] can be used to authenticate a user to allow use of the machine.
Use IEEE802.1X authentication to allow only authenticated devices to use the network and protect against network abuse by third parties.

TIP: The OSD menu settings [IEEE802.1X] under [SYSTEM] and [AUTHENTICATION] under [IEEE802.1X] synchronize.
If [AUTHENTICATION] is accidentally enabled in the HTTP server then blocked from the network, set [DISABLE] in the OSD menu [IEEE802.1X] under [SYSTEM].

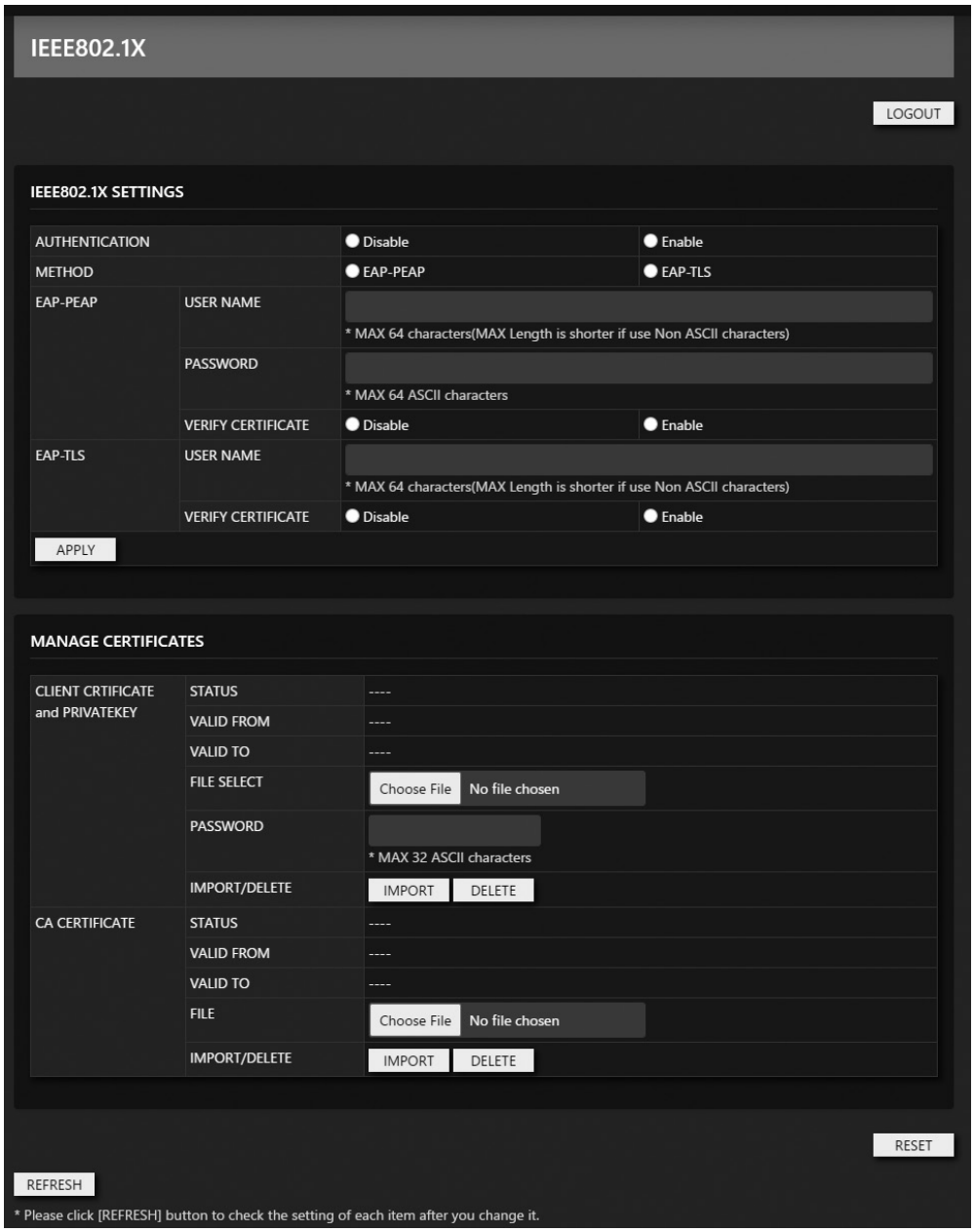

AUTHENTICATION

Set whether to use authentication using IEEE802.1X.

METHOD

Set the EAP authentication method in IEEE802.1X.

EAP-PEAP

EAP-PEAP (Protected Extensible Authentication Protocol) - encapsulates EAP within a TLS tunnel, providing secure authentication. It is commonly used when a server-side certificate is deployed to authenticate the server to the client, but client-side certificates are not required.

USER NAME ..... Enter the EAP-PEAP user name for authenticating.

PASSWORD ..... Enter the EAP-PEAP password for authentication.

VERIFY CERTIFICATE ..... Sets whether to validate EAP server certificates with CA certificates.

EAP-TLS

EAP-TLS (Transport Layer Security) - uses mutual authentication via client and server certificates. It requires both the server and the client to have certificates, which can make setup more complex but provide higher security.

USER NAME ..... Enter the EAP-TLS password for authentication.

VERIFY CERTIFICATE ..... Sets whether to validate EAP-TLS server certificates with CA certificates.

MANAGE CERTIFICATES

There are two types of certificates.

CLIENT CERTIFICATE is compatible with PFX format (PKCS#12). This certificate is used for EAP-TLS.

CA CERTIFICATE is for the IEEE802.1X server that can be installed.

The CA certificate uses the BASE64 encoded PEM format (pem extension) file.

TIP: Only one certificate is saved to the monitor. Only the most recently installed one is available if you install both certificates.

CLIENT CERTIFICATE and PRIVATE KEY

STATUS ..... Shows the installation status of the client certificate.

VALID FROM
VALID TO..... Shows the valid date of the client certificate.
Setting of the [DATE & TIME] in [SYSTEM] is required for this function.

FILE SELECT ..... Select the [Choose File] button to open the Explorer and select the file for import.

PASSWORD ..... Enter a password to install a certificate. Up to 32 alphanumeric characters can be used.

IMPORT/DELETE..... Imports a selected file to the monitor or deletes the selected file.

CA CERTIFICATE

STATUS ..... Shows the installation status of the CA certificate.

VALID FROM
VALID TO..... Shows the expiration date of the CA certificate.
Setting of the [DATE & TIME] in [SYSTEM] is required for this function.

FILE ..... Select the [Choose File] button to open the Explorer and select the file for import.

IMPORT/DELETE..... Imports a selected file to the monitor or deletes the selected file.

■PC CONTROL

This screen allows you to configure the [PC CONTROL] setting.

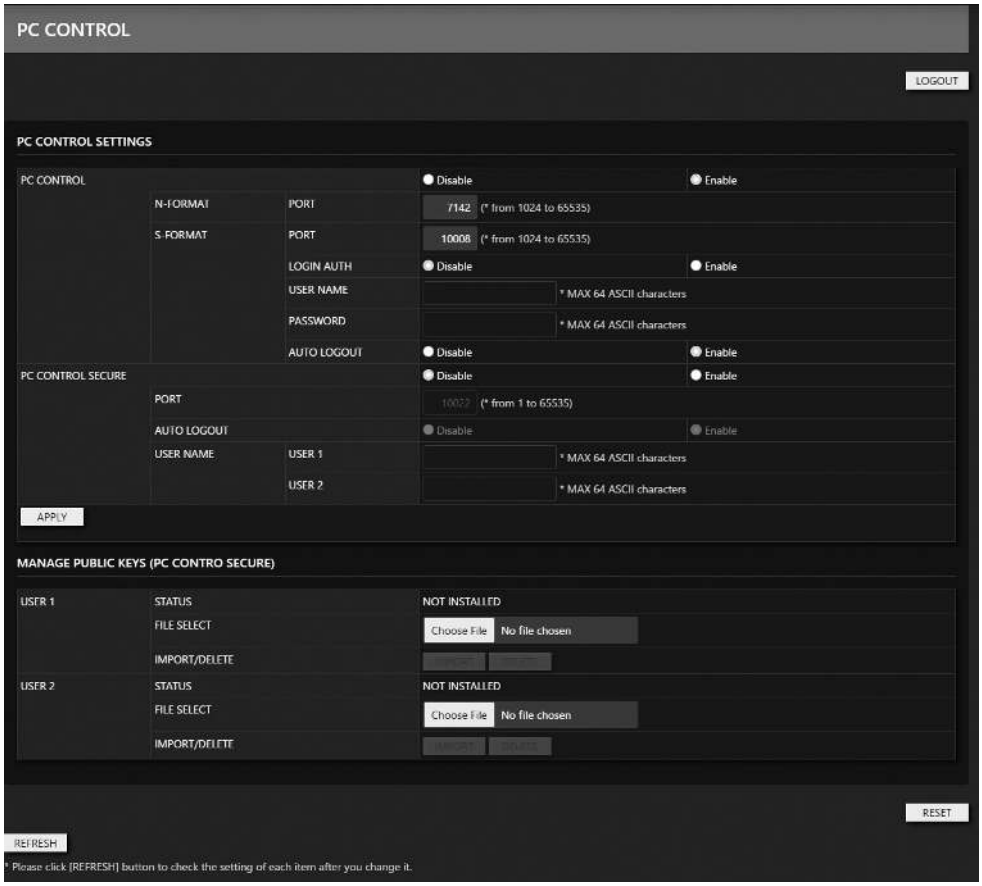

PC CONTROL

Set whether to use control commands over a LAN.

N-FORMAT

PORT.....Sets the port number to be used by the N-FORMAT command when using normal communication control.

S-FORMAT

PORT.....Sets the port number to be used by the S-FORMAT command when using normal communication control.

LOGIN AUTHENTICATION .....Sets whether login authentication is used when using the S-FORMAT command. When login authentication is used, the value set in [USER NAME/PASSWORD] is used for user authentication.

USER NAME .....Sets the user name used for user authentication.

PASSWORD.....Sets the password used for user authentication. In the initial settings, the password is set when you turn on the power for the first time.

AUTO LOGOUT .....Sets whether the connection is disconnected when no control commands are received for a period of 15 minutes after connecting.

PC CONTROL SECURE

Sets whether user authentication and encrypted communication is carried out using public key cryptography.

PORT..... Set the port number to be used by the N-FORMAT/S-FORMAT commands when using communication control by secure protocol.

AUTO LOGOUT ..... Sets whether the connection is disconnected when no control commands are received for a period of 15 minutes after connecting.

USER NAME ..... Sets the user name used for user authentication.

MANAGE PUBLIC KEYS (PC CONTROL SECURE)

Manages public keys for the use of secure protocol.

FILE SELECT..... Set the public key to be registered with this monitor.

IMPORT/DELETE..... Imports a selected file to the monitor or deletes the selected file.

■HTTP SERVER

This screen allows you to install “certificates” for HTTP SERVER and HTTP CLIENT.

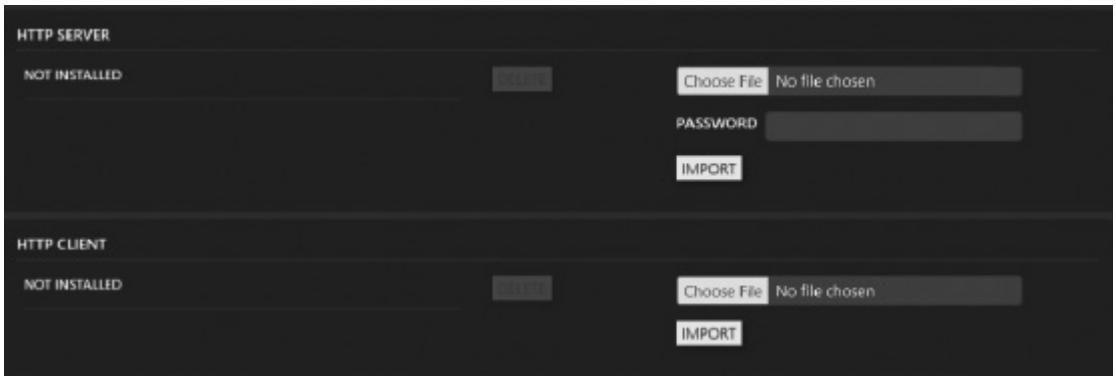

HTTP SERVER SETTINGS

Set whether to use HTTP, HTTPS, REST API.

MANAGE CERTIFICATES

HTTP SERVER ..... When the product is shipped, the HTTP server uses a dummy server certificate and a security warning is issued.
The certificate can be installed when the user has obtained the certificate. The format is a PKCS#12 (pfx extension) file.

HTTP CLIENT ..... Install a CA certificate when a CA server certificate is used for the internet connection environment. The format is PEM format (pem extension).

■SNMP SETTINGS

This screen allows you to set SNMP settings.
SNMP is a network management protocol used to communicate with the monitor.
Set whether to use SNMP function.

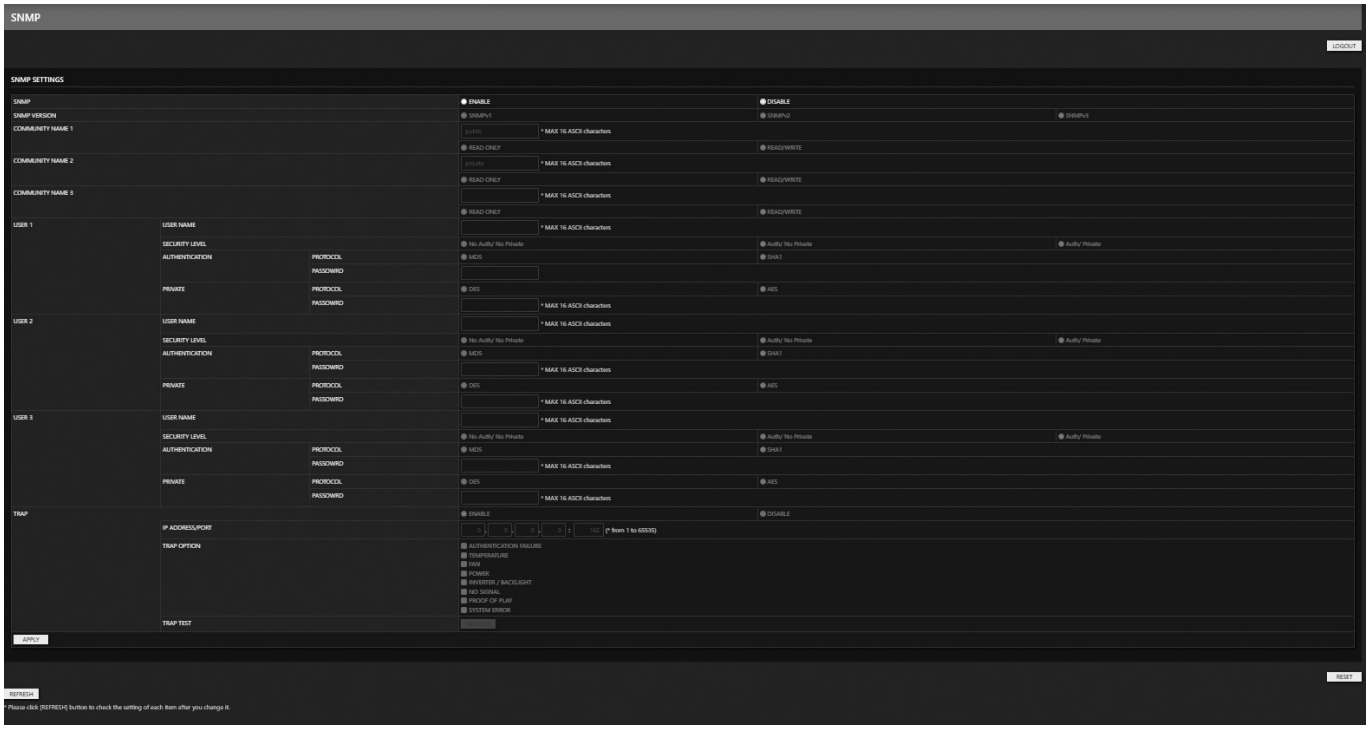

SNMP VERSION

SNMP v1, SNMP v2c: It does not authenticate or encrypt messages by the community.

SNMP v3: User authentication and message encryption are performed using an authentication protocol.

COMMUNITY NAME

Set the name and access type of the group to be managed by SNMP.
The default setting of the community name is “public”.

READ ONLY .....READ ONLY only allows you to read information.
READ/WRITE .....READ/WRITE allows you to read and write information.

When ”SNMP v3” is selected in “Version”, configure the settings below.

USER NAME 1-3

USER1 to 3 can be registered.

USER NAME .....Configure the username to be used in SNMPv3.
SECURITY LEVEL .....Set the security level.

SECURITY LEVEL	Authentication protocol	Message encryption
No Auth/No Private	No (User name)	No
Auth/No Private	MD5 or SHA1	No
Auth/Private	MD5 or SHA1	DES or AES

AUTHENTICATION

Set the authentication protocol and password.

PRIVATE

Set privacy protocols and passwords.

TRAP

Enables or disables the trapping feature.
If enabled, the item set by TRAP OPTION will be notified.

IP/ADDRESS/PORT ..... Set the notification destination address and port number for the trap function.

TRAP OPTION ..... Set the events to be notified by the trap function.

TRAP TEST ..... Send tests to the recipients.

■AMX Settings

This screen allows you to set AMX settings.

AMX BEACON..... Set whether to use detection from AMX Device Discovery when connecting to a network supported by an AMX's NetLinx control system.
TIP:
When using a device that supports AMX Device Discovery, all AMX NetLinx control systems will recognize the device and download the appropriate Device Discovery Module from an AMX server.
Selecting [ENABLE] AMX Device Discovery will detect the device.
Selecting [DISABLE] AMX Device Discovery will not detect the device.

■SEARCH SETTINGS

This screen allows you to set [SEARCH SETTINGS].

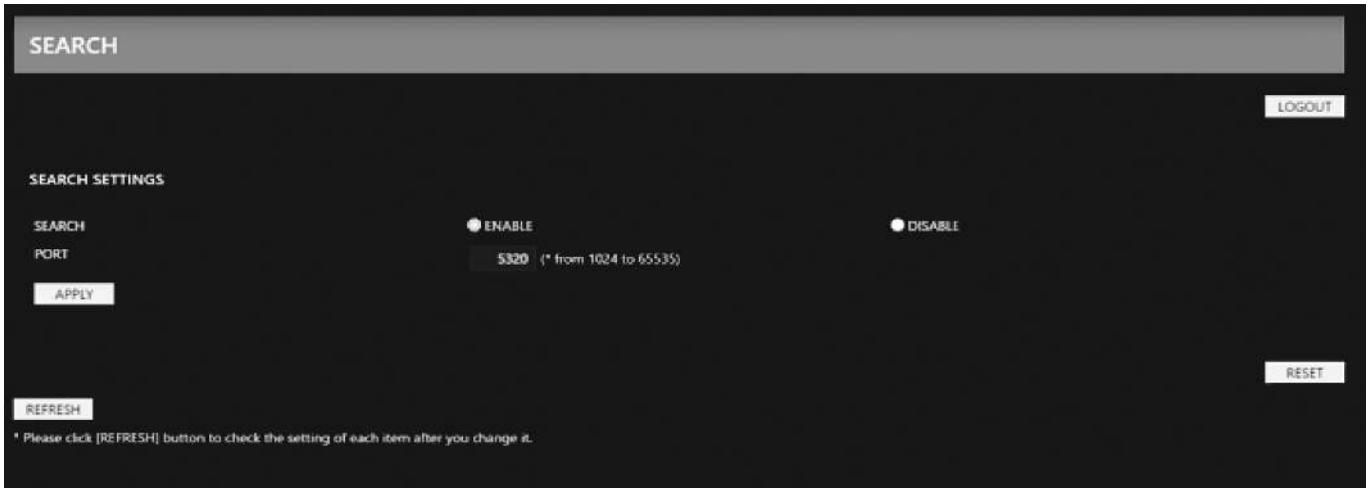

SEARCH..... Set whether to use the [SEARCH] function.
Enable this function when using the [AUTO ID/IP SETTING] or when searching for devices on the same network in the application.

PORT..... Set the UDP port number to be searched.
Normally, please use the default value.

■Name SETTINGS

This screen allows you to set NAME SETTINGS.

MONITOR NAME ..... Allows you to customize the monitor's name, up to a maximum of 16 characters long. This name is shown when searching for devices on the network when using an application such as NaViSet Administrator. Giving the monitor a unique name allows it to be easily identified when viewing a list of monitors on the network. The default name is the monitor's model name.

HOST NAME ..... Type in the hostname of the network to the monitor.
Up to 15 alphanumeric characters can be used.

DOMAIN NAME..... Type in the domain name of the network which is connected with the monitor.
Up to 60 alphanumeric characters can be used.

■ACCOUNT

This screen allows you to set the [ACCOUNT] settings.

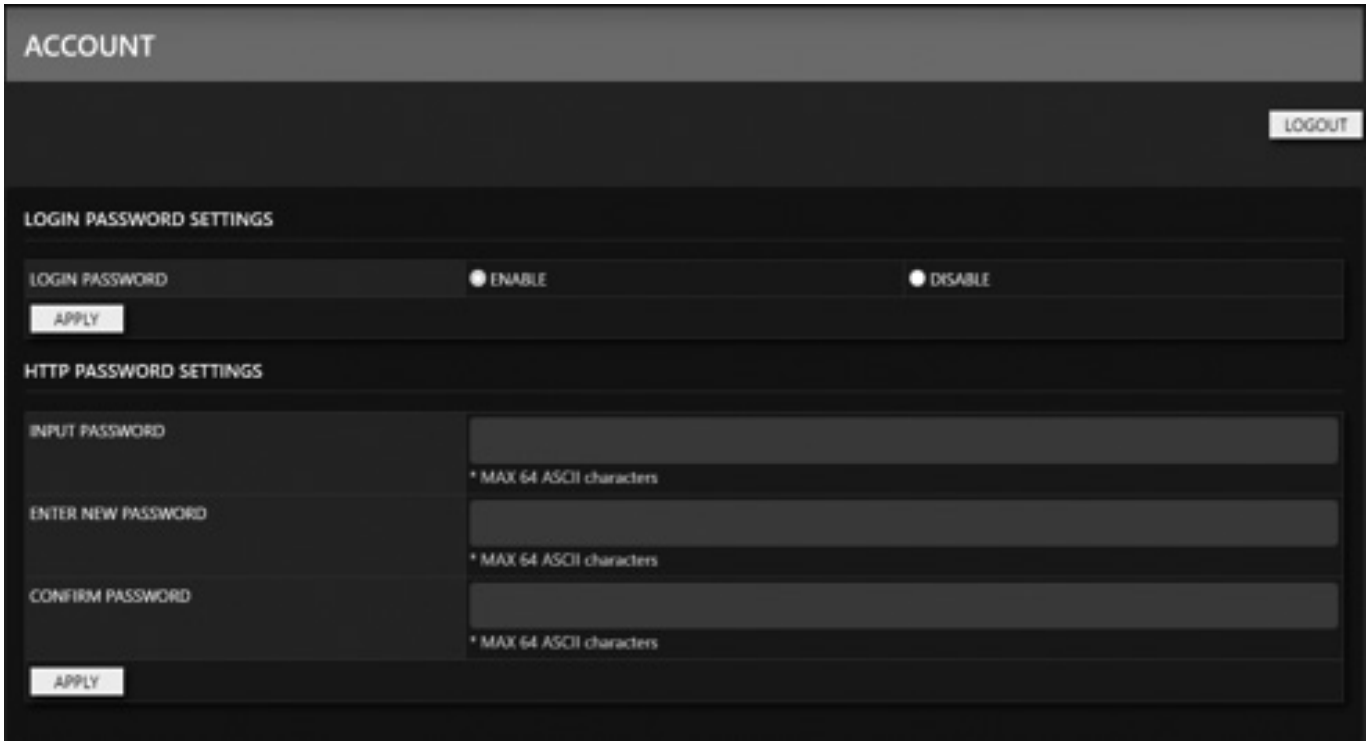

LOGIN PASSWORD SETTINGS.....This setting allows you to configure the PASSWORD.
LOGIN PASSWORD.....Enables or disables a password to access to this monitor.
HTTP PASSWORD SETTINGS .....Sets up a password to access to this monitor.

■PD LIST Information

This screen shows a list of monitor IDs and IP addresses of multiple monitors which are daisy-chained.

NOTE: Only the master monitor can show the list.

■UPDATE FIRMWARE

This screen allows you to set the [UPDATE FIRMWARE] settings.
Update to the latest firmware via the Internet.

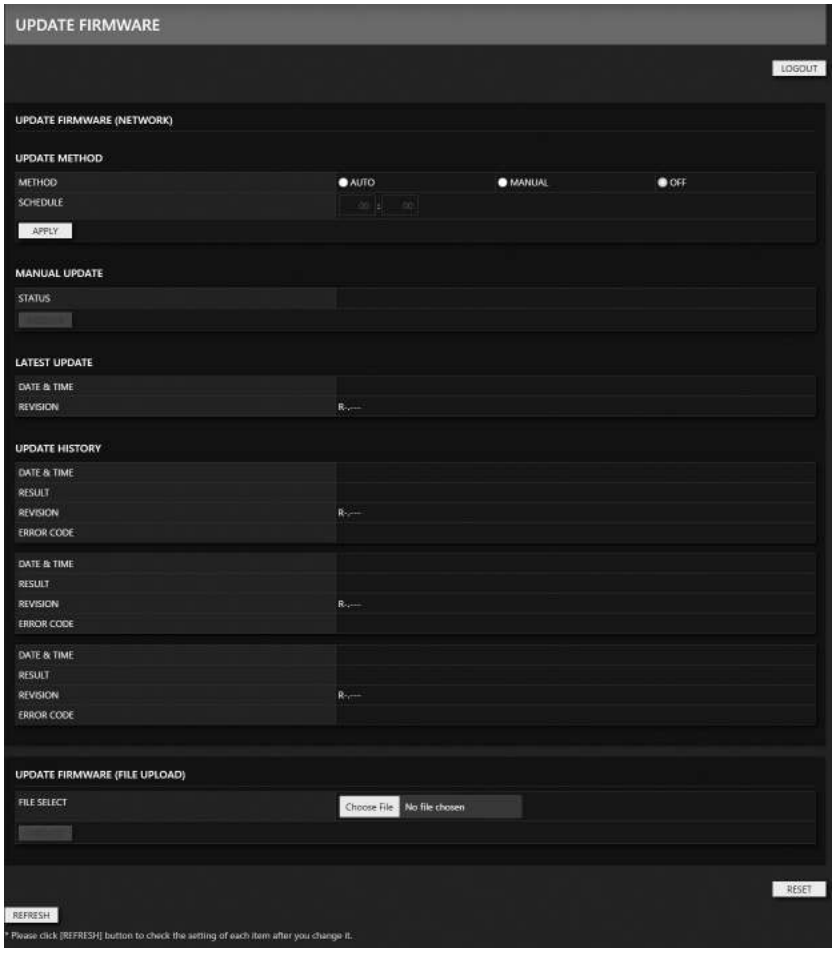

UPDATE FIRMWARE (NETWORK)

UPDATE METHOD

METHOD

AUTO.....Set it to update to the latest firmware via the Internet at the specified time.
If the latest firmware is detected, a firmware update is performed.

MANUAL.....Set to check if the latest firmware is available via the Internet at the specified time.
If the latest firmware is detected, “MANUAL UPDATE” will indicate that a firmware update is available.
No firmware update will be performed.

OFF .....Do not update to the latest firmware via the Internet.

SCHEDULE

If you set “AUTO” or “MANUAL” in “METHOD”, check if the latest firmware is available at the set time.

MANUAL UPDATE .....Check for the latest firmware over the Internet.
If the latest firmware is detected, the firmware can be updated.

LATEST UPDATE.....Shows the date and revision of the last firmware update over the Internet.

UPDATE HISTORY .....Shows the history of the last 3 firmware updates via the Internet.

UPDATE FIRMWARE (FILE UPLOAD)

FILE SELECT.....You can upload the latest firmware file to perform a firmware update.
Please download the latest firmware file from our website.

Commands

Connecting the monitor with RS-232C or connecting to a network via LAN, the control commands transmit and receive between the monitor and a connected device. It allows for Remote control of the monitor from a connected device.
Instructions for both control command types can be found in the external documents.

For details of each command, see the manual on the following website.

https://www.sharp-nec-displays.com/global/index.html

RS-232C Interface

PROTOCOL	RS-232C
BAUD RATE	9600 [bps]
DATA LENGTH	8 [bits]
PARITY	NONE
STOP BIT	1 [bit]
FLOW CONTROL	NONE

LAN Interface

PROTOCOL	TCP
PORT NUMBER	7142
COMMUNICATION SPEED	AUTO setting (10/100Mbps)

ASCII Control command

This monitor supports control command, which is listed in the “External_Control.pdf” (See page 94), but also supports common ASCII control command, which is used for controlling the monitor from a connected computer. For further information please visit our website.

Parameter

Input command

Input signal name	Response	Parameter
HDMI1	hdmi1	hdmi1 or hdmi
HDMI2	hdmi2	hdmi2
DisplayPort	displayport	displayport
USB Type-C1 (upstream)	usb-c	usb-c
OPTION*	option	option
COMPUTE MODULE*	compute_module	compute_module

Status command

Response	Error status
error:temp	Temperature abnormal
error:fan	Cooling fan abnormal
error:light	Inverter or backlight abnormal
error:system	System error

*1: This function depends on which Option Board is installed in the monitor.
*2: This input is available when the optional Raspberry Pi Compute Module Interface Board and Raspberry Pi Compute Module are installed.

Proof of Play

This function allows sending of messages for the current status of the monitor by self-diagnosis.
For the Proof of Play function including self-diagnosis, please see the “External_Control.pdf”. See page 94.

Check item		Message
①	INPUT	DisplayPort/USB-C/HDMI1/HDMI2/OPTION*/COMPUTE MODULE*[1]
②	Resolution	e.g. (H)1920, (V)1080, (H)3840, (V)2160 or No signal or Invalid signal
③	Audio signal	Audio in or No Audio in or N/A
④	Picture Image	Normal Picture or No Picture
⑤	AUDIO OUT	Normal Audio or No Audio
⑥	TIME	(year)/(month)/(day)/(hour)/(minutes)/(second)
⑦	EXPANSION DATA	00h: Normal Proof of Play event 01h: Proof of Play event is “last power on time” 20h: Contents Copy from USB 21h: Contents Copy form network folder 30h: Contents Copy Success 31h: Contents Copy Error (No media) 32h: Contents Copy Error (Connect error) 33h: Contents Copy Error (Out of disk space) 34h: Contents Copy Error (Read/Write error) 40h: Human detected (Human sensor Status) 41h: Human detect cleared (Human Sensor Status)

*: This function depends on which Option Board is installed in the monitor.
*[1]: This input is available when the optional Raspberry Pi Compute Module Interface Board and Raspberry Pi Compute Module are installed.

Example:

① HDMI1
② 3840 x 2160
③ Audio in
④ Normal Picture
⑤ Normal Audio
⑥ 2024/1/1/0h/0m/0s
⑦ 30h: Contents Copy Success

Troubleshooting

Screen Image and Video Signal Issues

No picture

- The signal cable should be completely connected to the display card/computer.
- The display card should be completely seated in its slot.
- Check the main Power Switch, it should be in the ON position.
- Make sure both the computer and monitor are powered on.
- Make sure that a supported resolution has been selected on the display card or system being used. If in doubt, please refer to the user's manual of the display controller or system to change the resolution.
- Check the monitor and your display card with respect to compatibility and recommended signal timings.
- Check the signal cable connector for bent or pushed-in pins.
- The monitor automatically goes into standby at the preset time period after the video signal is lost. Press the power button on the Remote control unit or the monitor.
- If you unplug the signal cable when starting the computer, images may not be shown. Turn off the monitor and the computer and then connect the signal cable and turn on the computer and the monitor.
- Check for HDCP (High-bandwidth Digital Content Protection) content. HDCP is a system for preventing illegal copying of video data sent over a digital signal. If you are unable to view material via the digital inputs, this does not necessarily mean that the monitor is not functioning properly. With the implementation of HDCP, there may be cases in which certain content is protected by HDCP and might not be shown due to the decision/ intention of the HDCP community (Digital Content Protection, LLC).
- Some Option Boards are not compatible to the monitor. Please contact your supplier for a list of compatible Option Boards.
- Make sure that a USB-C cable connects to the USB Type-C1 (Upstream) port. If the cable is connected to the USB Type-C2 (Downstream) port, image is not displayed.
- When the input is USB Type-C1 (upstream), if the Power LED is glowing or blinking amber, an image cannot be shown even if inputs an input signal. If turning on the monitor by a signal input, set the [QUICK START] to [ENABLE]. If the [QUICK START] is disabled, turn on the monitor by using the remote control unit or the buttons on the monitor.

Image persistence

- Do not display a still picture for a long period, as this could cause a residual image.

TIP: As with all personal display devices, we recommend showing moving images, or changing still images at regular intervals whenever the screen is idle, or putting the monitor into standby or turning it off when not in use.

The image is blinking

- If you use a signal repeater or distributor or a long cable, this may cause image roughness or blink for a moment. In this case please connect the cable to the monitor directly without using a repeater or a distributor, or replace the cable with a higher quality cable. Using a twisted pair extender may cause image roughness depending on the environment where the monitor is in or the cable you are using. For further information please ask your supplier.
- Some HDMI cables may not show a correct image. If input resolution is 3840 x 2160 or 4096 x 2160, please use an HDMI cable which is approved to support 4K resolution.
- If external noise is affected, please use shielded cables.

The image is unstable, unfocused or swimming is apparent

- The signal cable should be completely attached to the computer.
- Please adjust settings in the [PICTURE MODE] by checking the image on the screen.
- When the display mode is changed, the OSD Image Adjust settings may need to be re-adjusted.
- Check the monitor and your display card with respect to compatibility and recommended signal timings.
- If text looks garbled, change the video mode to non-interlaced and use a 60 Hz refresh rate.
- The image may be distorted when turning the power on or changing the settings.

The image is not properly reproduced

- Use the OSD Image Adjust controls to increase or decrease the coarse adjustment.
- Make sure that a supported resolution has been selected on the display card or system being used.
- If in doubt, please refer to the user's manual of the display card or system to change the resolution.

Selected resolution is not shown properly

- Check the Information OSD to verify the appropriate resolution has been selected.
- If the resolution you set is over or under a range, an "OUT of RANGE" window will appear in order to warn you. Please set supported resolution at the connected computer.

Video contrast is either too high or too low

- Check that the correct option for the [VIDEO RANGE] is selected for the input signal (see page 32).
  This only applies to video signals on the HDMI and USB Type-C1 inputs.

  Blacks are crushed and whites are clipped.
  Change the [VIDEO RANGE] to [FULL].
  Crushing blacks and clipping whites can occur when the monitor's [VIDEO RANGE] is set to [LIMITED] while the source video signal's color levels are RGB Full (RGB 0-255), causing lost details in the shadows and highlights and the image appears overly high in contrast.

  Blacks are dark gray and whites are dull.
  Change the [VIDEO RANGE] to [LIMITED].
  Dulling blacks and whites can occur when the [VIDEO RANGE] is set to [FULL] while the source video signal's color levels are RGB Limited (RGB 16-235), which effectively appears to prevent the monitor from obtaining its full brightness range and the image appears to be lacking in contrast.

Either light vertical or horizontal stripes may appear, depending on the specific image pattern. This is not a product fault or degradation.

Hardware Issues

The buttons and key do not respond

- Unplug the power cord of the monitor from the AC outlet to turn off and reset the monitor.
- Check the main power switch on the monitor.
- The monitor takes approximately 30 seconds or more to start up when the main power switch is turned on. During the startup, operation is not possible. Please wait until the startup is complete.

No sound

- Check to see if the audio cable is properly connected.
- Check to see if [MUTE] is active. Use the Remote control unit to enable or disable the mute function.
- Check to see if [VOLUME] is set to a minimum.
- Check to see if the computer supports an audio signal. If unsure, contact your supplier.
- If HDMI-CEC audio device is not connected, please set [AUDIO RECEIVER] to [OFF] (see page 33).

The Remote control unit is not functioning

- The batteries may be drained. Please change the batteries, then check if the Remote control unit works.
- Check that the batteries are inserted correctly.
- Check that the Remote control unit is pointing at the remote control sensor on the monitor.
- Check the status of [LOCK SETTINGS] (see page 60).
- The remote control system may not function when direct sunlight or strong illumination strikes the remote control sensor of the monitor, or when there is an object in the path.

Troubleshooting

The SCHEDULE/OFF TIMER function is not working properly

- The [SCHEDULE] function will be disabled when the [OFF TIMER] is set.
- If the [OFF TIMER] function is enabled and the power to the monitor is turned off when the power supply is interrupted unexpectedly, then the [OFF TIMER] will be reset.

Snowy picture, poor sound in TV

- Check antenna/cable connection. Use a new cable if necessary.

The USB Hub does not operate

- Check to make sure that the USB cable is properly connected. Refer to your USB device user's manual.
- Check that the USB upstream port on the monitor is connected to the USB downstream port on the computer. Please make sure the computer is [ON] or [USB POWER] is [ON].

USB Type-C device does not work

"Warning: Remove USB-C cable" OSD was shown.

- The monitor detected abnormal voltage or current on USB Type-C1 (upstream) port. Please remove USB-C cable immediately.

Charging is not started or unstable when using USB Type-C devices.

- When the Power LED is glowing red or amber or blinking amber, power delivery is not available. Please try again when the monitor is in normal status (see page 23).
- Check if the connected USB Type-C device complies with USB Power Delivery.
- Check if the USB-C cable complies with USB Power Delivery.
- The monitor might have excessive voltage or over current on USB Type-C1 port. Please remove the USB-C cable immediately (see page 19).
- When an Option Board is connected, power delivery to the USB Type-C1 (upstream) is limited 5 V/ 3 A (see page 90 and page 91).

Interference in TV

- Check components for shielding, move away from the monitor if necessary.

USB or RS-232C or LAN control is not available

- Check RS-232C (reverse type) or the LAN cable. A category 5 or higher LAN cable is required for connection.

The monitor goes into standby automatically

- Please check [OFF TIMER] setting (see page 41).
- Set the [CEC] function to [OFF]. The monitor may go into standby state when a connected HDMI-CEC supported device goes into standby.
- Please check [POWER] in the [SCHEDULE SETTINGS].

■Power LED Patterns

Power LED on the monitor is not lit (no blue or red color can be seen) (see page 23)

- Make sure the power cord is properly connected to the monitor and the wall, and make sure the monitor's main power switch is ON.
- Make certain the computer is not in a power-saving mode (touch the keyboard or move the mouse).
- Check that the [POWER INDICATOR] is set to [ON] in the [PROTECT] settings of the OSD menu (see page 51).

Power LED colors, except for blue, are blinking or glowing

- A certain failure might have occurred, please contact your supplier.
- If the monitor is powered off due to the internal temperature being higher than the normal operating temperature, the power LED will blink red six times. Please leave the monitor to cool down for a few minutes then turn it on again.
- The monitor could be in standby. Press the power button on the Remote control unit or on the monitor.

Specifications

■Compatible signal list

Screen resolution		Dot Clock	Horizontal	Vertical	HDMI		DisplayPort/USB-C (USB2.0)					USB-C (USB3.2)	Remark
					MODE2	MODE1	1.4SST	1.4MST	1.2SST	1.2MST	1.1a		
VGA	640 x 480	25.18 MHz	31.5 kHz	60 Hz	Yes	Yes	Yes	Yes	Yes	Yes	Yes	Yes	
US TEXT	720 X 400	28.32 MHz	31.5 kHz	70 Hz	Yes	Yes	Yes	Yes	Yes	Yes	Yes	Yes	
SVGA	800 X 600	40.00 MHz	37.9 kHz	60 Hz	Yes	Yes	Yes	Yes	Yes	Yes	Yes	Yes	
XGA	1024 x 768	65.00 MHz	48.4 kHz	60 Hz	Yes	Yes	Yes	Yes	Yes	Yes	Yes	Yes	
HD	1280 x 720	74.25 MHz	45.0 kHz	60 Hz	Yes	Yes	Yes	Yes	Yes	Yes	Yes	Yes	
WXGA	1280 x 800	83.50 MHz	49.7 kHz	60 Hz	Yes	Yes	Yes	Yes	Yes	Yes	Yes	Yes	
SXGA	1280 x 1024	108.00 MHz	64.0 kHz	60 Hz	Yes	Yes	Yes	Yes	Yes	Yes	Yes	Yes	
WXGA	1360 x 768	85.50 MHz	47.7 kHz	60 Hz	–	Yes	Yes	Yes	Yes	Yes	Yes	Yes	
	1366 x 768	85.50 MHz	47.7 kHz	60 Hz	Yes	Yes	Yes	Yes	Yes	Yes	Yes	Yes	
SXGA+	1400 x 1050	121.75 MHz	65.3 kHz	60 Hz	Yes	Yes	Yes	Yes	Yes	Yes	Yes	Yes	
WXGA+	1440 x 900	106.50 MHz	55.9 kHz	60 Hz	Yes	Yes	Yes	Yes	Yes	Yes	Yes	Yes	
UXGA	1600 x 1200	162.00 MHz	75.0 kHz	60 Hz	Yes	Yes	Yes	Yes	Yes	Yes	Yes	Yes	
WSXGA+	1680 x 1050	146.25 MHz	65.3 kHz	60 Hz	Yes	Yes	Yes	Yes	Yes	Yes	Yes	Yes	
Full HD	1920 x 1080	148.50 MHz	67.5 kHz	60 Hz	Yes	Yes	Yes	Yes	Yes	Yes	Yes	Yes	
WUXGA	1920 x 1200	193.25 MHz	74.6 kHz	60 Hz	Yes	Yes	Yes	Yes	Yes	Yes	Yes	Yes	
4K/2	1920 x 2160	277.25 MHz	133.3 kHz	60 Hz	Yes	Yes	Yes	Yes	Yes	Yes	Yes	Yes	
4K	3840 x 2160	209.75 MHz	52.4 kHz	24 Hz	–	–	–	Yes	–	–	Yes	Yes	
	3840 x 2160	297.00 MHz	54.0 kHz	24 Hz	Yes	Yes	–	–	–	–	–	–	
	3840 x 2160	297.00 MHz	56.3 kHz	25 Hz	Yes	Yes	–	–	–	–	–	–	
	3840 x 2160	262.75 MHz	65.7 kHz	30 Hz	–	–	Yes	Yes	Yes	Yes	Yes	Yes	
	3840 x 2160	297.00 MHz	67.5 kHz	30 Hz	Yes	Yes	–	–	–	–	–	–	
	3840 x 2160	594.00 MHz	112.5 kHz	50 Hz	Yes	–	–	–	–	–	–	–	
	3840 x 2160	533.25 MHz	133.3 kHz	60 Hz	–	–	Yes	–	Yes	–	–	–	Recommended signal timing
	3840 x 2160	594.00 MHz	135.0 kHz	60 Hz	Yes	–	–	–	–	–	–	–	Recommended signal timing
	4096 x 2160	223.00 MHz	52.4 kHz	24 Hz	–	–	Yes	Yes	–	–	–	–	Compressed image
	4096 x 2160	297.00 MHz	54.0 kHz	24 Hz	Yes	Yes	–	–	–	–	–	–	Compressed image
	4096 x 2160	297.00 MHz	56.3 kHz	25 Hz	Yes	–	–	–	–	–	–	–	Compressed image
	4096 x 2160	279.50 MHz	65.7 kHz	30 Hz	–	–	Yes	Yes	–	–	–	–	Compressed image
	4096 x 2160	297.00 MHz	67.5 kHz	30 Hz	Yes	–	–	–	–	–	–	–	Compressed image
	4096 x 2160	594.00 MHz	112.5 kHz	50 Hz	Yes	–	–	–	–	–	–	–	Compressed image
	4096 x 2160	567.25 MHz	133.3 kHz	60 Hz	–	–	Yes	–	–	–	–	–	Compressed image
	4096 x 2160	594.00 MHz	135.0 kHz	60 Hz	Yes	–	–	–	–	–	–	–	Compressed image
HDTV (1080p)	1920 x 1080	74.25 MHz	27.0 kHz	24 Hz	Yes	Yes	Yes	Yes	Yes	Yes	Yes	Yes	
	1920 x 1080	74.25 MHz	28.1 kHz	25 Hz	Yes	Yes	Yes	Yes	Yes	Yes	Yes	Yes	
	1920 x 1080	74.25 MHz	33.8 kHz	30 Hz	Yes	Yes	Yes	Yes	Yes	Yes	Yes	Yes	
	1920 x 1080	148.50 MHz	56.3 kHz	50 Hz	Yes	Yes	Yes	Yes	Yes	Yes	Yes	Yes	
	1920 x 1080	148.50 MHz	67.5 kHz	60 Hz	Yes	Yes	Yes	Yes	Yes	Yes	Yes	Yes	
HDTV (1080i)	1920 x 1080 (Interlaced)	74.25 MHz	28.1 kHz	50 Hz	Yes	Yes	–	–	–	–	–	–	
	1920 x 1080 (Interlaced)	74.25 MHz	33.8 kHz	60 Hz	Yes	Yes	–	–	–	–	–	–	
HDTV (720p)	1280 x 720	74.25 MHz	37.5 kHz	50 Hz	Yes	Yes	Yes	Yes	Yes	Yes	Yes	Yes	
	1280 x 720	74.25 MHz	45.0 kHz	60 Hz	Yes	Yes	Yes	Yes	Yes	Yes	Yes	Yes	
SDTV (576p)	720 x 576	27.00 MHz	31.3 kHz	50 Hz	Yes	Yes	Yes	Yes	Yes	Yes	Yes	Yes	
SDTV (480p)	720 x 480	27.03 MHz	31.5 kHz	60 Hz	Yes	Yes	Yes	Yes	Yes	Yes	Yes	Yes	
SDTV (576i)	720 x 576 (Interlaced)	27.00 MHz	15.6 kHz	50 Hz	Yes	Yes	–	–	–	–	–	–	
SDTV (480i)	720 x 480 (Interlaced)	27.03 MHz	15.8 kHz	60 Hz	Yes	Yes	–	–	–	–	–	–	

Specifications

■Product Specifications

Model	PN-M652	PN-P656	PN-M552	PN-P556
LCD component	65” Class [64-1/2 inch (163.9 cm) diagonal] TFT LCD		55” Class [54-5/8 inch (138.8 cm) diagonal] TFT LCD	
Max. resolution (pixels)	3840 x 2160			
Max. colors	Approx. 1073 million colors			
Pixel pitch	0.372 mm (H) × 0.372 mm (V)		0.315 mm (H) × 0.315 mm (V)	
Brightness (typical)	550 cd/m²*1	700 cd/m²*1	550 cd/m²*1	700 cd/m²*1
Contrast ratio (typical)	1200:1			
Viewing angle	178° right/left/up/down (contrast ratio ≥ 10)			
Screen active area inch (mm)	56-1/4 (W) x 31-5/8 (H) (1428.48 x 803.52)		47-5/8 (W) x 26-13/16 (H) (1209.60 x 680.40)	
Response Time	8 ms (grey to grey, avg.)			
Plug and play	VESA			
Input terminals				
Video/Audio	HDMI (PC/AV signal compatible) x 2 DisplayPort x 1 USB Type-C x 1			
Serial (RS-232C)	D-sub 9 pin x 1			
Remote	Φ3.5 mm mini stereo jack x 1			
Output terminals				
Video/Audio	HDMI x 1 DisplayPort x 1			
Audio	Φ3.5 mm mini stereo jack x 1			
USB terminal	USB 2.0/USB 3.2 Gen 1 compliant (USB Type-A) x 1 USB 2.0/USB 3.2 Gen 1 compliant (USB Type-C2 downstream) x 1 SERVICE (USB Type-A) x 1			
LAN terminal	10 BASE-T/100 BASE-TX			
Power supply terminal	5 V, 0.9 A (USB Type-A) 5 V, 1.5 A (USB Type-C2 downstream) 5 V/3 A, 9 V/3 A, 12 V/3 A, 15 V/3 A, 20 V/3.25 A (5 V/3 A when an Option Board is connected) (USB Type-C1 upstream) 5 V, 0.5 A (SERVICE (USB Type-A))			
Slot				
Option Board Slot	12 V, 5.5 A (power supplied when expanding the functions with an optional part)			
Compute Module Slot	12 V, 1.67 A (power supplied when expanding the functions with an Compute module)			
Speaker output	10 W + 10 W			
Power requirement	AC 100 - 240 V, 4.6 A - 1.9 A, 50/60 Hz	AC 100 - 240 V, 5.0 A - 2.1 A, 50/60 Hz	AC 100 - 240 V, 4.0 A - 1.7 A, 50/60 Hz	AC 100 - 240 V, 4.1 A - 1.7 A, 50/60 Hz
Operating temperature*2	32 °F to 104 °F (0 °C to 40 °C)			
Operating humidity	20% to 80% (without condensation)			
Operating altitude	3000 m or less			
Storage temperature	-4 °F to 140 °F (-20 °C to 60 °C)			
Storage humidity	10% to 80 % (without condensation)			
Power consumption*3 (Max/networked standby mode*4/standby mode*5/ off mode)	135 W (400 W/2.0 W/0.5 W/0.0 W)	160 W (435 W/2.0 W/0.5 W/0.0 W)	105 W (355 W/2.0 W/0.5 W/0.0 W)	115 W (365 W/2.0 W/0.5 W/0.0 W)
Dimensions (excluding protrusions) inch (mm)	Approx. 57-1/4 (W) x 2-5/16 (D) x 32-3/4 (H) (1454.5 x 59.5 x 832.4)		Approx. 48-5/8 (W) x 2-5/16 (D) x 27-15/16 (H) (1235.6 x 59.5 x 709.3)	
Weight lbs. (kg)	Approx. 57.3 (26.0)		Approx. 45.2 (20.5)	

*1: Brightness will depend on input mode and other picture settings.
Brightness level will decrease over time. Due to the nature of the equipment, it is not possible to precisely maintain a constant level of brightness.
*2: Temperature condition may change when using the monitor together with the optional equipments recommended by SHARP. In such cases, please check the temperature condition specified by the optional equipments.
*3: Factory setting. (When no optional part is attached.)
*4: When no optional part is attached. Time for power management function: 20 sec.
Only when the input is USB-C, time for power management function: 3 min.
*5: When no optional part is attached. Time for power management function: 3.5 min.

As a part of our policy of continuous improvement, SHARP reserves the right to make design and specification changes for product improvement without prior notice.
The performance specification figures indicated are nominal values of production units. There may be some deviations from these values in individual units.

Model	PN-M502	PN-P506	PN-M432	PN-P436
LCD component	50” Class [49-1/2 inch (125.7 cm) diagonal] TFT LCD		43” Class [42-1/2 inch (108.0 cm) diagonal] TFT LCD	
Max. resolution (pixels)	3840 x 2160			
Max. colors	Approx. 1073 million colors			
Pixel pitch	0.285 mm (H) × 0.285 mm (V)		0.245 mm (H) × 0.245 mm (V)	
Brightness (typical)	550 cd/m²*1	700 cd/m²*1	550 cd/m²*1	700 cd/m²*1
Contrast ratio (typical)	4000:1		1200:1	
Viewing angle	178° right/left/up/down (contrast ratio ≥ 10)			
Screen active area inch (mm)	43-1/2 (W) x 24-1/4 (H) (1095.84 x 616.41)		37-1/16 (W) x 20-13/16 (H) (941.18 x 529.42)	
Response Time	8 ms (grey to grey, avg.)			
Plug and play	VESA			
Input terminals				
Video/Audio	HDMI (PC/AV signal compatible) x 2 DisplayPort x 1 USB Type-C x 1			
Serial (RS-232C)	D-sub 9 pin x 1			
Remote	Φ3.5 mm mini stereo jack x 1			
Output terminals				
Video/Audio	HDMI x 1 DisplayPort x 1			
Audio	Φ3.5 mm mini stereo jack x 1			
USB terminal	USB 2.0/USB 3.2 Gen 1 compliant (USB Type-A) x 1 USB 2.0/USB 3.2 Gen 1 compliant (USB Type-C2 downstream) x 1 SERVICE (USB Type-A) x 1			
LAN terminal	10 BASE-T/100 BASE-TX			
Power supply terminal	5 V, 0.9 A (USB Type-A) 5 V, 1.5 A (USB Type-C2 downstream) 5 V/3 A, 9 V/3 A, 12 V/3 A, 15 V/3 A, 20 V/3.25 A (5 V/3 A when an Option Board is connected) (USB Type-C1 upstream) 5 V, 0.5 A (SERVICE (USB Type-A))			
Slot				
Option Board Slot	12 V, 5.5 A (power supplied when expanding the functions with an optional part)			
Compute Module Slot	12 V, 1.67 A (power supplied when expanding the functions with an Compute module)			
Speaker output	10 W + 10 W			
Power requirement	AC 100 - 240 V, 3.4 A - 1.4 A, 50/60 Hz	AC 100 - 240 V, 3.9 A - 1.6 A, 50/60 Hz	AC 100 - 240 V, 3.4 A - 1.4 A, 50/60 Hz	AC 100 - 240 V, 3.6 A - 1.5 A, 50/60 Hz
Operating temperature*2	32 °F to 104 °F (0 °C to 40 °C)			
Operating humidity	20% to 80% (no condensation)			
Operating altitude	3000 m or less			
Storage temperature	-4 °F to 140 °F (-20 °C to 60 °C)			
Storage humidity	10% to 80 % (without condensation)			
Power consumption*3 (Max/networked standby mode*4/standby mode*5/ off mode)	85 W (305 W/2.0 W/0.5 W/0.0 W)	95 W (345 W/2.0 W/0.5 W/0.0 W)	75 W (305 W/2.0 W/0.5 W/0.0 W)	80 W (320 W/2.0 W/0.5 W/0.0 W)
Dimensions (excluding protrusions) inch (mm)	Approx. 44-3/16 (W) x 2-5/8 (D) x 25-3/8 (H) (1121.6 x 66.5 x 645.2)		Approx. 38 (W) x 2-5/8 (D) x 21-15/16 (H) (965.0 x 66.5 x 557.2)	
Weight lbs. (kg)	Approx. 39.7 (18.0)		Approx. 29.8 (13.5)	

*1: Brightness will depend on input mode and other picture settings.
Brightness level will decrease over time. Due to the nature of the equipment, it is not possible to precisely maintain a constant level of brightness.
*2: Temperature condition may change when using the monitor together with the optional equipments recommended by SHARP. In such cases, please check the temperature condition specified by the optional equipments.
*3: Factory setting. (When no optional part is attached.)
*4: When no optional part is attached. Time for power management function: 20 sec.
Only when the input is USB-C, time for power management function: 3 min.
*5: When no optional part is attached. Time for power management function: 3.5 min.

As a part of our policy of continuous improvement, SHARP reserves the right to make design and specification changes for product improvement without prior notice.
The performance specification figures indicated are nominal values of production units. There may be some deviations from these values in individual units.

■Dimensional Drawings

Note that the values shown are approximate values.

[PN-M652/PN-P656] (Unit: mm)

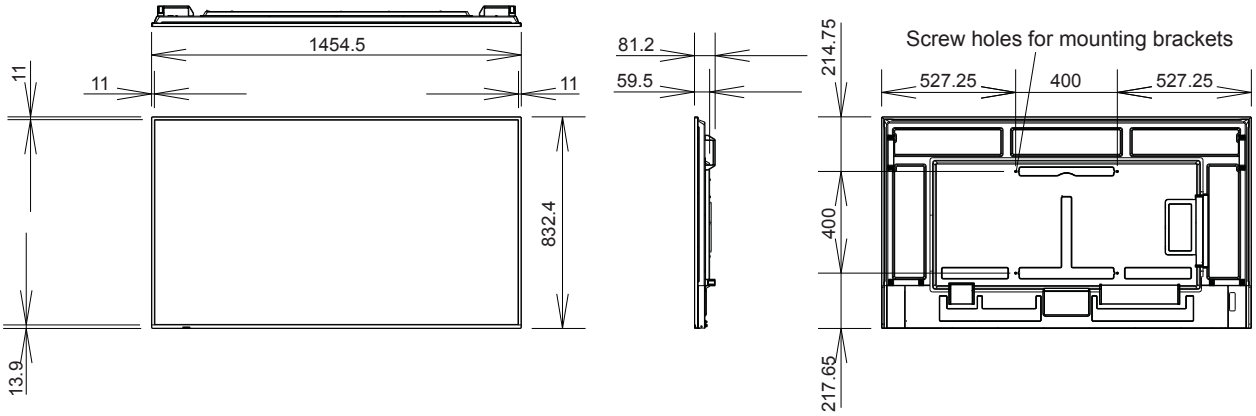

[PN-M552/PN-P556]

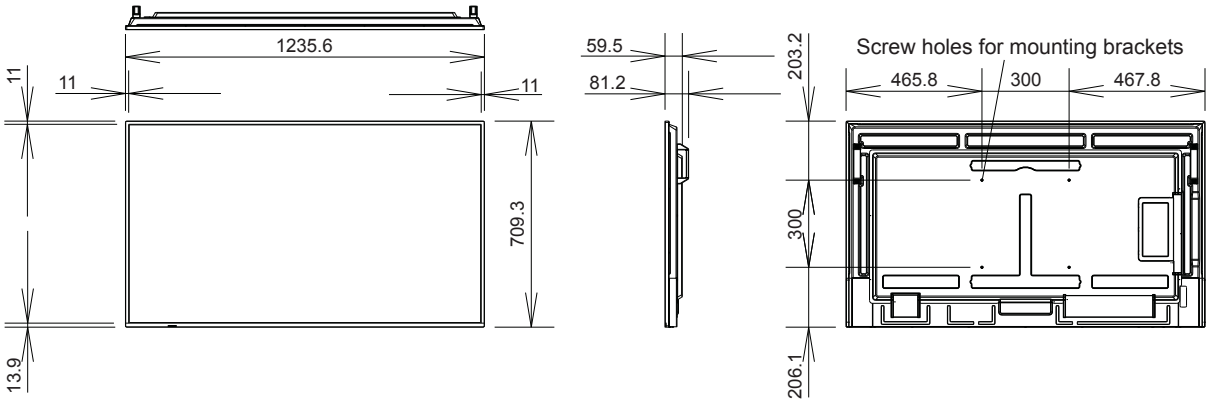

[PN-M502/PN-P506]

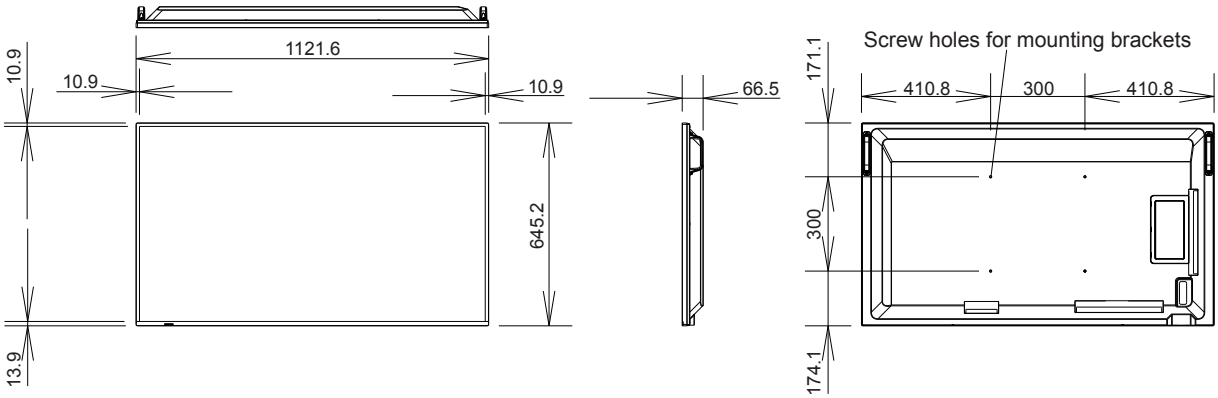

[PN-M432/PN-P436]

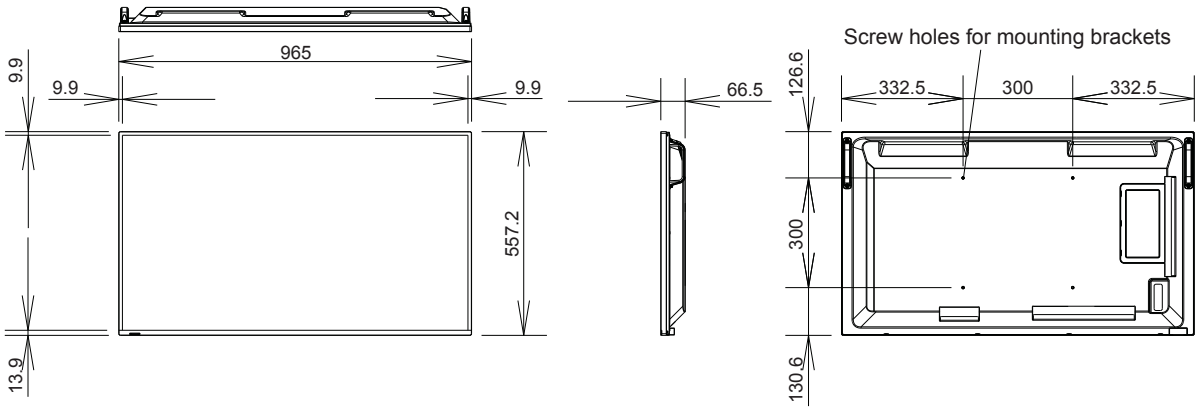

* When mounting the monitor, be sure to use a wall-mount bracket that complies with the VESA-compatible mounting method.
SHARP recommends using M6 screws and tighten the screws.
Note that screw hole depth of the monitor is 1/2 inch (12 mm). Loose mounting may cause the product to fall, resulting in serious personal injuries as well as damage to the product. The screw and hole should come together with over 3/8 inch (10 mm) length of thread. Use a bracket which has been approved for UL1678 standard, and which can endure at least 4 times or more the weight of the monitor.

Appendix-A External Resources

Additional specification documents and accessories, and optional software applications referenced in this product manual are listed below.

■Regional websites

Global: https://www.sharp-nec-displays.com/global/

North America: https://www.sharpusa.com/

Europe, Russia, Middle East and Africa: https://www.sharpnecdisplays.eu

■Additional Documentation

“External Control” PDF document

This document defines the communications protocol for externally controlling and querying the monitor via either RS-232C or LAN. The protocol uses encoded binary and requires calculation of checksums, and most functionality in the monitor can be controlled using these commands. A simpler protocol is also available for less demanding applications (see below).

This document is available for download from our website in your region.

A Python programming language based SDK (Software Development Kit) is also available that encapsulates this communications protocol into a Python library for rapid development.

https://github.com/SharpNECDisplaySolutions/necpdsdk

“ASCII Control Command - Reference Manual” PDF document

This document defines the communications protocol for externally controlling the basic functions of the monitor via LAN using a simple English-like syntax. It is suitable for easy integration into existing control systems. Functionality such as controlling and querying the power state, video inputs, volume, and status is available. The protocol uses ASCII encoding and doesn’t require calculation of checksums.

This document is available for download from our website in your region.

“Raspberry Pi Compute Module - Setup Guide” PDF document

Raspberry Pi

This document describes the features, installation, connectivity, and configuration of the Raspberry Pi Compute Module, which is an optional component available for this model. The required Compute Module Interface Board and Raspberry Pi Compute Module are available separately. Please contact an authorized dealer or visit our website in your region for purchase information and availability.

This document can be downloaded from:

https://www.sharp-nec-displays.com/dl/en/manual/raspberrypi/

NaViSet Secure - Reference guide
This document describes the features of the NaViSet Secure technology available on this monitor. This document is available for download. Please contact your dealer for more information.

■Software

Display Wall Calibrator software
This software provides advanced video wall configuration and accurate color matching by calibrating the monitors using an external color sensor. It is useful when setting up multi-monitor installations - such as a video wall - to achieve the best possible brightness and color matching between screens and configuring settings applicable to the video wall. The software, available for Microsoft Windows and macOS, is available for purchase and may require the use of a supported external color sensor. Please contact an authorized dealer or see our website in your region for purchase information and availability.

NaViSet Administrator software
This free software is an advanced and powerful network based control, monitoring and asset management system for monitors and projectors. The software is available for Microsoft Windows and macOS.

The latest version of the NaViSet Administrator software is available. Please contact your dealer for more information.

NaViSet Administrator Server Edition software
The NaViSet Administrator Server Edition version builds on the powerful features of its core software with the addition of enterprise level secure multi-user support, a web interface accessible via mobile devices, and support for the innovative NaViSet Secure network feature integrated into this model.

The NaViSet Administrator Server Edition for Windows is available as a subscription service. Please contact your dealer for more information.

Information Display Downloader

This software provides the latest applications and firmware to keep the monitor up to date. This software is available for Microsoft Windows. The Information Display Downloader can be downloaded from the following SHARP website.

https://business.sharpusa.com/product-downloads

https://www.sharp.eu/download-centre

Mounting Precautions (For SHARP dealers and service engineers)

Please read "Safety Precautions and Maintenance" carefully before installation.

Mounting the monitor requires expertise and the work must be carefully performed by a trained service person in accordance with the section.

Please note the following when mounting on a wall or ceiling:

- We recommend mounting interfaces that comply with UL1678 standard in North America.
- For detailed information, refer to the instructions included with the mounting equipment.

We strongly recommend using the screws as shown below.
If using screws longer than below mentioned, check the depth of the hole.

- This monitor and bracket must be installed on a wall which can endure at least 4 times or more the weight of the monitor. Install by the most suitable method for the material and the structure.
- Do not use an impact driver.
- After mounting, please carefully ensure the monitor is secure, and not able to come loose from the wall or mount.

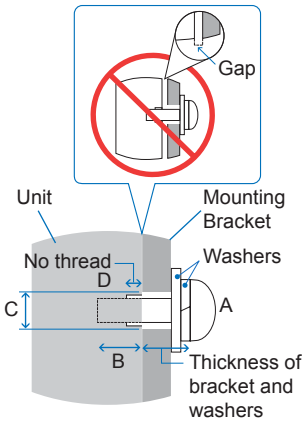

Model	Screw Size		Bracket Hole	No Thread	Recommended Fasten Force
	(A)	(B)	(C)	(D)	
PN-M432/PN-P436	M6 (4 pcs)	10-12 mm (3/8-1/2 inch)	≤ Ø 8.5 mm (5/16 inch)	4 mm (3/16 inch)	390-670 N•cm
PN-M502/PN-P506					
PN-M552/PN-P556				2 mm (1/16 inch)	
PN-M652/PN-P656					

■Attaching Mounting Accessories

Be careful to avoid tipping the monitor when attaching accessories.

1. Attach Mounting Accessories

Be careful to avoid tipping the monitor when attaching accessories.

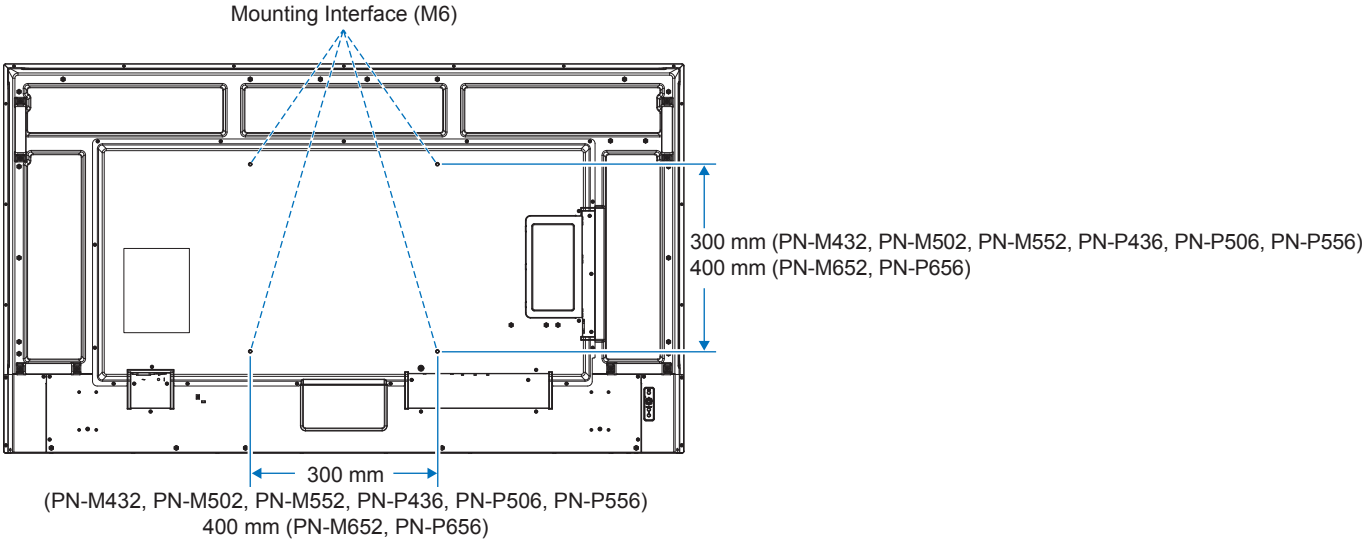

Mounting accessories can be attached with the monitor in the face down position. To avoid scratching the LCD panel, always place a soft cloth, such as a blanket that is larger than the monitor's screen area, on the table before laying the monitor face down. Make sure there is nothing on the table that can damage the monitor.

TIP:
- Prior to installation, place the monitor face down on a flat even surface that is larger than the monitor screen. Use a sturdy table that can easily support the weight of the monitor.
- To avoid scratching the LCD panel, always place a soft cloth, such as a blanket that is larger than the monitor's screen area, on the table before laying the monitor face down when installing the monitor stand or mounting accessories.

■Installing a safety wire

TIP: When installing, do not apply pressure to the LCD panel or excessive force to any part of the monitor by pushing or leaning on it. This may cause the monitor to become distorted or damaged.

Handles for safety wire

Attach the safety wire to the handles shown in the figure below.

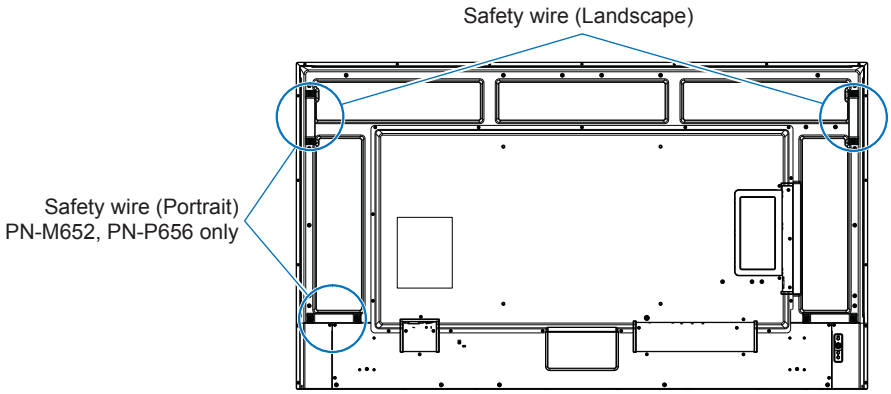

Mounting Precautions (For SHARP dealers and service engineers)

■Installing a Optional Table Top Stand

For installation, follow the instructions included with the stand. Use only those devices recommended by the manufacturer.

Model name	Optional table top stand
PN-M432/PN-P436 PN-M502/PN-P506 PN-M552/PN-P556	ST-43M (screws are included)
PN-M652/PN-P656	ST-65M (thumbscrews, screws, clamps, and stand holders are included)

TIP:
- Please use mounting accessories which are included with the optional table top stand. Install the stand so the long end of the feet face forward.
- The monitor can only be used in the landscape orientation with the tabletop stand.
- These stands are not available for Australia and New Zealand.

ST-43M

PN-M432, PN-M502, PN-M552, PN-P436, PN-P506, PN-P556

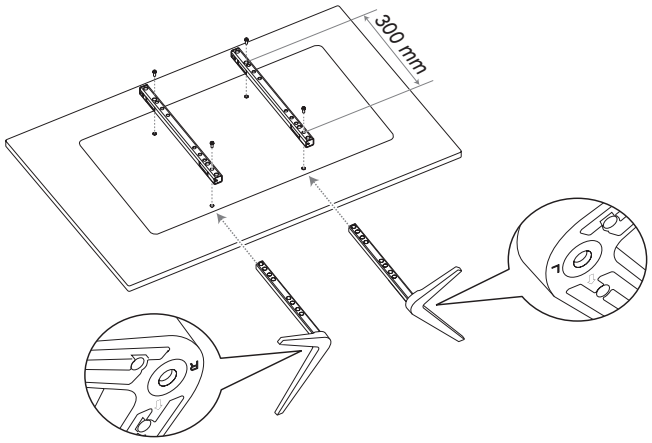

Height adjustment

1. **The lines on the stand pole are indicators of the height adjustment (Figure 1). Please adjust the pipe to the lines.**

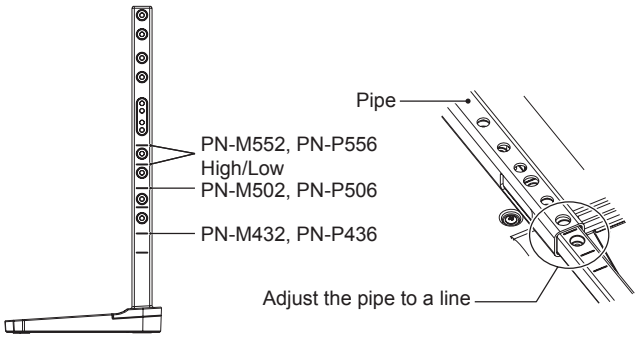

Figure 1

2. **Please install the stand pole and the pipe with included screws. Please screw the two screw holes at the pipe (Figure 2).**

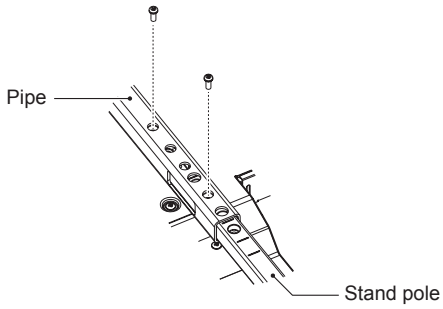

Figure 2

ST-65M

PN-M652, PN-P656

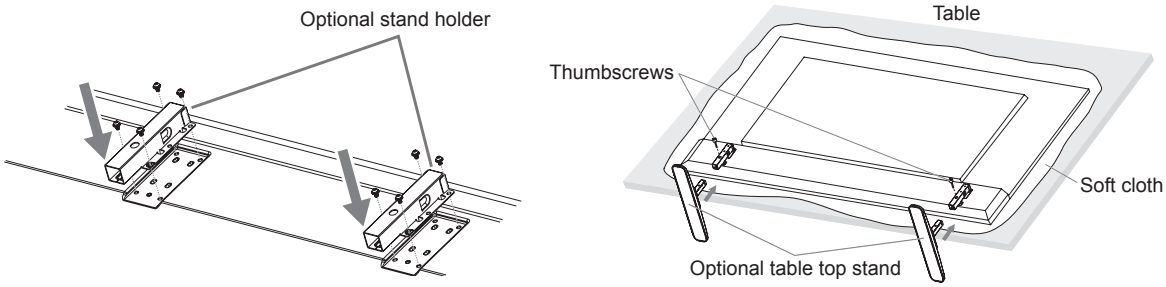

Manufacturer's Recycling and Energy Information

We are strongly committed to environmental protection and sees recycling as one of the company's top priorities in trying to minimize the burden placed on the environment. We are engaged in developing environmentally friendly products, and always strive to help define and comply with the latest independent standards from agencies such as ISO (International Organization for Standardization) and TCO (Swedish Trades Union).

Energy Saving

This monitor features an advanced energy saving capability. When a Display Power Management signal is sent to the monitor, the Energy Saving mode is activated. The monitor enters a single Energy Saving mode.

For additional information visit:

https://www.sharpusa.com/ (in USA)

https://www.sharpnecdisplays.eu (in Europe)

https://www.sharp-nec-displays.com/global/index.html (Global)

About Crestron Connected

■Crestron Connected

This screen allows you to set Crestron settings.
This monitor can be controlled via network using equipment and application software from Crestron Electronics, Inc.

This is a function to connect a system developed by Crestron Electronics, Inc. which manages and controls multiple system devices connected to the network.

For details, refer to the Crestron Electronics, Inc. website.

https://www.crestron.com/

This monitor supports “Crestron Fusion” and “Crestron XiO Cloud”, and is compatible with the Crestron XiO Cloud service.

For details, refer to the Crestron Electronics, Inc. website.

https://www.crestron.com/Products/Featured-Solutions/Crestron-Fusion

https://www.crestron.com/Products/Featured-Solutions/XiO-Cloud

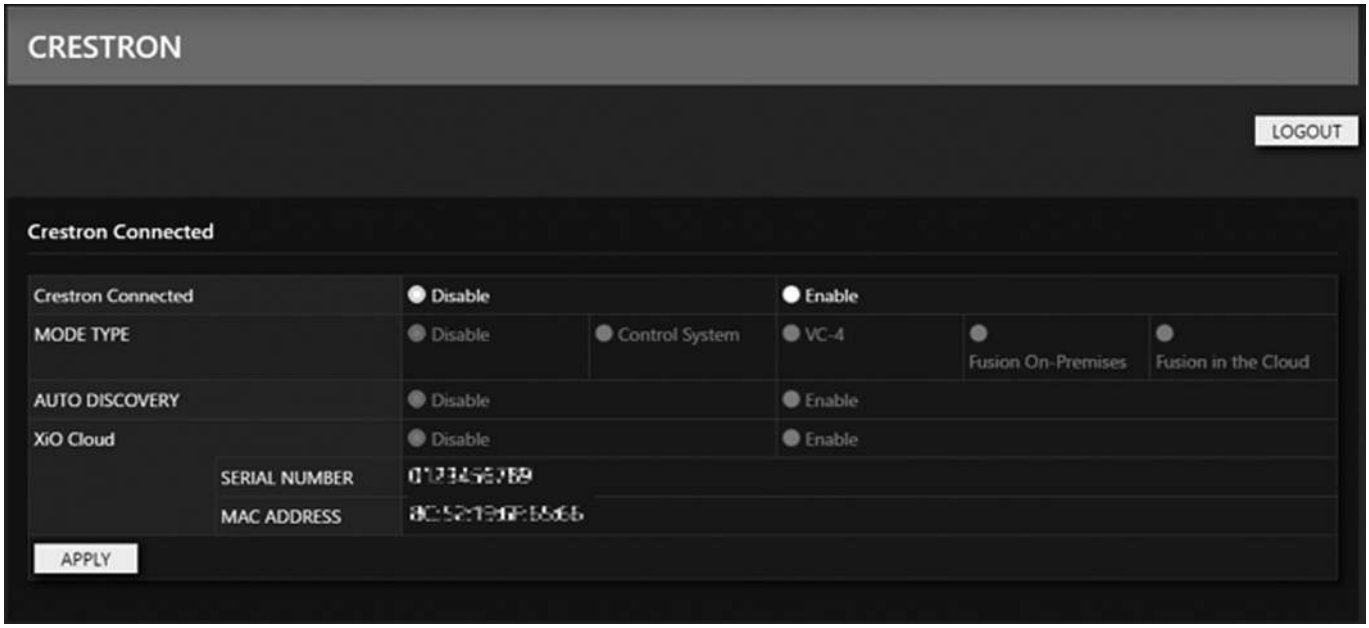

Crestron Connected .....Set whether to use the Crestron Connected function.

MODE TYPE .....Set a mode. Only one mode [CONTROL SYSTEM], [VC-4], [Fusion On-Premises] or [Fusion in the Cloud] can be set to on. If [Disable] is set, [CONTROL SYSTEM], [VC-4], [Fusion On-Premises], and [Fusion in the Cloud] are disabled.

AUTO DISCOVERY.....Set whether to automatically detect this monitor.

XiO Cloud .....Set whether to use [XiO Cloud].

Control System

When selecting the [Control System] at [MODE TYPE], Control System settings appear.

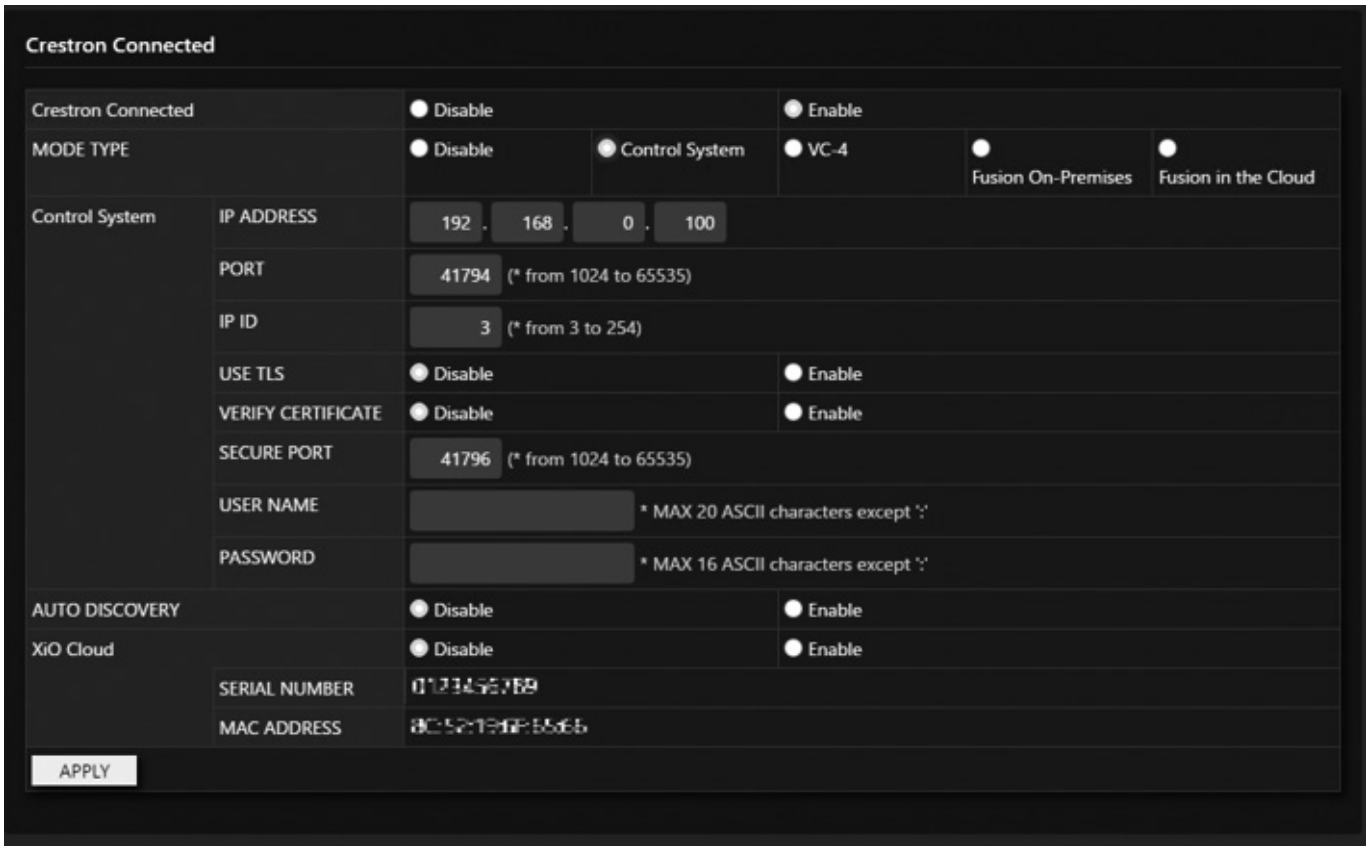

IP ADDRESS .....Set the IP address for [Control System].
PORT.....Set the port number to connect to [Control System].
IP ID.....Set the [IP ID] for [Control System].
USE TLS.....Set whether to use encrypted communication by TLS.
VERIFY CERTIFICATE .....Set whether to authenticate with a certificate when using TLS.
SECURE PORT.....Set the port number when using TLS.
USER NAME .....Set the username when using TLS.
PASSWORD.....Set the password when using TLS.

About Crestron Connected

VC-4

When selecting the [VC-4] at [MODE TYPE], VC-4 settings appear.

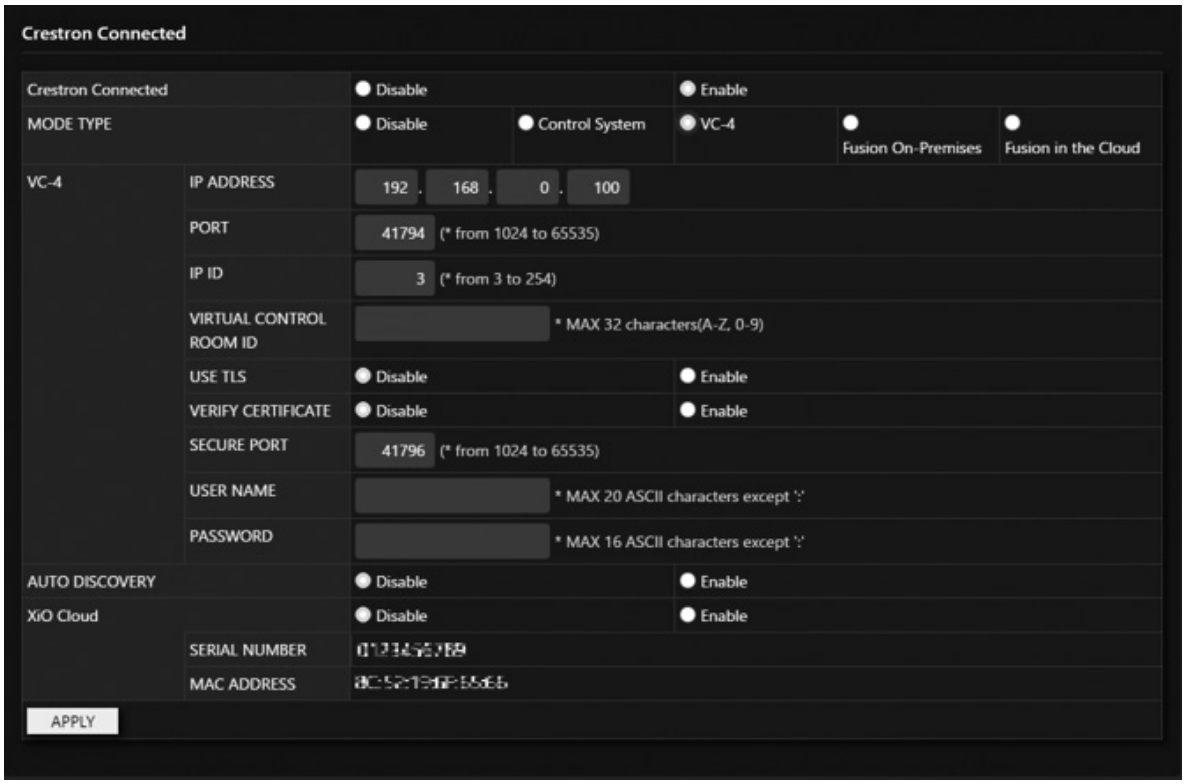

IP ADDRESS .....Set the IP address for [VC-4].
PORT.....Set the port number to connect to [VC-4].
IP ID.....Set the [IP ID] for [VC-4].
VIRTUAL CONTROL ROOM ID .....Set the ID for “Virtual Control Room”.
USE TLS.....Set whether to use encrypted communication by TLS.
VERIFY CERTIFICATE .....Set whether to authenticate with a certificate when using TLS.
SECURE PORT.....Set the port number when using TLS.
USER NAME .....Set the username when using TLS.
PASSWORD.....Set the password when using TLS.

Fusion On-Premises

When selecting the [Fusion On-Premises] at [MODE TYPE], Fusion On-Premises settings appear.

PORT.....Set the port number to connect to [Crestron Fusion On-Premises].

Fusion in the Cloud

When selecting the [Fusion in the Cloud] at [MODE TYPE], Fusion in the Cloud settings appear.

URL .....Set the URL of Crestron Fusion.

PORT.....Set the port number to connect to Crestron Fusion.

APPLY: Apply the changes.

MANAGE CERTIFICATE

Import the certificate for Control System and VC-4 to this monitor.
If the monitor has a different certificate, remove it and then import the one you set.
The certification formats are: “.cer” and “.der”.

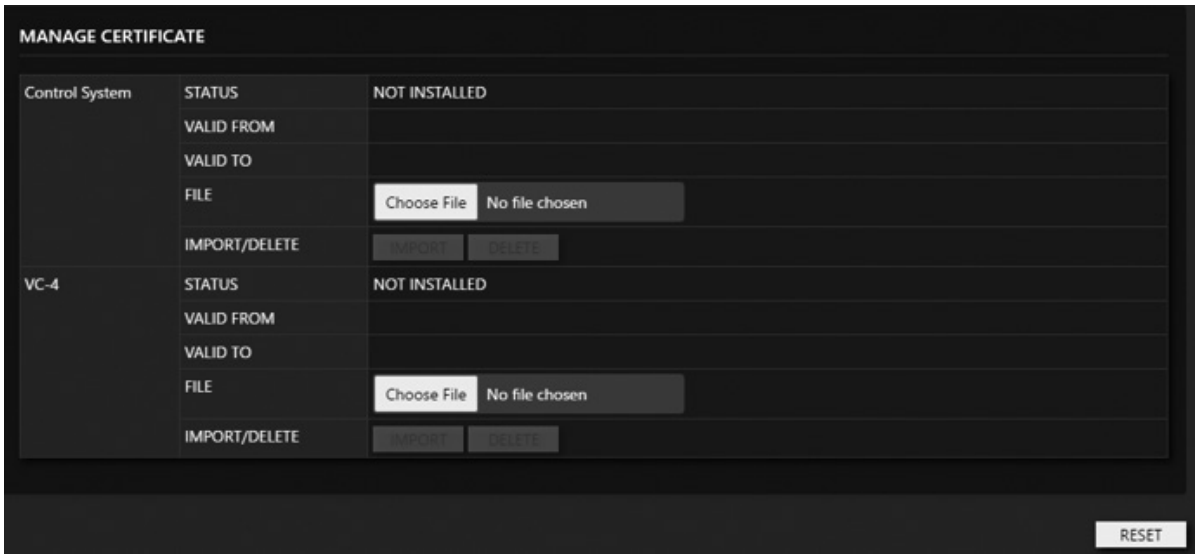

RESET: Reset the settings back to factory settings.

TIP: Imported certificates are not deleted by RESET. Press the DELETE button on each certificate to delete a certificate.

SHARP

SHARP CORPORATION

Rev.1