Saramonic

Full-duplex Wireless Intercom Headset System
全双工无线内通耳机系统

WiTalk9 System

User Manual
用户手册

Statement

Please read this manual carefully before using the product and strictly operate & store it in accordance with the instructions. Please save the manual for your future reference. If you need further assistance than the user manual, please consult your retailer for help or email us: info@saramonic.com.

Cautions

1. Non-professionals are strictly prohibited from disassembling this unit on their own.
2. Please keep it away from heat sources such as radiators or spotlights.
3. Please clean the unit with only a soft, dry cloth.
4. When using and storing, please keep away from dust and moisture.
5. For the best pick-up pattern, do not hold your hand against the microphone capsule cover.

General Introduction

The WiTalk9 system, a full-duplex wireless intercom headset system, provides a reliable transmission range up to 500 m. With Saramonic app connection, in-app GPS tracking will automatically change the frequency to address the interference.

WiTalk9 adopts ClearTalk™, a three-microphone array noise cancellation algorithm with 360° coverage, features Light / Strong mode for clear crew communication. This system also comes with AGC algorithm and high volume for stable intercom in noisy environments with 130 dB SPL. The included aviation-grade condensation cushions reduce ambient noise further. The WiTalk9 system is ideal for medium-sized or major event scenes, such as media production teams, stage performances, recording entertainment programs, sports events, or fire drills.

Each headset comes with a rechargeable and replaceable battery. The runtime of the master headset is up to 10 hours. Each remote headset supports a 15-hour runtime.

Features

• 9-person system, HUB-free, and ready to use. Scalable to 30 users via wired cascading.
• Cross-location communication via the LINK port to connect online meetings. Supports wireless connection to phones intercom under 4G / 5G roaming.
• Dual-antenna for up to 500 m intercom. Interference-free in areas with cluttered signals.
• ClearTalk™, a three-microphone array noise cancellation algorithm with 360° coverage, features Light / Strong mode for clear crew communication.
• AGC algorithm and high volume for stable intercom in noisy environments with 130 dB SPL.
• Saramonic App with essential functions in large icons for easy operation. AFH activation for seamless global use.
• Encryption for secure communication and preventing frequency interference.
• 10+ optional accessories with ear cushions, batteries, battery dock, etc.
• IPX5-rated for rainy weather performance. Wind-noise isolation algorithm and microphone foam cover for dual wind-noise isolation.
• Aviation-grade ear cushions with low-temperature condensing material for noise isolation, comfort, and sweat resistance.

Available Packages

The WiTalk9 system comes with various configurations for you to choose depending on your team size. This manual is for all WiTalk9 packages. The contents of each package are described below.

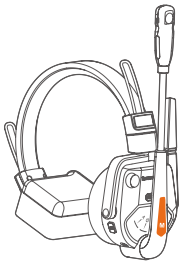

WiTalk9 SMH Single-ear Master Headset

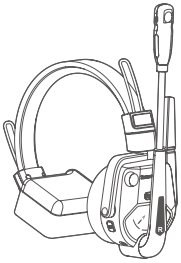

WiTalk9 SRH Single-ear Remote Headset

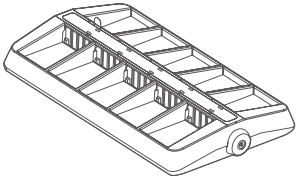

6-Slot / 10-Slot Charging Case

Replaceable Battery

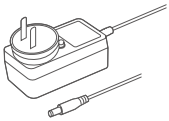

Charger for Charging Case

On-Ear Foam Cushion

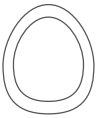

Condensation cushion

Foam Windscreen

Carrying Case

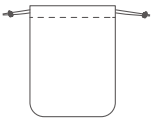

Drawstring Pouch

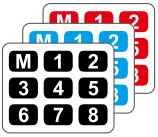

Number Sticker Sheet

Sold Separately

Link cable kit for cascade connection

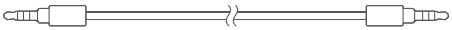

3.5 mm TRRS to TRRS Audio Cable

USB-A to USB-C Adapter

3.5 mm TRRS Female to USB-A Sound Card

WiTalk9 WT2S

WiTalk9 SMH Single-ear Master Headset (1)
WiTalk9 SRH Single-ear Remote Headset (1)
Replaceable Battery (4)
6-Slot Charging Case (1)
Charger for Charging Case (1)
On-Ear Foam Cushion (2)
Condensation Cushion (2)
Headset Pad (2)
Foam Windscreen for Microphone (2)
Number Sticker Sheet for Headset (3)
Drawstring Pouch for Headset (2)
Carrying Case (1)

WiTalk 9 WT3S

WiTalk9 SMH Single-ear Master Headset (1)
WiTalk9 SRH Single-ear Remote Headset (2)
Replaceable Battery (6)
6-Slot Charging Case (1)
Charger for Charging Case (1)
On-Ear Foam Cushion (3)
Condensation Cushion (3)
Headset Pad (3)
Foam Windscreen for Microphone (3)
Number Sticker Sheet for Headset (3)
Drawstring Pouch for Headset (3)
Carrying Case (1)

WiTalk9 WT4S

WiTalk9 SMH Single-ear Master Headset (1)
WiTalk9 SRH Single-ear Remote Headset (3)
Replaceable Battery (8)
10-Slot Charging Case (1)
Charger for Charging Case (1)
On-Ear Foam Cushion (4)
Condensation Cushion (4)
Headset Pad (4)
Foam Windscreen for Microphone (4)
Number Sticker Sheet for Headset (3)
Drawstring Pouch for Headset (4)
Carrying Case (1)

WiTalk9 WT5S

WiTalk9 SMH Single-ear Master Headset (1)
WiTalk9 SRH Single-ear Remote Headset (4)
Replaceable Battery (10)
10-Slot Charging Case (1)
Charger for Charging Case (1)
On-Ear Foam Cushion (5)
Condensation Cushion (5)
Headset Pad (5)
Foam Windscreen for Microphone (5)
Number Sticker Sheet for Headset (3)
Drawstring Pouch for Headset (5)
Carrying Case (1)

WiTalk9 WT6S

WiTalk9 SMH Single-ear Master Headset (1)
WiTalk9 SRH Single-ear Remote Headset (5)
Replaceable Battery (12)
10-Slot Charging Case (1)
Charger for Charging Case (1)
On-Ear Foam Cushion (6)
Condensation Cushion (6)
Headset Pad (6)
Foam Windscreen for Microphone (6)
Number Sticker Sheet for Headset (3)
Drawstring Pouch for Headset (6)
Carrying Case (1)

WiTalk9 WT7S

WiTalk9 SMH Single-ear Master Headset (1)
WiTalk9 SRH Single-ear Remote Headset (6)
Replaceable Battery (14)
10-Slot Charging Case (1)
Charger for Charging Case (1)
On-Ear Foam Cushion (7)
Condensation Cushion (7)
Headset Pad (7)
Foam Windscreen for Microphone (7)
Number Sticker Sheet for Headset (3)
Drawstring Pouch for Headset (7)
Carrying Case (1)

WiTalk9 WT8S

WiTalk9 SMH Single-ear Master Headset (1)
WiTalk9 SRH Single-ear Remote Headset (7)
Replaceable Battery (16)
10-Slot Charging Case (1)
Charger for Charging Case (1)
On-Ear Foam Cushion (8)
Condensation Cushion (8)
Headset Pad (8)
Foam Windscreen for Microphone (8)
Number Sticker Sheet for Headset (3)
Drawstring Pouch for Headset (8)
Carrying Case (1)

WiTalk9 WT9S

WiTalk9 SMH Single-ear Master Headset (1)
WiTalk9 SRH Single-ear Remote Headset (8)
Replaceable Battery (18)
10-Slot Charging Case (1)
Charger for Charging Case (1)
On-Ear Foam Cushion (9)
Condensation Cushion (9)
Headset Pad (9)
Foam Windscreen for Microphone (9)
Number Sticker Sheet for Headset (3)
Drawstring Pouch for Headset (9)
Carrying Case (1)

Product Structure

WiTalk9 SMH Single-ear Master Headset

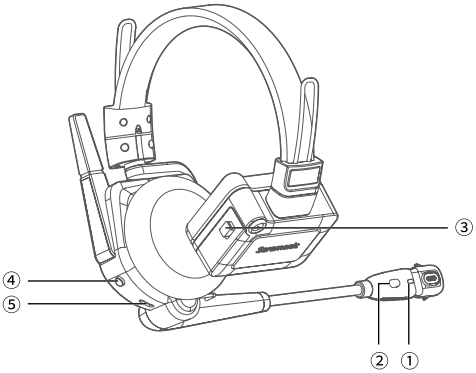

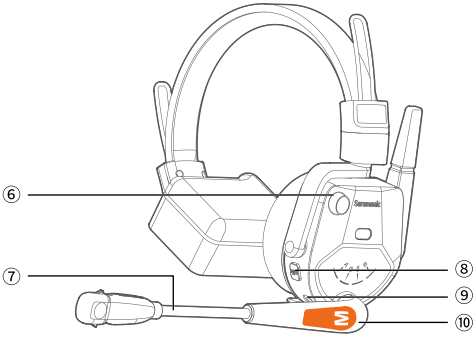

① Mic Indicator

② Environmental Noise Cancellation (ENC) Button

Operation	Status	Mic Indicator	Voice Prompt
Press once	Strong ENC	Static green	Strong
	Weak ENC	Static blue	Weak
Press and hold for 3 seconds	Cascade connection enabled	Static purple	No
	Cascade connection disabled	Back to previous status	No

• The headset defaults to weak noise cancellation mode.
• The cascade connection feature is turned off by default. For more details, please refer to " ⑨ TRRS Jack for Wired Link ".

③ Battery Compartment Switch

Slide down the battery compartment switch to open its cover, then remove the battery for charging or insert the battery for use.

④ Power Button

Press and hold for 2 seconds to power on or off. There is a voice prompt of "Power on" from the master headset if turned on, or a voice prompt of "Power off" if turned off.

⑤ USB-C Charging Port (5 V / 1 A)

For charging the headset.

⑥ Volume Control / Announce Button

Operation	Function	Voice prompt
Rotate clockwise	Increase volume	No
Rotate counter clockwise	Decrease volume	No
Press and hold	Enable Announce	Du

• By activating the Announce feature (the master headset only), the system will mute all paired remote headsets and their mic indicators will blink red slowly, allowing the whole team to hear the direct instructions or commands from the master headset.
• To use the Announce function, press and hold the Announce button to talk and then release the button to mute yourself. You can unmute yourself via the mute button or boom.

⑦ Boom

Operation	Function	Mic Indicator	Voice Prompt
Flip up	Mute on	Static red	Du
Fold down	Mute off	Static blue / green	Du

⑧ Mute Button

Operation	Function	Mic Indicator	Voice Prompt
Press once	Mute on	Static red	Du
	Mute off	Static blue / green	Du

⑨ TRRS Jack for Wired Link

• Plug in the link cable kit for cascade connection (sold separately) to connect the headset to a device with a TRRS jack, achieving audio monitoring at site.

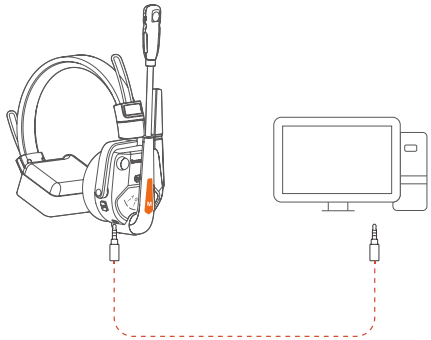

• Plug in the link cable kit to connect the master headset of the first WiTalk9 system to the remote headset of the second WiTalk9 system, accommodating expanded communication needs. It can be cascaded with up to 4 systems.

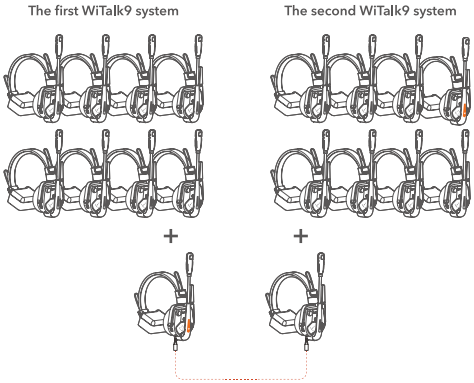

• Plug in the link cable kit to connect your phone or computer. With your phone or computer connected, the headset can attend any cloud conference anytime running on ZOOM, Tencent Meeting or other meeting applications on your phone or computer, bringing your remote and in-person teams together.
Note: You need to press and hold the ENC button for 3 seconds to turn the cascade connection on, allowing these two teams to communicate with each other.
In view of the compatibility of different smart phones, Saramonic suggests to use the USB-C adapter of the link cable kit with your smart phone.

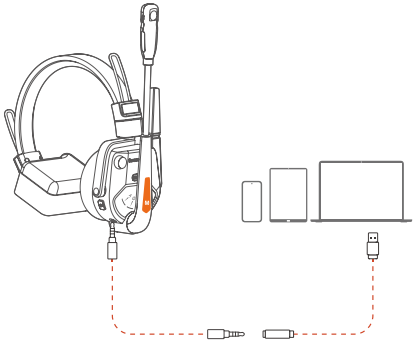

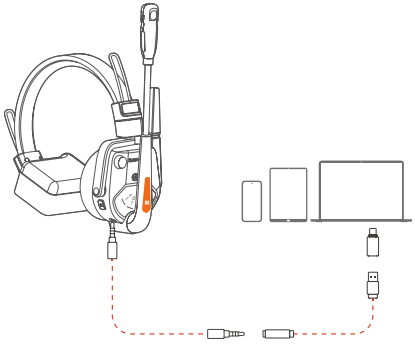

⑩ Nameplate for Master Headset (M)

Panel on Master Headset

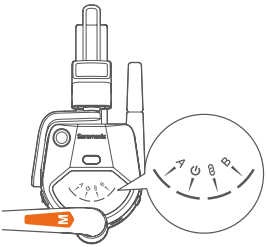

A Group A Indicator

Note: You need to purchase an HUB to activate it.

Power Indicator

Status	Power Indicator	Voice Prompt
Unpaired or not reconnected	Blinking blue slowly	No
Disconnected (beyond operating range)	Blinking blue slowly	No
Successfully paired or reconnected	Static blue	No
Charging via USB-C charging port	Static red	No
Fully charged	Static blue	No
Low battery (≤10%)	Blinking red rapidly	Battery level low (per 10 minutes)

• Remote headsets can NOT communicate with each other if the master headset is powered off.
• The master headset will automatically power off if unpaired for 30 minutes.
• With the master headset on, you can purchase a USB cable for charging while using.

Wireless Link Indicator

Only the master headset has the wireless link feature, and the remote headset does not have this feature. Press and hold the mute button on the master headset for 3 seconds to turn on its wireless link. Then you need to activate Bluetooth on your phone or computer, and search for WT9-M Audio to pair up. The master headset can be connected for listening to music, calls and cloud meetings from your phone or computer.

Status	Wireless Link Indicator	Voice Prompt
Wireless link on	Blinking blue rapidly	Pairing
Wireless link off	Back to previous status	No
Unpaired	Blinking blue slowly	No
Successfully paired	Static blue	Pairing success
Disconnected (beyond operating range)	Blinking blue rapidly	Disconnected
Unpaired or disconnected for 5 minutes	Off	No

Note: The link history will be cleared after the master headset is restarted.
The wireless link and wired link features can not be used simultaneously. If the wired link feature is activated and connected, its wireless link feature will be automatically disconnected.

B Group B Indicator

Note: You need to purchase an HUB to activate it.

WiTalk9 SRH Single-ear Remote Headset

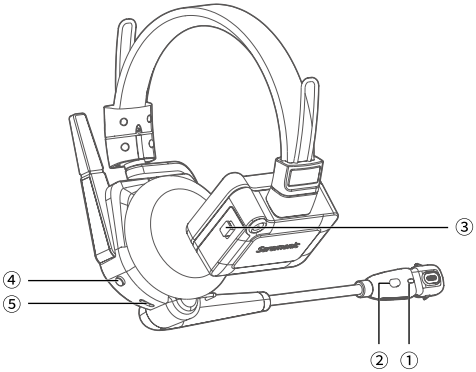

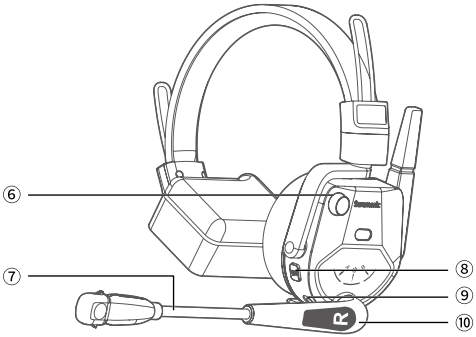

① Mic Indicator
② Environmental Noise Cancellation (ENC) Button

Operation	Status	Mic Indicator	Voice Prompt
Press once	Strong ENC	Static green	Strong
	Weak ENC	Static blue	Weak
Press and hold for 3 seconds	Cascade connection enabled	Static purple	No
	Cascade connection disabled	Back to previous status	No

• The headset defaults to weak noise cancellation mode.
• The cascade connection feature is turned off by default. For more details, please refer to " ⑨ TRRS Jack for Wired Link " of the master headset.

③ Battery Compartment Switch
Slide down the battery compartment switch to open its cover, then remove the battery for charging or insert the battery for use.
④ Power Button
Press and hold for 2 seconds to power on or off. There is a voice prompt of "Power on" or "Power off" from the remote headset.
⑤ USB-C Charging Port (5 V/1 A)
For charging the headset.
⑥ Volume Control / PTT Button

Operation	Function	Voice prompt
Rotate clockwise	Increase volume	No
Rotate counter clockwise	Decrease volume	No
Press and hold	Enable PTT	Du

If you are using the remote headset, and you do not want all your voice to be captured by the microphone when you have less frequent contact with your team, it is recommended to enable the PTT function. Once activated, press the volume control to talk, and then release to mute. You can unmute yourself by pressing the mute button once or folding down the boom.
⑦ Boom

Operation	Function	Mic Indicator	Voice Prompt
Flip up	Mute on	Static red	Du
Fold down	Mute off	Static blue / green	Du

⑧ Mute Button

Operation	Function	Mic Indicator	Voice Prompt
Press once	Mute on	Static red	Du
	Mute off	Static blue / green	Du

⑨ TRRS Jack for Wired Link
Its function is consistent with the TRRS jack for wired link of the master headset. For details, please refer to " ⑨ TRRS Jack for Wired Link" of the master headset.
⑩ Nameplate for Remote Headset (R)

Panel on Remote Headset

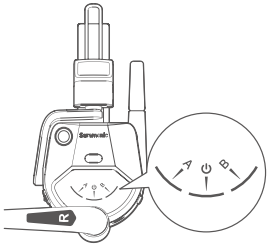

A Group A Indicator

Note: You need to purchase an HUB to activate it.

Power Indicator

Status	Power Indicator	Voice Prompt
Unpaired or not reconnected	Blinking blue slowly	No
Disconnected (beyond operating range)	Blinking blue slowly	Disconnected
Successfully paired or reconnected	Static blue	Connected
Charging via USB-C charging port	Static red	No
Fully charged	Static blue	No
Low battery (≤10%)	Blinking red rapidly	Battery level low (per 10 minutes)

• Remote headsets can NOT communicate with each other if the master headset is powered off.
• The remote headset will automatically power off if unpaired for 10 minutes.
• With the remote headset on, you can purchase a USB cable for charging while using.

B Group B Indicator

Note: You need to purchase an HUB to activate it.

Charging Case

When the charging case is connected to power, put batteries into it for charging.

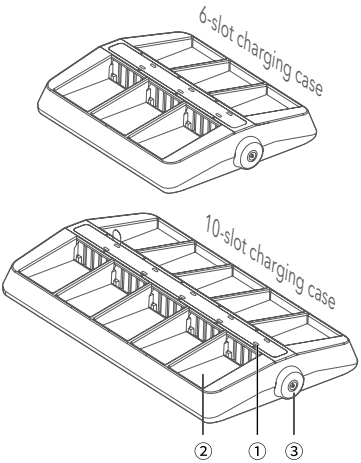

① **Charging Indicator**
Charging Fully charged
② **Slot for Battery**
③ **DC Jack with A Screw Nut**

Operation Guide

How to Wear

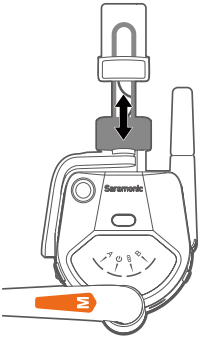

1. Adjust the headband for a comfortable fit according to your head size.
2. Flexible boom with 270-degree pivot range for left- or right-side wear.

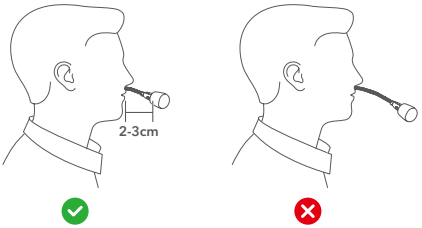

3. Position the microphone approximately 2 ~ 3 cm away from the edge of your mouth to avoid "popping" or other breath noise and do not place directly in front of your mouth.

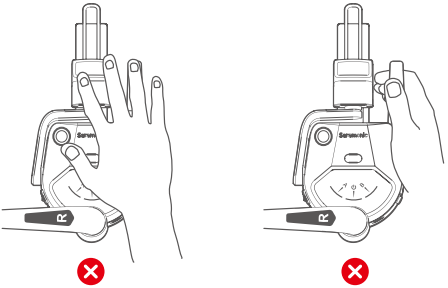

4. While using, please do not cover the antenna area shown in the figure above to avoid signal interference, and do not handle the antenna to avoid damage.

How to Use

The WiTalk9 system automatically pairs up right out of the box. Press and hold the power button for two seconds to turn on each headset to get used.

How to pair

The WiTalk9 system automatically pairs up right out of the box. If disconnection occurs, please follow the below steps:

Note: To ensure successful pairing, it is recommended to operate the master headset to forget paired headsets before manual pairing. For more details, please refer to"How to forget paired headsets" below.

(1) With the master headset off, press and hold its power button for 8 seconds until its power indicator blinks blue rapidly and music plays. Then the master headset will enter pairing mode.

(2) With the remote headset (1#) off, press and hold its power button for 8 seconds until its power indicator blinks blue rapidly and music plays. Then the remote headset (1#) will enter pairing mode. Follow this step to operate all remote headsets (2/3/4/5/6/7/8#) to enter pairing mode.

(3) If you hear a voice prompt of "Connected" from the remote headset (1#), the connection between this remote headset (1#) and the master headset is established. All remote headsets (2/3/4/5/6/7/8#) will pair with the master headset in sequence.

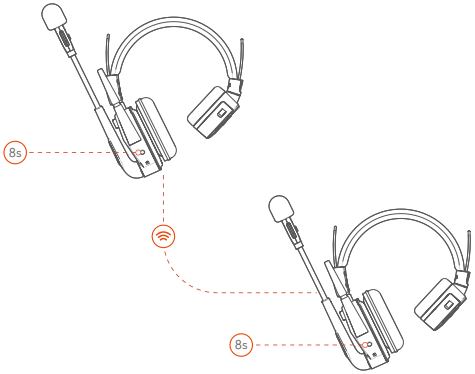

How to exit pairing

You will be ready to communicate with your team after the master headset exits pairing status. Its power indicator will glow static blue if the master headset exits pairing mode. Choose one of the following ways to exit pairing:

(1) The master headset will automatically exit pairing if it is fully paired (with 8 remote headsets).

(2) If the master headset is not fully paired, press its power button once to exit the pairing status.

How to forget paired headsets

With the master headset off, simultaneously press and hold its power button and mute button for 3 seconds until its power indicator blinks blue and red alternately, then it will forget all paired remote headsets. The master headset will automatically shut down after successful forgetting.

Note: If the master headset forgets paired headsets, all paired remote headsets will be forgotten and you do not need to operate remote headsets to forget the paired master headset.

Other Functions

Sidetone

Simultaneously press the volume control and mute button once to enable or disable the sidetone function, and a voice prompt of "du" will appear.

• Once this function is activated, you can hear yourself when you are speaking. There will be a hearing delay, which is normal.

• Make sure the headset is worn on your head once you activate this function, otherwise howling noise will appear.

• It is recommended that you do not enable the sidetone feature when the cascade connection is activated and connected. Otherwise, current sound will generate and bring you a bad audio experience.

• This function can NOT be enabled when the headset is muted.

Reset

With the master headset or remote headset off, press and hold the power button and volume control at the same time for 8 seconds to reset the headset. All its indicators will glow static blue while resetting. The master headset or remote headset will shut down and all its indicators will turn off after successful resetting.

App Control

Supports real-time monitoring of the current battery level of the device, connection status, and their names; Supports manually muting the remote headset, a separate 1 v 1 communication, and the Announce feature, the master headset pairing, the master headset forgetting paired headsets; Supports customized names, firmware updates for the device.

Wireless connection to Saramonic app:

Step1: Download Saramonic app on your phone or computer and launch it.

Step2: Enter the home page, click "Add Device" on the top left and search for Bluetooth, then click "WiTalk9" in the Bluetooth list to connect them.

Step3: Click "View Device" on the current page to enter the WiTalk9 device management page; Or return to the home page and click "Device Management" to enter the device management page.

Note: You need to open the Saramonic app, then search for and connect WiTalk9 in the Bluetooth list in the Saramonic app. If you directly search for and connect WiTalk9 in the Bluetooth list of your phone system, app control is not available. You need to disconnect them or forget this device, then follow the above steps to achieve app control.

Troubleshooting

If you encounter any problems while using the unit, please refer to the following first. If the problem still persists, please contact the dealer's after-sales service department.

• Failed to power on
Make sure the battery level of the headset is not low.

• The charging status does not be displayed when plugged into the charging cable
If the current battery level is full, try using the battery for a period of time.

• No music from the master headset in pairing mode
Make sure the master headset does not automatically reconnect with the last paired device (mobile phone / computer). You may press and hold its mute button for 3 seconds when the master headset is turned on, then you will hear the music when its wireless link indicator flashes blue and enters pairing mode.

• The master or remote headset automatically shuts down when the pairing is not completed
When not paired, the master headset will automatically shut down after 30 minutes and the remote headset will automatically shut down after 10 minutes. Therefore, turn it on and get started.

• The remote headset fails to reconnect with the master headset
The master headset may have forgotten paired headsets, and all paired headsets are forgotten. Therefore, you may pair them manually.

• No sound from the headset
(1) Make sure the master headset and the remote headset are paired up successfully.
(2) Make sure your headset is not muted. Its mic indicator glows red when muted. You can unmute it via pressing the mute button or folding down the boom.
(3) Make sure the headset is not muted by Saramonic app. If it is muted by this app, you need to unmute it by this app.

• The master and remote headsets have been paired but speaking voice cannot be heard
Make sure the master headset exits pairing mode.

FAQ

• Will the master and remote headset need to be paired again after resetting?
Yes. Resetting is to restore the current headset to default parameters, which will forget the paired headsets.

• Will link channels be muted when the master or remote headset are muted?
No. The mute function does not mute link channels.

• Will the voice prompt be heard by other headsets?
No. The voice prompt can only be heard in the current headset, and will not be transmitted to other headsets, or link channels.

• Will the remote headset need to re-establish the connection with the master headset if they are disconnected due to exceeding the operating range?
No. They will automatically reconnect within the operating range.

• Will the customized name of the remote headset that is renamed by Saramonic app be retained the next time when it reconnects with the master headset?
Yes.

• Can the Announce function be activated when the master headset is muted?
Yes, this function can be activated regardless of whether it is in mute mode or not.

• Can the PTT function be activated when the remote headset is muted?
Yes, this function can be activated regardless of whether it is in mute mode or not.

Specifications

WiTalk9 SMH Single-ear Master Headset / SRH Single-ear Remote Headset

Transmission Range	≥ 500 m
Modulation Mode	GFSK
Sampling Rate	16 kHz / 16-bit (with 8 remote headsets connection)
Voice Delay	≤ 83 ms (with 8 remote headsets connection)
Receiving Sensitivity	< -93 dB
Noise Cancellation Depth	50 dB
Frequency Response	150 Hz - 8 kHz
Signal-to-Noise Ratio	> 65 dB
Distortion	< 1%@94 dB SPL, 1 kHz
Microphone Type	Electret
Input SPL	> 100 dB SPL
Output SPL	128 dB
Replaceable Battery Capacity	1450 mAh
Power Requirements	Powered by a replaceable battery / USB-C charging port
Runtime	Master headset: ≥ 10 h (with 4 remote headsets connection); ≥ 9 h (with 8 remote headsets connection)
	Remote headset: ≥ 15 h
Charging Time	≤ 3.5 h (charging via USB-C port in shutdown mode)
Weight	228 g (on-ear foam cushion and battery included)
Working Temperature	-10℃ ~ 50℃
Storage Temperature	-20℃ ~ 55℃

6-Slot Charging Case

Port	DC jack
Dimensions	153×127×31 mm
Weight	192.5 g
Charging Power	< 20 W
Power Supply Range	12 V±10%
Current	< 1.6 A
Charging Time	≤ 3.5 h
Working Temperature	0℃ ~ 50℃
Storage Temperature	-10℃ ~ 60℃

10-Slot Charging Case

Interface	DC jack
Dimensions	231×127×31 mm
Weight	298 g
Charging Power	< 34 W
Power Supply Range	12 V±10%
Current	< 2.8 A
Charging Time	≤ 3.5 h
Working Temperature	0℃ ~ 50℃
Storage Temperature	-10℃ ~ 60℃

声明

请在使用前仔细阅读本手册，并严格按照说明进行操作和存储。请妥善保存好说明书以供将来参考。如果用户手册不能帮助您解决某些问题，请向零售商寻求帮助或给我们发送电子邮件：info@saramonic.com

注意事项

1. 请勿擅自拆开机壳；
2. 请勿将本机靠近热源，如加热器、烤箱或其他产生热量的设备；
3. 请使用柔软的干布清洁本设备；
4. 在使用和储存时，请注意防尘和防潮。
5. 为获得最佳拾音模式，请勿将手放在麦克风咪头上。

概述

WiTalk9 是一款九人全双工无线内通耳机系统，无线传输距离可达 500 米，满足您的多种使用需求。通过 App 可以实现 GPS 定位自动更改频率，满足当地网络要求和避免干扰问题。

ClearTalk™ 是 Saramonic 自研技术，三麦克风阵列降噪算法，实现 360 度全向降噪，轻 / 强降噪模式可选，有效隔绝噪音干扰，通话更清晰。自研 AGC 算法和大音量设计，即使身处 130 dB 大声压环境也能保证稳定通话，搭配航空级防护耳套，进一步有效隔绝环境噪音对通话的干扰。适用于影视制作、舞台表演、综艺录制、竞技赛场、消防演练等中大型活动场景。

耳机采用可拆卸锂电池供电，主机续航约 10 小时，从机续航时间约 15 小时。

特点

- 9 人全双工，无需 HUB 主站，开机即用，有线级联可扩至 30 人通话。
- 通过 Link 接口连接会议系统，可实现异地通话协作；主机也可无线连接手机，利用 4G/5G 漫游实时通话。
- 内外双天线设计，500 米范围稳定通话，避免信号干扰。
- ClearTalk™，自研三麦克风阵列降噪算法，实现 360 度降噪，轻 / 强降噪模式可选，确保通话更清晰。
- 自研 AGC 算法 + 大音量设计，130dB 大声压环境稳定通话。
- Saramonic 移动控制台，集纳常用功能，大图标、可视化，自动频段调整，无缝漫游，全球通用。
- 加密通话，安全可靠，不易串频。
- 丰富的配件拓展系统，包括耳罩、电池、充电坞。
- IPX5 防水等级，无惧阴雨天气影响，自研防风算法搭配麦克风海绵套，双重降风噪。
- 航空级冷凝耳套，物理隔音，低温冷凝材质，凉爽舒适。

可选套装

WiTalk9 预设多种配置版本，可根据团队人数按需选择。本手册适用于 WiTalk9 所有的套装。每个套装包含的内容如下：

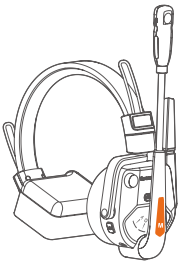

WiTalk9 SMH 单耳主机

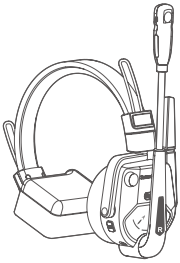

WiTalk9 SRH 单耳从机

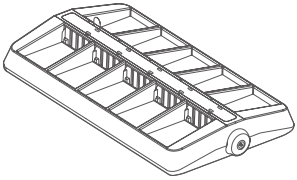

6 口 / 10 口充电座

可拆卸电池

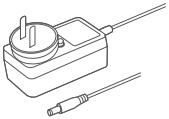

充电座电源适配器

压耳耳套

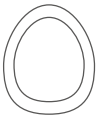

航空冷凝耳套

麦克风防风海绵

硬壳拉链包

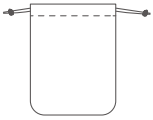

耳机收纳袋

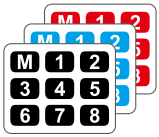

耳机数字贴纸

单独出售（级联线套件）

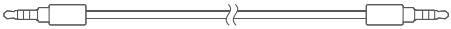

3.5 mm TRRS 转 TRRS 音频线

USB-A 转 USB-C 转接头

3.5 mm TRRS 母座转 USB-A 声卡

WiTalk9 WT2S

WiTalk9 SMH 单耳主机 (1)
WiTalk9 SRH 单耳从机 (1)
可拆卸电池 (4)
6 口充电座 (1)
充电座电源适配器 (1)
压耳耳套 (2)
航空冷凝耳套 (2)
魔术贴海绵垫 (2)
麦克风防风海绵 (2)
耳机数字贴纸 (3)
耳机收纳袋 (2)
硬壳拉链包 (1)

WiTalk 9 WT3S

WiTalk9 SMH 单耳主机 (1)
WiTalk9 SRH 单耳从机 (2)
可拆卸电池 (6)
6 口充电座 (1)
充电座电源适配器 (1)
压耳耳套 (3)
航空冷凝耳套 (3)
魔术贴海绵垫 (3)
麦克风防风海绵 (3)
耳机数字贴纸 (3)
耳机收纳袋 (3)
硬壳拉链包 (1)

WiTalk9 WT4S

WiTalk9 SMH 单耳主机 (1)
WiTalk9 SRH 单耳从机 (3)
可拆卸电池 (8)
10 口充电座 (1)
充电座电源适配器 (1)
压耳耳套 (4)
航空冷凝耳套 (4)
魔术贴海绵垫 (4)
麦克风防风海绵 (4)
耳机数字贴纸 (3)
耳机收纳袋 (4)
硬壳拉链包 (1)

WiTalk9 WT5S

WiTalk9 SMH 单耳主机 (1)
WiTalk9 SRH 单耳从机 (4)
可拆卸电池 (10)
10 口充电座 (1)
充电座电源适配器 (1)
压耳耳套 (5)
航空冷凝耳套 (5)
魔术贴海绵垫 (5)
麦克风防风海绵 (5)
耳机数字贴纸 (3)
耳机收纳袋 (5)
硬壳拉链包 (1)

WiTalk9 WT6S

WiTalk9 SMH 单耳主机 (1)
WiTalk9 SRH 单耳从机 (5)
可拆卸电池 (12)
10 口充电座 (1)
充电座电源适配器 (1)
压耳耳套 (6)
航空冷凝耳套 (6)
魔术贴海绵垫 (6)
麦克风防风海绵 (6)
耳机数字贴纸 (3)
耳机收纳袋 (6)
硬壳拉链包 (1)

WiTalk9 WT7S

WiTalk9 SMH 单耳主机 (1)
WiTalk9 SRH 单耳从机 (6)
可拆卸电池 (14)
10 口充电座 (1)
充电座电源适配器 (1)
压耳耳套 (7)
航空冷凝耳套 (7)
魔术贴海绵垫 (7)
麦克风防风海绵 (7)
耳机数字贴纸 (3)
耳机收纳袋 (7)
硬壳拉链包 (1)

WiTalk9 WT8S

WiTalk9 SMH 单耳主机 (1)
WiTalk9 SRH 单耳从机 (7)
可拆卸电池 (16)
10 口充电座 (1)
充电座电源适配器 (1)
压耳耳套 (8)
航空冷凝耳套 (8)
魔术贴海绵垫 (8)
麦克风防风海绵 (8)
耳机数字贴纸 (3)
耳机收纳袋 (8)
硬壳拉链包 (1)

WiTalk9 WT9S

WiTalk9 SMH 单耳主机 (1)
WiTalk9 SRH 单耳从机 (8)
可拆卸电池 (18)
10 口充电座 (1)
充电座电源适配器 (1)
压耳耳套 (9)
航空冷凝耳套 (9)
魔术贴海绵垫 (9)
麦克风防风海绵 (9)
耳机数字贴纸 (3)
耳机收纳袋 (9)
硬壳拉链包 (1)

产品结构

WiTalk9 SMH 单耳主机

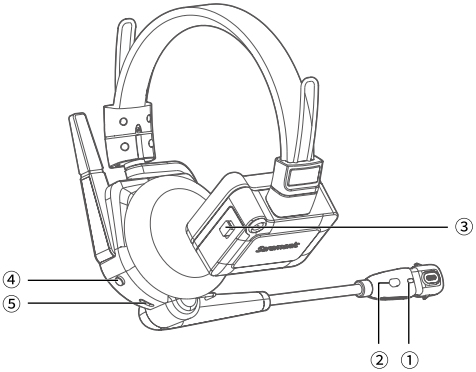

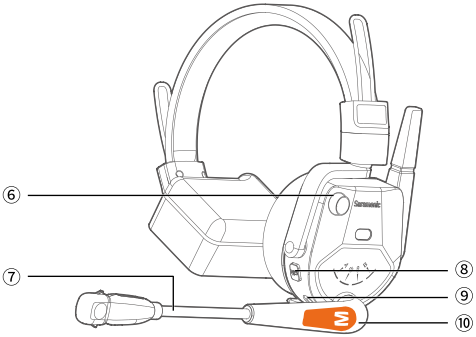

① 麦克风指示灯

② 降噪键

操作	功能	麦克风指示灯	提示音
单击	强降噪	绿灯常亮	Strong
	轻降噪	蓝灯常亮	Weak
长按 3 秒	级联功能开启	紫灯常亮	无
	级联功能关闭	恢复之前状态指示	无

• 出厂默认轻降噪模式。

• 级联功能默认关闭，详情请参考主机“⑨ TRRS 有线 Link 孔”。

③ 电池盖开关

向下滑动电池盖开关，电池盖弹开后可安装 / 取出电池。

④ 电源键

长按 2 秒开关机。开机会出现“Power on”的提示音，关机会出现“Power off”的提示音。

⑤ USB-C 充电口（5 V/1 A）

用于给耳机充电。

⑥ 音量旋钮 / 一键广播功能键

操作	功能	提示音
顺时针旋转	增大音量	无
逆时针旋转	减小音量	无
长按不松手	开启一键广播功能	嘟

• 若使用过程中，主机临时需要跟所有从机发布命令，可以长按音量键，开启一键广播功能后，此时所有连接的从机被禁止说话，只能听主机说话，从机麦克风指示灯呈红灯慢闪。

• 主机开启一键广播功能后，松手会自动进入静音状态，可手动拨动麦克风杆或单击静音键恢复。

⑦ 麦克风杆

操作	功能	麦克风指示灯	提示音
上翻	静音开启	红灯常亮	嘟
下翻	静音关闭	蓝 / 绿灯常亮	嘟

⑧ 静音键

操作	功能	麦克风指示灯	提示音
单击	静音开启	红灯常亮	嘟
	静音关闭	蓝 / 绿灯常亮	嘟

⑨ TRRS 有线 Link 孔

• 支持选配的级联线套件连接 TRRS 接口的设备，实现本地监听。

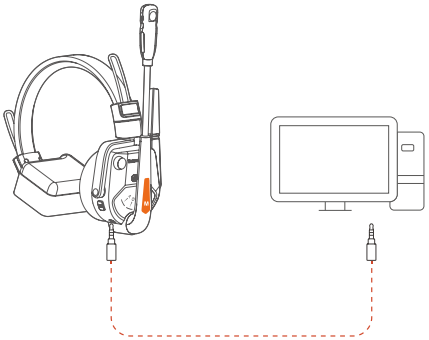

• 支持选配的级联线套件连接一套 WiTalk9 主机与另一套 WiTalk9 从机，实现扩展通话数量（最大支持 4 套）

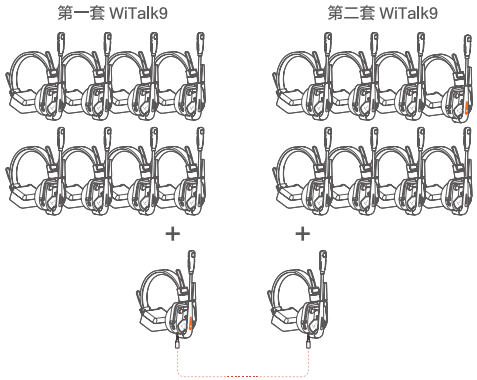

• 支持选配的级联线套件连接手机、电脑等设备参与远程会议，实现异地沟通。
注：级联功能开启，需要通过 3.5 mm TRRS 转 TRRS 音频线连接，然后长按降噪键 3 秒开启才能生效。
由于不同型号手机的耳机孔可能存在兼容性问题，Saramonic 官方建议通过级联线套件的 USB 接口连接到手机进行级联。

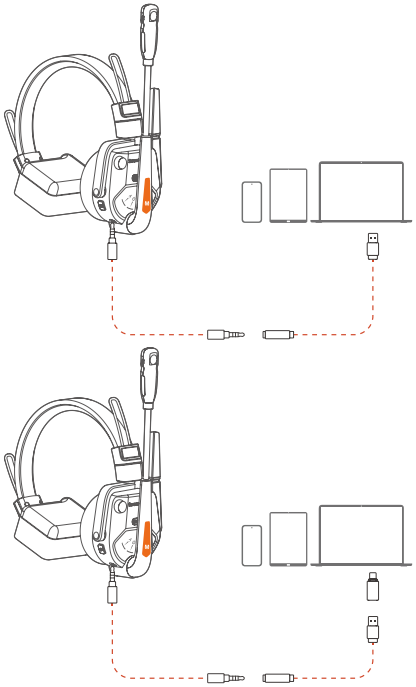

⑩ 主机铭牌（M）

WiTalk9 SMH 单耳主机面板

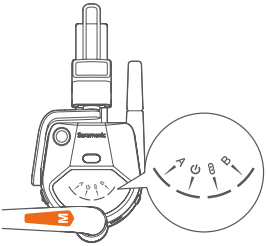

A A 组指示灯

注：需要购买主站设备才能激活。

⏻ 电源指示灯：

状态	电源指示灯	提示音
未连接 / 未回连	蓝灯慢闪	无
超距离断连	蓝灯慢闪	无
连接成功 / 自动回连	蓝灯常亮	无
充电中 (USB-C 充电口)	红灯常亮	无
充满电	蓝灯常亮	无
电量 ≤ 10%	红灯快闪	Battery level low (10 分钟 / 次)

• 主机关机后，从机之间无法通话。
• 若主机未与任何从机连接，30 分钟后将自动关机。
• 主机在开机状态下，支持外接充电线边充边用。

无线 Link 指示灯

长按主机静音键 3 秒开启无线 Link，在手机 / 电脑的蓝牙列表搜索并连接 WT9-M Audio，配对成功后可实现无线 4G/5G 漫游功能（从机没有此功能），支持听歌、打电话、远程会议等。

状态	无线 Link 指示灯	提示音
无线 Link 功能开启	蓝灯快闪	Pairing
无线 Link 功能关闭	恢复之前的指示状态	无
未连接	蓝灯慢闪	无
已连接	蓝灯常亮	Pairing success
超距离断开	蓝灯快闪	Disconnected
未连接 / 超距离断开 5 分钟	熄灭	无

注：重新开关机后，主机的 Link 连接信息会被清除。
有线 Link 和无线 Link 不可同时使用，主机有线 Link 功能开启并连接，无线 Link 功能将自动断开连接。

B B 组指示灯

注：需要购买主站设备才能激活。

WiTalk9 SRH 单耳从机

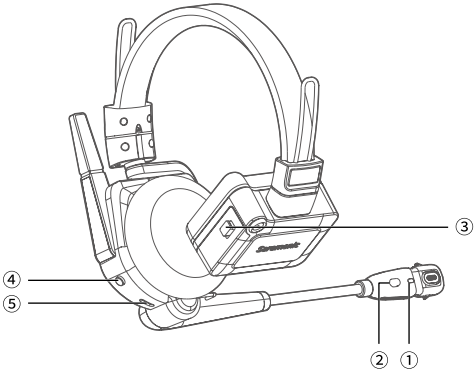

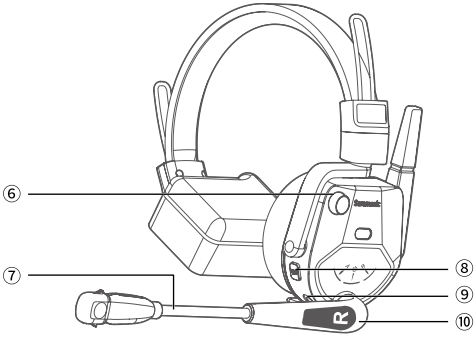

① 麦克风指示灯

② 降噪键

操作	功能	麦克风指示灯	提示音
单击	强降噪	绿灯常亮	Strong
	轻降噪	蓝灯常亮	Weak
长按 3 秒	级联功能开启	紫灯常亮	无
	级联功能关闭	恢复之前状态指示	无

- 出厂默认轻降噪模式。
- 级联功能默认关闭，详情请参考主机“⑨ TRRS 有线 Link 孔”。

③ 电池盖开关

向下滑动电池盖开关，电池盖弹开后可安装 / 取出电池。

④ 电源键

长按 2 秒开关机。开机会出现“Power on”的提示音，关机会出现“Power off”的提示音。

⑤ USB-C 充电口（5 V/1 A）

用于给耳机充电。

⑥ 音量旋钮 /PTT 功能键

操作	功能	提示音
顺时针旋转	增大音量	无
逆时针旋转	减小音量	无
长按不松手	开启 PTT 功能	嘟

若使用过程中不希望无关声音被拾取，同时又有频繁短暂的沟通需求，从机可使用 PTT 功能，松手自动进入静音状态。（可通过单击静音键或者拨动麦克风杆恢复）

⑦ 麦克风杆

操作	功能	麦克风指示灯	提示音
上翻	静音开启	红灯常亮	嘟
下翻	静音关闭	蓝 / 绿灯常亮	嘟

⑧ 静音键

操作	功能	麦克风指示灯	提示音
单击	静音开启	红灯常亮	嘟
	静音关闭	蓝 / 绿灯常亮	嘟

⑨ TRRS 有线 Link 孔

功能与主机的 TRRS 有线 Link 孔一致，详情请参考主机“⑨ TRRS 有线 Link 孔”。

⑩ 从机铭牌（R）

WiTalk9 SRH 单耳从机面板

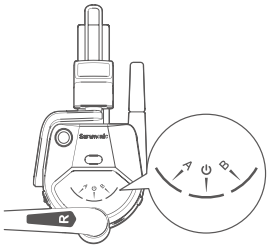

A A 组指示灯

注：需要购买主站设备才能激活。

⏻ 电源指示灯

状态	指示灯	提示音
未连接 / 未回连	蓝灯慢闪	无
超距离断连	蓝灯慢闪	Disconnected
连接成功 / 自动回连	蓝灯常亮	Connected
充电中 (USB-C 充电口)	红灯常亮	无
充满电	蓝灯常亮	无
低电量 ≤ 10%	红灯快闪	Battery level low (10 分钟 / 次)

- 主机关机后，从机之间无法通话。
- 若从机与主机未连接或未回连成功，10 分钟后将自动关机。
- 从耳机在开机状态下，支持外接充电线边充边用。

B B 组指示灯

注：需要购买主站设备才能激活。

电池充电座

电池充电座通电状态下，将耳机电池放入充电座内即可为电池充电。

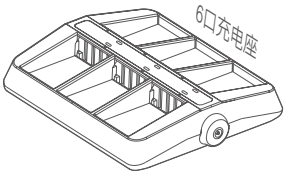

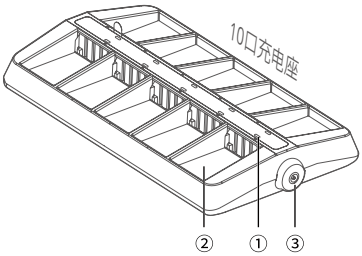

① **充电指示灯**

充电中　　充满电

② **充电槽**

③ **带锁直流电源插孔**

操作指南

耳机佩戴

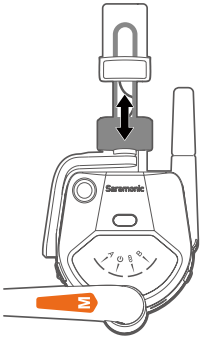

1. 根据自己的头型调整如图所示调整至舒适位置。
2. 麦克风杆可旋转 270°，耳机左右两侧佩戴均可。

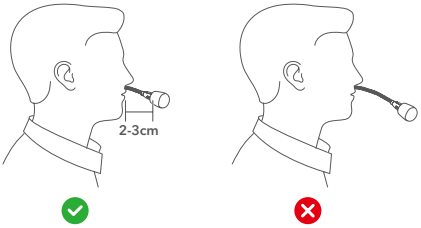

3. 调整麦克风的角度，麦克风咪头放在嘴角前约 2 ~ 3 cm 处。请勿将麦克风直接放在嘴的正前方，避免出现“噗”声或其它呼吸噪声。

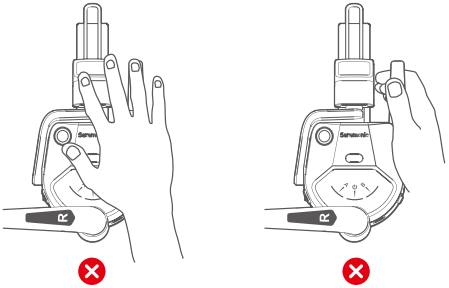

4. 使用时，请不要用手遮挡天线区域，避免信号干扰；请不要用手拎着天线，避免天线损坏。

如何使用

开箱即用，依次长按各耳机电源键 2 秒开机后即可通话。

如何对码

开箱即用，默认自动回连出厂预设的设备。若无成功连接，请进行如下配对操作：

注：为保证配对成功，每次配对前请对主机进行清码操作，详情请参考下面“如何清除对码”。

（1）关机状态下，长按主机电源键 8 秒，待主机电源指示灯呈蓝色快闪且背景音乐响起后松手，即进入对码状态。

（2）关机状态下，长按从机（1#）电源键 8 秒，待从机（1#）电源指示灯呈蓝色快闪且背景音乐响起后松手，即进入对码状态。从机（2/3/4/5/6/7/8#）依次进行操作，使所有从机都进入对码状态。

（3）若从机（1#）听到“Connected”提示音，则从机（1#）与主机对码成功。从机（2/3/4/5/6/7/8#）将依次与主机对码成功。

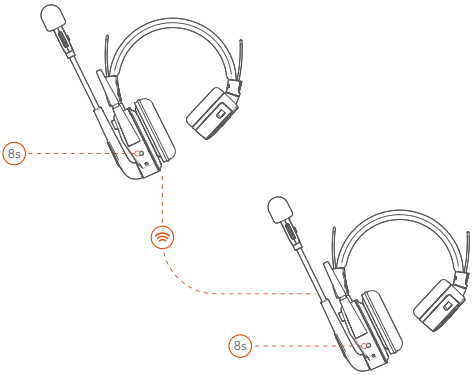

如何退出对码

对码成功后主机需退出对码状态，主从机之间才可通话。退出对码后，主机电源指示灯由蓝灯快闪转为蓝灯常亮，可通过以下方式退出对码状态：

(1) 主机一拖八对满后自动退出对码状态。

(2) 若主机未对满，短按一次主机电源键即可退出对码状态。

如何清除对码

关机状态下，同时长按主机电源键和静音键 3 秒，待主机电源指示灯呈红蓝交替快闪后松手，此时设备进入清码状态。清码成功后产品会自动关机。

注：主机一键清码会将所有与主机对码的从机全部清码；主机清码完成后，从机会自动清码，无需单独清码。

其他功能

侧音功能

同时单击音量旋钮和静音键开启 / 关闭侧音功能，会出现“嘟”的提示音。

- 侧音功能开启后，通话时能听到自己说话的声音。会存在听感延时，此为正常现象。
- 侧音功能开启后，耳机必须要戴在头上，否则会出现啸叫。
- 耳机在级联模式下，建议不要开启侧音，否则会产生电流声，影响体验。
- 耳机处于静音状态时，侧音功能将无法开启。

恢复出厂设置

主、从机在关机状态下，同时长按电源键和音量旋钮 8 秒即可恢复出厂设置。恢复出厂设置时，耳机所有的指示灯皆呈蓝灯常亮。恢复出厂设置成功后，所有指示灯熄灭，产品自动关机。

App 控制

支持实时监看设备当前电量、连接状态、名称；支持对连接的从机进行手动静音、1v1 通话，一键广播功能；支持对设备进行自定义名称、固件升级；也支持对主机进行一键对码、一键清码等功能。

无线连接 App 操作：

步骤一：在手机或电脑 App 应用市场下载 Saramonic。

步骤二：打开 Saramonic App 进入首页，点击左上角“添加设备”并搜索蓝牙，在蓝牙列表中点击 WiTalk9 即可建立连接。

步骤三：点击当前页“查看设备”即可进入 WiTalk9 设备控制页面；或返回主页，点击“设备管理”也可进入设备控制页面。

注：若直接在手机系统的蓝牙列表中搜索并连接 WiTalk9，不能实现 App 控制。需打开 Saramonic App，然后在 App 里的蓝牙列表中搜索并连接 WiTalk9 才能实现 App 控制。若在手机系统的蓝牙列表中搜索并连接了 WiTalk9，需要断开或者忽略掉此设备。然后在 Saramonic App 里面进行相应操作。

故障排除

在使用过程中出现任何问题，请参照下列条款加以解决。如果问题仍然存在，请联系经销商售后服务。

• 无法开机

检查耳机电池电量是否过低，可将电池取出更换后即可正常开机使用。

• 产品连接充电线不显示充电状态

检查耳机当前电池电量是否满电。若满电状态，请将该电池使用一段时间后重新连接充电线即可显示充电状态。

• 主机进入对码状态时无对码背景音乐

检查主机无线 Link 是否自动回连了最近一次配对的手机 / 电脑。若无线 Link 自动回连，长按主机静音键 3 秒，无线 Link 指示灯蓝灯快闪，重新进入对码后背景音乐将恢复正常。

• 主 / 从机未完成对码自动关机

主机未与任意从机连接，30 分钟后将自动关机。从机与主机未连接或未回连成功，10 分钟后将自动关机。将主、从机重新开机后对码成功即可正常使用。

• 从机不回连主机

主机可能进行了清码操作，清码会将所有在线与离线已对码从机全部清码。因此将从机与主机重新对码即可。

• 麦克风无声音

（1）确保主、从机已配对成功。若未配对，需进行对码操作。

（2）确保耳机没有被静音，静音时麦克风指示灯为红灯常亮。可通过单击静音键或者拨动麦克风杆取消静音。

（3）在 App 上检查是否将对应的从机静音，需要在 App 上手动解除。

• 主机与从机已配对成功但无法通话

配对成功后需将主机退出对码状态才能通话。

常见问题

• 主 / 从机恢复出厂设置后需要重新对码吗？
需要。恢复出厂设置是将当前主 / 从机恢复到出厂预设的默认参数，连接信息也会被清除。

• 主 / 从机 Link 时静音，Link 语音通道也会被静音吗？
不会。静音功能不禁 Link 语音通道。

• 提示音会传给其它与主机 / 从机吗？
不会。提示音仅当前耳机内可以听到，不会传给其它主 / 从机或 Link 远端。

• 从机超出使用距离后断开连接，需要重新对码才可以与主机重新建立连接吗？
不需要。超距离断开连接后，从机重新进入使用距离范围内会自动回连主机。

• 通过 App 给从机重命名，下次该从机回连后从机名会被保留吗？
会的。

• 主机静音状态可以开启一键广播功能吗？
可以。无论是否处于静音状态，主机开启一键广播功能后都会被激活。

• 从机静音状态可以开启 PTT 功能吗？
可以。无论是否处于静音状态，从机 PTT 功能开启后都会被激活。

参数

WiTalk9 SMH 单耳主机 /WiTalk9 SRH 单耳从机

传输距离	≥ 500 米
信号调制	GFSK
通话采样率	16 kHz / 16-bit（一拖八）
延迟	≤ 83 ms（一拖八）
接收灵敏度	< -93 dB
通话灭噪深度	50 dB
频率响应	150 Hz - 8 kHz
信噪比	> 65 dB
失真	< 1%@94 dB SPL，1 kHz
麦克风类型	驻极体
输入声压级	>100 dB SPL
输出声压级	128 dB
可拆卸电池容量	1450 mAh
供电方式	可拆卸电池供电 / USB-C 充电口充电
续航时长	主耳机 : ≥ 10 h(一拖四); ≥ 9 h(一拖八)
	从耳机： ≥ 15 h
充电时长	≤ 3.5 h（关机状态下 USB-C 充电口充电）
重量	228 g（含电池和压耳耳套）
工作温度	-10℃ ~ 50℃
存储温度	-20℃ ~ 55℃

6 口充电座

接口	DC 插孔
尺寸	153 x 127 x 31 mm
重量	192.5 g
充电功率	< 20 W
供电范围	12 V ± 10%
充电电流	< 1.6 A
充电时间	≤3.5 h
工作温度	0℃ ~ 50℃
储存温度	-10℃ ~ 60℃

10 口充电座

接口	DC 插孔
尺寸	231 x 127 x 31 mm
重量	298 g
充电功率	< 34 W
供电范围	12 V ± 10%
充电电流	< 2.8 A
充电时间	≤ 3.5 h
工作温度	0℃ ~ 50℃
储存温度	-10℃ ~ 60℃

For better recording experience, the application **Saramonic** is recommended.

为获得更好的录制体验，推荐使用枫笛 Saramonic 自主研发应用软件 **Saramonic**。

扫码关注官方小红书　扫码关注微信公众号

Shenzhen Jiayz Photo Industrial., Ltd
深圳市长丰影像器材有限公司

A16 Building, Intelligent Terminal Industrial Park of Silicon Valley Power, Guanlan, Longhua District, Shenzhen, China
深圳市龙华区观澜街道大富工业区硅谷动力智能终端产业园A16栋

400-613-1096　www.saramonic.com　info@saramonic.com