nedis

TVWM5350BK

INSTALLATION INSTRUCTION

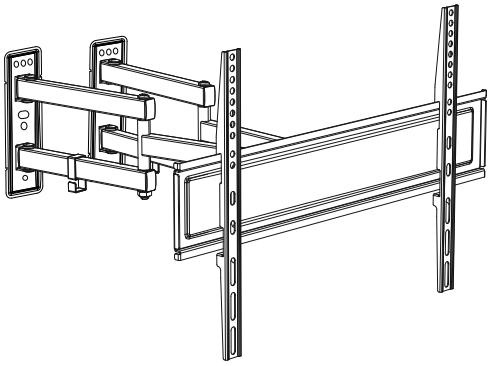

most 32"-70" | VESA Compatible Max 600X400 | max 35kgs/77lbs

CAUTION: DO NOT EXCEED MAXIMUM LISTED WEIGHT CAPACITY. SERIOUS INJURY OR PROPERTY DAMAGE MAY OCCUR!

Parts List

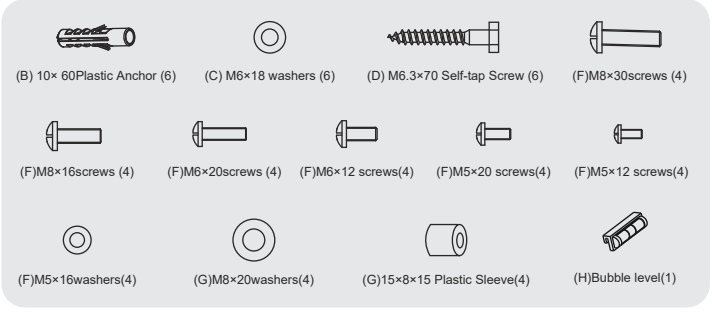

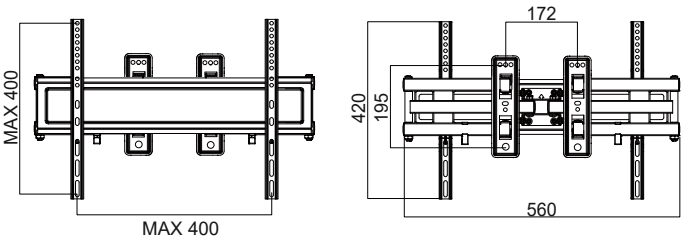

If the width of the TV is smaller than the size of the bracket, the bracket will be exposed outside the TV when the bracket is retracted to the shortest distance from the wall

1-a For Wood Stud Wall Mounting

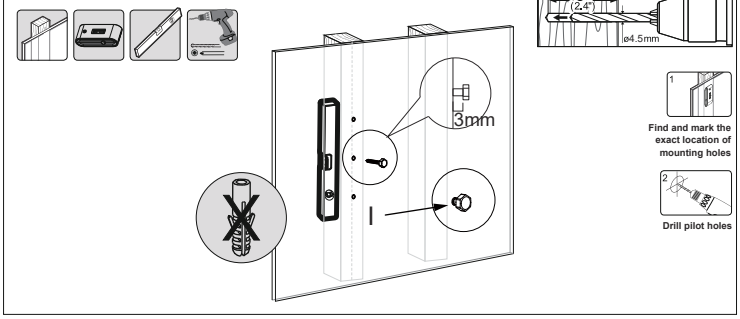

1-b For Solid Brick and Concrete Mounting

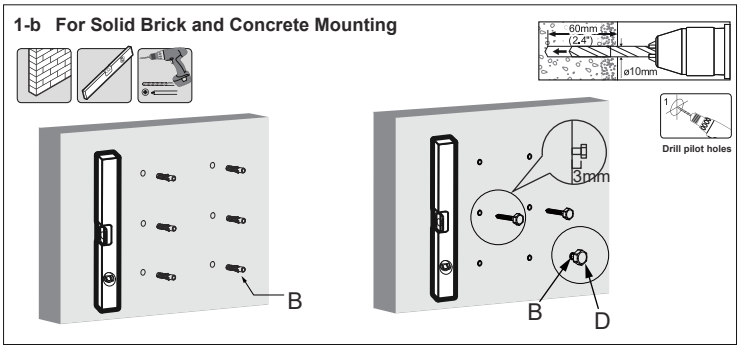

2-a Wall Panel Installation

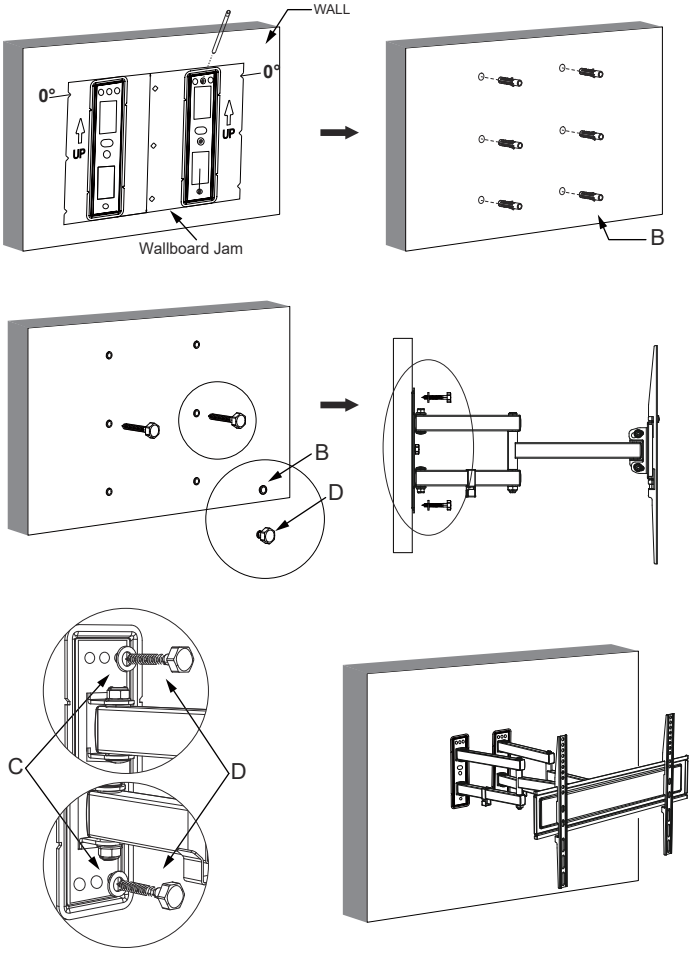

2-b Wall Panel Installation

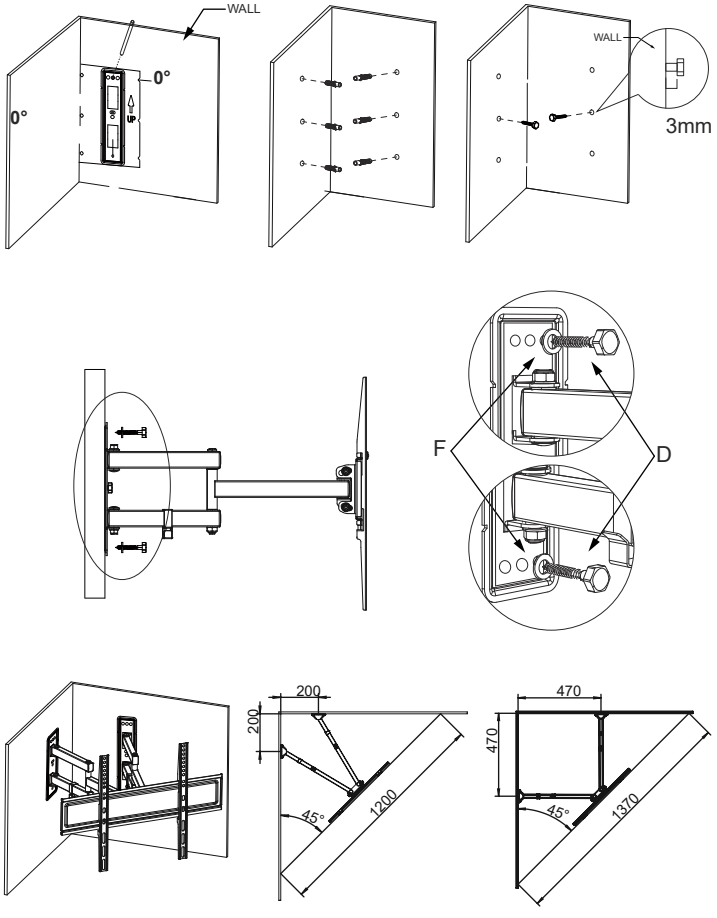

Pay attention to the length of the TV, so as not to hit the wall

2-c Wall Panel Installation

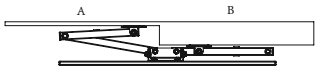

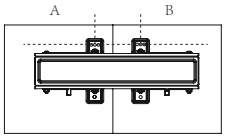

Place the product on the wall to determine the location, and then use the paper card to guide the hole

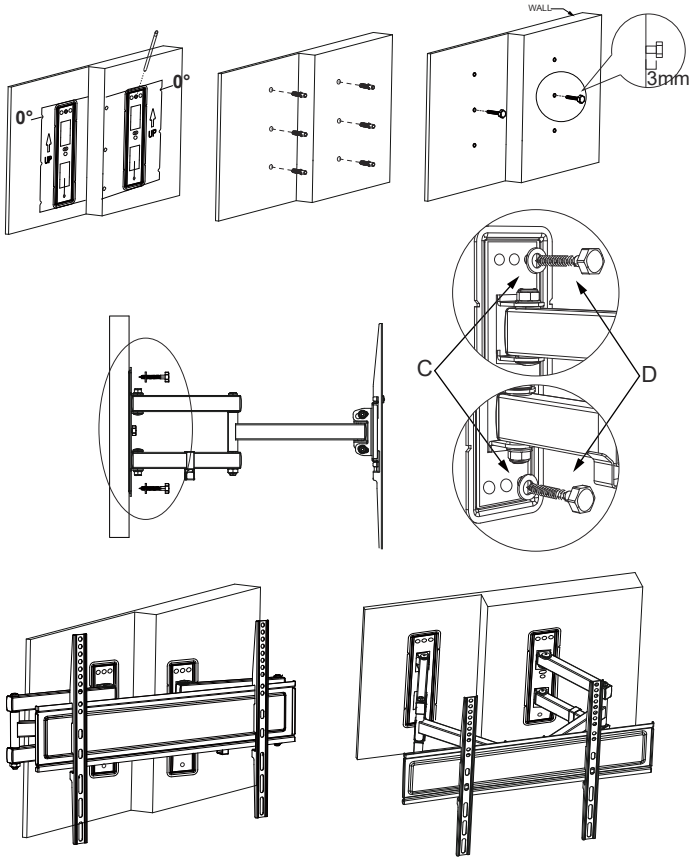

3-1 Installing the Display

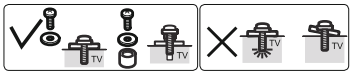

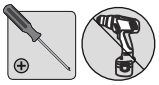

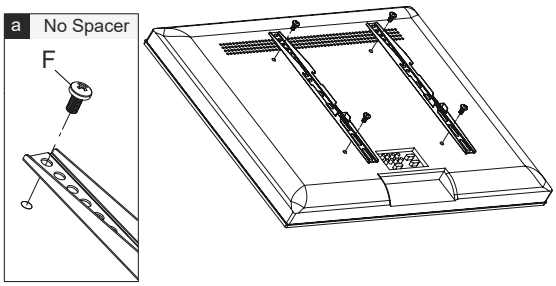

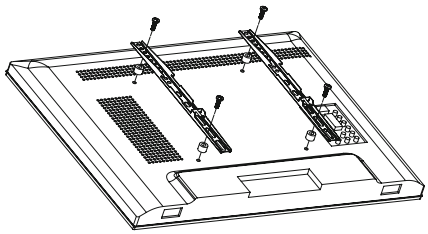

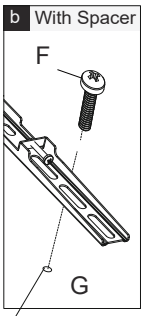

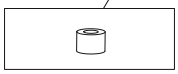

Use spacers between bracket and TV to increase space, use spacer behind the bracket to take up additional slack.

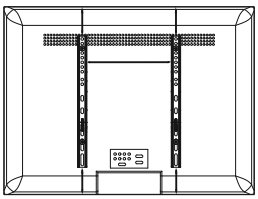

Ensure both tv brackets are EQUALLY CENTERED on your TV AND securely fastened in place.

3-2 Installing the Display

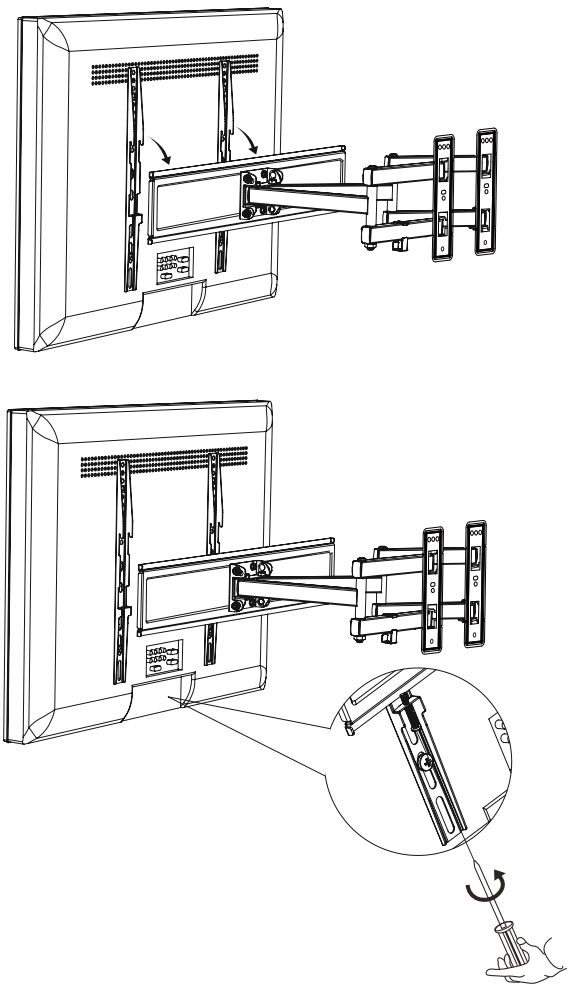
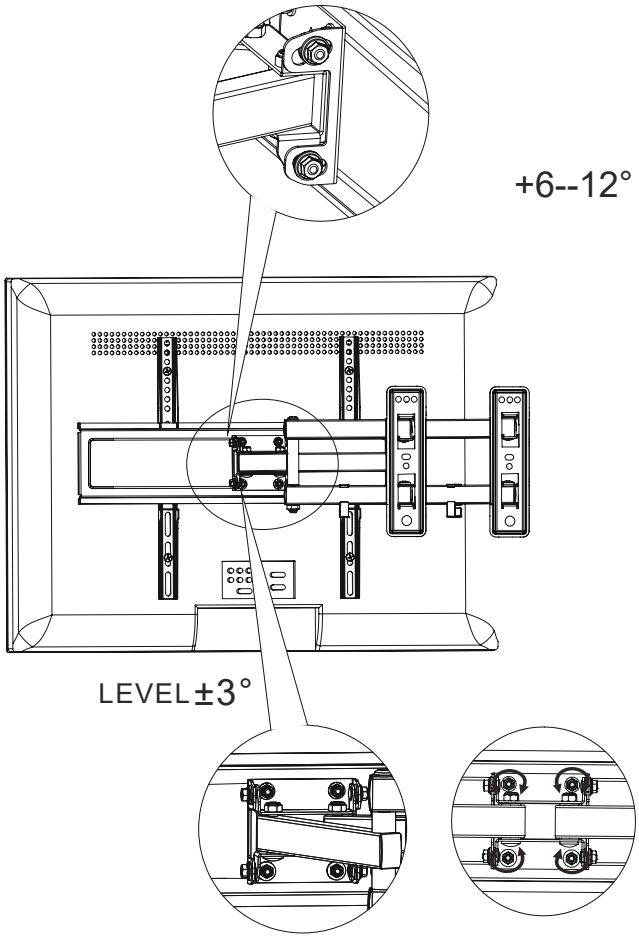
3-3 Installing the Display