YAMAHA

PORTABLE PA SYSTEM / SYSTÈME DE SONORISATION PORTATIF
SISTEMA DE PA PORTÁTIL / ПОРТАТИВНАЯ СИСТЕМА ЗВУКОУСИЛЕНИЯ
便携式 PA 音箱 / 可攜式 PA 系統 / 포터블 PA 시스템 / ポータブル PA システム

STAGEPAS 200 BTR
STAGEPAS 200

EN Owner's Manual
DE Benutzerhandbuch
FR Mode d'emploi
ES Manual de instrucciones
PT Manual do Proprietário
IT Manuale di istruzioni
RU Руководство пользователя
ZH-CN 使用说明书
ZH-TW 使用說明書
KO 사용설명서
JA 取扱説明書

English
Deutsch
Français
Español
Português
Italiano
Русский
简体中文
繁體中文
한국어
日本語

COMPLIANCE INFORMATION STATEMENT
(Supplier's declaration of conformity procedure)

Responsible Party: Yamaha Corporation of America
Address: 6600 Orangethorpe Ave., Buena Park, Calif. 90620
Telephone: 714-522-9011
Type of Equipment: PORTABLE PA SYSTEM
Model Name: STAGEPAS 200BTR, STAGEPAS 200

This device complies with Part 15 of the FCC Rules.
Operation is subject to two following conditions:
1) this device may not cause harmful interference, and
2) this device must accept any interference received including interference that may cause undesired operation.

(529-M02 FCC sdoc YCA 01)

FCC INFORMATION (U.S.A.)

1. **IMPORTANT NOTICE: DO NOT MODIFY THIS UNIT!**
   This product, when installed as indicated in the instructions contained in this manual, meets FCC requirements. Modifications not expressly approved by Yamaha may void your authority, granted by the FCC, to use the product.
2. **IMPORTANT:** When connecting this product to accessories and/or another product use only high quality shielded cables. Cable/s supplied with this product MUST be used. Follow all installation instructions. Failure to follow instructions could void your FCC authorization to use this product in the USA.
3. **NOTE:** This product has been tested and found to comply with the requirements listed in FCC Regulations, Part 15 for Class "B" digital devices. Compliance with these requirements provides a reasonable level of assurance that your use of this product in a residential environment will not result in harmful interference with other electronic devices. This equipment generates/uses radio frequencies and, if not installed and used according to the instructions found in the users manual, may cause interference harmful to the operation of other electronic devices. Compliance with FCC regulations does not guarantee that interference will not occur in all installations. If this product is found to be the source of interference, which can be determined by turning the unit "OFF" and "ON", please try to eliminate the problem by using one of the following measures:
   - Relocate either this product or the device that is being affected by the interference.
   - Utilize power outlets that are on different branch (circuit breaker or fuse) circuits or install AC line filter/s.
   - In the case of radio or TV interference, relocate/reorient the antenna. If the antenna lead-in is 300 ohm ribbon lead, change the lead-in to co-axial type cable.

If these corrective measures do not produce satisfactory results, please contact the local retailer authorized to distribute this type of product. If you cannot locate the appropriate retailer, please contact Yamaha Corporation of America, 6600 Orangethorpe Ave., Buena Park, CA90620, USA.

The above statements apply ONLY to those products distributed by Yamaha Corporation of America or its subsidiaries.

(529-M04 FCC class B YCA 01)

Introduction

Thank you for purchasing the Yamaha STAGEPAS 200BTR or STAGEPAS 200 portable PA System! This product is designed to amplify music or speech at live performances or other events. This Owner's Manual explains how to set up and operate the product to amplify music or speech. To get the most out of this product and enjoy its wide range of sophisticated features, we recommend that you read this manual thoroughly and keep it in a safe place for future reference.

Features

- **Compact body equipped with an 8-inch coaxial speaker**
  The compact-body speaker offers high sound quality and sufficient sound pressure that would match industry standards. This performance is achieved by using a 2-way coaxial speaker comprised of an 8-inch woofer and a compression driver, as well as biamping capabilities, to provide total power in the 200 watt range.
- **Flexible installation**
  A tilting mechanism with rubber feet is useful for monitor speaker applications, offering various setup possibilities.
- **Easy sound production via a built-in digital mixer**
  The built-in mixer features four input channels (MIC/LINE × 3; STEREO × 1) that can accommodate a small-size band. The unit is also equipped with control knobs that facilitate complex processes. This feature includes "1-knob EQ™" and "1-knob preset," which enables you to use only one knob to process multiple audio signals.
  The product also features guitar effects, feedback suppression, and a ducking function, which are useful for solo performances, such as singing while playing an acoustic guitar.
- **Bluetooth connectivity**
  You can play music through this product or control its parameters from your smartphone connected to the unit via Bluetooth®.
- **High-capacity lithium ion battery**
  The high-capacity lithium ion battery installed in the unit is a life savior in an environment where access to a power supply is difficult.

Package contents

- Rechargeable lithium ion battery pack
  BTR-STP200 × 1
  (Included only with the STAGEPAS 200BTR. Not included with the STAGEPAS 200.)
- Power cord × 1
- Owner's Manual (this book)

Optional items

- Rechargeable lithium ion battery pack BTR-STP200

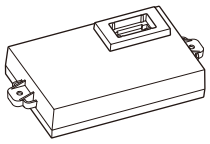

  * Included with the STAGEPAS 200BTR.
  * You can use this battery with the STAGEPAS 200.

- CASE-STP200 (dedicated carrying case)

STAGEPAS Controller (dedicated application software)

STAGEPAS Controller is application software that enables you to control this product via Bluetooth from your mobile device, such as a smartphone or tablet. STAGEPAS Controller lets you remotely adjust the parameters wirelessly and monitor the meters and indicators of this product. It also features some music player functions, such as a Cued Mode function that engages the unit in stand-by mode until the song starts. This function is very useful when you are busy singing and playing.
For information on how to download STAGEPAS Controller, please refer to the following Yamaha Pro Audio website:
https://www.yamahaproaudio.com/

Contents

Introduction **4**
Features 4
Package contents 4
Optional items 4
STAGEPAS Controller (dedicated application software) .. 4

PRECAUTIONS **6**

NOTICE **8**

Information **8**

Controls and Functions **9**
Top panel 9
Rear panel 12

Installing and Removing the Battery **13**
Installing the battery 13
Removing the battery 14

Charging the Battery **15**
List of battery-related indicators 15

Installing the Unit **16**
Installing the unit horizontally on the floor 16
Using the rubber feet to tilt the unit 16

Quick Start Guide **18**
Connecting microphones, musical instruments, or audio devices to the built-in mixer 18
Getting sound 18

Connecting Multiple Units of This Product .. **19**

Playing Bluetooth® Audio **20**
Registering (pairing) a Bluetooth® device 20
Connecting a Bluetooth® device 20
Playing audio files stored on a Bluetooth® device 20
Disconnecting the Bluetooth® device 20

Controlling the Unit from STAGEPAS Controller **21**
Connecting STAGEPAS Controller 21
Disconnecting STAGEPAS Controller 21
Maintaining the STAGEPAS Controller settings 21

Initializing the Settings for This Product **22**

Storing the Unit **22**

Troubleshooting **23**

General Specifications **24**
Input Characteristics 25
Output Characteristics 25
Dimensions 26
Block Diagram 27

PRECAUTIONS

PLEASE READ CAREFULLY BEFORE PROCEEDING

Please keep this manual in a safe place for future reference.

⚠ *WARNING*

Always follow the basic precautions listed below to avoid the possibility of serious injury or even death from electrical shock, short-circuiting, damages, fire or other hazards. These precautions include, but are not limited to, the following:

If you notice any abnormality

- If any of the following problems occur, immediately turn off the power switch and disconnect the electric plug from the outlet. If you are using batteries, remove all batteries from the product.
  - The power cord or plug becomes frayed or damaged.
  - Unusual smells or smoke are emitted.
  - Some object, or water has been dropped into the product.
  - There is a sudden loss of sound during use of the product.
  - Cracks or other visible damage appear on the product.

  Then have the product inspected or repaired by qualified Yamaha service personnel.

Power supply

- Do not place the power cord near heat sources such as heaters or radiators, and do not excessively bend or otherwise damage the cord, place heavy objects on it, or place it in a position where anyone could walk on, trip over, or roll anything over it.
- Only use the voltage specified as correct for the product. The required voltage is printed on the name plate of the product.
- Use only the supplied power cord/plug.
  If you intend to use the product in an area other than in the one you purchased, the included power cord may not be compatible. Please check with your Yamaha dealer.
- Check the electric plug periodically and remove any dirt or dust which may have accumulated on it.
- Make sure to fully insert the electric plug to prevent electric shocks or fire.
- When setting up the product, make sure that the AC outlet you are using is easily accessible. If some trouble or malfunction occurs, immediately turn off the power switch and disconnect the plug from the outlet. Even when the power switch is turned off, as long as the power cord is not unplugged from the wall AC outlet, the product will not be disconnected from the power source.
- Remove the electric plug from the outlet when the product is not to be used for extended periods of time.
- Do not touch the product or the electric plug during an electrical storm.
- Be sure to connect to an appropriate outlet with a protective grounding connection. Improper grounding can result in electrical shock, fire, or damage.

Do not open

- This product contains no user-serviceable parts. Do not attempt to disassemble the internal parts or modify them in any way.

Water warning

- Do not expose the product to rain, use it near water or in damp or wet conditions, or place on it any containers (such as vases, bottles or glasses) containing liquids which might spill into any openings.
- Never insert or remove an electric plug with wet hands.

Fire warning

- Do not place any burning items or open flames near the product, since they may cause a fire.

Hearing loss

- Before turning the power of all devices on or off, make sure that all volume levels are set to the minimum. Failing to do so may result in hearing loss, electric shock, or device damage.
- When turning on the AC power in your audio system, always turn on the product LAST, to avoid hearing loss and speaker damage. When turning the power off, the product should be turned off FIRST for the same reason.

Battery

- This product contains no user-serviceable parts. Do not attempt to disassemble the internal parts or modify them in any way.
- Do not expose the product to rain, use it near water or in damp or wet conditions, or place on it any containers (such as vases, bottles or glasses) containing liquids which might spill into any openings.
- Never charge when this product is wet. Doing so may cause electric shock, fire, or malfunction due to short circuiting.
- Do not place any burning items or open flames near the product, since they may cause a fire.
- Before installing, removing or charging this product, be sure to read and follow the description of the Owner's Manual for the device on which you are installing this product.
  Otherwise, fire, overheating, explosion or damage to the product or your device may result.
- Do not dispose of batteries in fire.
- Batteries shall not be exposed to excessive heat such as sunshine, fire or the like.
- If batteries do leak, avoid contact with the leaked fluid. If this product fluid should come in contact with your eyes, mouth, or skin, wash immediately with water and consult a doctor. Battery fluid is corrosive and may possibly cause loss of sight or chemical burns.
- Do not short-circuit the batteries. Failure to do so might result in a fire, burns, or inflammation due to fluid leaks.
- Do not put in a pocket or bag, carry, or store batteries together with pieces of metal. The battery could short, burst, or leak, causing a fire or injury.

- Do not keep this product in a place subject to extremely low air pressure.
  Otherwise, it may explode, resulting in fire or injury.
- Do not subject the batteries to mechanical shock or drop. Failure to comply may result in fire, electric shock, malfunction.
- Keep this product out of reach of children. This product is not suitable for use in locations where children are likely to be present.
- Replace Li-ion battery with (Yamaha Corporation, cat. no. BTR-STP200) only. Use of another battery may present a risk of fire or explosion.

Wireless unit

- Do not use this product near medical devices or inside medical facilities. Radio waves from this product may affect electro-medical devices.
- Do not use this product within 15 cm (6 in) of persons with a heart pacemaker implant or a defibrillator implant. Radio waves from this product may affect electro-medical devices, such as a heart pacemaker implant or defibrillator implant.

⚠ CAUTION

Always follow the basic precautions listed below to avoid the possibility of physical injury to you or others. These precautions include, but are not limited to, the following:

Power supply

- When removing the electric plug from the product or an outlet, always hold the plug itself and not the cord. Pulling by the cord can damage it.

Location and connection

- Do not place the product in an unstable position or a location with excessive vibration, where it might accidentally fall over and cause injury.
- Keep this product out of reach of children. This product is not suitable for use in locations where children are likely to be present.
- Do not block the vents. This product has ventilation holes at the top/rear to prevent the internal temperature from becoming too high. In particular, do not place the product on its side or upside down. Inadequate ventilation can result in overheating, possibly causing damage to the product(s), or even fire.
- To ensure proper heat dissipation of the product, when installing it:
  - Do not cover it with any cloth.
  - Make sure the top surface faces up; do not install on its sides or upside down.
  - Do not use the product in a confined, poorly-ventilated location.

  Inadequate ventilation can result in overheating, possibly causing damage to the product(s), or even fire. Make sure that there is adequate space around the product: at least 10 cm above, 10 cm at the sides and 10 cm behind.
- Do not carry or transport the device unless it is disassembled. Otherwise, you might be injured if the speaker or spacers strike your head or body.
- Do not place the product in a location where it may come into contact with corrosive gases or salt air. Doing so may result in malfunction.
- Before moving the product, remove all connected cables.
- Do not use the speaker's handles for suspended installation. Doing so can result in damage or injury.
- Do not hold the bottom of the product when transporting or moving it. In doing so, you may pinch your hands under the product, and result in injury.
- Do not press the rear panel of the product against the wall. Doing so may cause the plug and speaker cable to come in contact with the wall and detach from the power cord, resulting in short circuiting, malfunction, or even fire.

Maintenance

- Remove the power plug from the AC outlet when cleaning the product.

Handling caution

- Do not rest your weight on the product or place heavy objects on it.
- Do not operate the product if the sound is distorting. Prolonged use in this condition could cause overheating and result in fire.

Battery

- Never handle batteries with wet hands.
- Do not rest your weight on the product or place heavy objects on it.
- Always make sure all batteries are inserted in conformity. Failure to do so might result in overheating, fire, or battery fluid leakage.
- When storing or discarding batteries, insulate the terminal area by applying tape, or some other protection. If the terminal of the battery touches other batteries or metal objects, it may cause overheating, fire, or battery fluid leakage.
- Charge only with a specified charger. Charging with an unspecified charger may cause leakage, overheating, explosion, or malfunction.
- Charges within the specified charging temperature range. Charging at a temperature outside the range may cause leakage, overheating, explosion, or damage.

NOTICE

To avoid the possibility of malfunction/ damage to the product, damage to data, or damage to other property, follow the notices below.

■ Handling and maintenance

- Do not use the product in the vicinity of a TV, radio, or other electric products. Otherwise, the product, TV, or radio may generate noise.
- Do not expose the product to excessive dust or vibration, or extreme cold or heat, in order to prevent the possibility of panel disfiguration, unstable operation, or damage to the internal components.
- Do not install in locations where temperature changes are severe. Otherwise, condensation may form on the inside or the surface of the product, causing it to break.
- If there is reason to believe that condensation might have occurred, leave the product for several hours without turning on the power until the condensation has completely dried out, in order to prevent possible damage.
- This product is designed to be transported in the Yamaha CASE-STP 200 speaker carrying case. If you use other devices to carry this product, it may become unstable, causing it to malfunction.
- Do not use sodium hypochlorite solution, ethanol, benzine, thinner, detergent or a chemical rag to clean the surface of the product. Otherwise, the surface may become discolored or deteriorate.

■ Handling and maintenance for Battery

- This product is a lithium-ion battery. Charge this product before using it. Even if you plan not to use this product for a long period of time, recharge it every six months to maintain battery power. Otherwise, the product may become unable to retain a charge.
- If you plan not to use this product for a long period of time, remove the battery from the relevant device. Otherwise, the batteries may be drained, or battery liquid may leak, possibly resulting in damage to your device.
- Do not remove the batteries from its original packaging until required for use.
- Keep the batteries clean and dry.
- Wipe the battery terminals with a clean dry cloth if they become dirty.
- Do not leave the batteries on prolonged charge when not in use.
- If you plan not to use this product for a long period of time, remove the battery from the relevant device. Otherwise, the battery may be drained, or battery liquid may leak, possibly resulting in damage to your device.
- Do not install this product in a place subject to drastic changes in ambient temperature. Otherwise, condensation may form inside and on the surface of your device, resulting in damage to the device.
- If there is a reason to believe that condensation might have occurred on or in the device, leave it for a while, and then turn on the power to the device. Turning the power on while condensation is present may cause damage to the device.
- Charge the battery under an ambient temperature in the range of 0°C to 40°C.

Bluetooth®

The Bluetooth® word mark and logos are registered trademarks owned by Bluetooth SIG, Inc. and any use of such marks by Yamaha Corporation is under license.

The model number, serial number, power requirements, etc., may be found on or near the name plate, which is at the rear of the unit. You should note this serial number in the space provided below and retain this manual as a permanent record of your purchase to aid identification in the event of theft.

Model No.

Serial No.

(1003-M06 plate rear en 01)

Information

■ About functions/data bundled with the product

- Even when the [⏻] (Standby/On) switch is in standby status, electricity is still flowing to the product at the minimum level. When you are not using the product for a long time, make sure you unplug the power cord from the wall AC outlet.
- XLR-type connectors are wired as follows (IEC60268 standard): pin 1: ground, pin 2: hot (+), and pin 3: cold (-).

■ About this manual

- The illustrations and screens as shown in this manual are for instructional purposes only.
- The company names and product names in this manual are the trademarks or registered trademarks of their respective companies.
- Software may be revised and updated without prior notice.

■ About disposal

- This product contains recyclable components.
  When disposing of this product, please contact the appropriate local authorities.

WARNING

Do not dispose your old battery in the trash. Call 1-877-2-RECYCLE, to find a retail collection site nearest you to recycle your battery. You can also locate a collection site on the Rechargeable Battery Recycling Corporation (RBRC) website at;

http://www.call2recycle.org/

When this product has reached the end of its life, please remove and recycle the battery before you dispose of this product.
PLEASE NOTE: The above wording is only for; Nickel Cadmium (Ni-Cd), Nickel Metal Hydride (Ni-MH), Lithium Ion (Li-ion) and Small Sealed Lead (Pb) batteries.

Yamaha cannot be held responsible for damage caused by improper use or modifications to the product, or data that is lost or destroyed.

■ Notice regarding repair requests

- Before requesting a repair of the unit, make sure that the battery operates properly. If the battery operates properly, remove the battery from the unit, then request a repair.
- If the battery malfunctions, do not send the battery to your Yamaha dealer. Instead, please purchase an optional battery (BTR-STP200). If the warranty has not expired, consult your Yamaha dealer.

* Refer to the "Charging the battery" section on page 15 for information on how to check the battery condition.

Controls and Functions

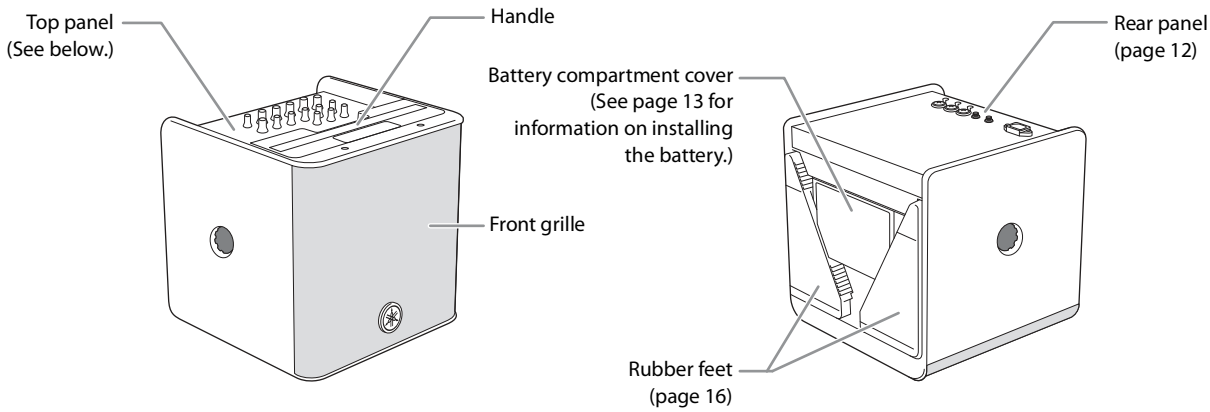

NOTICE
Do not block the vents located on the top, rear and bottom panels when the unit is in use.

Top panel

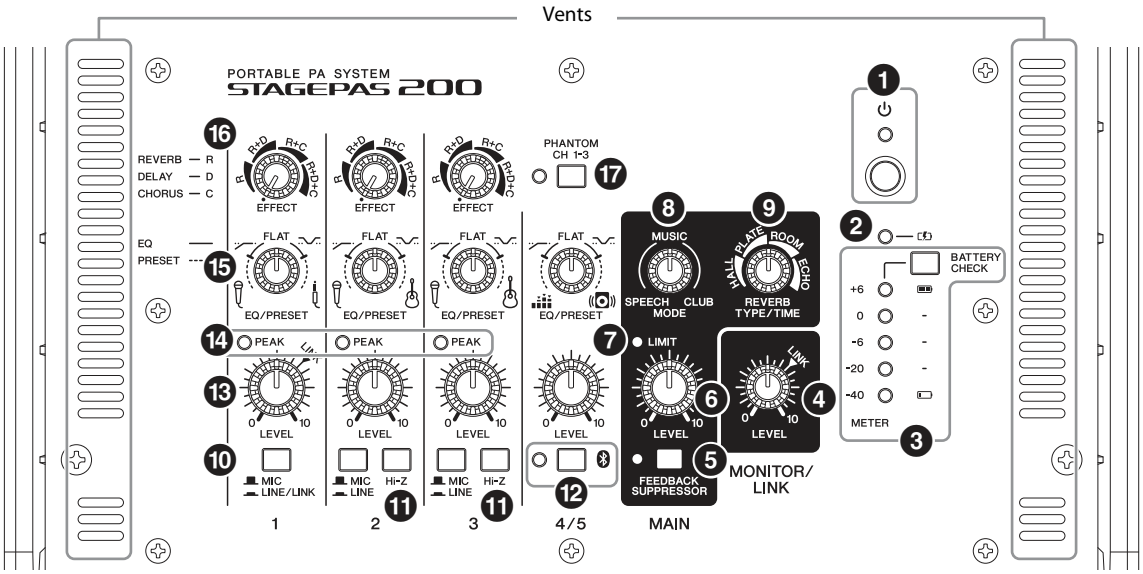

❶ [⏻] (Standby/On) switch, [⏻] (Standby/On) indicator

The indicator lights green when this switch is turned on. If the protection circuit is activated, the indicator will flash rapidly and the speaker output will be muted.

If the protection circuit is activated, do one of the following:
Turn off the power to the unit and then turn it on again.
Disconnect the power cord from the AC outlet or from the unit, and then connect it again.
Wait until the temperature of the unit drops.

If the protection circuit is not deactivated, please contact your Yamaha dealer.

NOTICE

- **Even when the power switch is turned off, a minimal amount of electric current is still flowing to the unit. If you plan not to use the unit for an extended period of time, be sure to unplug the power cord from the AC outlet.**
- **Rapidly powering the unit on and off in succession may cause it to malfunction. After turning the power off, wait for about five seconds before turning it on again.**
- **When you turn on the power to all connected devices, be sure to first turn on the power to the external sound source, then to this product, and finally to the device that is connected to the OUTPUT [MONITOR/LINK] jack. When you turn off the power to all devices, follow this order in reverse.**
- **If the unit is battery-powered and has not been used for more than 30 minutes, the power to the unit will be automatically turned off. One minute before the power to the unit is turned off, the [⏻] (Standby/On) indicator will flash.**

❷ [ ] (Charge) indicator

Lights yellow while the battery is being charged.
The indicator will flash rapidly if battery abnormality occurs.
On the other hand, the indicator will flash slowly if the battery charge is getting low or the battery temperature is outside the operating temperature range.

❸ [METER] indicators, [BATTERY CHECK] switch

The [METER] indicators indicate the speaker output. They also indicate the amount of remaining battery charge if you press and hold down the [BATTERY CHECK] switch. How to read the amount of remaining charge (See page 15.)

❹ MONITOR/LINK [LEVEL] control

Determines the signal level output from the OUTPUT [MONITOR/LINK] jack.
If multiple units of this product are connected, you can set this control to the LINK position to easily balance the volume level between multiple units.

❺ MAIN [FEEDBACK SUPPRESSOR] switch and indicator

Press this switch to apply the feedback suppressor. The indicator lights yellow.

❻ MAIN [LEVEL] control

Adjusts the speaker volume.

❼ MAIN [LIMIT] indicator

Lights up if the speaker volume becomes excessive, causing the limiter to activate.

NOTE
If this indicator lights up frequently, turn the MAIN [LEVEL] control to lower the speaker volume.

❽ MAIN [MODE] control

Use this control to adjust the overall sound pressure and frequency balance. The center position (**MUSIC**) is a basic setting.

- If you turn the control counterclockwise (toward **SPEECH**), it will cut unneeded low-range frequencies, and create an optimum setting for speech, or singing and playing an acoustic musical instrument.
- If you turn the control clockwise (toward **CLUB**), it will boost the high and low ranges, and create an optimum setting for playback of sound sources.

❾ MAIN [REVERB TYPE/TIME] control

Determines reverb type and length. Each "◢" mark labeled around the control refers to the length of corresponding reverb.

- **HALL:** Simulated reverb of a large space, such as a concert hall.
- **PLATE:** Simulated steel plate reverb, producing a harder-edged and brighter sound.
- **ROOM:** Simulated acoustic ambiance of a small room.
- **ECHO:** Echo effect suitable for karaoke.

❿ [MIC, LINE/LINK] switch (channel 1), [MIC, LINE] switches (channels 2 & 3)

For low-level signals (including microphones), set the switches to the MIC ( ) position. For high-level signals (including electronic musical instruments and audio devices), set the switches to the LINE/LINK or LINE ( ) position.

⓫ [Hi-Z] switches (channels 2 & 3)

You can use these switches when connecting a musical instrument with passive pickups (without a battery), such as an acoustic-electric guitar or electric bass. Turn on the switches when you connect these instruments directly to the mixer without using a DI (direct box).

This function is effective only for the signals input via the phone jacks.

⓬ [ ] (Bluetooth) switch and indicator (channel 4/5)

This switch turns the Bluetooth audio connection on or off. It is used to pair (register) a Bluetooth device (page 20). The indicator shows the following status:

[ ] (Bluetooth) indicator	Status
Off	Bluetooth standby mode
Lit steadily	Bluetooth connected
Flashing slowly	Searching for a Bluetooth device
Flashing rapidly	Waiting for Bluetooth pairing
Flashing twice	Authorizing STAGEPAS Controller

NOTE
This product enables you to pair (register) up to eight Bluetooth devices. Once the ninth Bluetooth device has been paired successfully, the pairing information for the Bluetooth device that was connected earliest will be deleted.

⓭ [LEVEL] controls (channels 1–3, channel 4/5)

Use these controls to adjust the volume for the corresponding channels. To reduce noise, set the [LEVEL] controls on unused channels to minimum (zero).
Channel 1 [LEVEL] control is also useful when you adjust the input level in the LINK connection. If multiple units of this product are connected, you can use this control, along with the MONITOR/LINK [LEVEL] control (❹), and set it to the LINK position to easily balance the volume level between multiple units.

⓮ [PEAK] indicators (channels 1–3)

Light red if signals are almost clipping due to excessive input levels. If these indicators light up, lower the level of the corresponding input channel signals, or set the corresponding [MIC, LINE/LINK] switches or [MIC, LINE] switch to the LINE/ LINK or LINE position.

⓯ [EQ] controls (channels 1-3, channel 4/5)

From the center (**FLAT**) position, turn these controls counter-clockwise to cut the low range. Turn them clockwise to boost both low and high ranges.

[PRESET] controls

Turn them in either direction beyond the EQ setting area (labeled by solid lines) to select a preset setting. The Comp and Mic Simulator functions are available.
Channel 1 is suitable for connecting a microphone or a keyboard.
Channels 2 and 3 are suitable for connecting a microphone or a guitar.
Channel 4/5 is suitable for connecting a music player or a keyboard.

⓰ [EFFECT] controls (channels 1–3)

Determine the effect type and send amount.
Select the effect type from the following options (reverb, or a combination of reverb and delay and/or chorus).

- **R:** Reverb
- **R+D:** Reverb + Delay
- **R+C:** Reverb + Chorus
- **R+D+C:** Reverb + Delay + Chorus

Each "◢" mark labeled around the controls refers to the Send amount. As you turn the controls clockwise within each effect type range, the Send amount will increase.

⓱ [PHANTOM CH1-3] switch

Press this switch to supply phantom power only to the XLR connectors of the INPUT [1/LINK], [2], and [3] jacks.

NOTICE

If you do not need to use phantom power, turn this switch off.
Before turning phantom power on, follow the precautions below to avoid malfunction or noise of this product or external devices.

- **Turn this switch off if you are planning to connect a device that does not support phantom power to the XLR connector of the INPUT [1/LINK], [2], or [3] jack. Alternatively, connect such a device using a phone plug cable.**
- **While this switch is on, do not connect or disconnect a cable from the INPUT [1/LINK], [2], or [3] jack.**
- **Before turning the phantom switch on or off, be sure to set the [LEVEL] controls to the minimum level.**

Rear panel

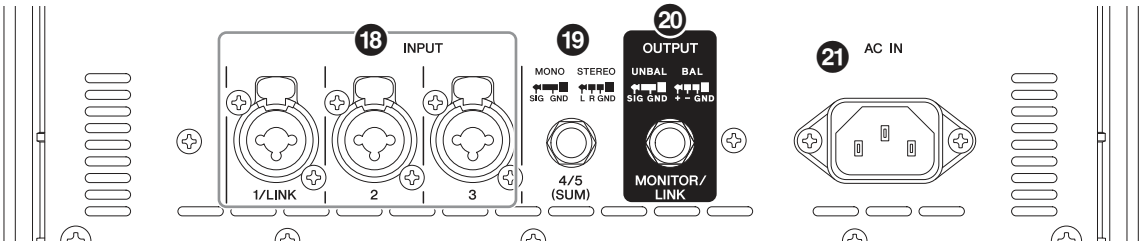

⑱ INPUT [1/LINK], [2], [3] jacks

These are Mic/Line input jacks for channels 1-3. These are combo jacks that support both XLR and phone plugs. Connect microphones, guitars, electronic musical instruments or audio equipment.
If you connect two units of this product to each other (for monaural expansion), use the [1/LINK] jack as an input jack for the second unit. We also recommend that you use this jack if you plan to input a line-level signal from an external mixing console.
The [2] and [3] phone jacks support Hi-Z input. Use these jacks to input a low-level signal, such as a microphone or an acoustic-electric guitar.

⑲ INPUT [4/5 (SUM)] jack

This line input jack supports a phone-type plug. Connect a line-level device such as an electronic musical instrument, CD player, or portable audio player. A stereo input signal will be internally mixed into a monaural signal.
A signal from the Bluetooth device is always mixed and input to channel 4/5.

⑳ OUTPUT [MONITOR/LINK] jack

This monaural output jack supports a phone-type plug. A mixed signal is output from this jack to a connected device, such as a powered speaker. Use the MONITOR/LINK [LEVEL] control to adjust the output level.
This jack is useful when you are recording live performance to a recorder, or distributing live streaming audio.
If you connect two units of this product to each other (for monaural expansion), use this jack as an output jack for the first unit.

NOTE

If the feedback suppressor is enabled, this jack will output the affected signal.

㉑ [AC IN] jack

Connect the included power cord here. First, connect the power cord to this jack, and then insert the power plug into an AC outlet.
Be sure to turn off the power switch before connecting or disconnecting the power cord (STAGEPAS 200 only).

WARNING

- **This product has been designed for grounded use. To avoid electrical shock and damage to connected devices, be sure to ground the unit using the included power cord. If you have any questions regarding proper connections, please contact your nearest Yamaha dealer.**
- **Use only the included power cord. Otherwise, heat may be generated or an electrical shock may be caused.**

Installing and Removing the Battery

Installing one BTR-STP200 rechargeable lithium ion battery pack enables you to use this product (STAGEPAS 200 or STAGEPAS 200BTR) without connecting a power cord.

NOTICE

- **To avoid over-discharge, this battery, as shipped from the factory, will not function when you first install it in the intended product. To enable the battery function for first time use, you must install it in the product and then connect the product to an AC outlet using the dedicated power cord.**
- **If you remove the battery from the unit, and then quickly re-install the same battery, a malfunction may occur. After removing the battery, be sure to wait at least six seconds before re-installing the same battery in the unit.**

Installing the battery

1 Disconnect the power cord from the AC outlet or from the unit.

NOTICE

Installing or removing the battery while the power cord is connected to the unit might cause the battery to malfunction.

2 Place the unit upside down with the top panel facing down, and then remove the rubber feet.

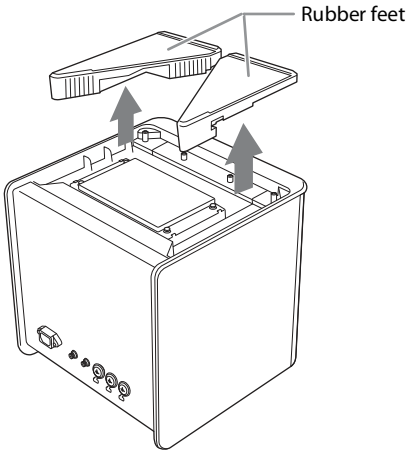

3 Use a Phillips screwdriver to loosen the four screws, and then remove the battery compartment cover from the unit.

Tool required for installation: Phillips screwdriver

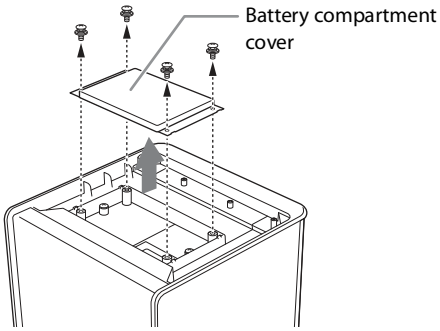

4 Loosen and remove the two screws that will be used to affix the battery later in this procedure.

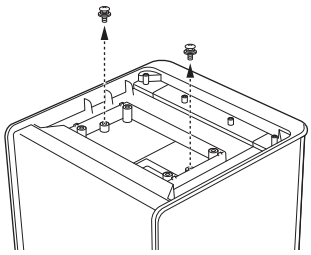

5 Insert the battery into the battery compartment so that the connector on the battery will align with the connector slot in the compartment, and then affix the battery securely using the two screws.

NOTE

Tightening torque for the screws should be 1.2 Nm.

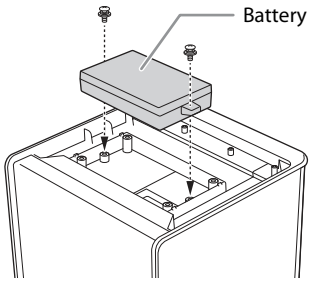

6 Replace the battery compartment cover and affix it securely with the four screws.

NOTE

Tightening torque for the screws should be 1.2 Nm.

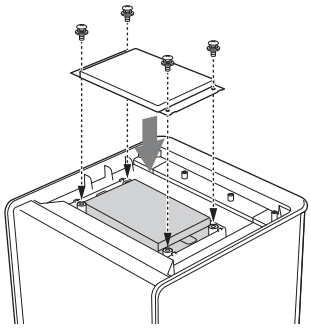

7 Attach the rubber feet on the bottom panel, and then flip the unit back so that the bottom of the unit faces down.

8 Connect the power cord to the unit, and then insert the power plug into an AC outlet.

The battery starts to charge.

Removing the battery

1 Disconnect the power cord from the AC outlet or from the unit.

NOTICE

Installing or removing the battery while the power cord is connected to the unit might cause the battery to malfunction.

2 Place the unit upside down with the top panel facing down, and then remove the rubber feet.

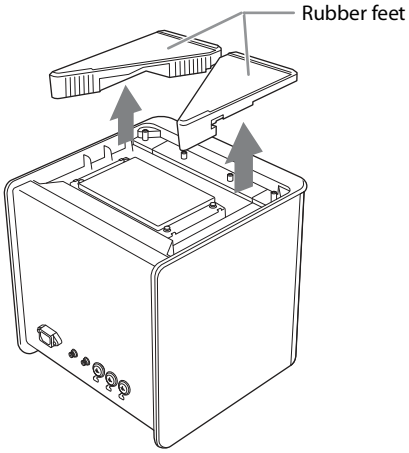

3 Use a Phillips screwdriver to loosen the four screws, and then remove the battery compartment cover from the unit.

Tool required for installation: Phillips screwdriver

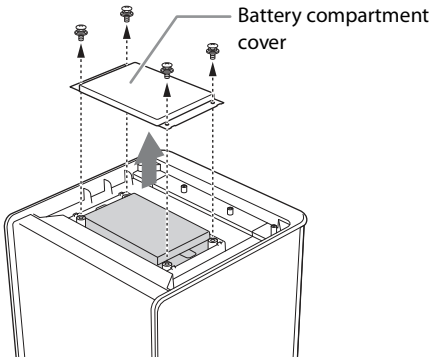

4 Remove the two screws that affix the battery, and then remove the battery.

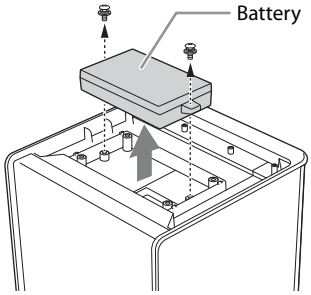

5 Replace and tighten the two screws tightly that were just removed.

NOTE

Tightening torque for the screws should be 1.2 Nm.

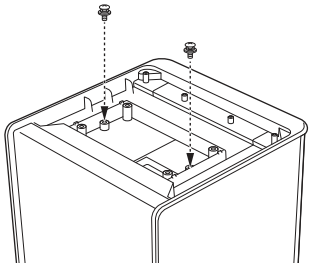

6 Replace the battery compartment cover and affix it securely with the four screws.

NOTE

Tightening torque for the screws should be 1.2 Nm.

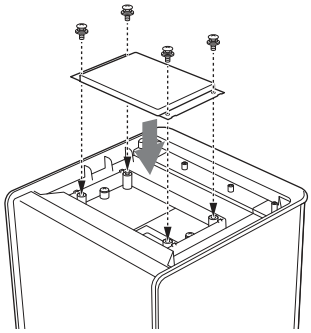

7 Attach the rubber feet on the bottom panel, and then flip the unit back so that the bottom of the unit faces down.

Charging the Battery

1 Install the battery in this product (page 13).

2 Connect the power cord to the unit and an AC outlet to charge the battery.

■ Reasons why the battery cannot be charged

The battery temperature might be high. Place the battery in a cool, dark place and wait until the temperature drops. Also, the battery might not be charged if it has deteriorated.

List of battery-related indicators

■ While the unit is operating on AC power (connected to an AC outlet)

[ ] (Charge) indicator	Status
Off	No charge
Lit steadily	Charging
Flashing rapidly	Battery abnormality

■ While the unit is operating on the battery power

[ ] (Charge) indicator	Status
Flashing slowly	Remaining charge is down to less than 20%. The battery operating temperature is outside the recommended range.
Flashing rapidly	Battery abnormality

The METER indicators show the amount of remaining battery charge if you press and hold down the [BATTERY CHECK] switch.

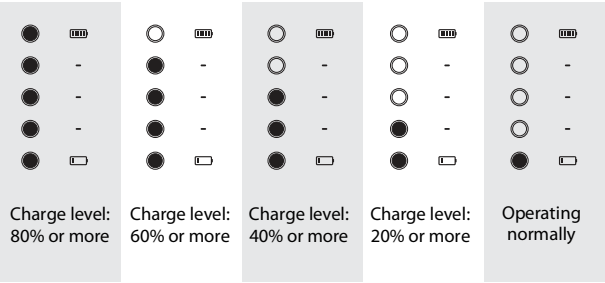

○ : Off
● : Lit steadily

■ While the power switch is turned off

Under one of the following situations, the [ ] (Charge) indicator will stay lit steadily.

- The maximum battery capacity has decreased to less than 75%.
- The battery is not usable.

Installing the Unit

Installing the unit horizontally on the floor

Place the unit on a horizontal floor surface with the rubber feet still attached to the bottom panel.

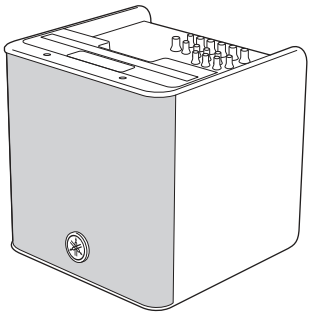

NOTICE

If you place the unit without the rubber feet attached on the bottom, the floor may be scratched.

Using the rubber feet to tilt the unit

You can use the rubber feet to tilt the unit so that the grille is slanted by 30° or 60°.
Be sure to follow the steps below to attach two rubber feet to the unit.

■ Slanted upward by 30°

1 Remove both rubber feet from the bottom panel.

2 Attach the rubber feet to the unit as shown in the illustration below.

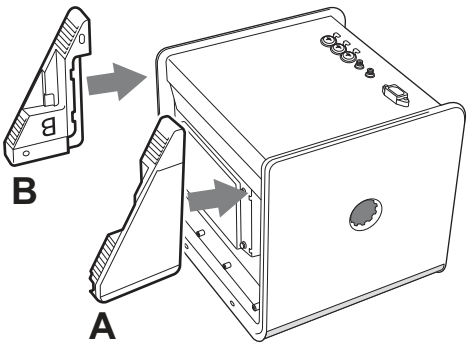

3 Make sure that the groove of each rubber foot will bite the side frame of the unit.

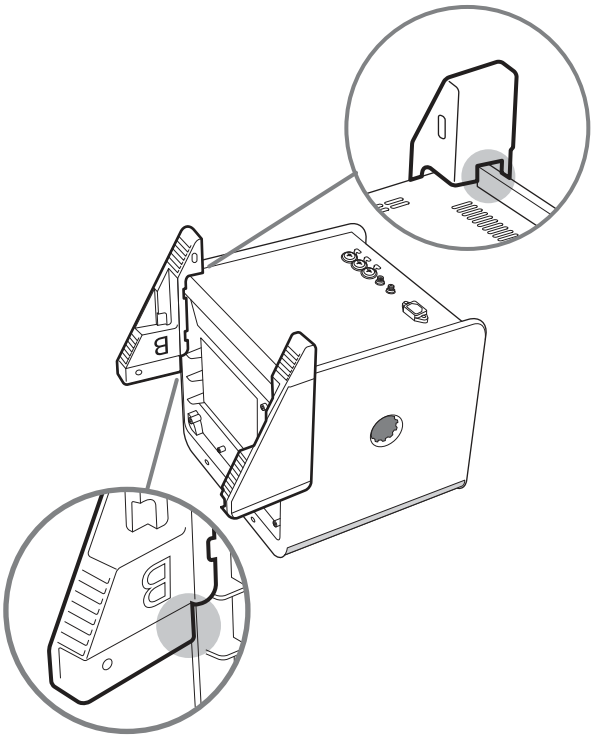

4 Place the unit with the rubber feet on the bottom.

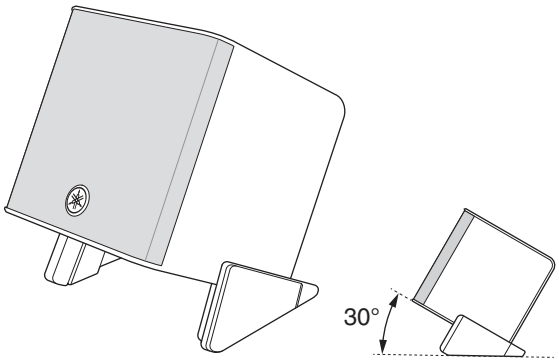

■ Slanted upward by 60°

1 **Remove both rubber feet from the bottom panel.**

2 **Attach the rubber feet to the unit as shown in the illustration below.**

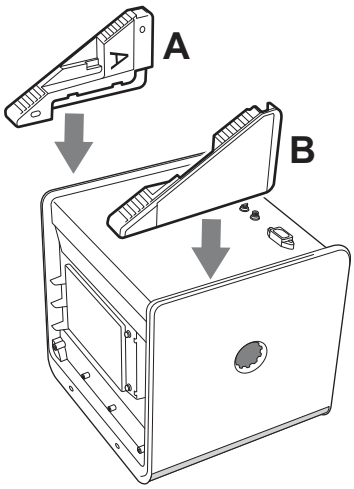

3 **Make sure that the groove of each rubber foot will bite the side frame of the unit.**

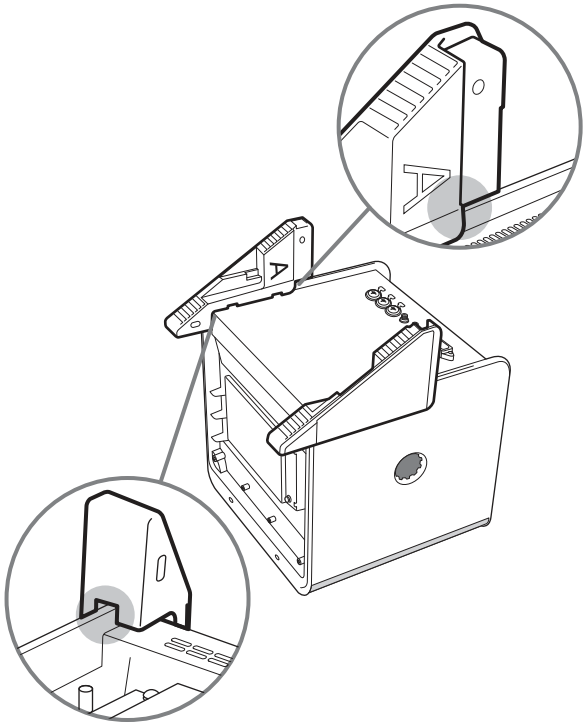

4 **Place the unit with the rubber feet on the bottom.**

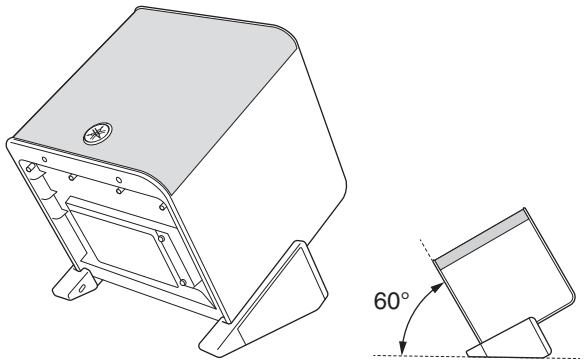

Connecting microphones, musical instruments, or audio devices to the built-in mixer

■ Connection example

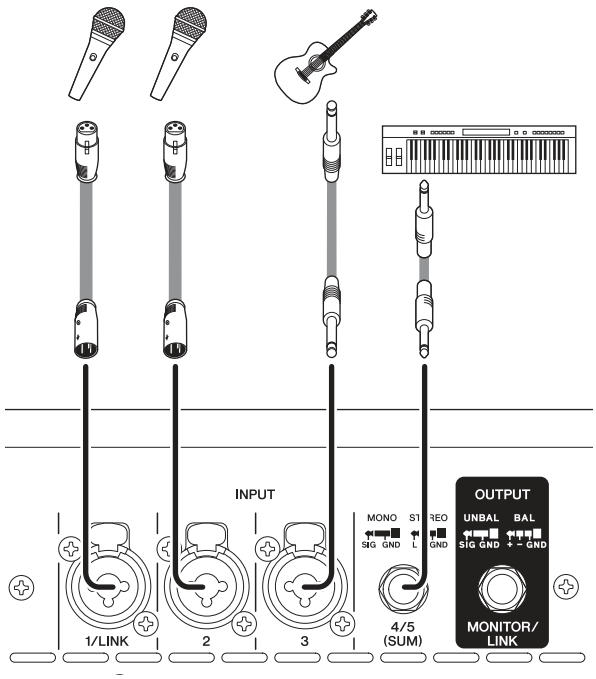

Refer to the illustration to connect desired devices, such as a microphone, or a musical instrument to the input jacks of the mixer.

Getting sound

1 Connect the plug on the included power cord to the [AC IN] jack on the rear panel of this unit.

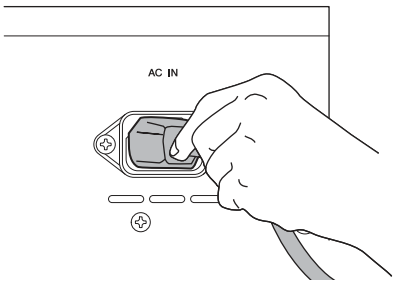

2 Insert the other end of the power cord into an AC outlet.

WARNING

To avoid electrical shock and damage to connected devices, be sure to ground the unit using the included power cord.

3 Turn the MAIN [LEVEL] control (red knob) and channel [LEVEL] controls (white knobs) to the minimum (zero).

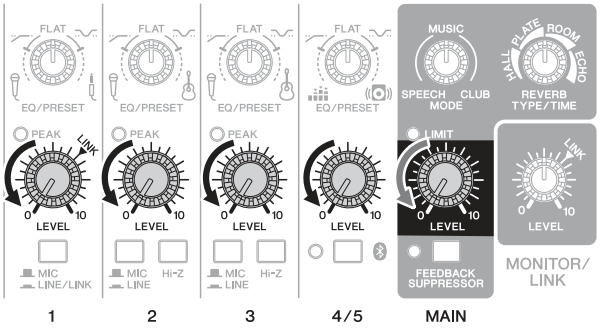

4 Also, set the channel [EQ/PRESET] controls (green knobs) to the center (FLAT) position, and set the MAIN [MODE] control (yellow knob) to the MUSIC position.

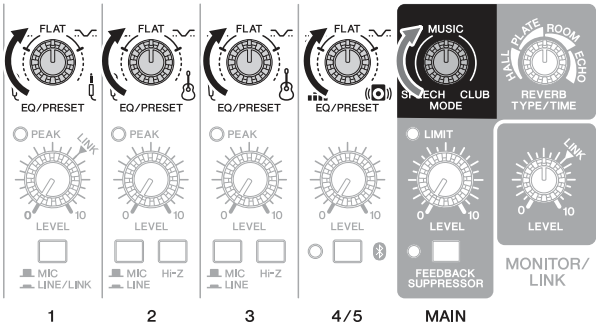

5 Set the [MIC, LINE/LINK] switch or [MIC, LINE] switch to the MIC (▙) position for channels to which a microphone is connected. Set those switches to the LINE/LINK or LINE (▬) position for channels to which a musical instrument or audio device is connected.

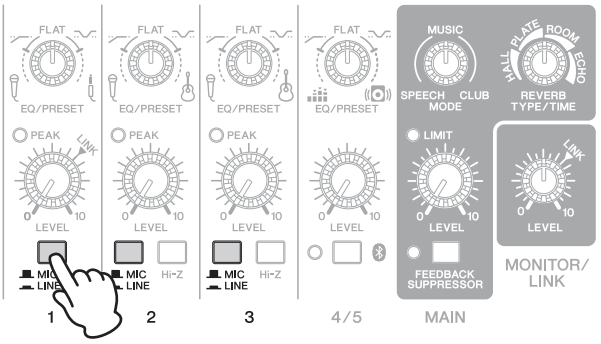

6 Turn on the power to the connected musical instrument or audio device, then to this unit by pressing and holding down the [⏻] (Standby/On) switch for one second or longer.

The [⏻] indicator lights up.

7 Use the MAIN [LEVEL] control to raise the volume level to a temporarily appropriate level.

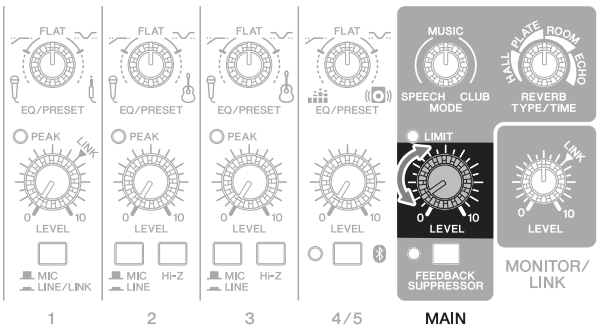

8 While playing your musical instrument or singing into the microphone, use the [LEVEL] controls to adjust the volume of the corresponding channels.

9 Use the MAIN [LEVEL] control to adjust the overall volume level.

If you can hear sound and the volume seems appropriate, setup is complete. If not, please refer to the checklist in the Troubleshooting section (page 23).

NOTICE

When you turn off the power to all devices, first turn off the power to this unit, and then turn off the connected sound sources (such as a musical instrument or audio device) to avoid any loud, unexpected noises from the speaker.

NOTE

- If the sound is too loud, turn the [LEVEL] control for the corresponding channel to the minimum (zero). Then, set the [MIC, LINE/ LINK] switch to the LINE/LINK position, or the [MIC, LINE] switch to the LINE (▬) position, and then slowly raise the [LEVEL] control until the desired volume is reached.
- If the sound is too soft, turn the [LEVEL] control for the corresponding channel to the minimum (zero). Then, set the [MIC, LINE/LINK] switch or the [MIC/LINE] switch to the MIC (■) position, and then slowly raise the [LEVEL] control until the desired volume is reached.

Connecting Multiple Units of This Product

You can expand the output by connecting two or more units of this product to each other.

1 If you use two units for example, connect the [LINK] output jack of the first unit to the [1/ LINK] input jack of the second unit.

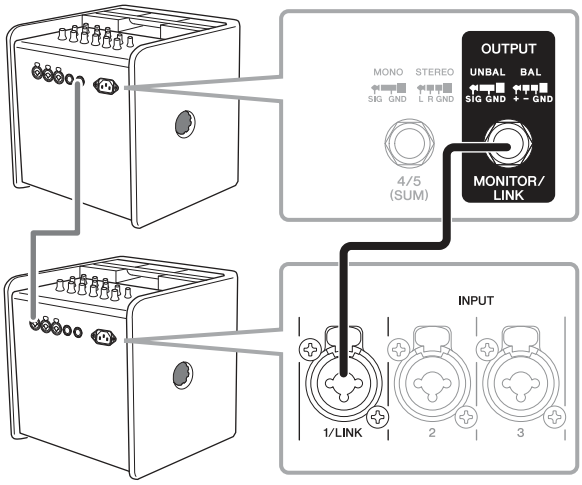

2 Connect microphones, musical instruments or audio equipment to the first unit to input signals.

3 Set the MONITOR/LINK [LEVEL] control on each unit to the LINK position.
On each unit except the first, set the [MIC, LINE/LINK] switch for channel 1 to the LINE/LINK position, and set the [LEVEL] control for channel 1 to the LINK position.

4 Use the MAIN [LEVEL] control on each unit to adjust each speaker volume level.

Use the input channels on the first unit.

NOTE

You can use STAGEPAS Controller to control the volume level of all connected devices simultaneously. For more information, please refer to the Owner's Manual for STAGEPAS Controller.

Playing Bluetooth® Audio

You can set up the STAGEPAS 200BTR/200 so it will play audio files stored in Bluetooth devices, such as a mobile device.

Registering (pairing) a Bluetooth® device

Before you can connect a Bluetooth device for the first time, you need to "pair" the device. "Pairing" refers to registering one Bluetooth device with another Bluetooth device.
Once pairing is complete, you will be able to reconnect those devices easily after you terminate a Bluetooth connection.

1 Make sure that the [ ] (Bluetooth) indicator is turned off. If it is lit steadily or is flashing, press the [ ] (Bluetooth) switch to set the Bluetooth function to standby mode.

2 Press and hold down the [ ] (Bluetooth) switch for three seconds or longer.

The [ ] (Bluetooth) indicator will flash rapidly, indicating that the unit is ready for pairing.

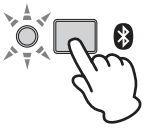

3 Turn on the Bluetooth function on the Bluetooth device that you want to connect.

For more information, refer to the owner's manual for the Bluetooth device.

4 Once the Bluetooth device displays a list of other Bluetooth devices that are available for connection, select STAGEPAS 200 AUDIO.

NOTE

You can change the name of the unit in the Device Name setting of STAGEPAS Controller.

When the pairing process is complete, the Bluetooth connection is established and the [ ] (Bluetooth) indicator lights up.

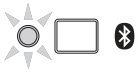

NOTE

- The STAGEPAS 200BTR/200 enables you to pair (register) up to eight Bluetooth devices. However, only one such device can establish the connection. Once the ninth Bluetooth device has been paired successfully, the pairing information for the Bluetooth device that was connected earliest will be deleted.
- You must complete the pairing process on the Bluetooth device within two minutes.

Connecting a Bluetooth® device

■ Connecting from the STAGEPAS 200BTR/200

1 Press and hold down the [ ] (Bluetooth) switch for one second.

The [ ] (Bluetooth) indicator flashes slowly, and the unit starts searching for a registered Bluetooth device.

2 Turn on the Bluetooth function on the Bluetooth device that you want to connect.

When the connection is made automatically, the [ ] (Bluetooth) indicator lights up.

■ Connecting from a Bluetooth device

Even if Bluetooth on the unit is in standby mode, you can still use your Bluetooth device to connect it by following the procedure below.

1 Turn on the Bluetooth function on the Bluetooth device that you want to connect.

2 Select STAGEPAS 200 AUDIO from the list of Bluetooth devices displayed on your Bluetooth device.

Playing audio files stored on a Bluetooth® device

You can use the STAGEPAS 200BTR/200 to listen to an audio file playing on your Bluetooth device.
Signals from the Bluetooth device are input to channel 4/5.
We recommend that you set the volume on the Bluetooth device a little higher than normal, and then adjust the volume for channel 4/5 using the channel [LEVEL] control.

If you receive a call or text message while playing audio files on your Bluetooth device such as a smartphone, audio file playback might be paused momentarily.
To avoid this interruption, enable Airplane Mode, and then set Bluetooth to ON on your Bluetooth device.

Disconnecting the Bluetooth® device

To disconnect the Bluetooth device, do one of the following:

- Use the Bluetooth device to disconnect. (The [ ] (Bluetooth) indicator on the unit turns off).
- Press the [ ] (Bluetooth) switch on the unit to engage Bluetooth standby mode. (The [ ] (Bluetooth) indicator turns off.)

NOTICE

Before you turn off the power to the unit, make sure that the Bluetooth function is turned off. (The [ ] (Bluetooth) indicator should be off.) If you turn off the power to the unit while the Bluetooth function remains enabled, the unit might lose the pairing information.

Controlling the Unit from STAGEPAS Controller

You can control the parameters and view the meters and clipping information of this product from your Bluetooth-enabled device, such as a smartphone or tablet.
For more information on how to use STAGEPAS Controller, please refer to the "STAGEPAS Controller User Guide."

Connecting STAGEPAS Controller

To control the unit in this way, you first need to connect a device on which STAGEPAS Controller has been installed. Alternatively, you can control the unit from a device that is different than the one connected for Bluetooth Audio.

1 Start STAGEPAS Controller.

2 When the DEVICE LIST screen appears, tap the name of the STAGEPAS that you want to control.

The name of the target STAGEPAS will be highlighted.

NOTE
If you do not see the desired device on the list, press the refresh button to search for the device again.

3 Tap "Connect."

Press the Bluetooth button on this product only if this is the first time you connect it to STAGEPAS Controller. You also need to set up the initial password. (This process is required for connection.)

NOTE
When you reconnect your Bluetooth device, you do not need to follow steps 2 and 3 above.

Disconnecting STAGEPAS Controller

1 Display the DEVICE LIST screen on STAGEPAS Controller.

The name of the target STAGEPAS will be highlighted.

2 Tap "Disconnect."

The mixer parameters will maintain the values specified via STAGEPAS Controller.

Maintaining the STAGEPAS Controller settings

1 To maintain the values specified via STAGEPAS Controller, set LAST MEMORY RESUME to ON.

ON: If the power to the unit is turned off and then back on, the unit will maintain the previous settings. However, the parameter values will not match the position of the controllers on the panel.
OFF: If the power to the unit is turned off and then back on, the settings will be initialized. The parameter values will match the position of the controllers on the panel.

Initializing the Settings for This Product

If you want to revert the settings for this product to the factory default settings, such as resetting the parameters that were programmed from STAGEPAS Controller, or resetting the Bluetooth pairing (registering) information, follow the steps below:

1 Turn the [⏻] (Standby/On) switch off.

2 While pressing and holding down the [ ] (Bluetooth) switch and the MAIN [FEEDBACK SUPPRESSOR] switch simultaneously, turn the [⏻] (Standby/On) switch on.

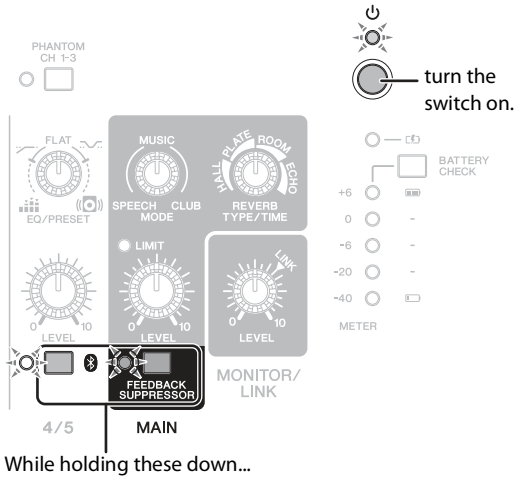

During the initialization process, the [⏻] (Standby/On) indicator, MAIN [FEEDBACK SUPPRESSOR] indicator, and [ ] (Bluetooth) indicator will flash.
Make sure that they are flashing, and then release your fingers from the switches.

3 When the initialization is complete, the unit automatically restarts.

EFFECT	Knob position
EQ/PRESET	Knob position
MODE	Knob position
MAIN LEVEL	Knob position
FEEDBACK SUPPRESSOR ON	Default (OFF)
Bluetooth audio pairing (registration) information	All cleared
CHANNEL LEVEL *1	Default (0 dB)
LR-MONO SELECT *1	Default (LR-MONO)
MAIN EQ *1	Default (FLAT)
MONITOR/LINK MODE	Default (MONITOR MODE)
EFFECT ON *1	Default (ON)
REVERB LEVEL *1	Default (–3 dB)
CHORUS LEVEL *1	Default (–3 dB)
DELAY LEVEL *1	Default (–3 dB)
REVERB TYPE/TIME	Knob position
CHORUS *1	Default
DELAY *1	Default
DUCKER *1	Default
DEVICE NAME *1	Default (STAGEPAS200)
SCENE *1	Values for SCENE #1–8 are cleared.
PASSWORD *1	Disabled
AUTO STANDBY *1	Enabled
LAST MEMORY RESUME *1	Default (OFF)

*1 Parameters that can be controlled only from STAGEPAS Controller

Storing the Unit

If you plan not to use the STAGEPAS 200BTR or STAGEPAS 200 for a long period of time, remove the battery from the unit and store the unit and battery separately.

Troubleshooting

Symptoms	Possible causes	Action to take
Power does not turn on.	You did not firmly and securely connect the power cord.	Connect the power cord firmly and securely.
	If the unit is running on the battery, the battery charge level is not sufficient.	Plug in this product to an AC outlet with the power cord to charge the battery.
Power shuts down suddenly.	The vents on the unit are blocked. Since inadequate ventilation can result in overheating inside this product, the power may be turned off automatically to protect the system from overheating.	Arrange the ventilation for better cooling, then turn the power on again.
	The unit will engage standby mode if the Auto Standby function is enabled and no audio has been input for at least 30 minutes.	Press the [⏻] (Standby/On) switch.
No sound is heard.	If the [⏻] (Standby/On) indicator is flashing rapidly, it indicates that the internal power amplifier is overloaded, and the amplifier is muted to protect its circuits.	Leave the unit in a cool place for a while. The amplifier will automatically reset itself.
Sound is distorted. Noise is produced.	The [LEVEL] controls of any relevant channels and/or the MAIN [LEVEL] control are set too high.	Turn the relevant [LEVEL] control to the minimum (zero), then set the switch to the LINE/ LINK or LINE position, and then slowly raise the [LEVEL] control.
	The [MIC, LINE/LINK] switch or [MIC, LINE] switch is set to the MIC position. If the input level from the source is high, setting the relevant switch to the MIC position may result in a distorted sound.	Set the switch to the LINE/LINK or LINE position.
	The volume level of the external device connected to the mixer is too high.	Lower the volume level of the external device.
Sound is not loud enough.	The [LEVEL] controls of any relevant channels and/or the MAIN [LEVEL] control are set too low.	Turn the relevant [LEVEL] control to the minimum (zero), then set the switch to the MIC position, and then slowly raise the [LEVEL] control.
	The [MIC, LINE/LINK] switch or [MIC, LINE] switch is set to the LINE position.	Set the switch to the MIC position.
	The volume level of the external device connected to the mixer is too low.	Raise the volume level of the external device.
	Some settings can be controlled only from STAGEPAS Controller.	Use STAGEPAS Controller to adjust the settings, or initialize the unit.
The high-range sounds and low-range sounds are unbalanced.	You turned the [EQ/PRESET] control clockwise or counter-clockwise too much.	Set the [EQ/PRESET] control to the center (FLAT) position.
Cannot connect Bluetooth.	If the [ ] (Bluetooth) indicator is lit, it means that the unit is connected to a different Bluetooth device.	Cut the current Bluetooth connection, and then connect to the desired Bluetooth device.
	Pairing failed. In particular, the initialization process will wipe off the pairing information.	Pair the device again.
Bluetooth audio sound cuts intermittently.	The unit may be located in the vicinity of a device that emits electro-magnetic waves at a frequency of 2.4 GHz (such as a wireless microphone transmitter, wireless LAN device, microwave oven, etc.).	Locate the unit away from any device that emits electro-magnetic waves.
	The wireless LAN function on the Bluetooth device is enabled.	Turn off the wireless LAN function, and enable only the Bluetooth function.
The [ ] (Charge) indicator is flashing rapidly.	Battery has abnormality.	Stop using the unit immediately, remove the battery from the unit, and then contact your Yamaha dealer.

If a problem persists, please contact your Yamaha dealer.

General Specifications

■ Main specifications

System Type	2-way, bi-amplified powered speaker + mixer
Frequency Range (–10dB)	60 Hz – 20 kHz
Coverage Angle (Horizontal × Vertical)	90° × 90°
Crossover	2.0 kHz, 24 dB/Oct slope
Measured Maximum SPL (Peak) **IEC noise@1m**	125 dB SPL
Power Requirements	100 V – 240 V, 50/60 Hz or 29.6 Vdc when using battery
Power Consumption	10 W (idle), 20 W (1/8 power)
Dimensions (W × H × D)	300 × 307.5 × 301 mm
Weight	12.0 kg (main unit only)

■ Speaker Section

Speaker unit Type	Coaxial speaker + compression driver
LF	8" cone, 2.0" voice coil
HF	1" throat compression driver, 1.4" voice coil
Speaker Magnet	Ferrite (LF, HF)
Body Material, Color	ABS (black)
Floor Monitor Angle	30° or 60°
Grille	Matte Black Powder Coated Perforated Steel Grille
Handle	Top panel × 1

■ Mixer and Amplifier Sections

Mixing Channels		5
Analog Inputs		Mono Mic/Line × 3, Stereo Line × 1
Bluetooth Audio		A2DP (SBC, AAC), Ver 5.0, Class 1
	Content Protection Method	SCMS-T
	Transmission Frequencies	2,402 – 2,480 MHz
	Maximum Wireless Output Power (EIRP)	15 dBm (32 mW)
Power Amplifier		Class-D
Power Rating*1	**Dynamic**	180 W (LF: 150 W, HF: 30 W)
	Continuous	100 W (LF: 90 W, HF: 10 W)
Cooling Method		Natural convection (no cooling fan)
AD/DA		24 bit 48 kHz Sampling

* 0 dBu = 0.775 Vrms
*1 Power rating (120 V, 25°C). This is total value of individual output power. This value is measured by releasing the software protection.
Dynamic: Total peak power of individual outputs. Measured at minimum load impedance, with protection released.
Continuous: Measured at nominal impedance, with protection activated.

■ Battery (STAGEPAS 200BTR only)

Model Number	BTR-STP200
Battery Type	Rechargeable lithium ion battery pack
Weight	530 g (39 lbs)
Dimensions	186 × 96 × 39 mm
Capacity	79.92 Wh (2700 mAh, 29.6 V)
Operating Time	Maximum 10 hours, 1/16 power continuous 8 hours
Charging Time	Approx. 4 hours
Operating Temperature	0 – 40°C
Charging Temperature	5 – 40°C

* If this product is stored for twelve months under temperatures between –20°C and 25°C, the battery charge capacity will be reduced by about 10%.
* Battery charging time is an estimate for fully charging a completely exhausted battery. The time varies depending on the remaining battery level and ambient temperature.

■ Accessories

Included in the package	Power cord × 1, Owner's Manual Rechargeable lithium ion battery pack × 1 BTR-STP200 (STAGEPAS 200BTR only)
Optional items	Rechargeable lithium ion battery pack BTR-STP200 Dedicated carrying case CASE-STP200

Input Characteristics

Input Terminals	Connector Type		Hi-Z SW	MIC/LINE SW	Input Impedance	Source Impedance	Input Level	
							Sensitivity*1	Max. before Clip
CH 1/LINK	XLR Combo	XLR/ Phone	–	MIC	3 kΩ (Balance)	150 Ω Mics/Lines	–38 dBu	–4 dBu
				LINE			–12 dBu	+22 dBu
CH 2–3	XLR Combo	XLR/ Phone	OFF	MIC	3 kΩ (Balance)	150 Ω Mics/Lines	–38 dBu	–4 dBu
				LINE			–12 dBu	+22 dBu
		Phone	ON	MIC	1 MΩ (Unbalance)	10 kΩ Lines	–38 dBu	–4 dBu
				LINE			–12 dBu	+22 dBu
CH 4/5	Stereo Phone (TRS)		–	–	10 kΩ (Unbalance)	150 Ω Lines	–9 dBu	+22 dBu

0 dBu=0.775 Vrms
*1. CH VOLUME=MAX

Output Characteristics

Output Terminals	Connector Type	Output Impedance	Load Impedance	Output Level	
				Link Output (Max)*2	Monitor Output (Max. before Clip)
MONITOR/LINK	Phone (TRS)	75 Ω	3 kΩ	+7 dBu	+20 dBu

0 dBu=0.775 Vrms
*2. MONITOR/LINK LEVEL: LINK ▼ position

The contents of this manual apply to the latest specifications as of the publishing date. To obtain the latest manual, access the Yamaha website then download the manual file.

Dimensions

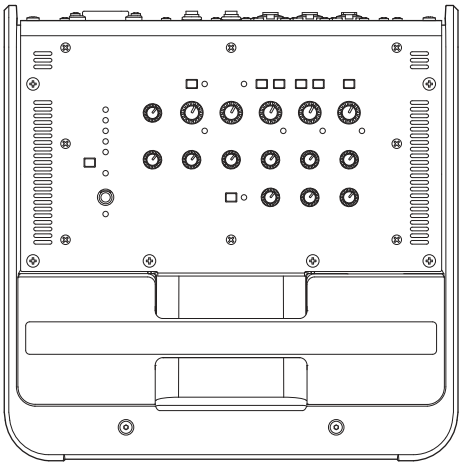

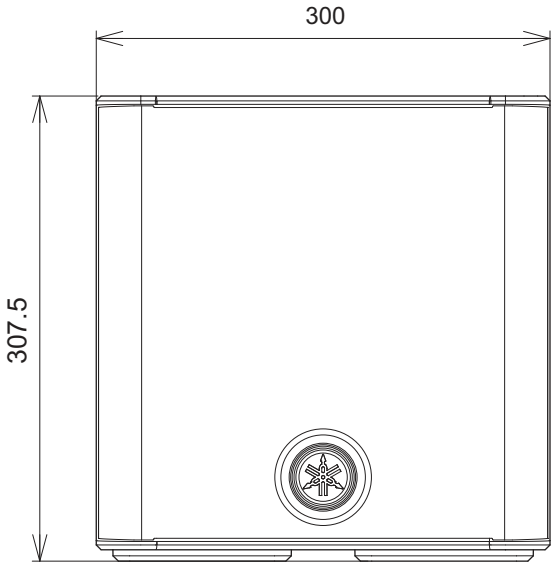

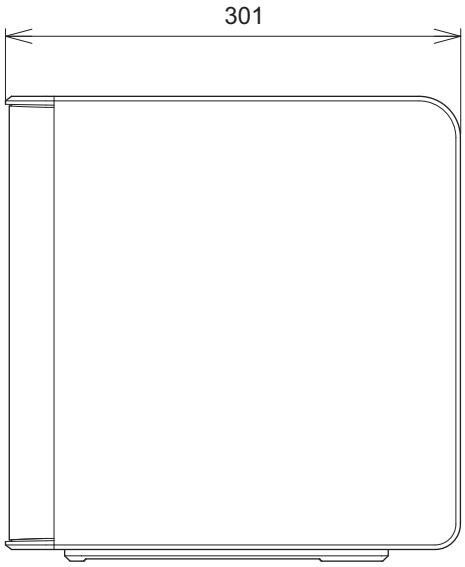

Unit: mm

Block Diagram

Each function surrounded by a rectangle ( ) can be controlled from the panel on this product. Other functions can be operated and monitored only from the application software.

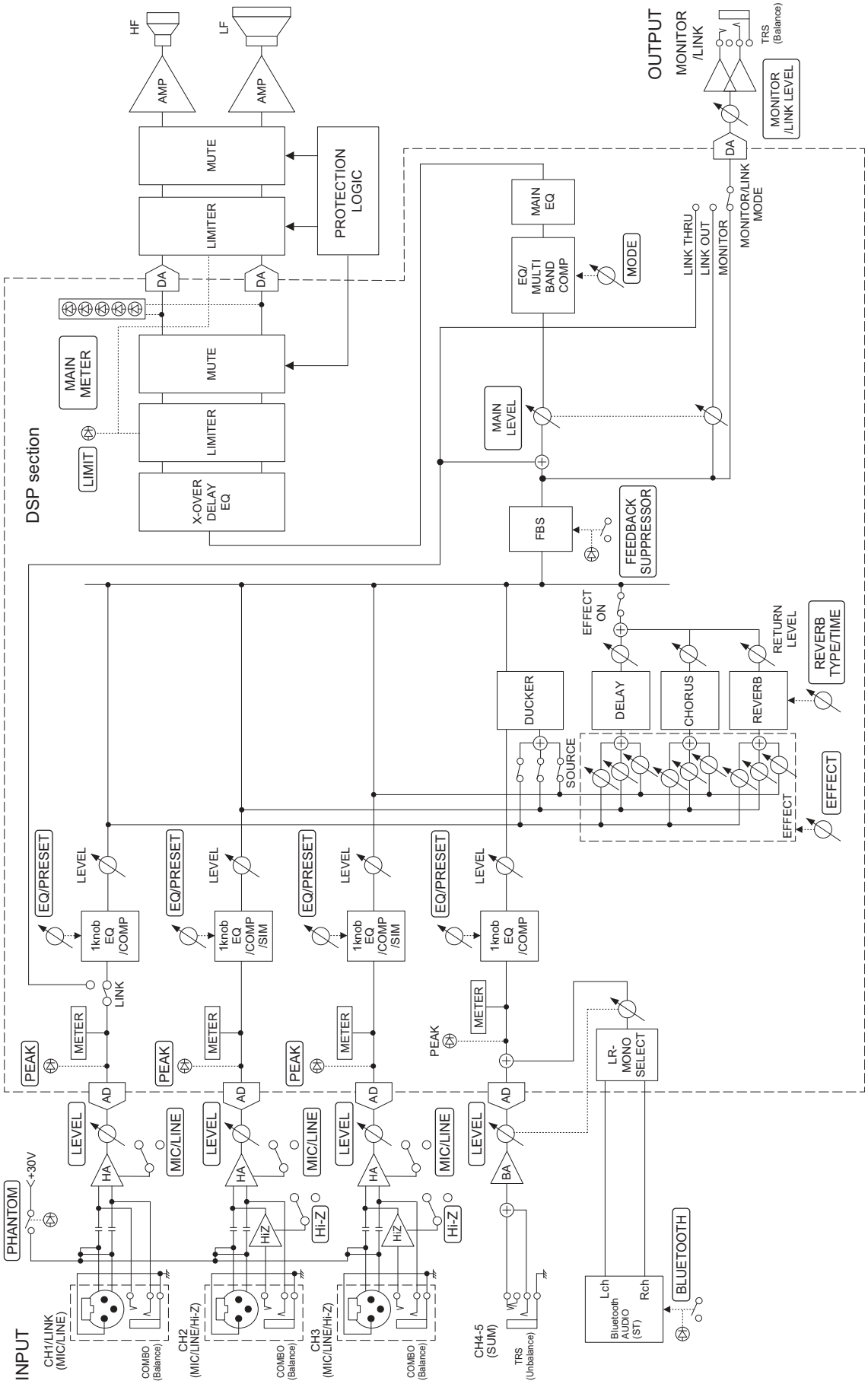

■ Notice regarding the software license

Software used in this product includes software that complies with the license agreement by Analog Devices, Inc.
This license is a type of software license that authorizes redistribution of the software program under and subject to clear indication that no guarantee is provided, and publication of the copyright declaration and the license terms.
The following paragraphs are published subject to the said license terms, and do not stipulate any restriction with regard to your usage of this product.

Copyright © 2019 Analog Devices, Inc. All rights reserved.

Redistribution and use in source and binary forms, with or without modification, are permitted provided that the following conditions are met:

- Redistributions of source code must retain the above copyright notice, this list of conditions and the following disclaimer.
- Redistributions in binary form must reproduce the above copyright notice, this list of conditions and the following disclaimer in the documentation and/or other materials provided with the distribution.
- Modified versions of the software must be conspicuously marked as such.
- This software is licensed solely and exclusively for use with processors/products manufactured by or for Analog Devices, Inc.
- This software may not be combined or merged with other code in any manner that would cause the software to become subject to terms and conditions which differ from those listed here.
- Neither the name of Analog Devices, Inc. nor the names of its contributors may be used to endorse or promote products derived from this software without specific prior written permission.
- The use of this software may or may not infringe the patent rights of one or more patent holders. This license does not release you from the requirement that you obtain separate licenses from these patent holders to use this software.

THIS SOFTWARE IS PROVIDED BY ANALOG DEVICES, INC. AND CONTRIBUTORS “AS IS” AND ANY EXPRESS OR IMPLIED WARRANTIES, INCLUDING, BUT NOT LIMITED TO, NON-INFRINGEMENT, TITLE, MERCHANTABILITY AND FITNESS FOR A PARTICULAR PURPOSE ARE DISCLAIMED. IN NO EVENT SHALL ANALOG DEVICES, INC. OR CONTRIBUTORS BE LIABLE FOR ANY DIRECT, INDIRECT, INCIDENTAL, SPECIAL, EXEMPLARY, PUNITIVE OR CONSEQUENTIAL DAMAGES (INCLUDING, BUT NOT LIMITED TO, DAMAGES ARISING OUT OF CLAIMS OF INTELLECTUAL PROPERTY RIGHTS INFRINGEMENT; PROCUREMENT OF SUBSTITUTE GOODS OR SERVICES; LOSS OF USE, DATA, OR PROFITS; OR BUSINESS INTERRUPTION) HOWEVER CAUSED AND ON ANY THEORY OF LIABILITY, WHETHER IN CONTRACT, STRICT LIABILITY, OR TORT (INCLUDING NEGLIGENCE OR OTHERWISE) ARISING IN ANY WAY OUT OF THE USE OF THIS SOFTWARE, EVEN IF ADVISED OF THE POSSIBILITY OF SUCH DAMAGE.

2019-01-10-7CBSD SLA

This transmitter must not be co-located or operated in conjunction with any other antenna or transmitter.

(554-M01 FCC transmitter 01)

This equipment complies with FCC radiation exposure limits set forth for an uncontrolled environment and meets the FCC radio frequency (RF) Exposure Guidelines. This equipment should be installed and operated keeping the radiator at least 20 cm or more away from person's body.

(554-M03 FCC mobile SAR 01)

This equipment complies with ISED radiation exposure limits set forth for an uncontrolled environment and meets RSS-102 of the ISED radio frequency (RF) Exposure rules. This equipment should be installed and operated keeping the radiator at least 20 cm or more away from person's body.

(555-M04 ISED mobile SAR en 01)

Cet équipement est conforme aux limites d'exposition aux rayonnements énoncées pour un environnement non contrôlé et respecte les règles d'exposition aux fréquences radioélectriques (RF) CNR-102 de l'ISDE. Cet équipement doit être installé et utilisé en gardant une distance de 20 cm ou plus entre le radiateur et le corps humain.

(555-M04 ISED mobile SAR fr 01)

This device contains licence-exempt transmitter(s)/receiver(s) that comply with Innovation, Science and Economic Development Canada's licence-exempt RSS(s). Operation is subject to the following two conditions:
1. This device may not cause interference.
2. This device must accept any interference, including interference that may cause undesired operation of the device.

(555-M13 ISED RSS en 01)

L'émetteur/récepteur exempt de licence contenu dans le présent appareil est conforme aux CNR d'Innovation, Sciences et Développement économique Canada applicables aux appareils radio exempts de licence. L'exploitation est autorisée aux deux conditions suivantes :
1. L'appareil ne doit pas produire de brouillage;
2. L'appareil doit accepter tout brouillage radioélectrique subi, même si le brouillage est susceptible d'en compromettre le fonctionnement.

(555-M13 ISED RSS fr 01)

La operación de este equipo está sujeta a las siguientes dos condiciones: (1) es posible que este equipo o dispositivo no cause interferencia perjudicial y (2) este equipo o dispositivo debe aceptar cualquier interferencia, incluyendo la que pueda causar su operación no deseada.

(556-M02 MX operating condition 01)

EN

SIMPLIFIED EU DECLARATION OF CONFORMITY / SIMPLIFIED UK DECLARATION OF CONFORMITY

Hereby, Yamaha Music Europe GmbH declares that the radio equipment type [STAGEPAS 200BTR, STAGEPAS 200] is in compliance with Directive 2014/53/EU and the radio equipment regulations of UK. The full texts of the EU declaration of conformity and the UK declaration of conformity are available at the following internet address:
https://europe.yamaha.com/en/support/compliance/doc.html

FR

DECLARATION UE DE CONFORMITE SIMPLIFIEE

Le soussigné, Yamaha Music Europe GmbH, déclare que l'équipement radioélectrique du type [STAGEPAS 200BTR, STAGEPAS 200] est conforme à la directive 2014/53/UE. Le texte complet de la déclaration UE de conformité est disponible à l'adresse internet suivante:
https://europe.yamaha.com/en/support/compliance/doc.html

DE

VEREINFACHTE EU-KONFORMITÄTSERKLÄRUNG

Hiermit erklärt Yamaha Music Europe GmbH, dass der Funkanlagentyp [STAGEPAS 200BTR, STAGEPAS 200] der Richtlinie 2014/53/EU entspricht. Der vollständige Text der EU-Konformitätserklärung ist unter der folgenden Internetadresse verfügbar:
https://europe.yamaha.com/en/support/compliance/doc.html

SV

FÖRENKLAD EU-FÖRSÄKRAN OM ÖVERENSSTÄMMELSE

Härmed försäkrar Yamaha Music Europe GmbH att denna typ av radioutrustning [STAGEPAS 200BTR, STAGEPAS 200] överensstämmer med direktiv 2014/53/EU. Den fullständiga texten till EU-försäkran om överensstämmelse finns på följande webbadress:
https://europe.yamaha.com/en/support/compliance/doc.html

IT

DICHIARAZIONE DI CONFORMITÀ UE SEMPLIFICATA

Il fabbricante, Yamaha Music Europe GmbH, dichiara che il tipo di apparecchiatura radio [STAGEPAS 200BTR, STAGEPAS 200] è conforme alla direttiva 2014/53/UE. Il testo completo della dichiarazione di conformità UE è disponibile al seguente indirizzo Internet:
https://europe.yamaha.com/en/support/compliance/doc.html

ES

DECLARACIÓN UE DE CONFORMIDAD SIMPLIFICADA

Por la presente, Yamaha Music Europe GmbH declara que el tipo de equipo radioeléctrico [STAGEPAS 200BTR, STAGEPAS 200] es conforme con la Directiva 2014/53/UE. El texto completo de la declaración UE de conformidad está disponible en la dirección Internet siguiente:
https://europe.yamaha.com/en/support/compliance/doc.html

PT

DECLARAÇÃO UE DE CONFORMIDADE SIMPLIFICADA

O(a) abaixo assinado(a) Yamaha Music Europe GmbH declara que o presente tipo de equipamento de rádio [STAGEPAS 200BTR, STAGEPAS 200] está em conformidade com a Diretiva 2014/53/UE. O texto integral da declaração de conformidade está disponível no seguinte endereço de Internet:
https://europe.yamaha.com/en/support/compliance/doc.html

NL

VEREENVOUDIGDE EU-CONFORMITEITSVERKLARING

Hierbij verklaar ik, Yamaha Music Europe GmbH, dat het type radioapparatuur [STAGEPAS 200BTR, STAGEPAS 200] conform is met Richtlijn 2014/53/EU. De volledige tekst van de EU-conformiteitsverklaring kan worden geraadpleegd op het volgende internetadres:
https://europe.yamaha.com/en/support/compliance/doc.html

BG

ОПРОСТЕНА ЕС ДЕКЛАРАЦИЯ ЗА СЪОТВЕТСТВИЕ

С настоящото Yamaha Music Europe GmbH декларира, че този тип радиосъоръжение [STAGEPAS 200BTR, STAGEPAS 200] е в съответствие с Директива 2014/53/ЕС. Цялостният текст на ЕС декларацията за съответствие може да се намери на следния интернет адрес:
https://europe.yamaha.com/en/support/compliance/doc.html

CS

ZJEDNODUŠENÉ EU PROHLÁŠENÍ O SHODĚ

Tímto Yamaha Music Europe GmbH prohlašuje, že typ rádiového zařízení [STAGEPAS 200BTR, STAGEPAS 200] je v souladu se směrnicí 2014/53/EU. Úplné znění EU prohlášení o shodě je k dispozici na této internetové adrese:
https://europe.yamaha.com/en/support/compliance/doc.html

DA

FORENKLET EU-OVERENSSTEMMELSESERKLÆRING

Hermed erklærer Yamaha Music Europe GmbH, at radioudstyrstypen [STAGEPAS 200BTR, STAGEPAS 200] er i overensstemmelse med direktiv 2014/53/EU. EU-overensstemmelseserklæringens fulde tekst kan findes på følgende internetadresse:
https://europe.yamaha.com/en/support/compliance/doc.html

ET

LIHTSUSTATUD ELI VASTAVUSDEKLARATSIOON

Käesolevaga deklareerib Yamaha Music Europe GmbH, et käesolev raadioseadme tüüp [STAGEPAS 200BTR, STAGEPAS 200] vastab direktiivi 2014/53/EL nõuetele. ELi vastavusdeklaratsiooni täielik tekst on kättesaadav järgmisel internetiaadressil:
https://europe.yamaha.com/en/support/compliance/doc.html

EL

ΑΠΛΟΥΣΤΕΥΜΕΝΗ ΔΗΛΩΣΗ ΣΥΜΜΟΡΦΩΣΗΣ ΕΕ

Με την παρούσα ο/η Yamaha Music Europe GmbH, δηλώνει ότι ο ραδιοεξοπλισμός [STAGEPAS 200BTR, STAGEPAS 200] πληροί την οδηγία 2014/53/ΕΕ. Το πλήρες κείμενο της δήλωσης συμμόρφωσης ΕΕ διατίθεται στην ακόλουθη ιστοσελίδα στο διαδίκτυο:
https://europe.yamaha.com/en/support/compliance/doc.html

HR

POJEDNOSTAVLJENA EU IZJAVA O SUKLADNOSTI

Yamaha Music Europe GmbH ovime izjavljuje da je radijska oprema tipa [STAGEPAS 200BTR, STAGEPAS 200] u skladu s Direktivom 2014/53/EU. Cjeloviti tekst EU izjave o sukladnosti dostupan je na sljedećoj internetskoj adresi:
https://europe.yamaha.com/en/support/compliance/doc.html

LV

VIENKĀRŠOTA ES ATBILSTĪBAS DEKLARĀCIJA

Ar šo Yamaha Music Europe GmbH deklarē, ka radioiekārta [STAGEPAS 200BTR, STAGEPAS 200] atbilst Direktīvai 2014/53/ES. Pilns ES atbilstības deklarācijas teksts ir pieejams šādā interneta vietnē:
https://europe.yamaha.com/en/support/compliance/doc.html

LT

SUPAPRASTINTA ES ATITIKTIES DEKLARACIJA

Aš, Yamaha Music Europe GmbH, patvirtinu, kad radijo įrenginių tipas [STAGEPAS 200BTR, STAGEPAS 200] atitinka Direktyvą 2014/53/ES. Visas ES atitikties deklaracijos tekstas prieinamas šiuo interneto adresu:
https://europe.yamaha.com/en/support/compliance/doc.html

HU

EGYSZERŰSÍTETT EU-MEGFELELŐSÉGI NYILATKOZAT

Yamaha Music Europe GmbH igazolja, hogy a [STAGEPAS 200BTR, STAGEPAS 200] típusú rádióberendezés megfelel a 2014/53/EU irányelvnek. Az EU-megfelelőségi nyilatkozat teljes szövege elérhető a következő internetes címen:
https://europe.yamaha.com/en/support/compliance/doc.html

PL

UPROSZCZONA DEKLARACJA ZGODNOŚCI UE

Yamaha Music Europe GmbH niniejszym oświadcza, że typ urządzenia radiowego [STAGEPAS 200BTR, STAGEPAS 200] jest zgodny z dyrektywą 2014/53/UE. Pełny tekst deklaracji zgodności UE jest dostępny pod następującym adresem internetowym:
https://europe.yamaha.com/en/support/compliance/doc.html

RO

DECLARAȚIA UE DE CONFORMITATE SIMPLIFICATĂ

Prin prezenta, Yamaha Music Europe GmbH declară că tipul de echipamente radio [STAGEPAS 200BTR, STAGEPAS 200] este în conformitate cu Directiva 2014/53/UE. Textul integral al declarației UE de conformitate este disponibil la următoarea adresă internet:
https://europe.yamaha.com/en/support/compliance/doc.html

SK

ZJEDNODUŠENÉ EÚ VYHLÁSENIE O ZHODE

Yamaha Music Europe GmbH týmto vyhlasuje, že rádiové zariadenie typu [STAGEPAS 200BTR, STAGEPAS 200] je v súlade so smernicou 2014/53/EÚ. Úplné EÚ vyhlásenie o zhode je k dispozícii na tejto internetovej adrese:
https://europe.yamaha.com/en/support/compliance/doc.html

SL

POENOSTAVLJENA IZJAVA EU O SKLADNOSTI

Yamaha Music Europe GmbH potrjuje, da je tip radijske opreme [STAGEPAS 200BTR, STAGEPAS 200] skladen z Direktivo 2014/53/EU. Celotno besedilo izjave EU o skladnosti je na voljo na naslednjem spletnem naslovu:
https://europe.yamaha.com/en/support/compliance/doc.html

FI

YKSINKERTAISTETTU EU-VAATIMUSTENMUKAISUUSVAKUUTUS

Yamaha Music Europe GmbH vakuuttaa, että radiolaitetyyppi [STAGEPAS 200BTR, STAGEPAS 200] on direktiivin 2014/53/EU mukainen. EU-vaatimustenmukaisuusvakuutuksen täysimittainen teksti on saatavilla seuraavassa internetosoitteessa:
https://europe.yamaha.com/en/support/compliance/doc.html

TR

BASİTLEŞTİRİLMİŞ AVRUPA BİRLİĞİ UYGUNLUK BİLDİRİMİ

İşbu belge ile, Yamaha Music Europe GmbH, radyo cihaz tipinin [STAGEPAS 200BTR, STAGEPAS 200], Direktif 2014/53/AB'ye uygunluğunu beyan eder. AB uyumu beyanının tam metni aşağıdaki internet adresinden edinilebilir:
https://europe.yamaha.com/en/support/compliance/doc.html

(559-M01 RED DoC URL 02)

Information for users on collection and disposal of old equipment and used batteries:

These symbols on the products, packaging, and/or accompanying documents mean that used electrical and electronic products and batteries should not be mixed with general household waste.
For proper treatment, recovery and recycling of old products and used batteries, please take them to applicable collection points, in accordance with your national legislation.

By disposing of these products and batteries correctly, you will help to save valuable resources and prevent any potential negative effects on human health and the environment which could otherwise arise from inappropriate waste handling.

For more information about collection and recycling of old products and batteries, please contact your local municipality, your waste disposal service or the point of sale where you purchased the items.

For business users in the European Union:
If you wish to discard electrical and electronic equipment, please contact your dealer or supplier for further information.

Information on Disposal in other Countries outside the European Union:
These symbols are only valid in the European Union. If you wish to discard these items, please contact your local authorities or dealer and ask for the correct method of disposal.

Cd

Note for the battery symbol (bottom symbol example):
This symbol might be used in combination with a chemical symbol. In this case it complies with the requirement set by the EU Battery Directive for the chemical involved.

(58-M03 WEEE battery en 01)

Verbraucherinformation zur Sammlung und Entsorgung alter Elektrogeräte und benutzter Batterien

Befinden sich diese Symbole auf den Produkten, der Verpackung und/oder beiliegenden Unterlagen, so sollten benutzte elektrische Geräte und Batterien nicht mit dem normalen Haushaltsabfall entsorgt werden.
In Übereinstimmung mit Ihren nationalen Bestimmungen bringen Sie alte Geräte und benutzte Batterien bitte zur fachgerechten Entsorgung, Wiederaufbereitung und Wiederverwendung zu den entsprechenden Sammelstellen.

Durch die fachgerechte Entsorgung der Elektrogeräte und Batterien helfen Sie, wertvolle Ressourcen zu schützen, und verhindern mögliche negative Auswirkungen auf die menschliche Gesundheit und die Umwelt, die andernfalls durch unsachgerechte Müllentsorgung auftreten könnten.

Für weitere Informationen zum Sammeln und Wiederaufbereiten alter Elektrogeräte und Batterien kontaktieren Sie bitte Ihre örtliche Stadt- oder Gemeindeverwaltung, Ihren Abfallentsorgungsdienst oder die Verkaufsstelle der Artikel.

Information für geschäftliche Anwender in der Europäischen Union:
Wenn Sie Elektrogeräte ausrangieren möchten, kontaktieren Sie bitte Ihren Händler oder Zulieferer für weitere Informationen.

Entsorgungsinformation für Länder außerhalb der Europäischen Union:
Diese Symbole gelten nur innerhalb der Europäischen Union. Wenn Sie solche Artikel ausrangieren möchten, kontaktieren Sie bitte Ihre örtlichen Behörden oder Ihren Händler und fragen Sie nach der sachgerechten Entsorgungsmethode.

Cd

Anmerkung zum Batteriesymbol (untere zwei Symbolbeispiele):
Dieses Symbol kann auch in Kombination mit einem chemischen Symbol verwendet werden. In diesem Fall entspricht dies den Anforderungen der EU-Batterierichtlinie zur Verwendung chemischer Stoffe.

(58-M03 WEEE battery de 01)

Informations concernant la collecte et le traitement des piles usagées et des déchets d'équipements électriques et électroniques

Les symboles sur les produits, l'emballage et/ou les documents joints signifient que les produits électriques ou électroniques usagés ainsi que les piles usagées ne doivent pas être mélangés avec les déchets domestiques habituels.
Pour un traitement, une récupération et un recyclage appropriés des déchets d'équipements électriques et électroniques et des piles usagées, veuillez les déposer aux points de collecte prévus à cet effet, conformément à la réglementation nationale.

En vous débarrassant correctement des déchets d'équipements électriques et électroniques et des piles usagées, vous contribuerez à la sauvegarde de précieuses ressources et à la prévention de potentiels effets négatifs sur la santé humaine qui pourraient advenir lors d'un traitement inapproprié des déchets.

Pour plus d'informations à propos de la collecte et du recyclage des déchets d'équipements électriques et électroniques et des piles usagées, veuillez contacter votre municipalité, votre service de traitement des déchets ou le point de vente où vous avez acheté les produits.

Pour les professionnels dans l'Union européenne :
Si vous souhaitez vous débarrasser des déchets d'équipements électriques et électroniques, veuillez contacter votre vendeur ou fournisseur pour plus d'informations.

Informations sur la mise au rebut dans d'autres pays en dehors de l'Union européenne :
Ces symboles sont seulement valables dans l'Union européenne. Si vous souhaitez vous débarrasser de déchets d'équipements électriques et électroniques ou de piles usagées, veuillez contacter les autorités locales ou votre fournisseur et demander la méthode de traitement appropriée.

Cd

Note pour le symbole « pile » (deux exemples de symbole ci-dessous) :
Ce symbole peut être utilisé en combinaison avec un symbole chimique. Dans ce cas, il respecte les exigences établies par la directive européenne relative aux piles pour le produit chimique en question.

(58-M03 WEEE battery fr 01)

Información para usuarios sobre la recogida y eliminación de los equipos antiguos y las pilas usadas

Estos símbolos en los productos, embalajes y documentos anexos significan que los productos eléctricos y electrónicos y sus pilas no deben mezclarse con los desperdicios domésticos normales.
Para el tratamiento, recuperación y reciclaje apropiados de los productos antiguos y las pilas usadas, llévelos a puntos de reciclaje correspondientes, de acuerdo con la legislación nacional.

Al deshacerse de estos productos y pilas de forma correcta, ayudará a ahorrar recursos valiosos y a impedir los posibles efectos desfavorables en la salud humana y en el entorno que de otro modo se producirían si se trataran los desperdicios de modo inapropiado.

Para obtener más información acerca de la recogida y el reciclaje de los productos antiguos y las pilas, póngase en contacto con las autoridades locales, con el servicio de eliminación de basuras o con el punto de venta donde adquirió los artículos.

Para los usuarios empresariales de la Unión Europea:
Si desea desechar equipos eléctricos y electrónicos, póngase en contacto con su vendedor o proveedor para obtener más información.

Información sobre la eliminación en otros países fuera de la Unión Europea:
Estos símbolos solamente son válidos en la Unión Europea. Si desea desechar estos artículos, póngase en contacto con las autoridades locales o con el vendedor y pregúnteles el método correcto.

Cd

Nota sobre el símbolo de pila (dos ejemplos de símbolos en la parte inferior):
Este símbolo se puede utilizar en combinación con un símbolo químico. En este caso, cumple el requisito establecido por la Directiva de la UE sobre pilas correspondiente a la sustancia química utilizada.

(58-M03 WEEE battery es 01)

Informações para os usuários relativas à coleta e à eliminação de baterias e equipamentos usados

Os símbolos ilustrados, presentes em produtos, embalagens e/ou incluídos na documentação associada, indicam que as baterias e os produtos elétricos e eletrônicos usados não devem ser descartados juntamente com os resíduos domésticos em geral.
O procedimento correto consiste no tratamento, na recuperação e na reciclagem de produtos e baterias usados, que devem ser levados aos pontos de coleta adequados, em conformidade com a legislação nacional em vigor.

O descarte desses produtos e baterias de forma adequada permite poupar recursos valiosos e evitar potenciais efeitos prejudiciais para a saúde pública e para o ambiente, associados ao processamento incorreto dos resíduos.

Para obter mais informações relativas à coleta e à reciclagem de baterias e produtos usados, contate as autoridades locais, o serviço de descarte de resíduos ou o ponto de venda onde foram adquiridos os itens relevantes.

Informações para usuários empresariais na União Europeia:
Para descartar equipamentos elétricos e eletrônicos, contate o seu revendedor ou fornecedor para obter informações adicionais.

Informações relativas ao descarte em países não pertencentes à União Europeia:
Estes símbolos são válidos exclusivamente na União Europeia. Caso pretenda descartar esses tipos de itens, contate as autoridades locais ou o seu revendedor e informe-se sobre o procedimento correto de descarte.

Cd

Nota relativa ao símbolo referente a baterias (os dois exemplos de símbolos na parte inferior):
Este símbolo poderá ser apresentado juntamente com um símbolo químico. Nesse caso, ele estará em conformidade com os requisitos estabelecidos na diretiva da UE sobre baterias no âmbito do elemento químico relacionado.

(58-M03 WEEE battery pt-br 01)

Informazioni per gli utenti sulla raccolta e lo smaltimento di vecchia attrezzatura e batterie usate

Questi simboli sui prodotti, sull'imballaggio e/o sui documenti che li accompagnano, indicano che i prodotti elettrici ed elettronici e le batterie non devono essere mischiati con i rifiuti generici.
Per il trattamento, il recupero e il riciclaggio appropriato di vecchi prodotti e batterie usate, si prega di portarli ai punti di raccolta designati, in accordo con la legislazione locale.

Smaltendo correttamente questi prodotti e batterie si potranno recuperare risorse preziose, oltre a prevenire potenziali effetti negativi sulla salute e l'ambiente che potrebbero sorgere a causa del trattamento improprio dei rifiuti.

Per ulteriori informazioni sulla raccolta e il riciclaggio di vecchi prodotti e batterie, si prega di contattare l'amministrazione comunale locale, il servizio di smaltimento dei rifiuti o il punto vendita dove sono stati acquistati gli articoli.

Per utenti imprenditori dell'Unione europea:
Se si desidera scartare attrezzatura elettrica ed elettronica, si prega di contattare il proprio rivenditore o il proprio fornitore per ulteriori informazioni.

Informazioni sullo smaltimento negli altri Paesi al di fuori dell'Unione europea:
Questi simboli sono validi solamente nell'Unione Europea; se si desidera scartare questi articoli, si prega di contattare le autorità locali o il rivenditore e richiedere informazioni sulla corretta modalità di smaltimento.

Cd

Note per il simbolo della batteria (in basso due esempi del simbolo):
È possibile che questo simbolo sia usato in combinazione con un simbolo chimico. Questo caso è conforme al requisito stabilito dalle Direttive UE sulle batterie relative agli elementi chimici contenuti.

(58-M03 WEEE battery it 01)

Important Notice: Guarantee Information for customers in European Economic Area (EEA) and Switzerland

English

Important Notice: Guarantee Information for customers in EEA* and Switzerland

For detailed guarantee information about this Yamaha product, and Pan-EEA* and Switzerland warranty service, please either visit the website address below (Printable file is available at our website) or contact the Yamaha representative office for your country. * EEA: European Economic Area

Deutsch

Wichtiger Hinweis: Garantie-Information für Kunden in der EWR* und der Schweiz

Für nähere Garantie-Information über dieses Produkt von Yamaha, sowie über den Pan-EWR*- und Schweizer Garantieservice, besuchen Sie bitte entweder die folgend angegebene Internetadresse (eine druckfähige Version befindet sich auch auf unserer Webseite), oder wenden Sie sich an den für Ihr Land zuständigen Yamaha-Vertrieb. *EWR: Europäischer Wirtschaftsraum

Français

Remarque importante: informations de garantie pour les clients de l'EEE et la Suisse

Pour des informations plus détaillées sur la garantie de ce produit Yamaha et sur le service de garantie applicable dans l'ensemble de l'EEE ainsi qu'en Suisse, consultez notre site Web à l'adresse ci-dessous (le fichier imprimable est disponible sur notre site Web) ou contactez directement Yamaha dans votre pays de résidence. * EEE : Espace Economique Européen

Nederlands

Belangrijke mededeling: Garantie-informatie voor klanten in de EER* en Zwitserland

Voor gedetailleerde garantie-informatie over dit Yamaha-product en de garantieservice in heel de EER* en Zwitserland, gaat u naar de onderstaande website (u vind een afdrukbaar bestand op onze website) of neemt u contact op met de vertegenwoordiging van Yamaha in uw land. * EER: Europese Economische Ruimte

Español

Aviso importante: información sobre la garantía para los clientes del EEE* y Suiza

Para una información detallada sobre este producto Yamaha y sobre el soporte de garantía en la zona EEE* y Suiza, visite la dirección web que se incluye más abajo (la version del archivo para imprimir esta disponible en nuestro sitio web) o póngase en contacto con el representante de Yamaha en su país. * EEE: Espacio Económico Europeo

Italiano

Avviso importante: informazioni sulla garanzia per i clienti residenti nell'EEA* e in Svizzera

Per informazioni dettagliate sulla garanzia relativa a questo prodotto Yamaha e l'assistenza in garanzia nei paesi EEA* e in Svizzera, potete consultare il sito Web all'indirizzo riportato di seguito (è disponibile il file in formato stampabile) oppure contattare l'ufficio di rappresentanza locale della Yamaha. * EEA: Area Economica Europea

Português

Aviso importante: informações sobre as garantias para clientes da AEE* e da Suíça

Para obter uma informação pormenorizada sobre este produto da Yamaha e sobre o serviço de garantia na AEE* e na Suíça, visite o site a seguir (o arquivo para impressão está disponível no nosso site) ou entre em contato com o escritório de representação da Yamaha no seu país. * AEE: Área Econômica Européia

Ελληνικά

Σημαντική σημείωση: Πληροφορίες εγγύησης για τους πελάτες στον ΕΟΧ* και Ελβετία

Για λεπτομερείς πληροφορίες εγγύησης σχετικά με το παρόν προϊόν της Yamaha και την κάλυψη εγγύησης σε όλες τις χώρες του ΕΟΧ και την Ελβετία, επισκεφτείτε την παρακάτω ιστοσελίδα (Εκτυπώσιμη μορφή είναι διαθέσιμη στην ιστοσελίδα μας) ή απευθυνθείτε στην αντιπροσωπεία της Yamaha στη χώρα σας. * ΕΟΧ: Ευρωπαϊκός Οικονομικός Χώρος

Svenska

Viktigt: Garantiinformation för kunder i EES-området* och Schweiz

För detaljerad information om denna Yamahaprodukt samt garantiservice i hela EES-området* och Schweiz kan du antingen besöka nedanstående webbaddress (en utskriftsvänlig fil finns på webbplatsen) eller kontakta Yamahas officiella representant i ditt land. * EES: Europeiska Ekonomiska Samarbetsområdet

Norsk

Viktig merknad: Garantiinformasjon for kunder i EØS* og Sveits

Detaljert garantiinformasjon om dette Yamaha-produktet og garantiservice for hele EØS-området* og Sveits kan fås enten ved å besøke nettadressen nedenfor (utskriftsversjon finnes på våre nettsider) eller kontakte kontakte Yamaha-kontoret i landet der du bor. *EØS: Det europeiske økonomiske samarbeidsområdet

Dansk

Vigtig oplysning: Garantioplysninger til kunder i EØO* og Schweiz

De kan finde detaljerede garantioplysninger om dette Yamaha-produkt og den fælles garantiserviceordning for EØO* (og Schweiz) ved at besøge det websted, der er angivet nedenfor (der findes en fil, som kan udskrives, på vores websted), eller ved at kontakte Yamahas nationale repræsentationskontor i det land, hvor De bor. * EØO: Det Europæiske Økonomiske Område

Suomi

Tärkeä ilmoitus: Takuutiedot Euroopan talousalueen (ETA)* ja Sveitsin asiakkaille

Tämän Yamaha-tuotteen sekä ETA-alueen ja Sveitsin takuuta koskevat yksityiskohtaiset tiedot saatte alla olevasta nettiosoitteesta. (Tulostettava tiedosto saatavissa sivustollamme.) Voitte myös ottaa yhteyttä paikalliseen Yamaha-edustajaan. *ETA: Euroopan talousalue

Polski

Ważne: Warunki gwarancyjne obowiązujące w EOG* i Szwajcarii

Aby dowiedzieć się więcej na temat warunków gwarancyjnych tego produktu firmy Yamaha i serwisu gwarancyjnego w całym EOG* i Szwajcarii, należy odwiedzić wskazaną poniżej stronę internetową (Plik gotowy do wydruku znajduje się na naszej stronie internetowej) lub skontaktować się z przedstawicielstwem firmy Yamaha w swoim kraju. * EOG — Europejski Obszar Gospodarczy

Česky

Důležité oznámení: Záruční informace pro zákazníky v EHS* a ve Švýcarsku

Podrobné záruční informace o tomto produktu Yamaha a záručním servisu v celém EHS* a ve Švýcarsku naleznete na níže uvedené webové adrese (soubor k tisku je dostupný na našich webových stránkách) nebo se můžete obrátit na zastoupení firmy Yamaha ve své zemi. * EHS: Evropský hospodářský prostor

Magyar

Fontos figyelmeztetés: Garancia-információk az EGT* területén és Svájcban élő vásárlók számára

A jelen Yamaha termékre vonatkozó részletes garancia-információk, valamint az EGT*-re és Svájcra kiterjedő garanciális szolgáltatás tekintetében keresse fel webhelyünket az alábbi címen (a webhelyen nyomtatható fájlt is talál), vagy pedig lépjen kapcsolatba az országában működő Yamaha képviseleti irodával. * EGT: Európai Gazdasági Térség

Eesti keel

Oluline märkus: Garantiiteave Euroopa Majanduspiirkonna (EMP)* ja Šveitsi klientidele

Täpsema teabe saamiseks selle Yamaha toote garantii ning kogu Euroopa Majanduspiirkonna ja Šveitsi garantiiteeninduse kohta, külastage palun veebisaiti alljärgneval aadressil (meie saidil on saadaval prinditav fail) või pöörduge Teie regiooni Yamaha esinduse poole. * EMP: Euroopa Majanduspiirkond

Latviešu

Svarīgs paziņojums: garantijas informācija klientiem EEZ* un Šveicē

Lai saņemtu detalizētu garantijas informāciju par šo Yamaha produktu, kā arī garantijas apkalpošanu EEZ* un Šveicē, lūdzu, apmeklējiet zemāk norādīto tīmekļa vietnes adresi (tīmekļa vietnē ir pieejams drukājams fails) vai sazinieties ar jūsu valsti apkalpojošo Yamaha pārstāvniecību. * EEZ: Eiropas Ekonomikas zona

Lietuvių kalba

Dėmesio: informacija dėl garantijos pirkėjams EEE* ir Šveicarijoje

Jei reikia išsamios informacijos apie šį „Yamaha" produktą ir jo techninę priežiūrą visoje EEE* ir Šveicarijoje, apsilankykite mūsų svetainėje toliau nurodytu adresu (svetainėje yra spausdintinas failas) arba kreipkitės į „Yamaha" atstovybę savo šaliai. *EEE – Europos ekonominė erdvė

Slovenčina

Dôležité upozornenie: Informácie o záruke pre zákazníkov v EHP* a Švajčiarsku

Podrobné informácie o záruke týkajúce sa tohto produktu od spoločnosti Yamaha a garančnom servise v EHP* a Švajčiarsku nájdete na webovej stránke uvedenej nižšie (na našej webovej stránke je k dispozícii súbor na tlač) alebo sa obráťte na zástupcu spoločnosti Yamaha vo svojej krajine. * EHP: Európsky hospodársky priestor

Slovenščina

Pomembno obvestilo: Informacije o garanciji za kupce v EGP* in Švici

Za podrobnejše informacije o tem Yamahinem izdelku ter garancijskem servisu v celotnem EGP in Švici, obiščite spletno mesto, ki je navedeno spodaj (natisljiva datoteka je na voljo na našem spletnem mestu), ali se obrnite na Yamahinega predstavnika v svoji državi. * EGP: Evropski gospodarski prostor

Български език

Важно съобщение: Информация за гаранцията за клиенти в ЕИП* и Швейцария

За подробна информация за гаранцията за този продукт на Yamaha и гаранционното обслужване в паневропейската зона на ЕИП* и Швейцария или посетете посочения по-долу уеб сайт (на нашия уеб сайт има файл за печат), или се свържете с представителния офис на Yamaha във вашата страна. * ЕИП: Европейско икономическо пространство

Limba română

Notificare importantă: Informații despre garanție pentru clienții din SEE* și Elveția

Pentru informații detaliate privind acest produs Yamaha și serviciul de garanție Pan-SEE* și Elveția, vizitați site-ul la adresa de mai jos (fișierul imprimabil este disponibil pe site-ul nostru) sau contactați biroul reprezentanței Yamaha din țara dumneavoastră. * SEE: Spațiul Economic European

Hrvatski

Važna obavijest: Informacije o jamstvu za države EGP-a i Švicarske

Za detaljne informacije o jamstvu za ovaj Yamahin proizvod te jamstvenom servisu za cijeli EGP i Švicarsku, molimo Vas da posjetite web-stranicu navedenu u nastavku ili kontaktirate ovlaštenog Yamahinog dobavljača u svojoj zemlji. * EGP: Europski gospodarski prostor

https://europe.yamaha.com/warranty/

URL_5

ADDRESS LIST

NORTH AMERICA

CANADA
Yamaha Canada Music Ltd.
135 Milner Avenue, Toronto, Ontario,
M1S 3R1, Canada
Tel: +1-416-298-1311

U.S.A.
Yamaha Corporation of America
6600 Orangethorpe Avenue, Buena Park, CA
90620, U.S.A.
Tel: +1-714-522-9011

CENTRAL & SOUTH AMERICA

MEXICO
Yamaha de México, S.A. de C.V.
Av. Insurgentes Sur 1647 Piso 9, Col. San José
Insurgentes, Delegación Benito Juárez, CDMX,
C.P. 03900, México
Tel: +52-55-5804-0600

BRAZIL
Yamaha Musical do Brasil Ltda.
Praça Professor José Lannes, 40-Cjs 21 e 22,
Brooklin Paulista Novo CEP 04571-100 – São
Paulo – SP, Brazil
Tel: +55-11-3704-1377

ARGENTINA
Yamaha Music Latin America, S.A.,
Sucursal Argentina
Olga Cossettini 1553, Piso 4 Norte,
Madero Este-C1107CEK,
Buenos Aires, Argentina
Tel: +54-11-4119-7000

PANAMA AND OTHER LATIN AMERICAN/CARIBBEAN REGIONS
Yamaha Music Latin America, S.A.
Edif. Torre Banco General, Piso 7, Urbanización
Marbella, Calle 47 y Aquilino de la Guardia,
Ciudad de Panamá, República de Panamá
Tel: +507-269-5311

EUROPE

THE UNITED KINGDOM/IRELAND
Yamaha Music Europe GmbH (UK)
Sherbourne Drive, Tilbrook, Milton Keynes,
MK7 8BL, U.K.
Tel: +44-1908-366700

GERMANY
Yamaha Music Europe GmbH
Siemensstrasse 22-34, 25462 Rellingen, Germany
Tel: +49-4101-303-0

SWITZERLAND/LIECHTENSTEIN
Yamaha Music Europe GmbH, Branch
Switzerland in Thalwil
Seestrasse 18a, 8800 Thalwil, Switzerland
Tel: +41-44-3878080

AUSTRIA/BULGARIA/ CZECH REPUBLIC/HUNGARY/ ROMANIA/SLOVAKIA/SLOVENIA
Yamaha Music Europe GmbH
Branch Austria
Schleiergasse 20, 1100 Wien, Austria
Tel: +43-1-60203900

POLAND
Yamaha Music Europe
Sp.z o.o. Oddział w Polsce
ul. Młynarska 48, 01-171 Warszawa, Poland
Tel: +48-22-880-08-88

MALTA
Olimpus Music Ltd.
Valletta Road, Mosta MST9010, Malta
Tel: +356-2133-2093

NETHERLANDS/BELGIUM/ LUXEMBOURG
Yamaha Music Europe Branch Benelux
Wattbaan 1 3439ML Nieuwegein, The Netherlands
Tel: +31-347-358040

FRANCE
Yamaha Music Europe
7 rue Ambroise Croizat, Zone d'activités de Pariest,
77183 Croissy-Beaubourg, France
Tel: +33-1-6461-4000

ITALY
Yamaha Music Europe GmbH, Branch Italy
Via Tinelli N.67/69 20855 Gerno di Lesmo (MB),
Italy
Tel: +39-039-9065-1

SPAIN/PORTUGAL
Yamaha Music Europe GmbH Ibérica, Sucursal en España
Ctra. de la Coruña km. 17,200, 28231
Las Rozas de Madrid, Spain
Tel: +34-91-639-88-88

GREECE
Philippos Nakas S.A. The Music House
19th klm. Leof. Lavriou 190 02 Peania – Attiki,
Greece
Tel: +30-210-6686168

SWEDEN/FINLAND/ICELAND
Yamaha Music Europe GmbH Germany Filial Scandinavia
JA Wettergrensgata 1, 400 43 Göteborg, Sweden
Tel: +46-31-89-34-00

DENMARK
Yamaha Music Denmark,
Fillial of Yamaha Music Europe GmbH, Tyskland
Generatorvej 8C, ST. TH. , 2860 Søborg, Denmark
Tel: +45-44-92-49-00

NORWAY
Yamaha Music Europe GmbH Germany - Norwegian Branch
c/o Box 30053, 400 43 Göteborg, Sweden
Tel: +47-6716-7800

CYPRUS
Yamaha Music Europe GmbH
Siemensstrasse 22-34, 25462 Rellingen, Germany
Tel: +49-4101-303-0

RUSSIA
Yamaha Music (Russia) LLC.
Room 37, entrance 7, bld. 7, Kievskaya street,
Moscow, 121059, Russia
Tel: +7-495-626-5005

OTHER EUROPEAN REGIONS
Yamaha Music Europe GmbH
Siemensstrasse 22-34, 25462 Rellingen, Germany
Tel: +49-4101-3030

AFRICA

Yamaha Music Gulf FZE
JAFZA-16, Office 512, P.O.Box 17328,
Jebel Ali FZE, Dubai, UAE
Tel: +971-4-801-1500

MIDDLE EAST

TURKEY
Ertekin Electronik tlc. ve san. as
Kagithane Ofis ParkBaglar Cad.
No: 14 D/6 Kagithane 34406
ISTANBUL / TÜRKIYE
Tel: +90-212-312-24-24

OTHER REGIONS
Yamaha Music Gulf FZE
JAFZA-16, Office 512, P.O.Box 17328,
Jebel Ali FZE, Dubai, UAE
Tel: +971-4-801-1500

ASIA

MAINLAND CHINA
Yamaha Music & Electronics (China) Co.,Ltd.
2F, Yunhedasha, 1818 Xinzha-lu, Jingan-qu,
Shanghai, China
Tel: +86-400-051-7700

INDIA
Yamaha Music India Private Limited
P-401, JMD Megapolis, Sector-48, Sohna Road,
Gurugram-122018, Haryana, India
Tel: +91-124-485-3300

INDONESIA
PT Yamaha Musik Indonesia Distributor
Yamaha Music Center Bldg. Jalan Jend. Gatot
Subroto Kav. 4, Jakarta 12930, Indonesia
Tel: +62-21-520-2577

KOREA
Yamaha Music Korea Ltd.
11F, Prudential Tower, 298, Gangnam-daero,
Gangnam-gu, Seoul, 06253, Korea
Tel: +82-2-3467-3300

MALAYSIA
Yamaha Music (Malaysia) Sdn. Bhd.
No.8, Jalan Perbandaran, Kelana Jaya, 47301
Petaling Jaya, Selangor, Malaysia
Tel: +60-3-78030900

SINGAPORE
Yamaha Music (Asia) Private Limited
Block 202 Hougang Street 21, #02-00,
Singapore 530202, Singapore
Tel: +65-6740-9200

TAIWAN
Yamaha Music & Electronics Taiwan Co.,Ltd.
2F., No.1, Yuandong Rd., Banqiao Dist.,
New Taipei City 22063, Taiwan
Tel: +886-2-7741-8888

THAILAND
Siam Music Yamaha Co., Ltd.
3, 4, 15, 16th Fl., Siam Motors Building,
891/1 Rama 1 Road, Wangmai,
Pathumwan, Bangkok 10330, Thailand
Tel: +66-2215-2622

VIETNAM
Yamaha Music Vietnam Company Limited
15th Floor, Nam A Bank Tower, 201-203 Cach
Mang Thang Tam St., Ward 4, Dist.3,
Ho Chi Minh City, Vietnam
Tel: +84-8-3818-1122

OTHER ASIAN REGIONS
http://asia.yamaha.com/

OCEANIA

AUSTRALIA
Yamaha Music Australia Pty. Ltd.
Level 1, 80 Market Street, South Melbourne,
VIC 3205, Australia
Tel: +61-3-9693-5111

REGIONS AND TRUST TERRITORIES IN PACIFIC OCEAN
http://asia.yamaha.com/

Head Office/Manufacturer: Yamaha Corporation 10-1, Nakazawa-cho, Naka-ku, Hamamatsu, 430-8650, Japan
Importer (European Union): Yamaha Music Europe GmbH Siemensstrasse 22-34, 25462 Rellingen, Germany
Importer (United Kingdom): Yamaha Music Europe GmbH (UK) Sherbourne Drive, Tilbrook, Milton Keynes, MK7 8BL, United Kingdom

雅马哈乐器音响（中国）投资有限公司
上海市静安区新闸路 1818 号云和大厦 2 楼
客户服务热线：4000517700
公司网址：https://www.yamaha.com.cn

制造商：雅马哈株式会社
制造商地址：日本静冈县滨松市中区中泽町 10-1
进口商：雅马哈乐器音响（中国）投资有限公司
进口商地址：上海市静安区新闸路 1818 号云和大厦 2 楼
原产地：印度尼西亚

台灣山葉音樂股份有限公司
YAMAHA MUSIC & ELECTRONICS TAIWAN CO.,LTD.
https://tw.yamaha.com
總公司：(02) 7741-8888 新北市板橋區遠東路1號2樓
客服專線：0809-091388

ヤマハ株式会社
〒430-8650 静岡県浜松市中区中沢町 10-1

Yamaha Pro Audio global website
https://www.yamahaproaudio.com/

Yamaha Downloads
https://download.yamaha.com/

© 2022 Yamaha Corporation
Published 11/2022
2022年11月 发行
MWEI-B1

VGH6760