StarTech.com
Hard-to-find made easy®

CPU Wall Mount

CPUWALLMNT

*actual product may vary from photos

FR: Guide de l'utilisateur - fr.startech.com
DE: Bedienungsanleitung - de.startech.com
ES: Guía del usuario - es.startech.com
NL: Gebruiksaanwijzing - nl.startech.com
PT: Guia do usuário - pt.startech.com
IT: Guida per l'uso - it.startech.com

For the latest information, technical specifications, and support for this product, please visit www.StarTech.com/CPUWALLMNT.

Manual Revision: 12/04/2018

Use of Trademarks, Registered Trademarks, and other Protected Names and Symbols

This manual may make reference to trademarks, registered trademarks, and other protected names and/or symbols of third-party companies not related in any way to StarTech.com. Where they occur these references are for illustrative purposes only and do not represent an endorsement of a product or service by StarTech.com, or an endorsement of the product(s) to which this manual applies by the third-party company in question. Regardless of any direct acknowledgement elsewhere in the body of this document, StarTech.com hereby acknowledges that all trademarks, registered trademarks, service marks, and other protected names and/or symbols contained in this manual and related documents are the property of their respective holders.

Warning statements

Make sure that you assemble this product according to the instructions.

Read the entire manual and make sure that you understand the instructions before you start to assemble and use this product.

Never operate this product if parts are missing or damaged.

Do not exceed the weight capacity of this product. Overloading this product might result in injury or property damage. This product can support the following weight: 22 lb. (10 kg).

Make sure that the surface that you are attaching this product to can safely support the combined weight of the equipment and all of the hardware and components.

Wall structures vary, and it is important to make sure that the type of wall structure and mounting hardware that you are using will properly support the mounted equipment. Failure to do so might result in personal injury and/or equipment damage. The wall structure should be capable of supporting at least four times the weight of the mounted equipment.

The mounting hardware included with this product might not be adequate for some wall structures. If you lack the necessary expertise to attach this product to the wall structure that you're using, contact a construction professional to install the wall mount or to provide specific mounting instructions for your wall structure.

Dichiarazioni di avvertenza

Assicurarsi di Assemblare il prodotto secondo le istruzioni.

Leggere l'intero manuale e assicurarsi di aver compreso tutte le istruzioni prima di iniziare ad assemblare e a utilizzare questo prodotto.

Non utilizzare il prodotto in presenza di parti mancanti o danneggiate.

Non superare la capacità di carico del prodotto. Il sovraccarico del prodotto potrebbe causare danni o lesioni. Il prodotto è in grado di sostenere il seguente peso: 10 kg.

Assicurarsi che la superficie alla quale si sta fissando il prodotto sia in grado di sostenere in sicurezza il peso combinato dell'apparecchiatura e di tutti i componenti e gli hardware.

La struttura dei muri può variare. È quindi importante verificare che il tipo di struttura e gli accessori di montaggio utilizzati sorreggano senza problemi l'apparecchiatura montata. Linosservanza di questa indicazione potrebbe causare lesioni personali e/o danni all'apparecchiatura. La struttura del muro dovrebbe essere in grado di sostenere un peso fino a quattro volte superiore a quello dell'apparecchiatura montata.

L'hardware di montaggio incluso con il prodotto potrebbe non essere adeguato ad alcune strutture murarie. Se l'utente non dispone delle competenze necessarie per agganciare il prodotto alla struttura muraria in uso, dovrà contattare un professionista edile per installare il supporto a parete o ottenere istruzioni di montaggio per la struttura muraria in uso.

Varningsmeddelanden

Se till att du monterar produkten i enlighet med instruktionerna.

Läs hela manualen och se till att du förstår instruktionerna innan du börjar montera och använda produkten.

Använd aldrig produkten om delar saknas eller är skadade.

Överskrid inte produktens vikthkapacitet. Överbelastning av produkten kan orsaka skada på person eller egendom. Denna produkt har stöd för följande vikter: 10 kg.

Se till att ytan som du fäster produkten till kan klara av den kombinerade vikten av utrustningen, all hårdvara och alla komponenter.

Eftersom väggstrukturer varierar är det viktigt att kontrollera att väggstrukturen och monteringsutrustningen som du använder klarar av den monterade utrustningen. Om du inte gör det kan skada på person och/eller utrustning uppstå. Väggstrukturen ska kunna klara av minst fyra gånger vikten av den monterade utrustningen.

Monteringsutrustningen som medföljer produkten kanske inte är lämplig för vissa väggstrukturer. Om du saknar nödvändiga kunskaper för att fästa denna produkt på väggstrukturen som du använder, kontakta en professionell konstruktör för att installera väggmonteringen eller för att ge specifika monteringsinstruktioner för din väggstruktur.

Avertissements

Assemblez ce produit conformément aux instructions.

Lisez tout le manuel et assurez-vous que vous comprenez les instructions avant de commencer à assembler et utiliser ce produit.

N'utilisez pas ce produit si des pièces sont endommagées ou manquantes.

Ne dépassez pas la capacité pondérale du produit. Une surcharge du produit peut entraîner des blessures ou des dommages matériels. Ce produit peut supporter : 10 kg.

Assurez-vous que la surface à laquelle vous fixez ce produit peut supporter le poids combiné des équipements, ainsi que de tous les éléments matériels et composants.

Les structures des murs varient. Vous devez impérativement vérifier que le type de mur et le matériel de fixation que vous utilisez permettent de soutenir correctement l'équipement. Dans le cas contraire, vous risquez de vous blesser ou d'endommager le matériel. La structure du mur doit pouvoir supporter au moins quatre fois le poids de l'équipement monté.

Le matériel de fixation inclus avec ce produit n'est pas forcément approprié pour toutes les structures de murs. Si vous ne disposez pas des compétences nécessaires pour installer ce produit au mur, contactez un professionnel afin qu'il installe le support mural ou qu'il vous fournisse les instructions de montage spécifiques à votre structure de mur.

Waarschuwingen

Zorg dat u dit product volgens de instructies in elkaar zet.

Lees de gehele handleiding en zorg dat u de instructies begrijpt voordat u dit product in elkaar zet en gebruikt.

Gebruik dit product nooit als er onderdelen ontbreken of beschadigd zijn.

Overschrijd de maximale capaciteit van dit product niet. Overbelasting van dit product kan letsel of materiële schade veroorzaken. Dit product kan het volgende gewicht ondersteunen: 10 kg.

Zorg dat het oppervlak waaraan u dit product bevestigt, het gecombineerde gewicht van de apparatuur en alle bevestigingsmaterialen en componenten veilig kan ondersteunen.

Omdat wandstructuren verschillen, is het belangrijk dat u ervoor zorgt dat het type wandstructuur en de montagemiddelen die u gebruikt de gemonteerde apparatuur goed ondersteunen. Anders zou lichamelijk letsel en/of schade aan de apparatuur kunnen ontstaan. De wandstructuur moet voldoende zijn om ten minste vier keer het gewicht van de gemonteerde apparatuur te ondersteunen.Zorg dat dit product volgens de instructies in elkaar wordt gezet. Indien dit niet goed gebeurt kan lichamelijk letsel of materiële schade ontstaan.

De bij dit product geleverde montagemiddelen kunnen niet geschikt zijn voor sommige wandstructuren. Als u onvoldoende kennis hebt om dit product aan de door u gebruikte wandstructuur te bevestigen, neem dan contact op met een bouwkundige om de steun aan de muur te installeren of specifieke montage-instructies voor uw wandstructuur te geven.

Mensagens de aviso

Certifique-se de que monta este produto de acordo com as instruções.

Leia todo o manual e certifique-se de que entende as instruções antes de começar a montar e a utilizar este produto.

Nunca opere este produto se faltarem peças ou estas estiverem danificadas.

Não exceda a capacidade de peso deste produto. Sobrecarregar este produto pode resultar em ferimentos ou danos de propriedade. Este produto pode suportar o seguinte peso: 10 kg.

Certifique-se de que a superfície à qual está a anexar este produto pode suportar em segurança o peso combinado do equipamento e todo o hardware e componentes.

As estruturas de parede variam e é importante certificar-se de que o tipo de estrutura de parede e hardware de montagem que está a usar irá suportar devidamente o equipamento montado. O incumprimento pode resultar em ferimentos pessoais e/ou danos no equipamento. A estrutura de parede deve ser capaz de suportar pelo menos quatro vezes o peso do equipamento montado.

O hardware de montagem incluído com este produto pode não ser adequado para algumas estruturas de parede. Se não tiver o conhecimento necessário para fixar este produto à estrutura de parede que está a usar, contacte um profissional de construção para fazer a instalação em parede ou para fornecer instruções de montagem específicas para a sua estrutura de parede.

Advertencias de uso

Asegúrese de ensamblar este producto según las instrucciones.

Lea todo el manual y asegúrese de haber comprendido bien las instrucciones antes de proceder con el ensamblaje y el uso de este producto.

Nunca opere o ponga en funcionamiento este producto si faltan piezas o hay daños en las mismas.

Asegúrese de no exceder la capacidad de peso de este producto. La sobrecarga de este producto puede causar lesiones personales o daños en la propiedad. Este producto tiene capacidad para el siguiente peso: 10 kg.

Asegúrese de que la superficie a la que fijará este producto tiene capacidad para soportar de forma segura el peso conjunto del equipo instalado y todo el hardware y los componentes.

Las estructuras de una pared pueden variar, por lo que es importante determinar con certeza el tipo de estructura de la pared y el hardware de montaje que se va a utilizar para soportar debidamente el equipo. De lo contrario, se pueden producir lesiones personales o daños del equipo. La estructura de la pared debe ser capaz de soportar al menos cuatro veces el peso del equipo instalado.

El hardware de montaje incluido con este producto puede no ser adecuado para algunas estructuras de pared. Si no tiene la experiencia suficiente para fijar este producto a la estructura de la pared correspondiente, póngase en contacto con un profesional de la construcción para instalar el soporte de pared o para que le proporcione las instrucciones específicas de montaje para su estructura de pared.

Warnhinweise

Beachten Sie bei der Montage dieses Produkts die Montageanweisungen.

Bevor Sie dieses Produkt montieren und verwenden, lesen Sie das gesamte Handbuch und vergewissern Sie sich, dass Sie die Anweisungen verstanden haben.

Das Produkt darf nicht bedient werden, wenn Teile fehlen oder beschädigt sind.

Überschreiten Sie nicht die Tragkraft dieses Produkts. Ein Überladen dieses Produkts kann zu Verletzungen oder zur Beschädigung des Produkts führen. Dieses Produkt ist für die nachstehende Tragkraft ausgelegt: 10 kg.

Vergewissern Sie sich, dass das Produkt auf der Fläche, auf der Sie es aufstellen, das kombinierte Gewicht der Geräte sowie der gesamten Hardware und aller Komponenten sicher tragen kann.

Wandkonstruktionen können variieren, daher ist es wichtig sicherzustellen, dass die Art der Wandkonstruktion und das verwendete Montagezubehör zur ordnungsgemäßen Montage der Geräte geeignet sind. Andernfalls kann es zu Verletzungen und/oder zur Beschädigung des Produkts kommen. Die Wandkonstruktion sollte mindestens das vierfache Gewicht der montierten Geräte tragen können.

Das mitgelieferte Montagematerial ist möglicherweise nicht für jede Wand geeignet. Wenn Ihnen die nötigen Fachkenntnisse zum Anbringen dieses Produkts an einer Wand fehlen, lassen Sie einen Fachmann den Wandhalter anbringen, oder lassen Sie sich von einem Fachmann Montageanweisungen für Ihre Wand erteilen.

注意

必ず取扱説明書に従って本製品の組み立てを行って下さい。

最初に取扱説明書を最後まで読み, 本製品の組み立て方をすべて理解してから組み立て作業を始めて下さい。

本製品で要求された最大積載重量を超えないようにして下さい。最大積載重量をオーバーした場合、怪我をする恐れや器物破損の恐れがあります. 本製品は, 以下の重量まで対応できます: 10 kg.

使用する装置および取付け金具とパーツの総重量に本製品の設置面が耐えうる構造になっているか確認して下さい。

壁面の構造は建物によって異なります. 壁面の構造や使用する取り付け金具が設置する装置を適切に支えられるかどうか, 必ず確認してください。この注意を怠ると, 怪我をする恐れや器物破損の恐れがあります. 設置する装置の少なくとも4倍の重量に耐えられる壁面構造が必要となります。

壁面の構造によっては, 本製品に付属の取り付け金具では十分な強度が得られないことがあります。ご使用の壁面に適切に設置できるか判断しかねる場合は, 内装工事の専門業者にお問い合わせの上, 本製品の壁面設置を依頼するか, 特定の壁面に適した設置方法について助言を受けてください。

Table of Contents

Warnings.....i

Product dimensions.....1

Product diagrams.....2

Package contents.....3

Requirements.....4

Disassemble the CPU mount.....4

Mount the rear bracket to the wall.....5

Reassemble the CPU mount.....8

Position the adjustable straps.....9

Insert the CPU.....10

Technical support.....12

Warranty information.....12

Product dimensions

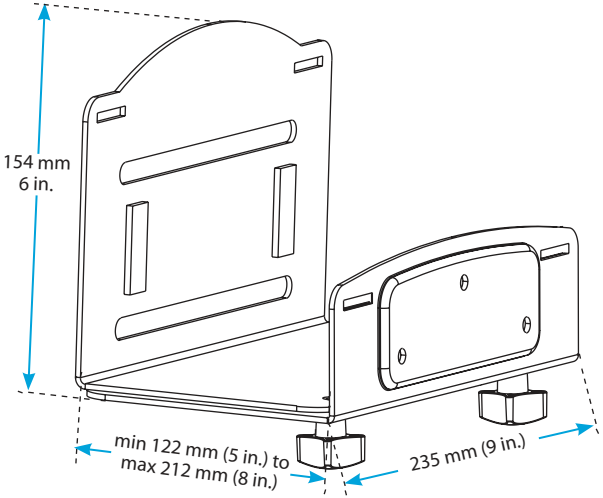

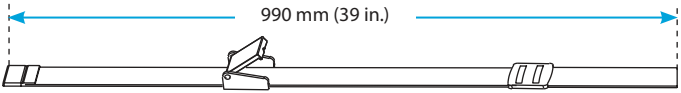

Product diagrams

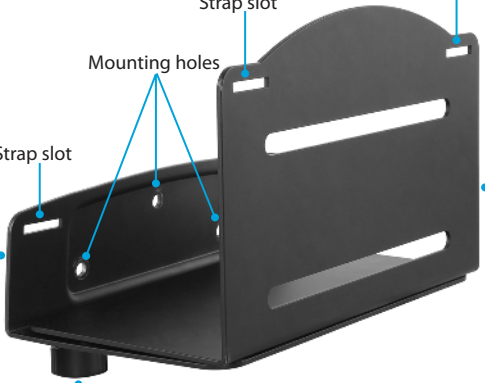

StarTech.com
Hard-to-find made easy®

Package contents

1

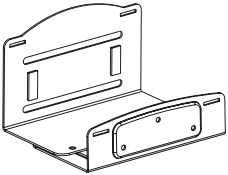

CPU mount

Qty: One

2

Adjustable straps

Qty: Two

3

Wall anchors

Qty: Three

4

Screws

Qty: Three

5

Thumbscrews

Qty: Two

6

Instruction manual

Qty: One

Requirements

- Wrench

Requirements are subject to change. For the latest requirements, please visit www.StarTech.com/CPUWALLMNT.

Disassemble the CPU mount

1. Use a wrench to remove the two M6 nuts from the bottom of the CPU mount. (*figure 1*)

Note: You can discard the M6 nuts because you won't need to use them to assemble or mount the CPU mount.

figure 1

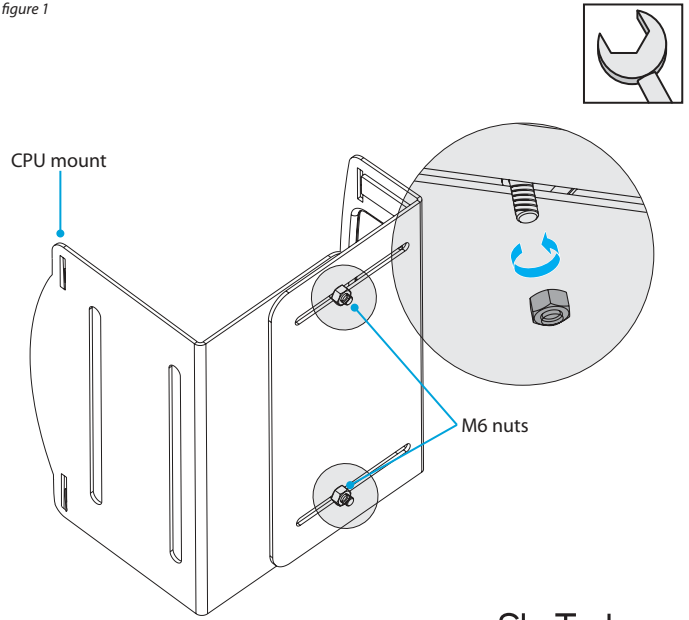

2. Separate the front bracket from the rear bracket. (*figure 2*)

Note: Put the washers in a safe place because you will need to use them later in the assembly process.

figure 2

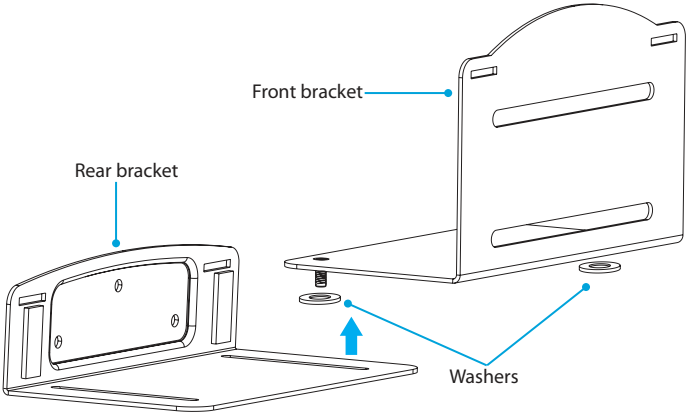

Mount the rear bracket to the wall

Warning! Wall structures vary, and it is important to make sure that the type of structure and mounting hardware that you are using will properly support the mounted equipment. Failure to do so may result in personal injury and/or equipment damage. The wall should be capable of supporting at least four times the weight of the mounted equipment.

Warning! The mounting hardware included with this product might not be adequate for some wall structures. If you lack the necessary expertise to attach this product to the wall that you are using, contact a construction professional to install the CPU wall mount or to provide specific mounting instructions for your wall.

1. Position the rear bracket where you want to hang the CPU wall mount and make sure that the rear bracket is level.
2. Use the three mounting holes in the rear bracket as a template and mark the wall. (*figure 3*)

figure 3

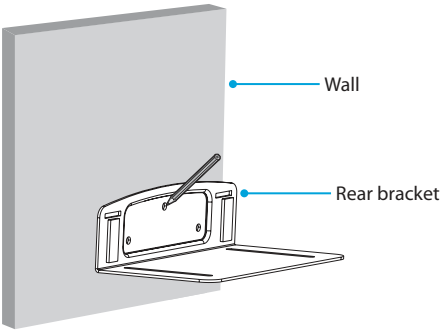

3. Orient one of the adjustable straps so that the side with the clasp and the buckle is facing upwards. (*figure 4*)

figure 4

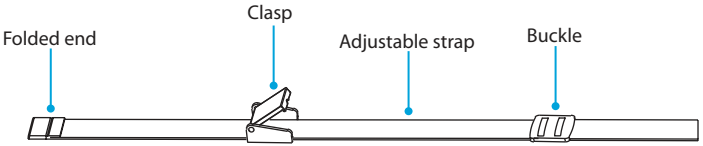

StarTech.com
Hard-to-find made easy®

4. Thread the end of the adjustable strap with the folded edge through one of the strap slots on the rear bracket. (*figure 5*)

figure 5

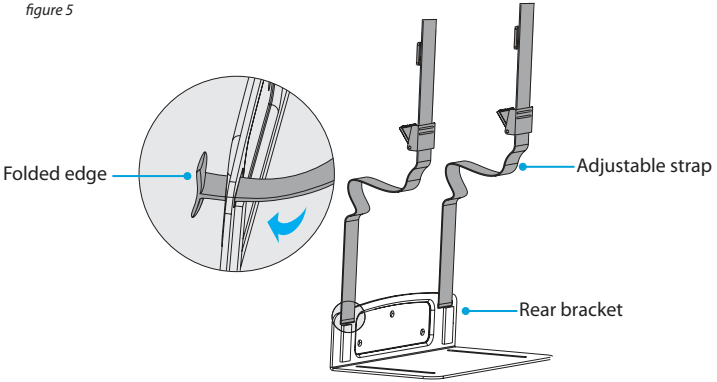

5. Repeat steps 3 and 4 to attach the other adjustable strap.
6. Follow the appropriate steps for the type of wall that you're attaching the CPU wall mount to and attach the rear bracket to the wall. (*figure 6)*

figure 6

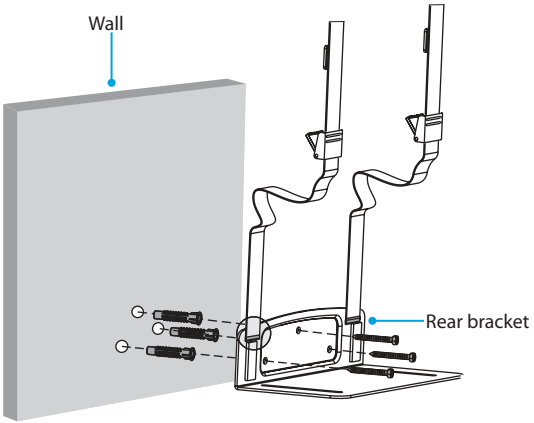

Reassemble the CPU mount

1. Take the washers that you removed when you disassembled the CPU mount and thread them onto the bolts in the front bracket.
2. Place the bolts in the front bracket into the slots in the rear bracket.
3. Measure the width of the CPU that you're mounting.
4. Slide the front bracket along the slots in the rear bracket until the CPU mount is the width of your CPU.
5. Thread the thumbscrews onto the bolts on the bottom of the CPU mount, and tighten them into place. (*figure 7)*

figure 7

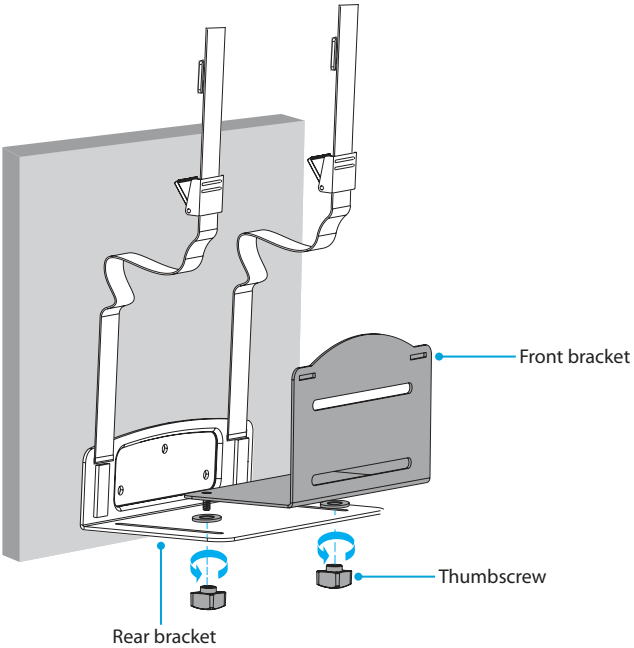

StarTech.com
Hard-to-find made easy®

Position the adjustable straps

1. Thread the end of one of the adjustable straps through the corresponding strap slot on the front bracket.
2. Fold the adjustable strap back on itself and thread the end of the strap upwards through the first slot in the buckle and then downwards through the second slot in the buckle.
3. Adjust the strap until it's the approximate height of your CPU.
4. Repeat steps 1 to 3 to position the second adjustable strap. (*figure 8*)

figure 8

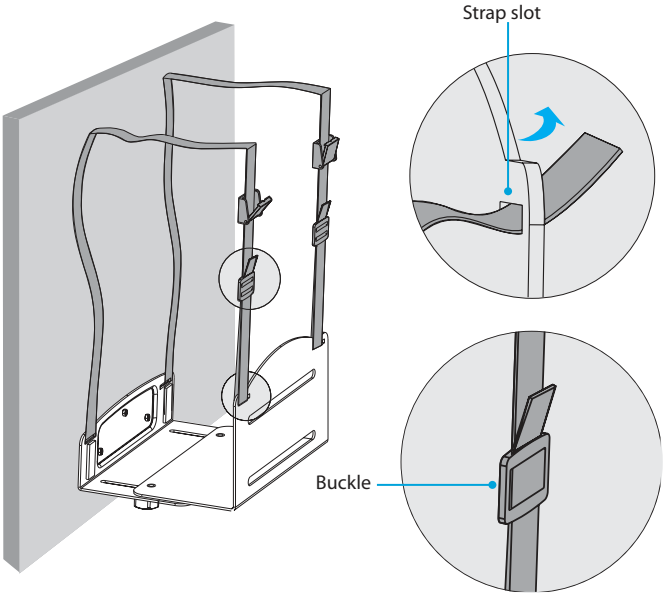

Insert the CPU

Warning! Do not exceed the weight capacity of this product. Overloading this product might result in injury or property damage. This product can support the following weight: 22 lb. (10 kg).

Warning! Before you add equipment to this product, make sure that you have properly assembled and installed it, and that the product can support the weight of the equipment that you are adding to it.

Warning! Make sure that the surface that you are attaching this product to can safely support the combined weight of the equipment and all of the hardware and components.

1. Carefully slide your disconnected CPU onto the CPU mount and under the adjustable straps. (*figure 9*)

figure 9

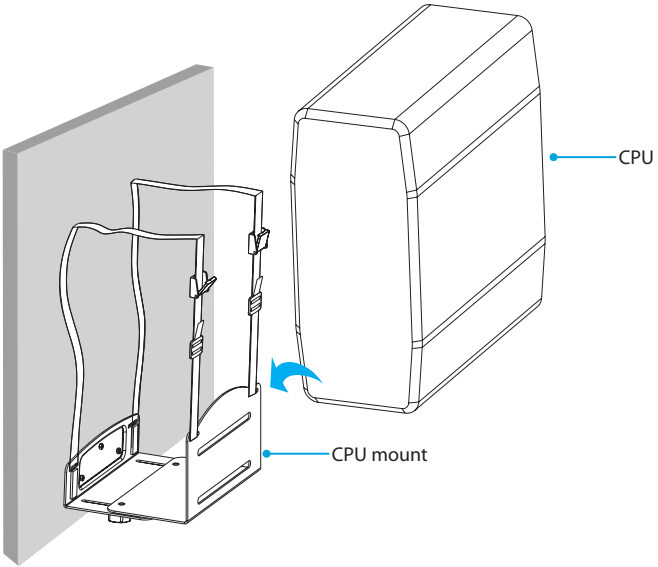

2. Adjust the straps until they fit snugly against the CPU.
3. Open the clasps on the adjustable straps and pull the end of the adjustable straps through the clasps.
4. Close the clasps. (*figure 10*)

figure 10

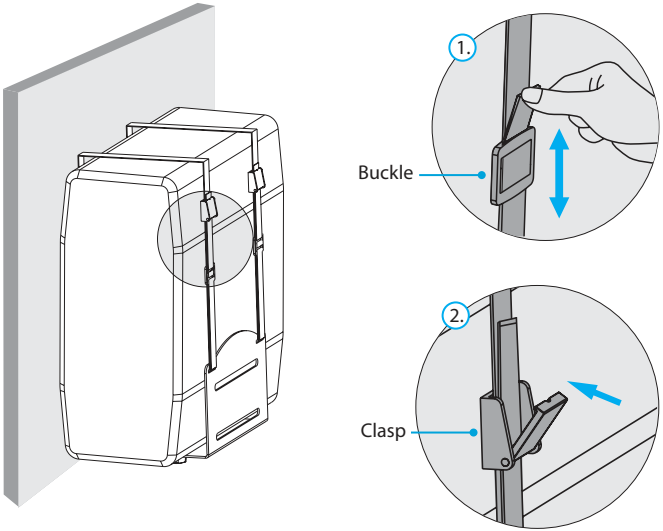

Technical support

StarTech.com's lifetime technical support is an integral part of our commitment to provide industry-leading solutions. If you ever need help with your product, visit **www.startech.com/support** and access our comprehensive selection of online tools, documentation, and downloads.

For the latest drivers/software, please visit **www.startech.com/downloads**

Warranty information

This product is backed by a five-year warranty.

StarTech.com warrants its products against defects in materials and workmanship for the periods noted, following the initial date of purchase. During this period, the products may be returned for repair, or replacement with equivalent products at our discretion. The warranty covers parts and labor costs only. StarTech.com does not warrant its products from defects or damages arising from misuse, abuse, alteration, or normal wear and tear.

Limitation of liability

In no event shall the liability of StarTech.com Ltd. and StarTech.com USA LLP (or their officers, directors, employees or agents) for any damages (whether direct or indirect, special, punitive, incidental, consequential, or otherwise), loss of profits, loss of business, or any pecuniary loss, arising out of or related to the use of the product exceed the actual price paid for the product. Some states do not allow the exclusion or limitation of incidental or consequential damages. If such laws apply, the limitations or exclusions contained in this statement may not apply to you.

Hard-to-find made easy. At StarTech.com, that isn't a slogan. It's a promise.

StarTech.com is your one-stop source for every connectivity part you need. From the latest technology to legacy products — and all the parts that bridge the old and new — we can help you find the parts that connect your solutions.

We make it easy to locate the parts, and we quickly deliver them wherever they need to go. Just talk to one of our tech advisors or visit our website. You'll be connected to the products you need in no time.

Visit www.startech.com for complete information on all StarTech.com products and to access exclusive resources and time-saving tools.

StarTech.com is an ISO 9001 Registered manufacturer of connectivity and technology parts. StarTech.com was founded in 1985 and has operations in the United States, Canada, the United Kingdom and Taiwan servicing a worldwide market.