BOSCH

Register your new device on MyBosch now and get free benefits:
bosch-home.com/welcome

MyBosch

Extractor hood

DWK91LT60 **DWK91LT60B** **DWK91LT20** **DWK91LT65**

[en] User manual and installation instructions

Further information and explanations are available online:

Table of contents

INFORMATION FOR USE

1 **Safety** ... 2
2 **Avoiding material damage** ... 4
3 **Environmental protection and saving energy** ... 5
4 **Operating modes** ... 5
5 **Familiarising yourself with your appliance** ... 6
6 **Before using for the first time** ... 7
7 **Basic operation** ... 7
8 **Additional functions in the Home Connect app** [1] ... 8
9 **Home Connect** ... 9
10 **Hob-based hood control** ... 10
11 **Cleaning and servicing** ... 10
12 **Troubleshooting** ... 12
13 **Disposal** ... 13
14 **Customer Service** ... 13
15 **Accessories** ... 13
16 **Declaration of Conformity** ... 14
17 **Information regarding Free and Open Source Software** ... 15
18 **Test information** ... 15

19 **INSTALLATION INSTRUCTIONS** ... 15
19.5 **Secure installation** ... 17

1 Safety

Observe the following safety instructions.

1.1 General information

- Read this instruction manual carefully.
- Keep the instruction manual and the product information safe for future reference or for the next owner.
- Do not connect the appliance if it has been damaged in transit.

1.2 Intended use

Only use this appliance:
- For extracting cooking vapour.
- in private households and in enclosed spaces in a domestic environment.
- up to an altitude of max. 4000 m above sea level.

1.3 Restriction on user group

This appliance may be used by children aged 8 or over and by people who have reduced physical, sensory or mental abilities or inadequate experience and/or knowledge, provided that they are supervised or have been instructed on how to use the appliance safely and have understood the resulting dangers.
Do not let children play with the appliance.
Children must not perform cleaning or user maintenance unless they are at least 15 years old and are being supervised.
Keep children under the age of 8 years away from the appliance and power cable.

1.4 Safe use

⚠ WARNING – Risk of fire!

Fatty deposits in the grease filters may catch fire.
- ▸ Never operate the appliance without a grease filter.
- ▸ Clean the grease filters regularly.
- ▸ Never work with naked flames close to the appliance (e.g. flambéing).
- ▸ Do not install the appliance near a solid fuel heating appliance (e.g. wood- or coal-burning) unless the heating appliance has a sealed, non-removable cover. There must be no flying sparks.

[1] Available depending on software version. Further information on availability can be found on the website.

Hot oil and fat ignites very quickly.

- Always supervise hot oil and fat.
- Never extinguish burning oil or fat with water. Switch off the hotplate. Extinguish flames carefully using a lid, fire blanket or something similar and leave to cool down.

When gas burners are in operation without any cookware placed on them, they can build up a lot of heat. A ventilation appliance installed above the cooker may become damaged or catch fire.

- Only operate the gas burners with cookware on them.

Operating multiple gas hobs at the same time generates a great deal of heat. A ventilation appliance installed above the cooker may become damaged or catch fire.

- Only operate the gas hobs with cookware on them.
- Select the highest fan setting.
- Never operate two gas hobs simultaneously on the highest flame for longer than 15 minutes. Two gas hobs correspond to one large burner.
- Never operate large burners of more than 5 kW with the highest flame for longer than 15 minutes, e.g. a wok.

Fatty deposits in the grease filters may catch fire.

- Clean the grease filters regularly.

⚠ WARNING – Risk of suffocation!

Children may put packaging material over their heads or wrap themselves up in it and suffocate.

- Keep packaging material away from children.
- Do not let children play with packaging material.

Children may breathe in or swallow small parts, causing them to suffocate.

- Keep small parts away from children.
- Do not let children play with small parts.

⚠ WARNING – Risk of poisoning!

Risk of poisoning from flue gases being drawn back in. Room-air-dependent heat-producing appliances (e.g. gas, oil, wood or coal-operated heaters, continuous flow heaters or water heaters) obtain combustion air from the room in which they are installed and discharge the exhaust gases into the open through an exhaust gas system (e.g. a chimney). With the extractor hood switched on, air is extracted from the kitchen and the adjacent rooms. Without an adequate supply of air, the air pressure falls below atmospheric pressure. Toxic gases from the chimney or the extraction shaft are sucked back into the living space.

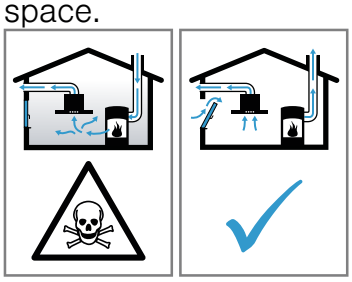

- Always ensure adequate fresh air in the room if the appliance is being operated in exhaust air mode at the same time as a room-air-dependent heat-producing appliance is being operated.
- It is only possible to safely operate the appliance if the pressure in the room in which the heating appliance is installed does not fall below 4 Pa (0.04 mbar). This can be achieved whenever the air needed for combustion is able to enter through openings that cannot be sealed, for example in doors, windows, incoming/exhaust air wall boxes or by other technical means. An incoming/exhaust air wall box alone is not sufficient to ensure compliance with the limit.
- In any case, consult your responsible chimney sweep. They are able to assess the house's entire ventilation setup and will suggest the suitable ventilation measures to you.
- Unrestricted operation is possible if the appliance is operated exclusively in circulating-air mode.

Using a gas cooking appliance leads to a build-up of heat, moisture and combustion products in the room where the appliance is installed.

- Switch on the extractor hood when using a gas cooking appliance.

⚠ WARNING – Risk of burns!

The accessible parts of the appliance become hot during operation.

- Never touch these hot parts.
- Keep children at a safe distance.

The appliance becomes hot during operation.

- Allow the appliance to cool down before cleaning.

⚠ WARNING – Risk of injury!

Components inside the appliance may have sharp edges.

- Carefully clean the appliance interior.

Items placed on the appliance may fall off.

- Do not place any objects on the appliance.

Changes to the electrical or mechanical assembly are dangerous and may lead to malfunctions.

- Do not make any changes to the electrical or mechanical assembly.

The filter cover may swing out.

- Open the filter cover slowly.
- Take hold of the filter cover after opening until it no longer swings out.
- Close the filter cover slowly.

Risk of injury when opening and closing the hinges.

- Keep your hands away from the hinges.

The light emitted by LED lights is very dazzling, and can damage the eyes (risk group 1).

- Do not look directly into the switched-on LED lights for longer than 100 seconds.

Improper repairs are dangerous.

- Repairs to the appliance should only be carried out by trained specialist staff.
- If the appliance is defective, call Customer Service.
  → *"Customer Service", Page 13*

⚠ WARNING – Risk of electric shock!

If the appliance or the power cord is damaged, this is dangerous.

- Never operate a damaged appliance.
- Never pull on the power cord to unplug the appliance. Always unplug the appliance at the mains.
- If the appliance or the power cord is damaged, immediately unplug the power cord or switch off the fuse in the fuse box.
- Call customer services. → *Page 13*

Improper repairs are dangerous.

- Repairs to the appliance should only be carried out by trained specialist staff.
- Only use genuine spare parts when repairing the appliance.
- If the power cord of this appliance is damaged, it must be replaced by trained specialist staff.

An ingress of moisture can cause an electric shock.

- Before cleaning, pull out the mains plug or switch off the fuse in the fuse box.
- Do not use steam- or high-pressure cleaners to clean the appliance.

Penetrating moisture may cause an electric shock.

- Do not use wet sponge cloths.

⚠ WARNING – Risk of explosion!

Highly caustic alkaline or highly acidic cleaning agents in conjunction with aluminium parts in the interior of the appliance may cause explosions.

- Never use highly caustic alkaline or highly acidic cleaning agents. In particular, do not use commercial or industrial cleaning agents in conjunction with aluminium parts, e.g. grease filter on extractor hoods.

2 Avoiding material damage

ATTENTION!

Condensate may cause corrosion damage.

- To prevent condensation from building up, switch on the appliance during cooking.

If moisture gets into the controls, this may result in damage.

- Never clean controls with a wet cloth.

Incorrect cleaning damages the surfaces.

- Follow the cleaning instructions.

- Do not use harsh or abrasive detergents.
- Clean stainless steel surfaces in the direction of the finish only.
- Never clean controls with stainless steel cleaners.

Condensation that flows back in may damage the appliance.

- The air extraction duct must be installed with a gradient of at least 1° from the appliance.

If you put incorrect stress on the design elements, they may break off.

- Do not pull design elements.
- Do not place objects on the design elements or hang objects from them.

There is a risk of surface damage if you do not peel off the protective film.

- Remove the protective film from all parts of the appliance before using for the first time.

Painted surfaces are easily damaged.

- Follow the cleaning instructions.
  → *"Cleaning the appliance", Page 10*
- Ensure that the painted surfaces are not scratched.

3 Environmental protection and saving energy

3.1 Disposing of packaging

The packaging materials are environmentally compatible and can be recycled.

- Sort the individual components by type and dispose of them separately.

3.2 Saving energy

If you follow these instructions, your appliance will use less power.

Adjust the fan speed to the amount of steam produced during cooking.

- The lower the fan speed, the less energy is consumed.
  Only use the intensive mode as required.

If cooking produces large amounts of steam, select a higher fan speed in good time.

- The odours are distributed around the room less.

Switch off the lighting if it is no longer required.

- When the lighting is switched off, it does not consume any energy.

Clean or replace the filters at regular intervals.

- The effectiveness of the filter is retained.

Put the cooking lid on.

- The cooking vapours and condensation are reduced.

Only use the additional functions if required.

- Switching off additional functions reduces power consumption.

4 Operating modes

You can use your appliance in air extraction mode or circulating-air mode.

4.1 Air extraction mode

The air which is drawn in is cleaned by the grease filters and conveyed to the exterior by a pipe system.

The air must not be discharged into a flue that is used for exhausting fumes from appliances burning gas or other fuels (not applicable to appliances that only discharge the air back into the room).

- If the exhaust air is to be conveyed into a non-functioning smoke or exhaust gas flue, you must obtain the consent of the heating engineer responsible.
- If the exhaust air is conveyed through the external wall, a telescopic duct should be used.

4.2 Air recirculation

The air which is drawn in is cleaned by the grease filters and an odour filter, and conveyed back into the room.

To bind odours in air recirculation mode, you must install an odour filter. The different options for operating the appliance in air circulation mode can be found in our catalogue. Alternatively, ask your dealer. The required accessories are available from specialist retailers, from our after-sales service or from the online shop.
→ *"Accessories", Page 13*

5 Familiarising yourself with your appliance

5.1 Overall view

You can find an overview of the parts of your appliance here.

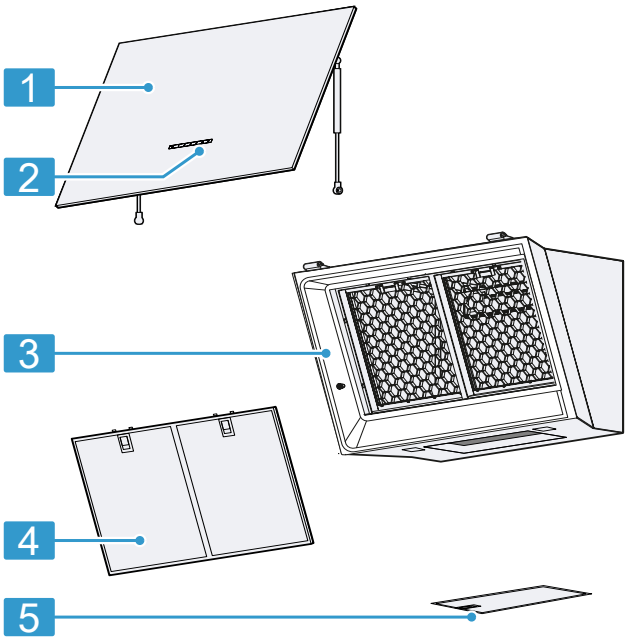

1	Glass plate
2	Control panel
3	Appliance
4	Front grease filter
5	Lower grease filter

5.2 Control panel, variant 1

You can use the control panel to configure all functions of your appliance and to obtain information about the operating status.

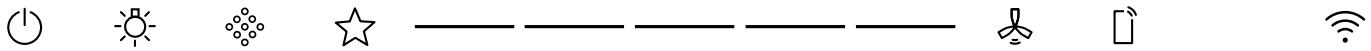

	Switching the appliance on or off
	Switching the lighting on or off Setting the brightness
	Resetting the filter saturation indicator
	Selecting the favourites function

-----	Settings area: 3 fan settings/2 intensive modes
	Switching automatic mode on or off
	Remote display
	Home Connect

5.3 Control panel, variant 2

You can use the control panel to configure all functions of your appliance and to obtain information about the operating status.

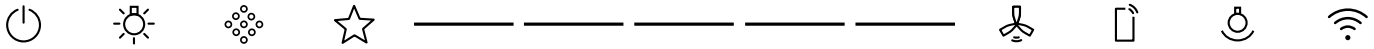

⏻	Switching the appliance on or off
☼	Switching the lighting on or off Setting the brightness
⁂	Resetting the filter saturation indicator
☆	Selecting the favourites function
-----	Settings area: 3 fan settings/2 intensive modes

✇	Switching automatic mode on or off
▯	Remote display
♨	Switching Decorative LED lighting on or off Setting the Decorative LED lighting colour
ᯤ	Home Connect

6 Before using for the first time

Configure the settings for initial start-up. Clean the appliance and accessories.

6.1 Setting an operating mode

Your appliance is set to air extraction mode by default.

Note: When using it in circulating-air mode, you require additional accessories.

- When using it in circulating-air mode, set the operating mode.
  → *"Filter saturation", Page 8*
  → *"Saturation indicator", Page 8*

7 Basic operation

7.1 Switching on the appliance

- Press ⏻.
- ✔ The appliance starts at fan setting 2.

7.2 Switching off the appliance

- Press ⏻.

7.3 Selecting a fan setting

- Select the required fan setting in the settings area -----.

7.4 Switching on intensive mode

If particularly strong odours or vapours develop, you can use intensive mode.

- Select the required intensive mode in the settings area -----.
- ✔ After approx. 6 minutes, the appliance automatically switches to fan setting 3.

7.5 Switching off intensive mode

- Reset to the required fan setting.

7.6 Setting the PowerBoost position

On the appliance, the glass front can be adjusted to an intermediate position. The intermediate position can be used to eliminate particularly strong cooking smells and large amounts of steam.

- Take hold of the glass front in the centre and open it carefully.

7.7 Switching on automatic mode

The optimum fan setting is set automatically using a sensor.

- Press ✇.

7.8 Switching off automatic mode

- Reset to the required fan setting.
- ✔ The ventilation is automatically ended when the sensor detects no further change in the room air quality.
- ✔ Automatic mode runs for a maximum of four hours.

7.9 Sensor sensitivity

In automatic mode, a sensor in the appliance detects the intensity of the cooking odours and roasting odours. Depending on the setting of the sensor sensit-

ivity, the optimum fan setting is automatically switched on. You can change the sensor sensitivity setting in the Home Connect app.
- Factory setting: 3
- Lowest setting: 1
- Highest setting: 5

7.10 Switching on the lighting

The lighting can be switched on and off independently of the ventilation system.
- Press ☼.

7.11 Setting the brightness

- Press and hold ☼ until the required brightness is reached.

7.12 Switching on Decorative LED lighting

You can switch on the Decorative LED lighting independently of the ventilation system.
- Press ♢.

7.13 Setting the Decorative LED lighting colour

Note: You can find other Decorative LED lighting colours and brightness settings in the Home Connect app.
- Press and hold ♢ until the required colour is reached.

7.14 Saturation indicator

If the grease filters or odour filters are saturated, corresponding symbols flash after the appliance is switched off.

Note: You can set the saturation indicator in the Home Connect app depending on the filter used.

Clean the saturated grease filters and, in doing so, observe the cleaning instructions in these instructions. Change the saturated odour filters and observe the instructions in the accompanying instructions.
If odour filters can be regenerated, follow the instructions in the accompanying instructions.

7.15 Resetting the saturation indicator

After cleaning the grease filter or after changing the odour filter, the saturation indicator can be reset.

Requirements
- After the appliance is switched off, ⁂ lights up white for grease filters.
- After the appliance is switched off, ⁂ lights up red for odour filters.
- Press ⁂.
- ✔ The saturation indicator is reset.

7.16 Selecting the favourites function

You can specify 2 favourites functions via the Home Connect app and then select these on your appliance.

Requirement: The appliance is connected to Home Connect.
1. To assign ☆ functions, follow the instructions in the Home Connect app.
2. To select the favourites function 1, press ☆ briefly.
3. To select the favourites function 2, press and hold ☆.

7.17 Remote display

You can use the Home Connect app to set functions for your appliance that are not illustrated on the control panel. If you carry out a function for which there is no display on the control panel, the remote display lights up ▯.

8 Additional functions in the Home Connect app [1]

You can find these functions in the Home Connect app:

8.1 Automatic sensor system

The automatic sensor system activates the fan and individually adjusts the fan performance.

8.2 Decorative LED lighting

In the Home Connect app, you can select from a range of atmospheric colours, completely independently from the ventilation.

8.3 Performance profile

In the Home Connect app, you have the option to set your personal performance profile. You can choose between the noise-optimised or performance-optimised performance profile.

8.4 Filter saturation

You can set the saturation indicator in the Home Connect app depending on the filter used.

8.5 Cooktop-based Hood Control

You can connect your appliance to a Home Connect-compatible hob and, in this way, control the functions of your appliance via the hob.

8.6 Fan run-on

The fan run-on removes remaining odours and is used to dry the odour filter after the cooking process.

[1] Available depending on software version. Further information on availability can be found on the website.

8.7 Interval ventilation

In order to regularly ventilate your kitchen, you can use the interval ventilation. With interval ventilation, the ventilation system switches on and off in the selected setting for the selected time.

8.8 Favourites button

You can specify 2 favourites functions via the Home Connect app and then select these on your appliance.

8.9 Voice Control

You can control your extractor hood using voice control with Amazon Alexa, for example.

8.10 Setting the colour temperature

In the Home Connect app, you can set the colour temperature for the light from cold to warm.

9 Home Connect

This appliance is network-capable. Connecting your appliance to a mobile device lets you control its functions via the Home Connect app, adjust its basic settings and monitor its operating status.
The Home Connect services are not available in every country. The availability of the Home Connect function depends on the availability of Home Connect services in your country. You can find information about this at: www.home-connect.com.

The Home Connect app guides you through the entire login process. Follow the instructions in the Home Connect app to configure the settings.

Tip: Please also follow the instructions in the Home Connect app.

Notes

- Please note the safety precautions in this instruction manual and make sure that they are also observed when operating the appliance via the Home Connect app.
  → *"Safety", Page 2*
- Operating the appliance on the appliance itself always takes priority. During this time it is not possible to operate the appliance using the Home Connect app.
- In networked standby mode, the appliance requires a maximum of 2 W.

9.1 Setting up the Home Connect app

1. Install the Home Connect app on your mobile device.
2. Start the Home Connect app and set up access for Home Connect.
   The Home Connect app guides you through the entire login process.

9.2 Setting up Home Connect

Requirements

- The appliance is switched off.
- You have a mobile device with a current version of the iOS or Android operating system, e.g. a smartphone.
- The Home Connect app has been installed on your mobile device.
- The appliance is receiving signals from the WLAN home network (Wi-Fi) at its installation location.
- The mobile device and the appliance are within range of your home network's Wi-Fi signal.

1. Open the Home Connect app and scan the following QR code.

2. Follow the instructions in the Home Connect app.

9.3 Resetting the connection

- To reset the saved connections to the home network and to Home Connect, press ⚙ twice.

9.4 Software update

Your appliance's software can be updated using the software update function, e.g. for the purposes of optimisation, troubleshooting or security updates.
To do this, you must be a registered Home Connect user, have installed the app on your mobile device and be connected to the Home Connect server.
As soon as a software update is available, you will be informed via the Home Connect app and will be able to start the software update via the app. Once the update has been successfully downloaded, you can start installing it via the Home Connect app if you are in your home network (Wi-Fi). The Home Connect app informs you once installation is successful.

Notes

- The software update consists of two steps.
  - The first step is the download.
  - The second step is the installation on your appliance.
- You can continue to use your appliance as normal while updates are downloading. Depending on your personal settings in the app, software updates can also be set to download automatically.
- Installation takes a few minutes. You cannot use your appliance during installation.
- We recommend that you install security updates as soon as possible.

9.5 Remote diagnostics

Customer Service can use Remote Diagnostics to access your appliance if you contact them, have your appliance connected to the Home Connect server and if Remote Diagnostics is available in the country in which you are using the appliance.

Tip: For further information and details about the availability of Remote Diagnostics in your country, please visit the service/support section of your local website: www.home-connect.com.

9.6 Data protection

Please see the information on data protection.

The first time your appliance is registered on a home network connected to the Internet, your appliance will transmit the following types of data to the Home Connect server (initial registration):

- Unique appliance identification (consisting of appliance codes as well as the MAC address of the Wi-Fi communication module installed).
- Security certificate of the Wi-Fi communication module (to ensure a secure data connection).
- The current software and hardware version of your appliance.
- Status of any previous reset to factory settings.

This initial registration prepares the Home Connect functions for use and is only required when you want to use the Home Connect functions for the first time.

Note: Please note that the Home Connect functions can only be utilised with the Home Connect app. Information on data protection can be retrieved in the Home Connect app.

10 Hob-based hood control

You can connect your appliance to a suitable hob and, in this way, control the functions of your appliance via the hob.
If the hob and the extractor hood are Home Connect-compatible, connect the appliances in the Home Connect app. To do this, connect the two appliances to Home Connect and follow the instructions in the app.

Notes

- Please note the safety precautions in the instruction manual for your appliance and ensure that they are also observed when operating the appliance via the hob-based hood control.
- Operating your appliance always takes priority. It is not possible to use the hob-based hood control during this time.
- You can only connect to the extractor hood via the Home Connect app. Other connection routes are no longer supported.

11 Cleaning and servicing

To keep your appliance working efficiently for a long time, it is important to clean and maintain it carefully.

11.1 Cleaning products

You can obtain suitable cleaning products from after-sales service or the online shop.

⚠ **WARNING – Risk of electric shock!**
An ingress of moisture can cause an electric shock.

- ▸ Before cleaning, pull out the mains plug or switch off the fuse in the fuse box.
- ▸ Do not use steam- or high-pressure cleaners to clean the appliance.

⚠ **WARNING – Risk of burns!**
The appliance becomes hot during operation.

- ▸ Allow the appliance to cool down before cleaning.

ATTENTION!
Unsuitable cleaning products may damage the surfaces of the appliance.

- ▸ Do not use harsh or abrasive detergents.
- ▸ Do not use cleaning products with a high alcohol content.
- ▸ Do not use hard scouring pads or cleaning sponges.
- ▸ Only use glass cleaners, glass scrapers or stainless steel care products if recommended in the cleaning instructions for the relevant part.
- ▸ Wash sponge cloths thoroughly before use.

11.2 Cleaning the appliance

Clean the appliance as specified. This will ensure that the different parts and surfaces of the appliance are not damaged by incorrect cleaning or unsuitable cleaning products.

⚠ **WARNING – Risk of explosion!**
Highly caustic alkaline or highly acidic cleaning agents in conjunction with aluminium parts in the interior of the appliance may cause explosions.

- ▸ Never use highly caustic alkaline or highly acidic cleaning agents. In particular, do not use commercial or industrial cleaning agents in conjunction with aluminium parts, e.g. grease filter on extractor hoods.

⚠ **WARNING – Risk of electric shock!**
An ingress of moisture can cause an electric shock.
- Before cleaning, pull out the mains plug or switch off the fuse in the fuse box.
- Do not use steam- or high-pressure cleaners to clean the appliance.

⚠ **WARNING – Risk of burns!**
The appliance becomes hot during operation.
- Allow the appliance to cool down before cleaning.

⚠ **WARNING – Risk of injury!**
Components inside the appliance may have sharp edges.
- Carefully clean the appliance interior.

If the appliance is operated by another person via the Home Connect app during cleaning, this increases the risk of injury.
- Before cleaning, disconnect the appliance from the Home Connect app.
  → *"Resetting the connection", Page 9*

1. Observe the information regarding the cleaning agents.
   → *"Cleaning products", Page 10*
2. Clean as follows, depending on the surface:
   - Clean stainless steel surfaces in the direction of the finish using a sponge cloth and hot soapy water.
   - Clean painted surfaces using a damp sponge cloth and hot soapy water.
   - Clean aluminium using a soft cloth and glass cleaner.
   - Clean plastic using a soft cloth and glass cleaner.
   - Clean glass using a soft cloth and glass cleaner.
3. Dry with a soft cloth.
4. Apply a thin layer of the stainless steel cleaning product to stainless steel surfaces using a soft cloth.
   You can obtain stainless steel cleaning products from the after-sales service or the online shop.

11.3 Cleaning controls and lights

⚠ **WARNING – Risk of electric shock!**
Penetrating moisture may cause an electric shock.
- Do not use wet sponge cloths.

1. Observe the information regarding the cleaning agents.
   → *"Cleaning products", Page 10*
2. Clean using a damp sponge cloth and hot soapy water.
3. Dry with a soft cloth.

11.4 Removing the grease filter

1. Take hold of the glass front in the centre and open it fully.
2. **ATTENTION!**
   Falling grease filters may damage the hob below.
   - Grip below the grease filter with one hand.

   Open the lock on the grease filter and fold down the grease filter.

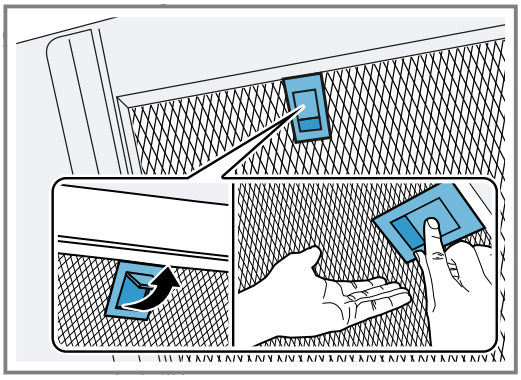

3. Remove the grease filters from the holders.
   To prevent grease from dripping, hold the grease filter horizontally.

11.5 Cleaning grease filters manually

The grease filters filter the grease from the cooking vapour. Regularly cleaned grease filters guarantee a high level of grease removal. We recommend cleaning the grease filters every two months.

⚠ **WARNING – Risk of fire!**
Fatty deposits in the grease filters may catch fire.
- Clean the grease filters regularly.

Requirement: The grease filters have been removed.
→ *"Removing the grease filter", Page 11*

1. Observe the information regarding the cleaning agents.
   → *"Cleaning products", Page 10*
2. Soak the grease filter in hot soapy water.
   Use special grease solvent for stubborn dirt. You can obtain grease solvents from customer service or the online shop.
3. Use a brush to clean the grease filters.
4. Rinse the grease filters thoroughly.
5. Allow the grease filters to drain.

11.6 Cleaning grease filters in the dishwasher

The grease filters filter the grease from the cooking vapour. Regularly cleaned grease filters guarantee a high level of grease removal. We recommend cleaning the grease filters every two months.

⚠ **WARNING – Risk of fire!**
Fatty deposits in the grease filters may catch fire.
- Clean the grease filters regularly.

ATTENTION!
The grease filters may become damaged if they are squeezed in the dishwasher.
- Do not squeeze the grease filters.

Note: When cleaning the grease filter in the dishwasher, light discolouration may occur. This discolouration has no effect on the performance of the metal grease filters.

Requirement: The grease filters have been removed.
→ *"Removing the grease filter", Page 11*

1. Observe the information regarding the cleaning agents.
   → *"Cleaning products", Page 10*
2. Place the grease filters loosely into the dishwasher. Do not clean heavily soiled grease filters with utensils.
   Use special grease solvent for stubborn dirt. You can obtain grease solvents from customer service or the online shop.
3. Start the dishwasher.
   Select a temperature of no more than 70 °C.
4. Allow the grease filters to drain.

11.7 Fitting grease filters

ATTENTION!
Falling grease filters may damage the hob below.
- Grip below the grease filter with one hand.

1. Insert the grease filters.
2. Fold the grease filters upwards and engage the locks.
3. Ensure that the locks engage.
4. Close the glass front.

12 Troubleshooting

You can rectify minor faults on your appliance yourself. Read the troubleshooting information before contacting after-sales service. This will avoid unnecessary costs.

⚠ **WARNING – Risk of injury!**
Improper repairs are dangerous.
- Repairs to the appliance should only be carried out by trained specialist staff.
- If the appliance is defective, call Customer Service.
  → *"Customer Service", Page 13*

⚠ **WARNING – Risk of electric shock!**
Improper repairs are dangerous.
- Repairs to the appliance should only be carried out by trained specialist staff.
- Only use genuine spare parts when repairing the appliance.
- If the power cord of this appliance is damaged, it must be replaced by trained specialist staff.

12.1 Malfunctions

Fault	Cause and troubleshooting
The appliance is not working.	The mains plug of the power cord is not plugged in. ▸ Connect the appliance to the power supply.
	The circuit breaker in the fuse box has tripped. ▸ Check the circuit breaker in the fuse box.
	There has been a power cut. ▸ Check whether the lighting in your room or other appliances are working.
	The plug connection to the glass plate has not been established correctly. ▸ Check the plug connection to the glass plate. → *"Installing the appliance", Page 22*
The LED lighting does not work.	Different causes are possible. ▸ Defective LED lights may be replaced by the manufacturer, their customer service or a qualified technician (electrician) only. ▸ Call → *"Customer Service", Page 13*.
The button illumination does not work.	Different causes are possible. ▸ Call → *"Customer Service", Page 13*.
Home Connect is not working properly.	Different causes are possible. ▸ Go to www.home-connect.com.
The hob-based hood control is not working properly.	It may be necessary to change the settings. ▸ Read the instruction manual for the hob. ▸ Go to www.home-connect.com.
The appliance does not start when it is switched on for the first time.	Software updates may need to be run. ▸ Wait around 15 minutes.

Fault	Cause and troubleshooting
The appliance does not respond.	It may need to be restarted. ▸ Press and hold ⏻ and ☼ for at least 10 seconds. ✔ All of the buttons flash. ✔ The appliance is restarted.
The restart does not work.	Different causes are possible. **1.** Disconnect the appliance from the power supply. – Pull out the mains plug or switch off the fuse in the fuse box. **2.** After approx. 2 minutes, reconnect the appliance to the power supply. ✔ It may take a few minutes until all of the functions are available.
General malfunctions occur.	A software update may be required. ▸ Update the software. → *"Software update", Page 9*

13 Disposal

13.1 Disposing of old appliance

Valuable raw materials can be reused by recycling.

1. Unplug the appliance from the mains.
2. Cut through the power cord.
3. Dispose of the appliance in an environmentally friendly manner.
   Information about current disposal methods are available from your specialist dealer or local authority.

This appliance is labelled in accordance with European Directive 2012/19/EU concerning used electrical and electronic appliances (waste electrical and electronic equipment - WEEE).
The guideline determines the framework for the return and recycling of used appliances as applicable throughout the EU.

14 Customer Service

Function-relevant genuine spare parts according to the corresponding Ecodesign Order can be obtained from Customer Service for a period of at least 10 years from the date on which your appliance was placed on the market within the European Economic Area.

Note: Under the terms of the manufacturer's warranty the use of Customer Service is free of charge.

Detailed information on the warranty period and terms of warranty in your country is available from our after-sales service, your retailer or on our website.
If you contact Customer Service, you will require the product number (E-Nr.), the production number (FD) and the consecutive numbering (Z-Nr.) of your appliance.
The contact details for Customer Service can be found in the enclosed Customer Service directory or on our website.

14.1 Product number (E-Nr.), production number (FD) and consecutive numbering (Z-Nr.)

You can find the product number (E-Nr.), the production number (FD) and the consecutive numbering (Z-Nr.) on the appliance's rating plate.
Depending on the model, the rating plate can be found:

- Inside the appliance (remove grease filters for access).
- On top of the appliance.

Make a note of your appliance's details and the Customer Service telephone number to find them again quickly.

15 Accessories

You can buy accessories from the after-sales service, from specialist retailers or online. Only use original accessories, as these have been specifically designed for your appliance.
Accessories vary from one appliance to another. When purchasing accessories, always quote the exact product number (E no.) of your appliance. → *Page 13*

You can find out which accessories are available for your appliance in our catalogue, in the online shop or from our after-sales service.
www.bosch-home.com

Accessories	Order number
Clean Air Plus air recirculation set	DWZ1BK1I6

Accessories	Order number
Clean Air Plus recirculation kit – flue-free, angled extractor hood	DWZ1BK1V6
Long Life recirculation kit – flue-free, angled extractor hood	DWZ1BK1R1
Long Life odour filter – replacement	DWZ1BK1P1

Accessories	Order number
Duct extension – 1000 mm, black	DWZ0BX6K1
Duct extension – 1500 mm, black	DWZ0BX6L1
Duct extension – 1000 mm, silver	DWZ0BX3K1
Duct extension – 1500 mm, silver	DWZ0BX3L1

16 Declaration of Conformity

BSH Hausgeräte GmbH hereby declares that the appliance with Home Connect functionality conforms to the essential requirements and other relevant provisions of Directive 2014/53/EU.
A detailed RED Declaration of Conformity can be found online at www.bosch-home.com among the additional documents on the product page for your appliance.

Hereby, BSH Hausgeräte GmbH declares that the appliance with Home Connect functionality is in compliance with relevant statutory requirements.[1]
A detailed Declaration of Conformity can be found online at www.bosch-home.co.uk among the additional documents on the product page for your appliance.[1]

2.4 GHz band (2400–2483.5 MHz): Max. 100 mW
5-GHz band (5150–5350 MHz + 5470–5725 MHz): max. 150 mW

	BE	BG	CZ	DK	DE	EE	IE	EL	ES
	FR	HR	IT	CY	LI	LV	LT	LU	HU
	MT	NL	AT	PL	PT	RO	SI	SK	FI
	SE	NO	CH	TR	IS	UK (NI)			
5 GHz WLAN (Wi-Fi): For indoor use only.									

AL	BA	MD	ME	MK	RS	UK	UA
5 GHz WLAN (Wi-Fi): For indoor use only.							

16.1 Statement of Compliance for Great Britain

The full Statement of Compliance according to the Product Security and Telecommunications Infrastructure (Security Requirements for Relevant Connectable Products) Regulations 2023 can be found online at www.bosch-home.co.uk among the additional documents on the product page for your appliance.

Product type
This statement of compliance covers the products described in this information for use whose model identifier group is seen on the title page. The full model identifier is made up of the characters before the slash in the product number (E no.) which can be found on the rating plate. Alternatively, you can also find the model identifier in the first line of the UK Energy Label.

Name and address of manufacturer
BSH Hausgeräte GmbH, Carl-Wery-Strasse 34, 81739 München, Germany
This statement of compliance is prepared by the manufacturer.
The manufacturer, BSH Hausgeräte GmbH deems that it has complied with

- provision 5.1-1 of ETSI EN 303 645 v2.1.1 and, where relevant, provision 5.1-2 of ETSI EN 303 645 v2.1.1;
- provision 5.2-1 of ETSI EN 303 645 v2.1.1;
- provision 5.3-13 of ETSI EN 303 645 v2.1.1.

Support period
BSH Hausgeräte GmbH will provide security updates that are necessary to maintain the main functions free of charge until at least 28/02/2034.

[1] Only applies to Great Britain

17 Information regarding Free and Open Source Software

This product includes software components that are licensed by the copyright holders as free or open source software.
The applicable licence information is stored on your home appliance. You can also access the applicable licence information via your Home Connect app: "Profile -> Legal information -> Licence Information".[1] You can download the licence information on the brand product website. (Please search on the product website for your appliance model and additional documents). Alternatively, you can request the relevant information from ossrequest@bshg.com or BSH Hausgeräte GmbH, Carl-Wery-Str. 34, 81739 Munich, Germany.

The source code will be made available to you on request.
Please send your request to ossrequest@bshg.com or BSH Hausgeräte GmbH, Carl-Wery-Str.34, 81739 Munich, Germany.
Subject: „OSSREQUEST“
The cost of performing your request will be charged to you. This offer is valid for three years from the date of purchase or at least as long as we offer support and spare parts for the relevant appliance.

18 Test information

This information has been produced to facilitate the inspection of the appliance.

- Measured in accordance with EN 61591.
- The appliance is operated in its as-delivered condition.
- The intermediate position of the glass front has been used to check the specified appliance properties.
- Ensure that the filters do not move during the measurement (by changing the appliance position to the installation position).

19 Installation instructions

19.1 Installation video

If you scan this QR code with your smartphone, you can watch a video of the entire installation of the appliance.

[1] Depending on the appliance specifications

19.2 Included with the appliance

After unpacking all parts, check for any damage in transit and completeness of the delivery.

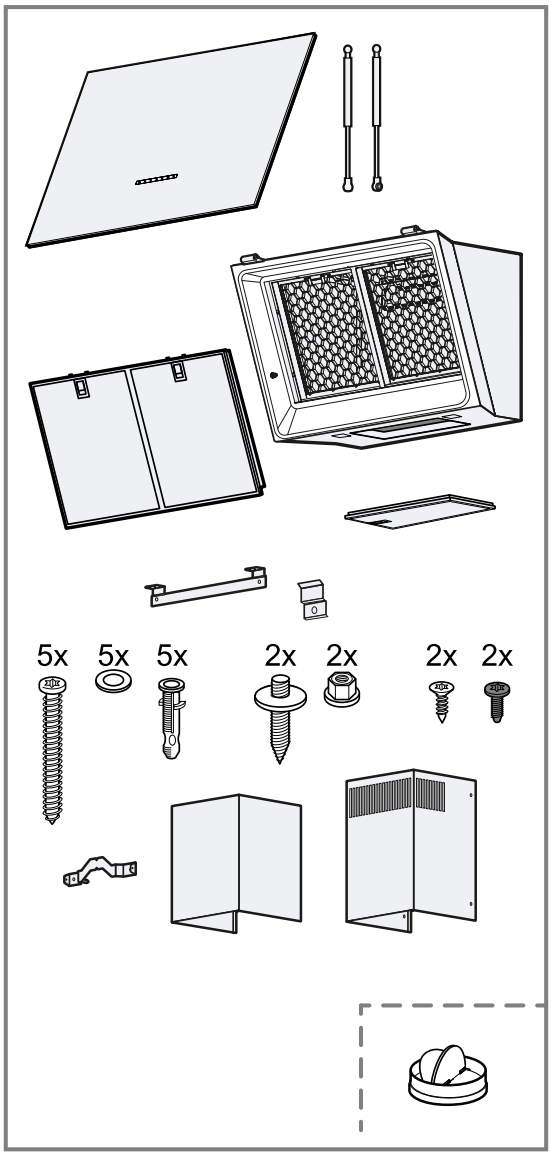

19.3 Dimensions

You will find the dimensions of the appliance here

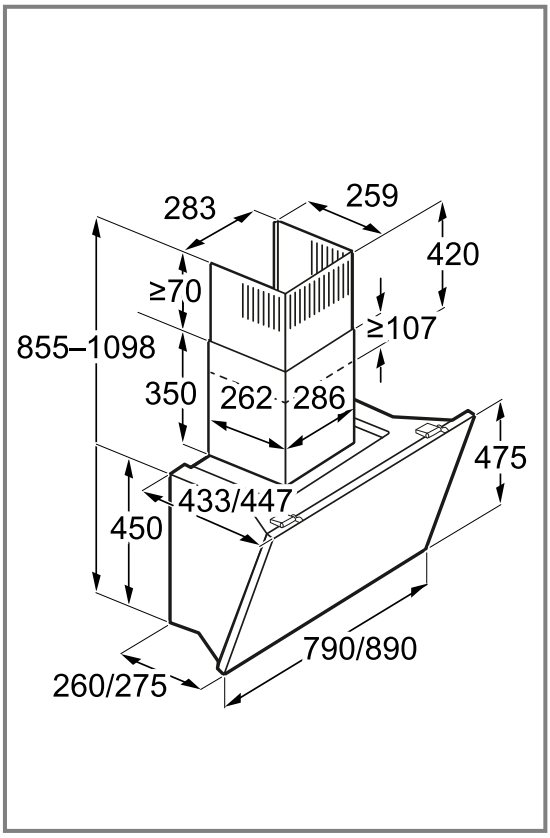

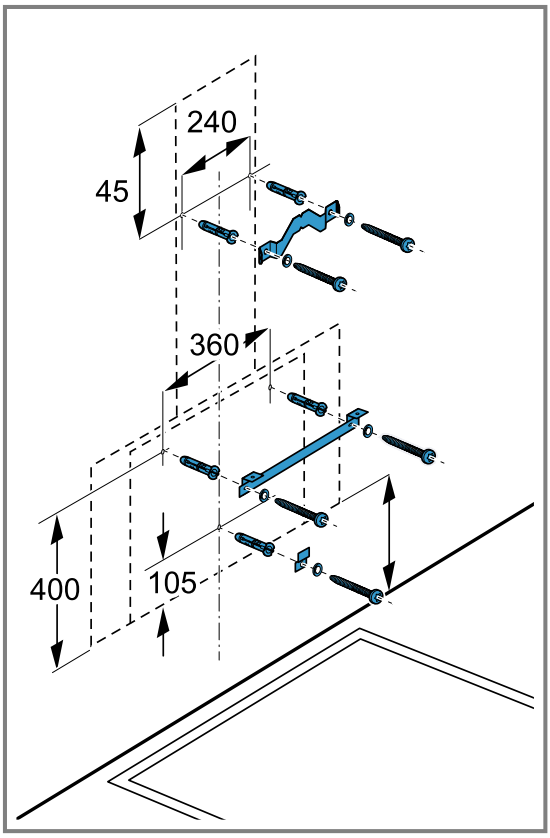

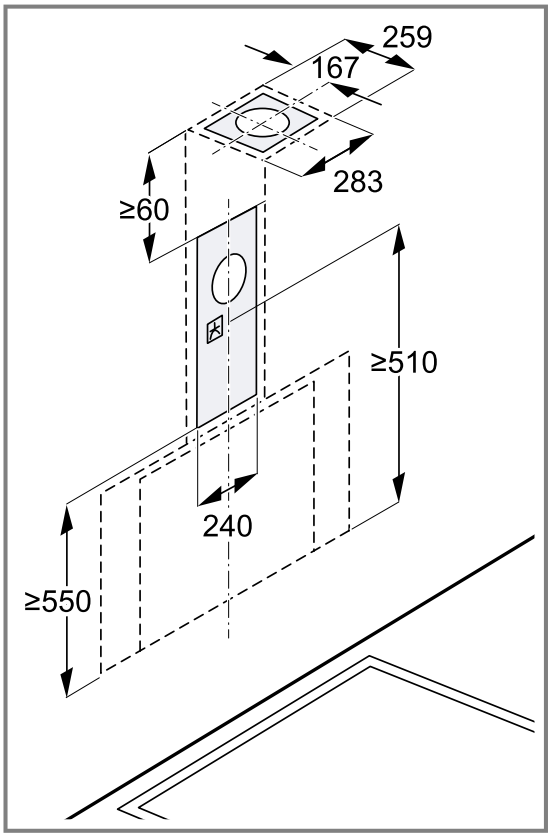

19.4 Safety clearances

Comply with the safety clearances for the appliance.

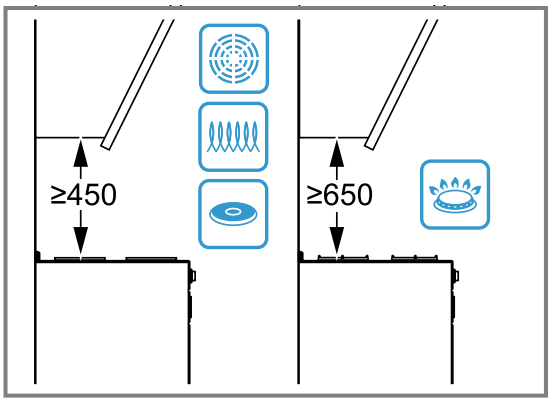

For Australia and New Zealand the minimum safety clearance above electrical cooktops must be 600 mm.

⚠ 19.5 Secure installation

Follow these safety instructions when installing the appliance.

⚠ WARNING – Risk of poisoning!

Risk of poisoning from flue gases being drawn back in. Room-air-dependent heat-producing appliances (e.g. gas, oil, wood or coal-operated heaters, continuous flow heaters or water heaters) obtain combustion air from the room in which they are installed and discharge the exhaust gases into the open through an exhaust gas system (e.g. a chimney). With the extractor hood switched on, air is extracted from the kitchen and the adjacent rooms. Without an adequate supply of air, the air pressure falls below atmospheric pressure. Toxic gases from the chimney or the extraction shaft are sucked back into the living space.

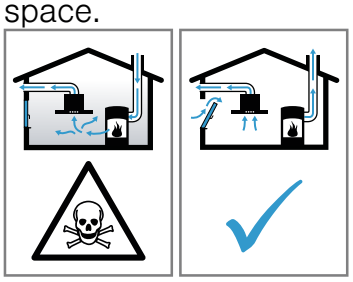

- Always ensure adequate fresh air in the room if the appliance is being operated in exhaust air mode at the same time as a room-air-dependent heat-producing appliance is being operated.
- It is only possible to safely operate the appliance if the pressure in the room in which the heating appliance is installed does not fall below 4 Pa (0.04 mbar). This can be achieved whenever the air needed for combustion is able to enter through openings that cannot be sealed, for example in doors, windows, incoming/exhaust air wall boxes or by other technical means. An incoming/exhaust air wall box alone is not sufficient to ensure compliance with the limit.
- In any case, consult your responsible chimney sweep. They are able to assess the house's entire ventilation setup and will suggest the suitable ventilation measures to you.
- Unrestricted operation is possible if the appliance is operated exclusively in circulating-air mode.

Risk of poisoning from flue gases being drawn back in.

- If an extractor hood with an open-flued heat production source is installed, the power supply for the extractor hood must be provided with a suitable safety switch.

Risk of poisoning from flue gases being drawn back in.

- Do not emit the exhaust air into a smoke or exhaust gas flue that is in operation.
- Do not emit the exhaust air into a shaft that is used to ventilate installation rooms for heat-producing appliances.
- If the exhaust air is to be conveyed into a smoke or exhaust gas flue, you must obtain the consent of the heating engineer responsible.

⚠ WARNING – Risk of suffocation!

Children may put packaging material over their heads or wrap themselves up in it and suffocate.

- Keep packaging material away from children.
- Do not let children play with packaging material.

⚠ WARNING – Risk of fire!

The grease deposits in the grease filter may catch fire.

- Never work with naked flames close to the appliance (e.g. flambéing).
- Do not install the appliance near a heat-producing appliance for solid fuel (e.g. wood or coal) unless a closed, non-removable cover is present. There must be no flying sparks.
- The specified safety clearances must be complied with in order to prevent a build-up of heat.
- Observe the specifications for your cooking appliances. If the installation instructions for the cooking appliances specify a different clearance, the larger of the two must always be provided for. If gas hobs and electric hobs are operated together, the largest specified clearance applies.

⚠ WARNING – Risk of injury!

Components inside the appliance may have sharp edges.

- Wear protective gloves.

The appliance may fall down if it has not been properly fastened in place.

- All fastening components must be fixed firmly and securely in place.

Risk of injury from glass splinters.

- Protect the filter cover against impact.
- Do not drop the filter cover.
- Wear protective goggles during installation.

The appliance is heavy.

- To move the appliance, two people are required.
- Use only suitable tools and equipment.

The appliance is heavy.

- The appliance must not be fitted directly onto plasterboard or similar lightweight materials.
- To ensure correct installation, you must use a material which is sufficiently stable and suitable for both the structural conditions and the weight of the appliance.

Changes to the electrical or mechanical assembly are dangerous and may lead to malfunctions.

- Do not make any changes to the electrical or mechanical assembly.

The filter cover may swing out.

- Open the filter cover slowly.
- Take hold of the filter cover after opening until it no longer swings out.
- Close the filter cover slowly.

Risk of injury when opening and closing the hinges.

- Keep your hands away from the hinges.

⚠ WARNING – Risk of electric shock!

Sharp-edged components inside the appliance may damage the connecting cable.

- Do not kink or trap the connecting cable.

If the appliance or the power cord is damaged, this is dangerous.

- Never operate a damaged appliance.
- Never pull on the power cord to unplug the appliance. Always unplug the appliance at the mains.
- If the appliance or the power cord is damaged, immediately unplug the power cord or switch off the fuse in the fuse box.
- Call customer services. → *Page 13*

Improper repairs are dangerous.
- ▸ Repairs to the appliance should only be carried out by trained specialist staff.
- ▸ Only use genuine spare parts when repairing the appliance.
- ▸ If the power cord of this appliance is damaged, it must be replaced by trained specialist staff.

Incorrect installation is dangerous.
- ▸ Connect and operate the appliance only in accordance with the specifications on the rating plate.
- ▸ Connect the appliance to a power supply with alternating current only via a properly installed socket with earthing.
- ▸ The protective conductor system of the domestic electrical installation must be properly installed.
- ▸ Never equip the appliance with an external switching device, e.g. a timer or remote control.
- ▸ When the appliance is installed, the mains plug of the power cord must be freely accessible. If free access is not possible, an all-pole isolating switch must be installed in the permanent electrical installation according to the conditions of Overvoltage Category III and according to the installation regulations.
- ▸ When installing the appliance, check that the power cable is not trapped or damaged.

19.6 General information

Follow these general instructions during the installation.
- ■ For the installation, observe the currently valid building regulations and the regulations of the local electricity and gas suppliers.
- ■ When discharging the exhaust air, the official and legal regulations, such as the regional building code., must be observed.
- ■ In order to freely access the appliance for servicing, select an easy-to-reach installation site.
- ■ The surfaces of the appliance are sensitive. Avoid damaging them during installation.

19.7 Instructions for the electrical connection

In order to safely connect the appliance to the electrical system, follow these instructions.

⚠ **WARNING – Risk of electric shock!**

It must always be possible to disconnect the appliance from the electricity supply. The appliance must only be connected to a protective contact socket that has been correctly installed.
- ▸ The mains plug for the mains power cable must be easily accessible after the appliance is installed.
- ▸ If this is not possible, an all-pole isolating switch must be integrated into the permanent electrical installation according to the conditions of overvoltage category III and according to the installation regulations.
- ▸ The permanent electrical installation must only be wired by a professional electrician. We recommend installing a residual-current circuit breaker (RCCB) in the appliance's power supply circuit.

Sharp-edged components inside the appliance may damage the connecting cable.
- ▸ Do not kink or trap the connecting cable.
- ■ The connection data can be found on the rating plate. → *Page 13*
- ■ The connecting cable is approx. 1.30 m long.
- ■ This appliance complies with the EC interference suppression regulations.
- ■ The appliance corresponds to protection class 1. You should therefore only use the appliance with a protective earth connection.
- ■ Do not connect the appliance to the power supply during installation.
- ■ Ensure that the protection against contact is guaranteed during installation.

19.8 Information on the installation situation

- ■ Install this appliance on the kitchen wall.
- ■ The appliance must be installed before the upper cabinets, if these are deeper than 370 mm.
- ■ To install additional special accessory parts, observe the enclosed installation instructions.
- ■ The width of the extractor hood must correspond at least with the width of the hob.
- ■ To optimally detect the cooking vapours, install the appliance in the middle of the hob.

19.9 Instructions for the exhaust air pipe

The appliance manufacturer does not provide any warranty for faults attributable to the pipeline.
- ■ Use a short, straight exhaust air pipe with as large a pipe diameter as possible.
- ■ Long, rough exhaust air pipes, many pipe bends or small pipe diameters reduce the suction power and increase the fan noise.
- ■ Use an exhaust pipe that is made of non-combustible material.
- ■ To prevent condensate from returning, fit the exhaust pipe with a 1° gradient from the appliance.

19.10 Instructions for the air extraction mode

For air extraction mode, a one-way flap should be installed.

Notes

- If a one-way flap is not included with the appliance, one can be ordered from a specialist retailer.
- If the exhaust air is conveyed through the external wall, a telescopic duct should be used.

19.11 Installation

Checking the wall

1. Check whether the wall is horizontal and adequately load-bearing.
   The maximum weight of the appliance is 30 kg.
2. Drill the hole depth in accordance with the length of the screws.
3. Use the enclosed screws and wall plugs.
   The enclosed screws and wall plugs are suitable for use with solid brickwork. Use suitable fixing material for other structures, e.g. plasterboard, porous concrete, poroton bricks.
4. Install the appliance with a fixing material which is sufficiently stable and has been adjusted accordingly for both the structural conditions and the weight of the appliance.
5. Check the cut-out area for existing cables of other appliances.

Preparing the wall

1. Observe the information on the installation situation.
   → *Page 19*
2. Ensure that there are no electrical wires, gas pipes or water pipes in the area where holes are to be drilled.
3. Cover the hob to prevent damage.
4. Determine the position of the extractor hood and lightly mark where the lower edge of the appliance should be on the wall.
   – Determine the centre of the hob.
   – Comply with the safety clearances for the hob.
   We recommend fitting the extractor hood in such a way that the lower edge of the glass screen is in line with the lower edges of the adjacent wall-hung cabinets.
5. To make the installation easier, apply and secure the packaging section that is used as the template to the line that is marked out.

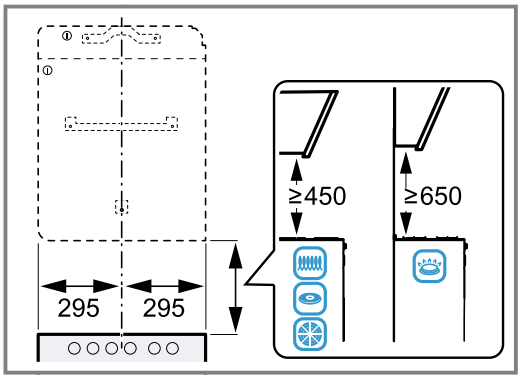

6. Mark the positions for the screws.
7. For the installation with the flue cover, separate the template along the marked cut line.
8. Place the detached part at the required position. Observe the entire length of the flue duct.
9. Drill the 8 mm diameter holes to a depth of 80 mm for the fastenings.
10. Remove the template.

Installing the appliance bracket

1. Screw on the appliance bracket for the extractor hood hand-tight.
2. Use a spirit level to align the appliance bracket horizontally and screw it firmly in place.

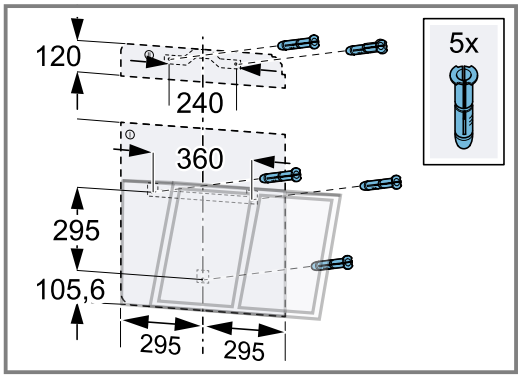

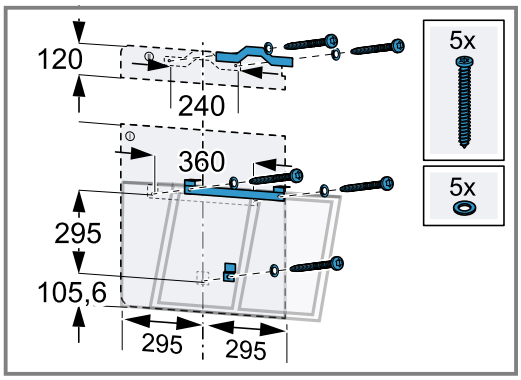

3. Screw the enclosed sleeves fully into the upper appliance bracket.

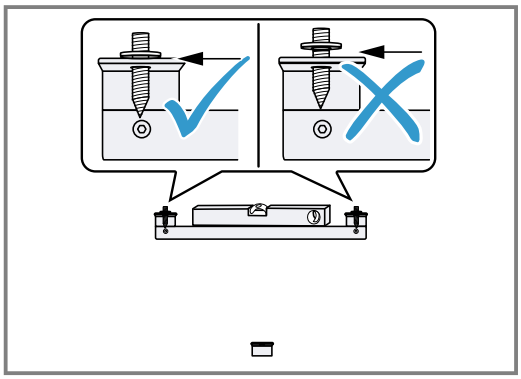

Installing the appliance

1. Place the mains plug on top of the appliance.

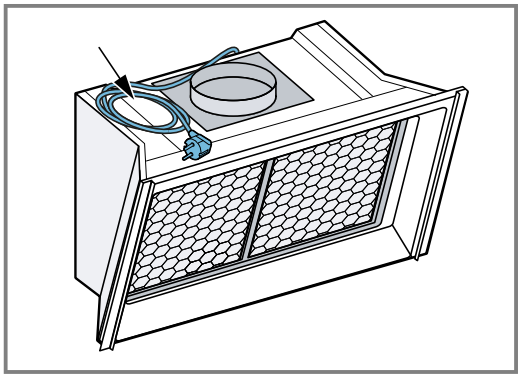

2. Remove the grease filters.

3. Hook the appliance into the appliance bracket from above so that it clicks firmly into place.

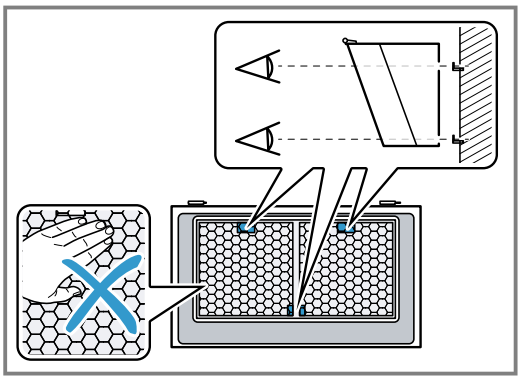

4. To align the appliance, if necessary, adjust the height of the appliance from above using a screw-driver.

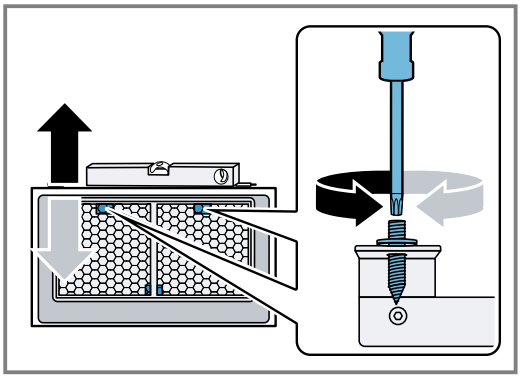

5. Secure the appliance from above using 2 nuts.

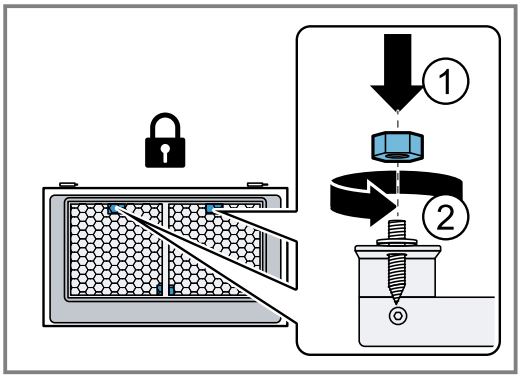

6. **Note:** Do not knock the gas pressure dampers against the painted inner frame.

   Clip the gas pressure dampers in on the left- and right-hand side of the appliance.

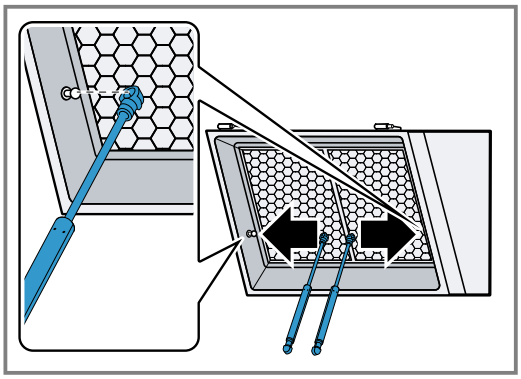

7. Fit the glass panel.
   - Hold the glass pane firmly with both hands.
   - Hook the hinge plate from right to left into the counterpart on the appliance and engage it.

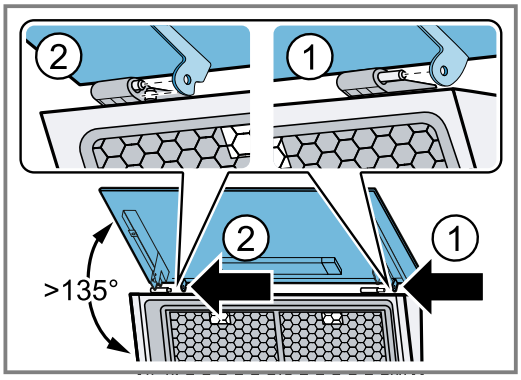

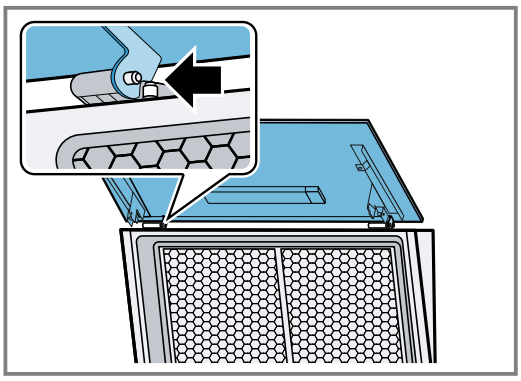

Hold the glass panel firmly until the two hinges are engaged.

8. Clip the gas pressure dampers onto the left- and right-hand side of the glass panel.

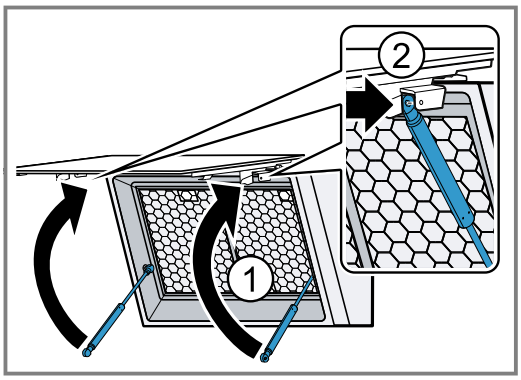

9. Insert the plug.
   – Ensure that the plug engages with a click.

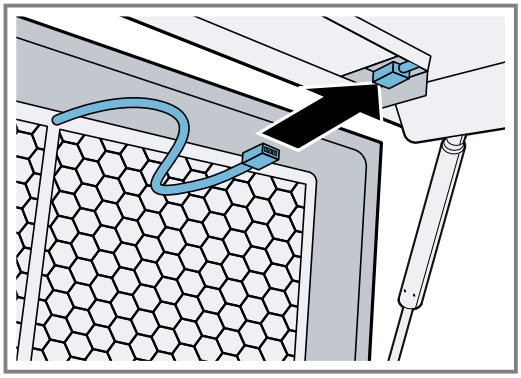

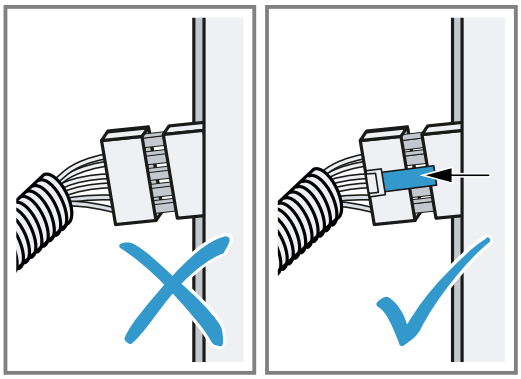

Plug connection to the glass plate

10. Insert the protective hose into the opening provided for it.

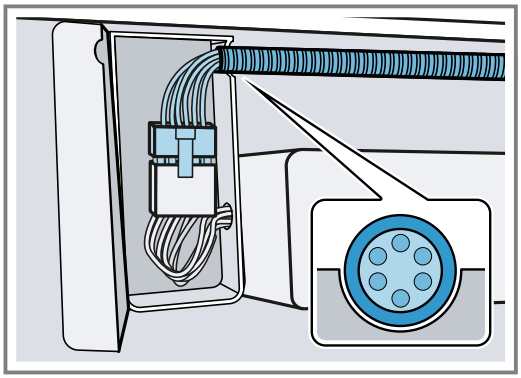

11. Insert the grease filters.

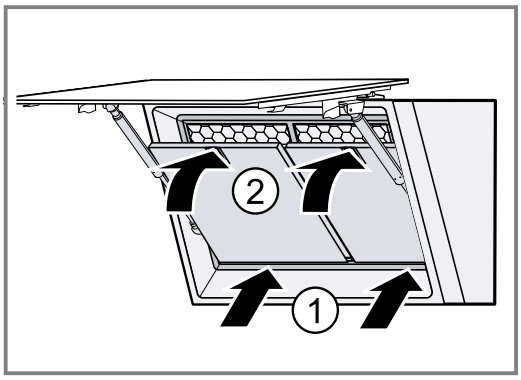

12. Connect the appliance to the power supply.

Piping

Note: If you are using an aluminium pipe, smooth the connection area beforehand.

We recommend piping with an exhaust air pipe diameter of 150 mm.
If the diameter of the air extraction ducting is less than 150 mm, you need a separately available reduction fitting.

Establishing the exhaust air connection (exhaust pipe, 150 mm diameter)

1. Secure the exhaust pipe to the air pipe connector.
2. Establish the connection to the exhaust air opening.
3. Seal the joints.

Installing the flue duct

⚠ **WARNING – Risk of injury!**
Components inside the appliance may have sharp edges.
- Wear protective gloves.

⚠ **WARNING – Risk of electric shock!**
Sharp-edged components inside the appliance may damage the connecting cable.
- Do not kink or trap the connecting cable.

1. To separate the flue ducts, remove the adhesive tape or the flue duct from the protective packaging.
2. Remove any protective foil from both flue ducts.
3. Use the 2 screws to screw the upper flue duct to the sides of the retaining bracket.

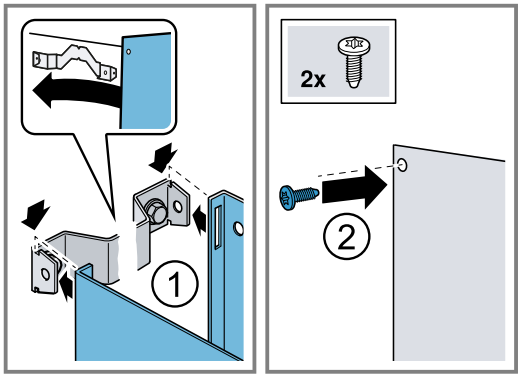

4. **Note:** To prevent scratches, lay soft towels over the edges of the outer flue duct to protect the surface.

   Place the lower flue duct on the appliance and pull it slightly apart. ①

5. Put the lower flue duct over the upper flue duct.②

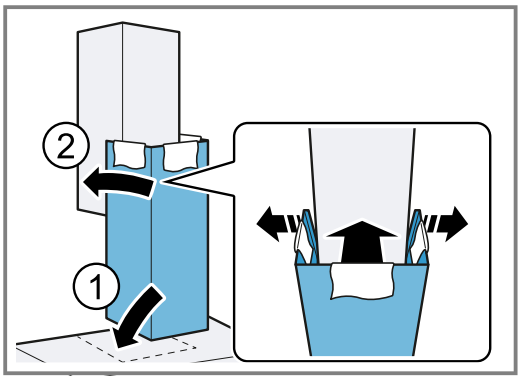

6. Carefully remove the towels.

Removing the appliance

Note: The design profiles are not hand grip elements.
Do not lift the appliance by the design profiles.

1. Remove the design profiles.
2. Undo the upper 2 nuts on the appliance bracket.
3. Remove the appliance from the wall.

Thank you for buying a Bosch Home Appliance!

Register your new device on MyBosch now and profit directly from:

- **Expert tips & tricks for your appliance**
- **Warranty extension options**
- **Discounts for accessories & spare-parts**
- **Digital manual and all appliance data at hand**
- **Easy access to Bosch Home Appliances Service**

Free and easy registration – also on mobile phones:
www.bosch-home.com/welcome

Looking for help? You'll find it here.

Expert advice for your Bosch home appliances, help with problems or a repair from Bosch experts.
Find out everything about the many ways Bosch can support you:
www.bosch-home.com/service
Contact data of all countries are listed in the attached service directory.

BSH Hausgeräte GmbH
Carl-Wery-Straße 34
81739 München, GERMANY
www.bosch-home.com

A Bosch Company

9001743822 (040212)
en

Valid within Great Britain:
Imported to Great Britain by
BSH Home Appliances Ltd.
Grand Union House
Old Wolverton Road
Wolverton, Milton Keynes
MK12 5PT
United Kingdom