Dell PowerEdge R470

Installation and Service Manual

Regulatory Model: E108S
Regulatory Type: E108S001
December 2025
Rev. A03

DELL Technologies

Notes, cautions, and warnings

NOTE: A NOTE indicates important information that helps you make better use of your product.

CAUTION: A CAUTION indicates either potential damage to hardware or loss of data and tells you how to avoid the problem.

WARNING: A WARNING indicates a potential for property damage, personal injury, or death.

Copyright © 2024 Dell Inc. All Rights Reserved. Dell Technologies, Dell, and other trademarks are trademarks of Dell Inc. or its subsidiaries. Other trademarks may be trademarks of their respective owners.

Contents

Chapter 1: Introduction **8**

Chapter 2: PowerEdge R470 system configurations and features **9**
System configurations - front view for PowerEdge R470 system 10
Left Control Panel (LCP)- Secondary view 14
Right Control Panel (RCP) - Primary view 16
System configurations - rear view for PowerEdge R470 system 17
System configurations - inside view for PowerEdge R470 system 21
Locating the Express Service Code and Service Tag 22
System information label 23
Rail sizing and rack compatibility matrix 26

Chapter 3: Technical specifications **27**
Chassis dimensions 28
System weight 29
Processor specifications 29
PSU specifications 29
Cooling fan specifications 31
Supported operating systems 32
System battery specifications 32
Expansion card riser specifications 32
Memory specifications 33
Storage controller specifications 33
Drives 34
GPU Specifications 34
DPU Specifications 34
Ports and connectors specifications 35
NIC port specifications 35
USB ports specifications 35
Serial connector specifications 35
Video ports specifications 35
Video specifications 35
Environmental specifications 36
Particulate and gaseous contamination specifications 37
Thermal restriction matrix 38
Thermal air restrictions 41

Chapter 4: Initial system setup and configuration **43**
Setting up the system 43
iDRAC configuration 43
Options to set up iDRAC IP address 43
Options to log in to iDRAC 44
Resources to install operating system 44
Options to download drivers and firmware 45

Options to download and install OS drivers 45
Downloading drivers and firmware....45

Chapter 5: Pre-operating system management applications.... 47
System Setup.... 47
System BIOS....48
iDRAC Settings.... 48
Device Settings....48
Boot Manager....48
PXE boot.... 48

Chapter 6: Minimum to POST and system management configuration validation.... 49
Minimum configuration to POST 49

Chapter 7: Configuration validation....50

Chapter 8: Disassembly and reassembly....51
Safety instructions....51
Before working inside your system 52
After working inside your system....52
Recommended tools....53
Optional front bezel....53
Removing the front bezel....53
Installing the front bezel....54
System cover.... 54
Removing the system cover.... 54
Installing the system cover.... 55
Air shroud....56
Removing the air shroud....56
Installing the air shroud....57
Cooling fans....58
Removing a cooling fan....58
Installing a cooling fan....59
Drive backplane cover....60
Removing the drive backplane cover.... 60
Installing the drive backplane cover.... 61
Drives.... 62
Removing an EDSFF E3.S drive blank.... 62
Installing an EDSFF E3.S drive blank.... 63
Removing an EDSFF E3.S drive carrier....64
Removing an EDSFF E3.S drive from the drive carrier....64
Installing an EDSFF E3.S drive into the drive carrier....65
Installing an EDSFF E3.S drive carrier....66
Removing a 2.5-inch drive blank....67
Installing a 2.5-inch drive blank....68
Removing a 2.5-inch drive carrier.... 68
Removing a 2.5-inch drive from the drive carrier.... 69
Installing a 2.5-inch drive into the drive carrier.... 70
Installing a 2.5-inch drive carrier.... 71

Removing a 3.5-inch drive blank....72
Installing a 3.5-inch drive blank....73
Removing a 3.5-inch drive carrier....73
Removing a 3.5-inch drive from the drive carrier....74
Installing a 3.5-inch drive into the drive carrier....75
Installing a 3.5-inch drive carrier....76
Rear Drives....77
Removing the rear 2 x EDSFF E3.S module....77
Installing the rear 2 x EDSFF E3.S module....78
Drive backplane....79
Drive backplane....79
Removing the 2.5-inch drive backplane module....80
Installing the 2.5-inch drive backplane module....81
Removing the EDSFF E3.S backplane module....82
Installing the EDSFF E3.S backplane module....83
Side wall brackets....84
Removing the side wall bracket....84
Installing the side wall bracket....85
Middle bracket....86
Removing the cables from the middle bracket....86
Installing the cables into the middle bracket....87
Cable routing....88
System memory....105
System memory guidelines....105
General memory module installation guidelines....107
Removing a memory module....108
Installing a memory module....109
Processor and heat sink....110
Removing the processor and heat sink module....110
Removing the processor....112
Installing the processor....114
Installing the processor and heat sink module....117
PERC cards....119
Removing the fPerc module....119
Installing the fPerc module....120
Expansion cards and expansion card risers....121
Expansion card installation guidelines....122
Removing the rear expansion card risers....132
Installing the rear expansion card risers....134
Removing an expansion card from the expansion card riser....137
Installing an expansion card into the expansion card riser....142
Removing the rear expansion card riser blank....148
Installing the rear expansion card riser blank....149
M.2 SSD module....150
Removing the M.2 NVMe SSD module from the M.2 Interposer board....150
Installing the M.2 NVMe SSD module in the M.2 Interposer board....151
Removing the M.2 NVMe SSD module....155
Installing the M.2 NVMe SSD module....157
Optional M.2 Interposer board....159
Removing the M.2 Interposer board....159

Installing the M.2 Interposer board....161
Optional BOSS-N1 DC-MHS module....166
Removing the BOSS-N1 DC-MHS card carrier blank....166
Installing the BOSS-N1 DC-MHS card carrier blank....166
Removing the front BOSS-N1 DC-MHS module....167
Installing the front BOSS-N1 DC-MHS module....169
Removing the rear BOSS-N1 DC-MHS module....172
Installing the rear BOSS-N1 DC-MHS module....173
Optional OCP NIC card....175
Removing the front OCP NIC card....175
Installing the front OCP NIC card....177
Removing the front OCP NIC cage....178
Installing the front OCP NIC cage....180
Removing the rear OCP NIC card....181
Installing the rear OCP NIC card....183
Datacenter-Secure Control Module (DC-SCM)....184
Removing the DC-SCM board....184
Installing the DC-SCM board....185
Restoring the system using Easy Restore....186
Manually update the Service Tag....187
Attic board....187
Removing the Attic board....188
Installing the Attic board....188
Internal USB....189
Removing the internal USB....189
Installing the Internal USB....190
System battery....191
Replacing the system battery....191
Intrusion switch....193
Removing the intrusion switch module....193
Installing the intrusion switch module....194
Power supply unit....195
Removing a power supply unit....195
Installing a power supply unit....196
Removing a power supply unit blank....197
Installing a power supply unit blank....197
DB9+RJ45 module....198
Removing the DB9+RJ45 module....198
Installing the DB9+RJ45 module....199
Trusted Platform Module....200
Initializing TPM 2.0 for users....200
HPM board....201
Removing the HPM board....201
Installing the HPM board....202
Control panel....203
Removing the Right Control Panel (RCP) - Primary....203
Installing the Right Control Panel (RCP) - Primary....204
Removing the Left Control Panel (LCP)- Secondary KVM/Quick Sync....205
Installing the Left Control Panel (LCP)- Secondary KVM/Quick Sync....206

Chapter 9: Upgrade Kits **209**
Processor upgrade kit components 209
Processor upgrade guidelines 210
BOSS-N1 DCHMS module kit 211
M.2 Interposer kit 211
PERC module kit 212

Chapter 10: System diagnostics and indicator codes **217**
Power LED indicators 217
System health and system ID indicator codes 218
iDRAC Direct LED indicator codes 218
iDRAC Quick Sync 2 indicator codes 219
NIC indicator codes 219
Power supply unit indicator codes 220
Drive indicator codes 221
Using system diagnostics 223
Dell Embedded System Diagnostics 223

Chapter 11: Jumpers and connectors **224**
HPM board jumpers and connectors 224
HPM board jumper settings 226
Disabling a forgotten password 226

Chapter 12: Getting Help **228**
Recycling or End-of-Life service information 228
Contact Dell Technologies 228
Accessing system information by using MyDell 228
Receiving automated support with Secure Connect Gateway (SCG) 229

Chapter 13: Documentation resources **230**

1

Introduction

This document provides a system overview, information about installing and replacing components, diagnostic tools, and guidelines for installing certain components.

Recycling or End-of-Life service information

Take back and recycling services are offered for this product in certain countries. If you want to dispose of system components, go to How to Recycle and select the relevant country or region.

Automated support with secure connect gateway

Secure connect gateway is an optional Services offering that automates technical support for your server, storage, and networking devices. A secure connect gateway in your IT environment provides the following benefits:

- Automated issue detection: Monitors your devices and detects hardware issues.
- Automated case creation: Detects issues and opens a support case with Technical Support.
- Automated diagnostic collection: Collects system state information and uploads it securely to Dell Support. This information is used by Technical Support to troubleshoot the issue.
- Proactive contact: Technical Support agents contacts you about the support case.

The available benefits vary depending on the Service entitlement that is purchased for your device. For more information about secure connect gateway, go to secureconnectgateway.

2

PowerEdge R470 system configurations and features

The PowerEdge R470 system is a 1U server that supports:

- One Intel® Xeon 6 processor E- core with up to 144 cores or One Intel® Xeon 6 processor P- core with up to 86 Cores with R1S option.
- 16 DIMM slots
- Two redundant AC or DC power supply units
- Up to 16 x EDSFF E3.S Gen5 NVMe front drives or Up to 8 x EDSFF E3.S Gen5 NVMe front drives or Up to 10 x 2.5-inch SATA or Up to 8 x 2.5-inch SATA front drives or Up to 8 x 2.5-inch NVMe front drives or Up to 4 x 3.5 - inch SATA front drives with Up to 2 x EDSFF E3.S Gen5 NVMe rear drives.

NOTE: For more information about how to hot swap NVMe PCIe SSD device, see the *Dell Express Flash NVMe PCIe SSD User's Guide* at Dell Support page **> Browse all products** > **Infrastructure** > **Data Center Infrastructure** > **Storage Adapters & Controllers** > **Dell PowerEdge Express Flash NVMe PCIe SSD** > **Select This Product** > **Documentation** > **Manuals and Documents**.

NOTE: All instances of SATA drives are referred to as drives in this document, unless specified otherwise.

CAUTION: Do not install GPUs, network cards, or other PCIe devices on your system that are not validated and tested by Dell. Damage caused by unauthorized and invalidated hardware installation will null and void the system warranty.

NOTE: This document provides a comprehensive list of product features. However, features marked with an asterisk (*) may not be available at launch but introduced in future updates. Please note that this document does not confirm the availability or release timeline of any feature. For the most accurate and up-to-date information on feature availability, please refer to the product configurator page on dell.com.

Topics:

- System configurations - front view for PowerEdge R470 system
- System configurations - rear view for PowerEdge R470 system
- System configurations - inside view for PowerEdge R470 system
- Locating the Express Service Code and Service Tag
- System information label
- Rail sizing and rack compatibility matrix

System configurations - front view for PowerEdge R470 system

Front views of R470

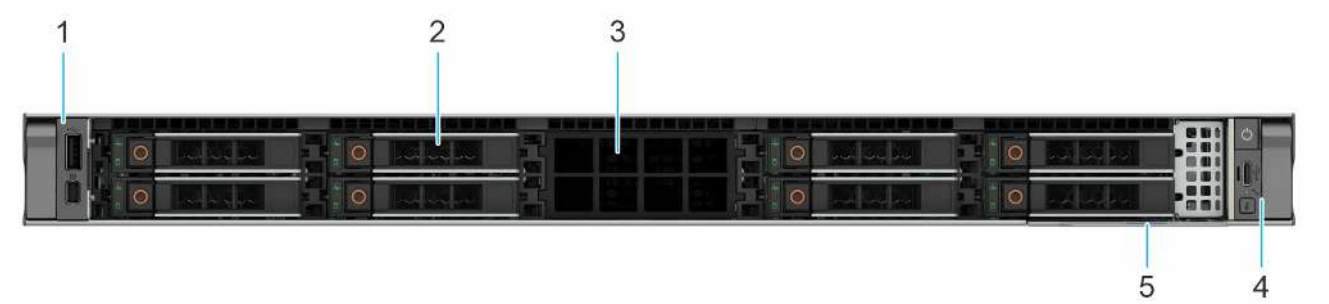

Figure 1. Front view of 8 x 2.5 inch -drive system

Table 1. The table shows the list of components in front view of the system.

Item	Ports, panels, and slots	Icon	Description
1	Left control panel (LCP) - Secondary	N/A	Contains the USB port and Mini-Displayport. **NOTE:** LCP - Secondary KVM module is optional, and LCP blank is default in the left control panel.
2	2.5-inch drives	N/A	Enables you to install drives that are supported on your system.
3	Drive blank	Blank	Blank filler for the storage drive slot
4	Right control panel (RCP) - Primary	N/A	Contains the system health LED, system ID, power button, Type-C USB port, and the host status LED.
5	Express Service Tag	N/A	The Express Service Tag is a slide-out label panel that contains system information such as Service Tag, NIC, MAC address

Figure 2. Front view of 8 x EDSFF E3.S -drive system with front I/O

Table 2. The table shows the list of components in front view of the system.

Item	Ports, panels, and slots	Icon	Description
1	Left control panel (LCP) - Secondary	N/A	Contains the USB port and Mini-Displayport. **NOTE:** LCP - Secondary KVM module is optional, and LCP blank is default in the left control panel.
2	OCP NIC (Primar/Secondary) **NOTE:** Primary OCP is on slot 32 at the bottom	N/A	Enables you to install Primary/secondary OCP based on riser configurations on slots 31/32
3	EDSFF E3.S drives	N/A	Enables you to install drives that are supported on your system.
4	Right control panel (RCP) - Primary	N/A	Contains the system health LED, system ID, power button, Type-C USB port, and the host status LED.
5	Dedicated iDRAC Ethernet port	N/A	Enables you to access iDRAC.
6	Serial COM port	IOIOI	Enables you to connect a serial device to the system.
7	BOSS-N1 DC-MHS module	N/A	BOSS module for internal system boot.
8	Express Service Tag	N/A	The Express Service Tag is a slide-out label panel that contains system information such as Service Tag, NIC, MAC address

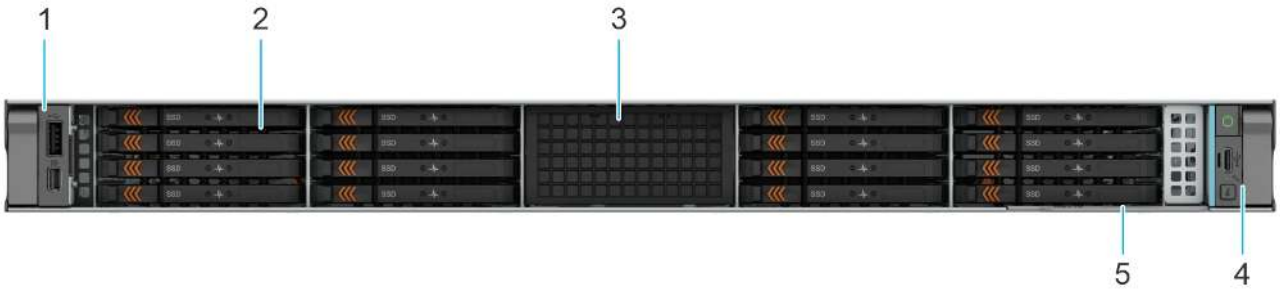

Figure 3. Front view of 16 x EDSFF E3.S -drive system with front I/O

Table 3. The table shows the list of components in front view of the system.

Item	Ports, panels, and slots	Icon	Description
1	Left control panel (LCP) - Secondary	N/A	Contains the USB port and Mini-Displayport. **NOTE:** LCP - Secondary KVM module is optional, and LCP blank is default in the left control panel.

Table 3. The table shows the list of components in front view of the system. (continued)

Item	Ports, panels, and slots	Icon	Description
2	EDSFF E3.S drives	N/A	Enables you to install drives that are supported on your system.
3	Drive blank	Blank	Blank filler for the storage drive slot
4	Right control panel (RCP) - Primary	N/A	Contains the system health LED, system ID, power button, Type-C USB port, and the host status LED.
5	Express Service Tag	N/A	The Express Service Tag is a slide-out label panel that contains system information such as Service Tag, NIC, MAC address

Figure 4. Front view of 8 x EDSFF E3.S -drive system with rear I/O

Table 4. The table shows the list of components in front view of the system.

Item	Ports, panels, and slots	Icon	Description
1	Left control panel (LCP) - Secondary	N/A	Contains the USB port and Mini-Displayport. **NOTE:** LCP - Secondary KVM module is optional, and LCP blank is default in the left control panel.
2	PCIe blank	N/A	Blank filler for the PCIe expansion riser slot
3	EDSFF E3.S drives	N/A	Enables you to install drives that are supported on your system.
4	Right control panel (RCP) - Primary	N/A	Contains the system health LED, system ID, power button, Type-C USB port, and the host status LED.
5	Blank	N/A	Blank filler for the DB9 slot
6	PCIe blank	N/A	Blank filler for the PCIe expansion riser slot

Figure 5. Front view of 10 x 2.5 inch -drive system with rear I/O

Table 5. The table shows the list of components in front view of the system.

Item	Ports, panels, and slots	Icon	Description
1	Left control panel (LCP) - Secondary	N/A	Contains the USB port and Mini-Displayport. **NOTE:** LCP - Secondary KVM module is optional, and LCP blank is default in the left control panel.
2	2.5-inch drives	N/A	Enables you to install drives that are supported on your system.
3	Right control panel (RCP) - Primary	N/A	Contains the system health LED, system ID, power button, Type-C USB port, and the host status LED.
4	Express Service Tag	N/A	The Express Service Tag is a slide-out label panel that contains system information such as Service Tag, NIC, MAC address

Figure 6. Front view of 4 x 3.5 inch -drive system with rear I/O

Table 6. The table shows the list of components in front view of the system.

Item	Ports, panels, and slots	Icon	Description
1	Left control panel (LCP) - Secondary	N/A	Contains the USB port and Mini-Displayport. **NOTE:** LCP - Secondary KVM module is optional, and LCP blank is default in the left control panel.

Table 6. The table shows the list of components in front view of the system. (continued)

Item	Ports, panels, and slots	Icon	Description
2	3.5-inch drives	N/A	Enables you to install drives that are supported on your system.
3	Right control panel (RCP) - Primary	N/A	Contains the system health LED, system ID, power button, Type-C USB port, and the host status LED.
4	Express Service Tag	N/A	The Express Service Tag is a slide-out label panel that contains system information such as Service Tag, NIC, MAC address

Figure 7. Front view of no backplane configuration system

Table 7. The table shows the list of components in front view of the system.

Item	Ports, panels, and slots	Icon	Description
1	Left control panel (LCP) - Secondary	N/A	Contains the USB port and Mini-Displayport. **NOTE:** LCP - Secondary KVM module is optional, and LCP blank is default in the left control panel.
2	Drive blank	Blank	Blank filler for the storage drive slot
3	Right control panel (RCP) - Primary	N/A	Contains the system health LED, system ID, power button, Type-C USB port, and the host status LED.
4	Express Service Tag	N/A	The Express Service Tag is a slide-out label panel that contains system information such as Service Tag, NIC, MAC address

Left Control Panel (LCP)- Secondary view

The R470 system has three options for Left Control Panel (LCP)- Secondary panel as shown below. The default option is the blank.

Figure 8. Left Control Panel (LCP)- Secondary panel - blank module

Figure 9. Left Control Panel (LCP)- Secondary panel - KVM module

Table 8. Left Control Panel (LCP)- Secondary panel - KVM module (optional)

Item	Indicator, button, or connector	Icon	Description
1	USB 2.0-compliant port		The USB port is 4-pin, 2.0-compliant. This port enables you to connect USB devices to the system.
2	Mini-Displayport		Enables you to connect a display device to the system.

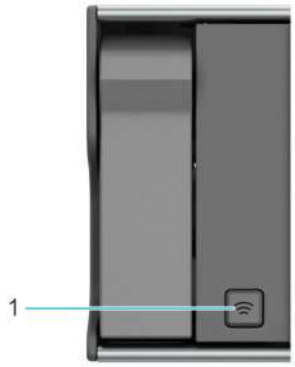

Figure 10. Left Control Panel (LCP) - Secondary panel - Quick Sync 2.0 (optional)

1. Quick Sync 2.0 button

Right Control Panel (RCP) - Primary view

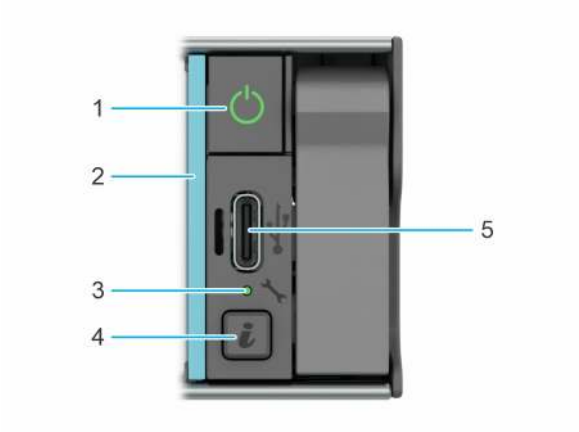

Figure 11. Right Control Panel (RCP) - Primary

Table 9. Right Control Panel (RCP) - Primary

Item	Indicator or button	Icon	Description
1	Power button	⏻	Indicates if the system is powered on or off. Press the power button to manually power on or off the system **NOTE:** Press the power button to gracefully shut down an ACPI-compliant operating system.
2	System health and System ID indicator	N/A	Indicates the status of the system.
3	iDRAC Direct LED indicator		The iDRAC Direct LED indicator lights up to indicate that the iDRAC Direct port is actively connected to a device.
4	System ID button		System ID allows user to physically locate the system..
5	Host/iDRAC Direct port (Type - C USB)		The iDRAC Direct port (Type - C USB) enables you to access the iDRAC direct Type - C USB features. For more information, see the iDRAC manuals. **NOTE:** You can configure iDRAC Direct by using a USB to Type - C USB cable, which you can connect to your laptop or tablet. Cable length should not exceed 3 feet (0.91 meters). Performance could be affected by cable quality.

Table 10. System health and system ID indicator codes

System health and system ID indicator code	Condition
Solid blue	Indicates that the system is powered on, is healthy, and system ID mode is not active. Press the system ID button to switch to system ID mode.
Blinking blue	Indicates that the system ID mode is active. Press the system ID button to switch to system health mode.
Blinking amber	Indicates that the system is experiencing a fault. Check the System Event Log for specific error messages. PowerEdge Manulas.

System configurations - rear view for PowerEdge R470 system

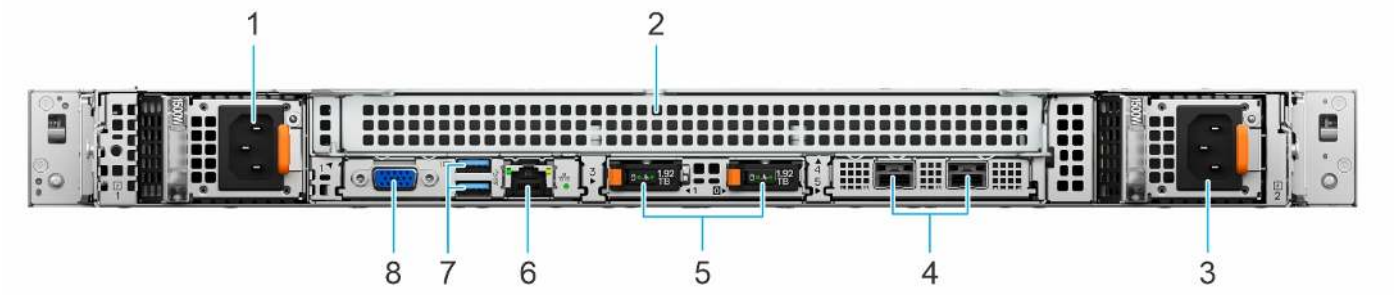

Figure 12. Rear view of the system with 8 x 2.5 inch drive system

Right Control Panel (RCP) - Primary

Table 11. Rear view of the system with 8 x 2.5-inch drive system

Item	Ports, panels, or slots	Icon	Description
1	Power supply unit (PSU1)	1	PSU1 is the primary PSU of the system.
2	PCIe expansion card riser blank	N/A	Blank filler for the PCIe expansion riser slot
3	Power supply unit (PSU2)	2	PSU2 is the secondary PSU of the system.
4	OCP NIC card	N/A	The OCP NIC card supports OCP 3.0. The NIC ports are integrated on the OCP card which is connected to the HPM board.
5	BOSS-N1 DC-MHS module	N/A	BOSS module for internal system boot.
6	iDRAC dedicated port		Enables you to remotely access iDRAC. when the front iDRAC port is connected with the network, the rear iDRAC port is auto disabled.
7	USB 3.0 port		The USB port is 9-pin and 3.0-compliant. This port enables you to connect USB devices to the system.
8	VGA port		Enables you to connect a display device to the system.

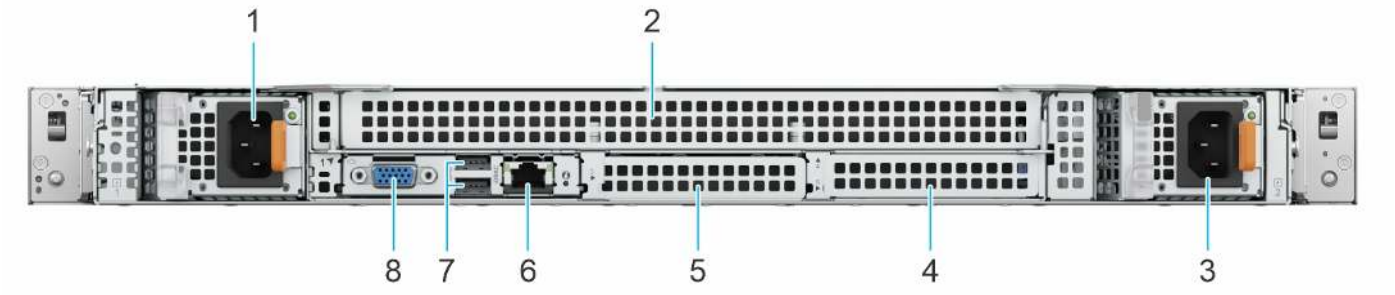

Figure 13. Rear view of the system with 8 x EDSFF E3.S drive system with front I/O

Table 12. Rear view of the system with 8 x EDSFF E3.S drive system with front I/O

Item	Ports, panels, or slots	Icon	Description
1	Power supply unit (PSU1)	1	PSU1 is the primary PSU of the system.

Table 12. Rear view of the system with 8 x EDSFF E3.S drive system with front I/O (continued)

Item	Ports, panels, or slots	Icon	Description
2	PCIe expansion card riser blank	N/A	Blank filler for the PCIe expansion riser slot.
3	Power supply unit (PSU2)	2	PSU2 is the secondary PSU of the system.
4	OCP blank	N/A	Blank filler for the OCP card slot.
5	BOSS-N1 blank	N/A	Blank filler for the BOSS-N1 module slot.
6	iDRAC dedicated port		Enables you to remotely access iDRAC. when the front iDRAC port is connected with the network, the rear iDRAC port is auto disabled.
7	USB 3.0 port		The USB port is 9-pin and 3.0-compliant. This port enables you to connect USB devices to the system.
8	VGA port		Enables you to connect a display device to the system.

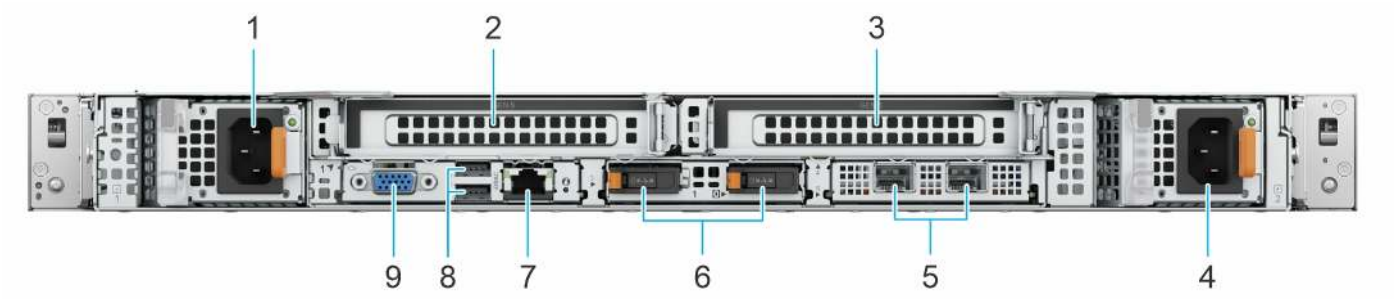

Figure 14. Rear view of the system with 8 x EDSFF E3.S drive system with rear I/O

Table 13. Rear view of the system with 8 x EDSFF E3.S drive system with rear I/O

Item	Ports, panels, or slots	Icon	Description
1	Power supply unit (PSU1)	1	PSU1 is the primary PSU of the system.
2	PCIe expansion card riser blank	N/A	Blank filler for the PCIe expansion riser slot.
3	PCIe expansion card riser blank	N/A	Blank filler for the PCIe expansion riser slot.
4	Power supply unit (PSU2)	2	PSU2 is the secondary PSU of the system.
5	OCP NIC card	N/A	The OCP NIC card supports OCP 3.0. The NIC ports are integrated on the OCP card which is connected to the HPM board.
6	BOSS-N1 DC-MHS module	N/A	BOSS module for internal system boot.
7	iDRAC dedicated port		Enables you to remotely access iDRAC. when the front iDRAC port is connected with the network, the rear iDRAC port is auto disabled.
8	USB 3.0 port		The USB port is 9-pin and 3.0-compliant. This port enables you to connect USB devices to the system.
9	VGA port		Enables you to connect a display device to the system.

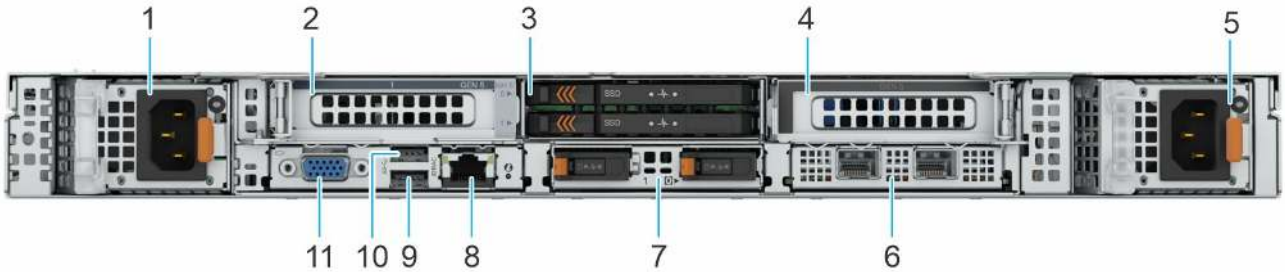

Figure 15. Rear view of the system with 4 x 3.5-inch drive system with rear 2 x EDSFF E3.S drives

Table 14. Rear view of the system with 4 x 3.5-inch drive system with rear 2 x EDSFF E3.S drives

Item	Ports, panels, or slots	Icon	Description
1	Power supply unit (PSU1)	1	PSU1 is the primary PSU of the system.
2	PCIe expansion card riser blank	N/A	Blank filler for the PCIe expansion riser slot.
3	EDSFF E3.S drives	N/A	Enables you to install drives that are supported on your system.
4	PCIe expansion card riser blank	N/A	Blank filler for the PCIe expansion riser slot.
5	Power supply unit (PSU2)	2	PSU2 is the secondary PSU of the system.
6	OCP NIC card	N/A	The OCP NIC card supports OCP 3.0. The NIC ports are integrated on the OCP card which is connected to the HPM board.
7	BOSS-N1 DC-MHS module	N/A	BOSS module for internal system boot.
8	iDRAC dedicated port		Enables you to remotely access iDRAC. when the front iDRAC port is connected with the network, the rear iDRAC port is auto disabled.
9	USB 3.0 port		The USB port is 9-pin and 3.0-compliant. This port enables you to connect USB devices to the system.
10	USB 3.0 port		The USB port is 9-pin and 3.0-compliant. This port enables you to connect USB devices to the system.
11	VGA port		Enables you to connect a display device to the system.

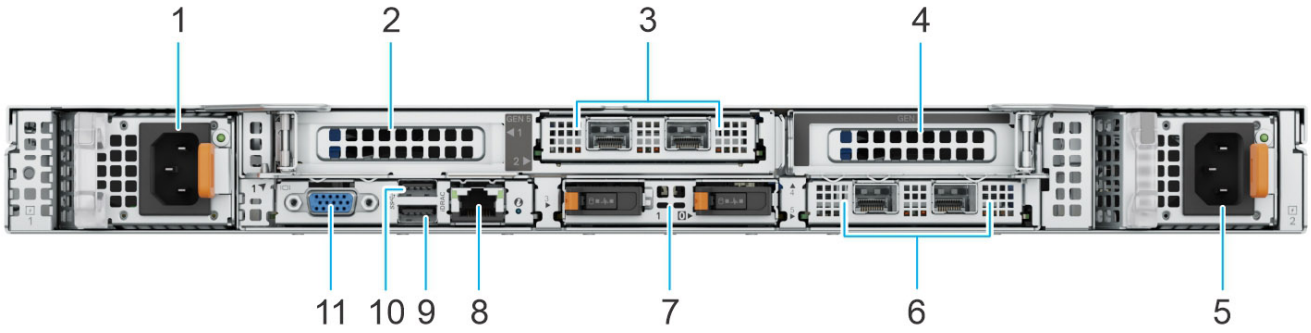

Figure 16. Rear view of the no backplane configuration system *

Table 15. Rear view of the no backplane configuration system

Item	Ports, panels, or slots	Icon	Description
1	Power supply unit (PSU1)	1	PSU1 is the primary PSU of the system.
2	PCIe expansion card riser blank	N/A	Blank filler for the PCIe expansion riser slot.
3	PCIe expansion card riser OCP	N/A	PCIe expansion card riser OCP.
4	PCIe expansion card riser blank	N/A	Blank filler for the PCIe expansion riser slot.
5	Power supply unit (PSU2)	2	PSU2 is the secondary PSU of the system.
6	OCP NIC card	N/A	The OCP NIC card supports OCP 3.0. The NIC ports are integrated on the OCP card which is connected to the HPM board.
7	BOSS-N1 DC-MHS module	N/A	BOSS module for internal system boot.
8	iDRAC dedicated port		Enables you to remotely access iDRAC. when the front iDRAC port is connected with the network, the rear iDRAC port is auto disabled.
9	USB 3.0 port		The USB port is 9-pin and 3.0-compliant. This port enables you to connect USB devices to the system.
10	USB 3.0 port		The USB port is 9-pin and 3.0-compliant. This port enables you to connect USB devices to the system.
11	VGA port		Enables you to connect a display device to the system.

System configurations - inside view for PowerEdge R470 system

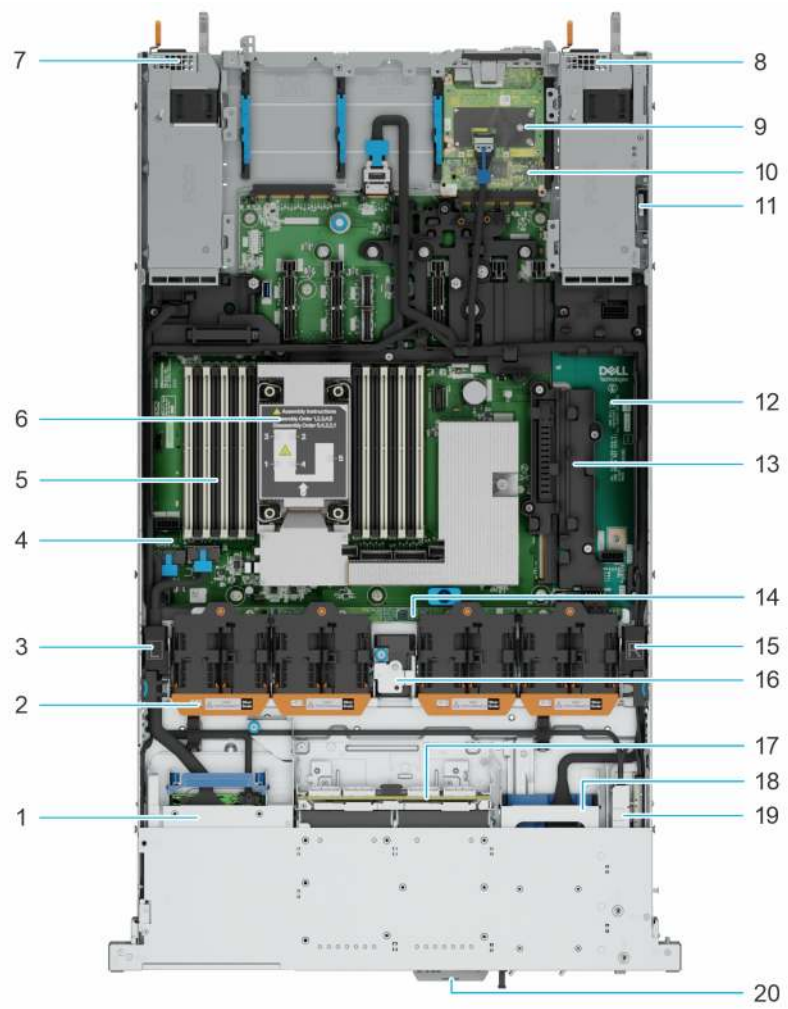

Figure 17. Inside the system with front I/O configuration

1. Front OCP
2. Cooling fan
3. Cable clip
4. Host Processor Module (HPM)
5. DIMM slots
6. Processor heatsink (remote)
7. PSU 2
8. PSU 1
9. Attic board
10. DC-SCM module
11. Intrusion switch
12. Power interposer board (PIB)
13. PIB bracket
14. Fan board
15. Cable clip
16. Middle cable bracket
17. Drive backplane
18. Front BOSS-N1
19. Front serial port and dedicated iDRAC port
20. Express Service Tag

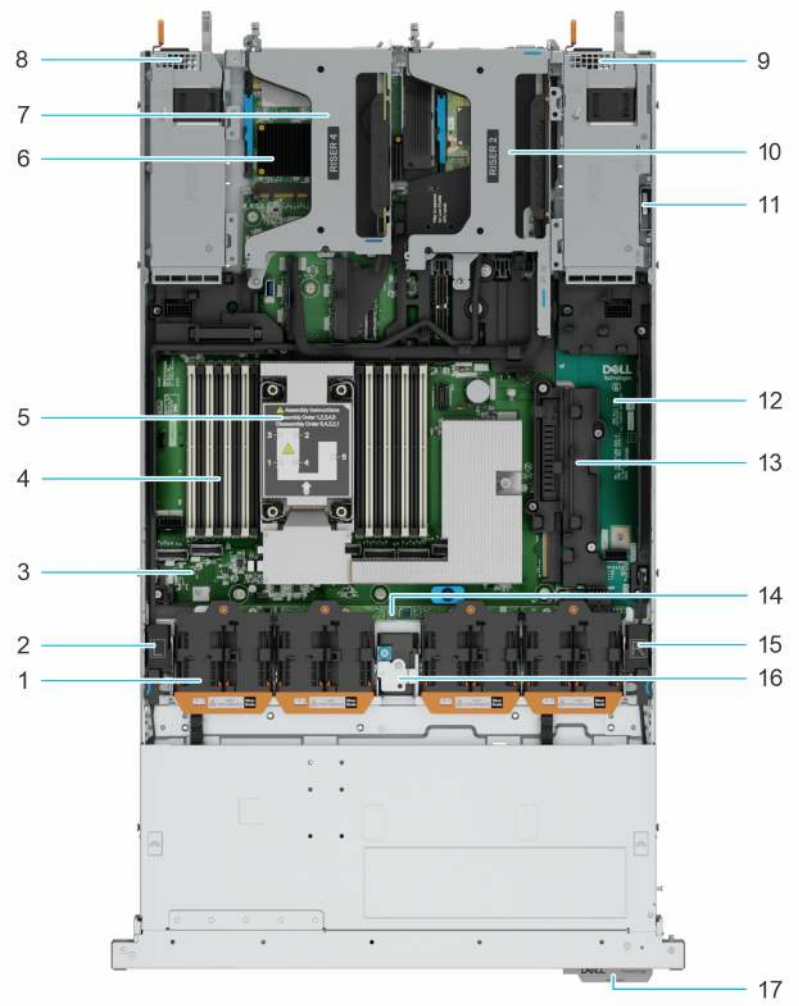

Figure 18. Inside the system with rear I/O configuration

1. Cooling fan
2. Cable clip
3. Host Processor Module (HPM)
4. DIMM slots
5. Processor heatsink (remote)
6. Rear OCP module
7. PCIe riser 4
8. PSU 2
9. PSU 1
10. PCIe riser 2
11. Intrusion switch
12. Power interposer board (PIB)
13. PIB bracket
14. Fan board
15. Cable clip
16. Middle cable bracket
17. Express Service Tag

Locating the Express Service Code and Service Tag

The unique Express Service Code and Service Tag are used to identify the system.

The information tag is on the front of the system that includes system information such as the Service Tag, Express Service Code, Manufacture date, NIC, MAC address, QRL label, and so on.

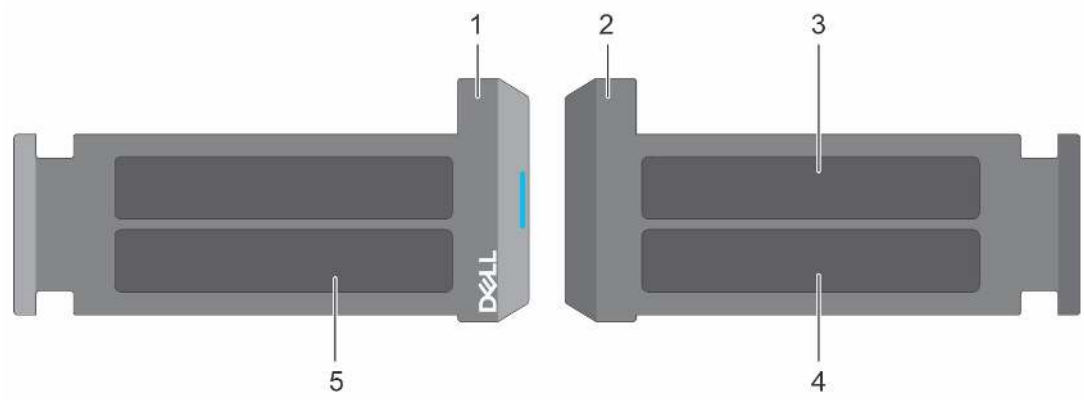

Figure 19. Locating the Express Service Code and Service tag

1. Express Service Tag (front view)
2. Express Service Tag (rear view)
3. OMM (not applicable)
4. Password MAC address
5. Service Tag, Express Service Code, My Dell QRL label

System information label

The system information label is located on the back side of the system cover and/or on the top of the system.

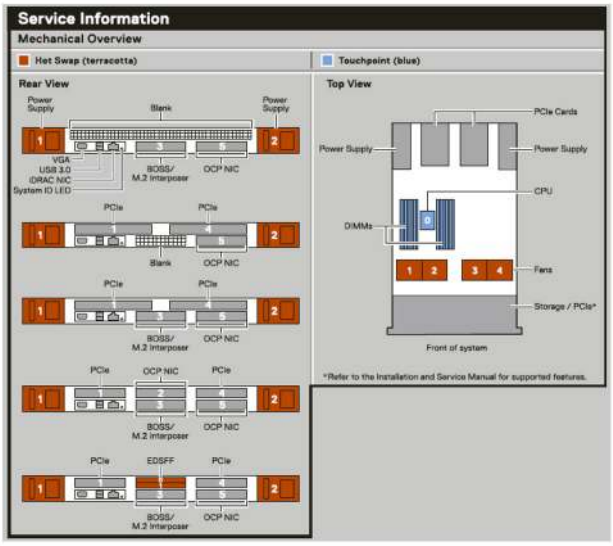

Figure 20. Mechanical overview

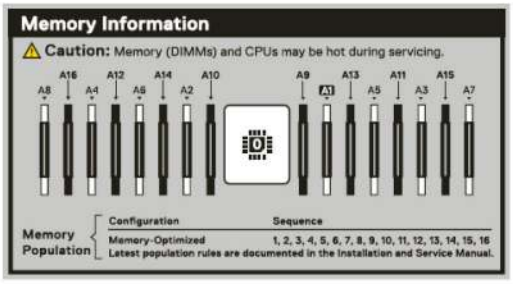

Figure 21. Memory information

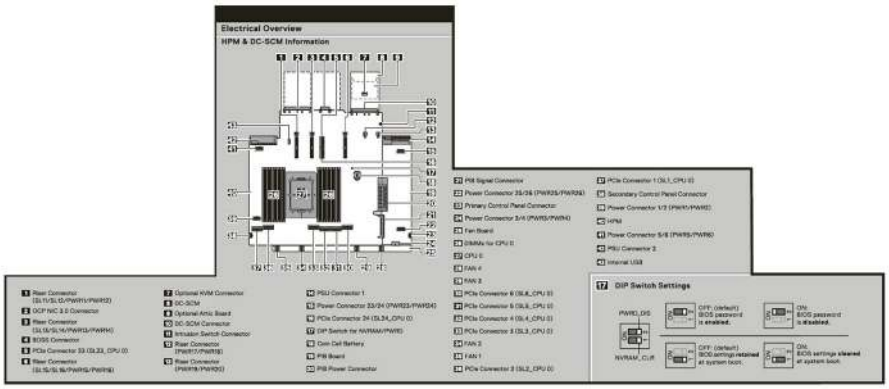

Figure 22. Electrical overview

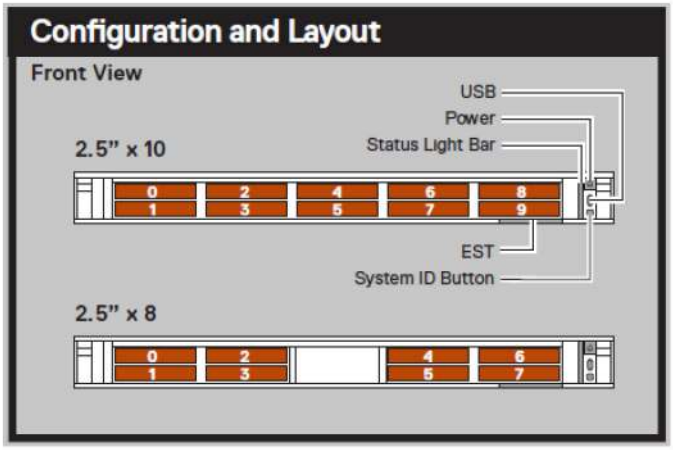

Figure 23. Configuration and Layout 8 x 2.5 inch drives

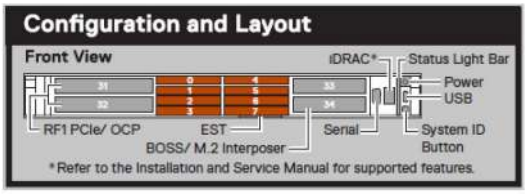

Figure 24. Configuration and Layout 8 x E3.s drives

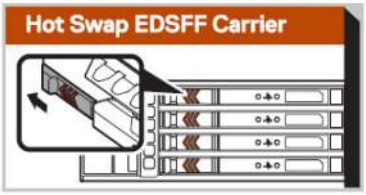

Figure 25. Hot swap EDSFF carrier

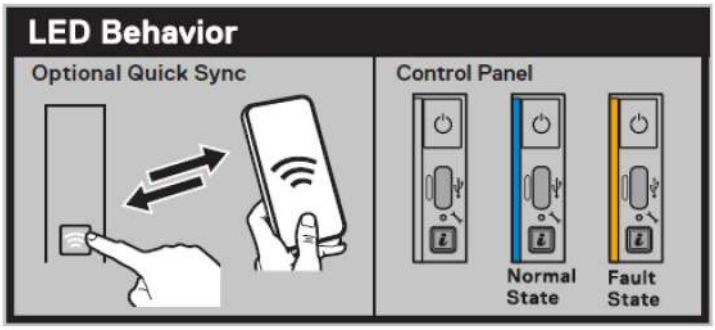

Figure 26. LED behavior 8 x 2.5 inch drives

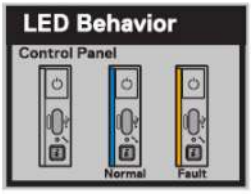

Figure 27. LED behavior E3.s drives

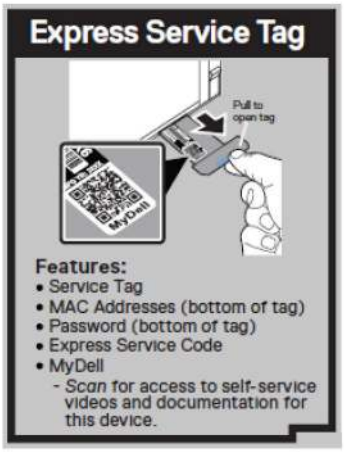

Figure 28. Express Service Tag for 8 x 2.5 inch drive system

Figure 29. Express Service Tag for 8 x E3.s drive system

Figure 30. Caution

Figure 31. QRL

Rail sizing and rack compatibility matrix

For specific information about the rail solutions compatible with your system, see the *Dell Enterprise Systems Rail Sizing and Rack Compatibility Matrix* available at rail-rack-matrix.

The document provides the information that is listed below:

- Specific details about rail types and their functionalities.
- Rail adjustability range for various types of rack mounting flanges.
- Rail depth with and without cable management accessories.
- Types of racks that are supported for various types of rack mounting flanges.

3

Technical specifications

The technical and environmental specifications of your system are outlined in this chapter.

Topics:

- Chassis dimensions
- System weight
- Processor specifications
- PSU specifications
- Cooling fan specifications
- Supported operating systems
- System battery specifications
- Expansion card riser specifications
- Memory specifications
- Storage controller specifications
- Drives
- GPU Specifications
- DPU Specifications
- Ports and connectors specifications
- Video ports specifications
- Environmental specifications

Chassis dimensions

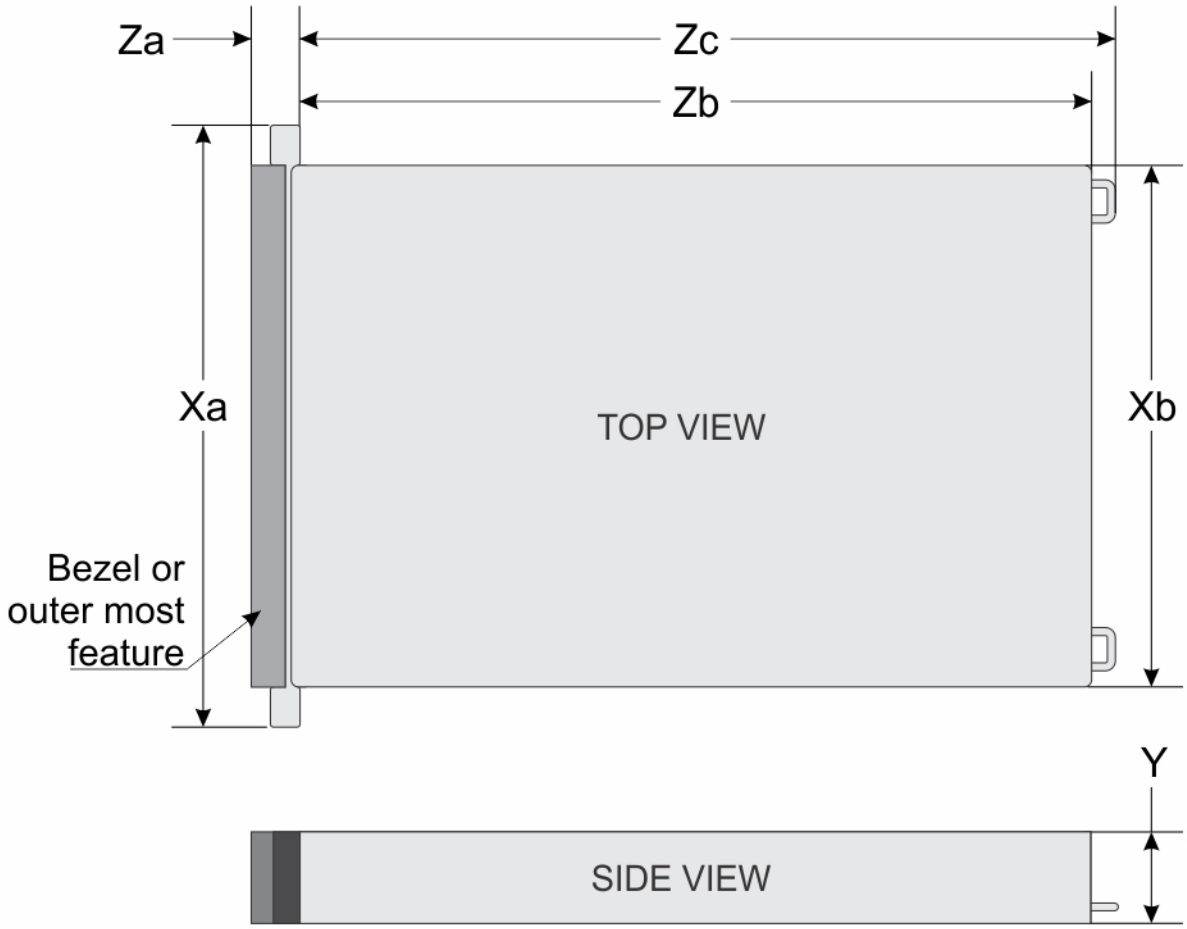

Figure 32. Chassis dimensions

Table 16. PowerEdge R470 chassis dimensions

Drives	Xa	Xb	Y	Za	Zb	Zc
8 x E3.S EDSFF drives Front I/O configuration	482.0 mm (19 inches)	434.0 mm (17.1 inches)	42.8 mm (1.69 inches)	43.3 mm (1.7 inches)	750.57 mm (29.55 inches) Ear to rear wall	786.141 mm (30.95 inches) Ear to PSU handle
8 x 2.5-inch drives 10 x 2.5-inch drives 4 x 3.5-inch drives 16 x E3.S EDSFF drives	482.0 mm (19 inches)	434.0 mm (17.1 inches)	42.8 mm (1.69 inches)	With bezel 30.78 mm (1.21 inches) Without bezel 29.0 mm (1.14inches)	750.57 mm (29.55 inches) Ear to rear wall	786.141 mm (30.95 inches) Ear to PSU handle

NOTE: Zb is the nominal rear wall external surface where the HPM board I/O connectors reside.

NOTE: Front bezel is not supported on systems with front I/O configuration.

System weight

Table 17. PowerEdge R470 system weight

System configuration	Maximum weight (with all drives/SSDs)
8 x E3.S EDSFF	19.11 kg (42.13 lbs)
16 x E3.S EDSFF	17.66 kg (38.93 lbs)
8 x 2.5-inch SATA	17.03 kg (37.54 lbs)
10 x 2.5 - inch SATA	17.53 kg (38.64 lbs)
4 x 3.5 - inch SATA	18.78 kg (41.40 lbs)

Table 18. PowerEdge R470 weight handling recommendations

Chassis weight	Description
40–70 lbs	Recommend two people to lift.
70–120 lbs	Recommend three people to lift.
≥ 121 lbs	Recommend to use a server-lift.

Processor specifications

Table 19. PowerEdge R470 processor specifications

Supported processor	Number of processors supported
Intel® Xeon 6 processor	One **NOTE:** R470 supports both Intel® E- Core and Intel® P-Core processors

Table 20. Minimum Firmware requirement for Intel® Xeon® 6 E-core processor and Intel® Xeon® 6 P-core processor

Processors	IDRAC	BIOS	FPGA
Intel® Xeon® 6 E-core processor	1.10.17.00	1.1.3	106.102.000
Intel® Xeon® 6 P-core processor	1.20.25.00	1.2.6	107.102.000

PSU specifications

The PowerEdge R470 system supports up to two AC or DC power supply units (PSUs).

Table 21. PSU specifications

PSU	Class	Heat dissipation (maximum) (BTU/hr)	Frequency (Hz)	AC Voltage			DC Voltage			Current (A)
				200—240 V	100—120 V	277 V	240 V	- (48—60) V	336 V	
800 W mixed mode	Platinum	3000	50/60	800 W	800 W	N/A	N/A	N/A	N/A	9.2—4.5 A

Table 21. PSU specifications (continued)

PSU	Class	Heat dissipation (maximum) (BTU/hr)	Frequency (Hz)	AC Voltage			DC Voltage			Current (A)
				200—240 V	100—120 V	277 V	240 V	- (48—60) V	336 V	
	Titanium	3000	50/60	800 W	800 W	N/A	N/A	N/A	N/A	9.2—4.5 A
	N/A	3000	N/A	N/A	N/A	N/A	800 W	N/A	N/A	3.7 A
1100 W	Titanium	4100	50/60	1100 W	1050 W	N/A	N/A	N/A	N/A	12—6.1 A
	Platinum	4100	50/60	1100 W	1050 W	N/A	N/A	N/A	N/A	12—6.1 A
	N/A	4100	N/A	N/A	N/A	N/A	1100 W	N/A	N/A	5.1 A
1400 W -48 VDC	Titanium	5310	N/A	N/A	N/A	N/A	N/A	1400 W	N/A	33 A
1500 W 227 VAC	Titanium	5625	50/60	N/A	N/A	N/A	1500 W	N/A	N/A	6.1 A
	N/A	5625	N/A	N/A	N/A	N/A	N/A	N/A	1500 W	4.91 A
1500 W mixed mode	Titanium	5625	50/60	1500 W	1050 W	N/A	N/A	N/A	N/A	12—8.2 A
	N/A	5625	N/A	N/A	N/A	N/A	1500 W	N/A	N/A	6.8 A

NOTE: If a system with AC 1500 W PSUs operates at low line 100-120 Vac, then the power rating per PSU is degraded to1050 W.

NOTE: Heat dissipation is calculated using the PSU wattage rating.

NOTE: When selecting or upgrading the system configuration, to ensure optimum power utilization, verify the system power consumption with the Enterprise Infrastructure Planning Tool available at calc .

Figure 33. PSU power cables

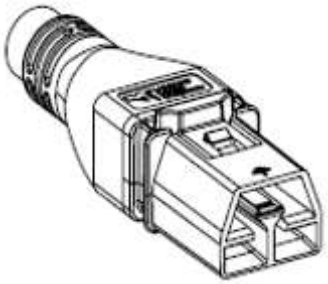

Figure 34. APP 2006G1 power cable

Figure 35. LOTES APOWA048 power cable

Table 22. PSU power cables

Form factor	Output	Power cable
Redundant 60 mm	800 W mixed mode	C13
	1100 W mixed mode	C13
	1400 W -48v DC	LOTES APOWA048
	1500 W mixed mode	C13
	1500w 277v	APP2006G1/2006G3

Cooling fan specifications

The PowerEdge R470 system supports up to four sets of 2 fan module standard (STD) cooling fans or high performance (HPR) silver cooling fans .

Table 23. Cooling fan specifications

Fan type	Abbreviation	Also known as	Label color	Label image
Standard (STD) fans	STD	STD	No label	
High performance (HPR) silver fans	HPR SLVR	HPR	Silver	

NOTE: Cooling fans rotate at a slower speed, even while the system is in standby mode, and the fan speed varies in response to changes in the ambient temperature.

Supported operating systems

The PowerEdge R470 system supports the following operating systems:

- Canonical Ubuntu Server LTS
- RedHat Enterprise Linux
- SUSE Linux Enterprise Server
- VMware ESXi
- Windows Server
- Windows Server Datacenter

For specifications and interoperability details, see OS support. .

System battery specifications

The PowerEdge R470 system uses one CR 2032 3.0-V lithium coin cell battery.

Expansion card riser specifications

The PowerEdge R470 system supports PCI express (PCIe) slots on risers. On the front I/O configuration, the R470 supports up to two Full Height (FH) PCIe slots. On the rear I/O configuration, the R470 supports up to two FH or two Low Profile (LP) PCIe slots on the riser.

Table 24. Expansion card slots are supported on the HPM board

PCIe slot	Expansion card riser	Processor connection	Height	Length	Slot width
Slot 3 (Optional rear BOSS-N1)	N/A	Processor 0	N/A	N/A	x4
Slot 5 (Optional OCP)	N/A	Processor 0	N/A	N/A	x16
Slot 31	RF1d (front OCP)	Processor 0	N/A	N/A	x16
Slot 32	RF1d (front OCP)	Processor 0	N/A	N/A	x16
Slot 34 (Optional front BOSS-N1)	N/A	Processor 0	N/A	N/A	x4
Slot 1	R2q	Processor 0	Full Height	Half Length	x16
Slot 4	R4b	Processor 0	Full Height	Half Length	x16
Slot 34 (Optional front BOSS-N1)	N/A	Processor 0	N/A	N/A	x4
Slot 1	R2k	Processor 0	Low profile	Half Length	x16
Slot 2 (Flop OCP)	R2k	Processor 0	N/A	N/A	x16
Slot 4	R4a	Processor 0	Low Profile	Half Length	x16
Slot 1	R2v	Processor 0	Low Profile	Half Length	x16

Table 24. Expansion card slots are supported on the HPM board (continued)

PCIe slot	Expansion card riser	Processor connection	Height	Length	Slot width
Slot 2 (Flop OCP)	R2v	Processor 0	N/A	N/A	x16

Memory specifications

The PowerEdge R470 system supports the following memory specifications for optimized operation.

Table 25. Memory specifications

DIMM type	Rank	Capacity	Single Processor			
			Intel® Xeon 6 E- core processor		Intel® Xeon 6 P- core processor	
			Minimum system capacity	Maximum system capacity	Minimum system capacity	Maximum system capacity
RDIMM	1 R	16 GB	N/A	N/A	16 GB	128 GB
	2 R	32 GB	32 GB	256 GB	32 GB	512 GB
		64 GB	512 GB	1 TB	256 GB	1 TB
		96 GB	N/A	N/A	768 GB	1.5 TB
		128 GB	N/A	N/A	1 TB	2 TB
	8 R	256 GB	N/A	N/A	4 TB	4 TB

NOTE: For Intel® Xeon 6 E- core processor 32GB could be 1DIMM per CPU or 1 DIMM per channel.

NOTE: For Intel® Xeon 6 P- core processor - series processor, 16 GB and 32GB could be 1DIMM per CPU with limited features.

NOTE: 16 GB and 96 GB memory are supported only in on Intel® Xeon 6 P- core processors .

NOTE: DIMM mixing configurations are not allowed. All DIMM slots must be populated with the exact same DIMMs (one Dell PN).

Table 26. Memory module sockets

Memory module sockets	Speed
16, 288-pin	6400 MT/s (1DPC) 5200 MT/s (2 DPC)

NOTE: Memory DIMM slots are not hot pluggable.

NOTE: The processor may reduce the performance of the rated DIMM speed.

Storage controller specifications

The PowerEdge R470 system supports the following controller cards:

Table 27. Storage controller cards

Supported storage controller cards
Internal controllers

Table 27. Storage controller cards (continued)

Supported storage controller cards
• PERC H365i DC-MHS Front • PERC H965i DC-MHS Front • PERC H365i adapter • PERC H965i adapter
External controllers • PERC H965e • HBA 465e
Internal boot • Boot Optimized Storage Subsystem (BOSS-N1 DC-MHS) • M.2 interposer with up to 2 x M.2 NVMe SSDs • USB
Software RAID • N/A

Drives

The PowerEdge R470 system supports:

- 8 x EDSFF E3.S hot-swappable NVMe drives.
- Up to 16 x EDSFF E3.S hot-swappable NVMe drives.
- 8 x 2.5-inch hot-swappable SATA drives.
- 10 x 2.5-inch hot-swappable SATA drives with four universal ports.
- 4 x 3.5-inch hot-swappable SATA drives with 2 x EDSFF E3.S hot-swappable rear drives.

NOTE: For more information about how to hot swap NVMe PCIe SSD U.2 device, see the *Dell Express Flash NVMe PCIe SSD User's Guide* at Dell Support page >**Browse all Products** > **Data Center Infrastructure** > **Storage Adapters & Controllers** > **Dell PowerEdge Express Flash NVMe PCIe SSD** > **Documentation** > **Manuals and Documents**.

GPU Specifications

The Dell PowerEdge R470 system supports

- Up to four NVIDIA L4 24 GB 72 W Low Profile or Full Height card.

DPU Specifications

The PowerEdge R470 platform accommodates Data Processing Units (DPUs). These units are system-on-chip solutions that combine ARM cores, high-performance NICs, and programmable acceleration engines to offload and accelerate data center infrastructure services.

Table 28. Supported Data Processing Units(DPU) Cards

Feature	Specifications
Model	NVIDIA BlueField-3 B3220
Type	Data Processing Units (DPU)
Networking	2 x 200 GbE
Form Factor	FHHL
Interface	PCIe Gen5 x16
Power Consumption	150 W

Table 28. Supported Data Processing Units(DPU) Cards (continued)

Feature	Specifications
Compatible Risers	RC2 (Slot 31), RC4 (Slot 1), RC5 (Slot 1), RC6 (Slot 1)

Ports and connectors specifications

NIC port specifications

The PowerEdge R470 system supports Network Interface Controller (NIC) ports embedded on the optional Open Compute Project (OCP) cards.

NOTE: The OCP NIC card is installed at the front or rear of the system, depending on the system I/O configuration.

Table 29. NIC port specification for the system

Feature	Specifications
Datacenter-Secure Control Module (DC-SCM)	1GB x 1
OCP 3.0 card	25 GbE x 2 , 25 GbE x 4 ,100 GbE x 2

USB ports specifications

Table 30. PowerEdge R470 USB specifications

Front		Rear		Internal	
USB port type	No. of ports	USB port type	No. of ports	USB port type	No. of ports
USB 2.0-compliant port	One (Optional)	USB 3.1-compliant ports	Two	Internal USB 3.1-compliant port	One
Type-C USB 2.0-compliant port dual-mode host/ iDRAC Direct port	One				

Serial connector specifications

The PowerEdge R470 system supports one optional card type connector, which is a 9 - pin connector, Data Terminal Equipment (DTE), 16550-compliant .

The optional serial connector card is available only in front I/O configuration.

Top USB port on DC-SCM supports external DB9 Dongle.

Video ports specifications

The PowerEdge R470 system supports one DB-15 VGA port (optional) on the rear I/O board and one Mini Display (mDP) port (optional) on the Left Control Panel (LCP) .

NOTE: Both ports cannot be used together. The mDP port overrides the VGA port.

Video specifications

The PowerEdge R470 system supports integrated Matrox G200 graphics controller with 16 MB of video frame buffer.

Table 31. Supported video resolution options

Resolution	Refresh rate (Hz)	Color depth (bits)
1024 x 768	60	8, 16, 32
1280 x 800	60	8, 16, 32
1280 x 1024	60	8, 16, 32
1360 x 768	60	8, 16, 32
1440 x 900	60	8, 16, 32
1600 x 900	60	8, 16, 32
1600 x 1200	60	8, 16, 32
1680 x 1050	60	8, 16, 32
1920 x 1080	60	8, 16, 32
1920 x 1200	60	8, 16, 32

Environmental specifications

NOTE: For additional information about environmental certifications, refer to the Product Environmental Datasheet located with the Documentation on Dell Support.

Table 32. Continuous Operation Specifications for ASHRAE A2

Temperature	Allowable continuous operations
Temperature range for altitudes <= 900 m (<= 2953 ft)	10–35°C (50–95°F) with no direct sunlight on the equipment
Humidity percent range (non-condensing at all times)	8% RH with -12°C minimum dew point to 80% RH with 21°C (69.8°F) maximum dew point
Operational altitude de-rating	Maximum temperature is reduced by 1°C/300 m (1.8°F/984 Ft) above 900 m (2953 Ft)

Table 33. Continuous Operation Specifications for ASHRAE A3

Temperature	Allowable continuous operations
Temperature range for altitudes <= 900 m (<= 2953 ft)	5–40°C (41–104°F) with no direct sunlight on the equipment
Humidity percent range (non-condensing at all times)	8% RH with -12°C minimum dew point to 85% RH with 24°C (75.2°F) maximum dew point
Operational altitude de-rating	Maximum temperature is reduced by 1°C/175 m (1.8°F/984 Ft) above 900 m (2953 Ft)

Table 34. Continuous Operation Specifications for ASHRAE A4

Temperature	Allowable continuous operations
Temperature range for altitudes <= 900 m (<= 2953 ft)	5–45°C (41–113°F) with no direct sunlight on the equipment
Humidity percent range (non-condensing at all times)	8% RH with -12°C minimum dew point to 90% RH with 24°C (75.2°F) maximum dew point
Operational altitude de-rating	Maximum temperature is reduced by 1°C/125 m (1.8°F/984 Ft) above 900 m (2953 Ft)

Table 35. Common Environmental Specifications for ASHRAE A2, A3, and A4

Temperature	Allowable continuous operations
Maximum temperature gradient (applies to both operation and non-operation)	20°C in an hour* (36°F in an hour) and 5°C in 15 minutes (41°F in 15 minutes), 5°C in an hour* (9°F in an hour) for tape **NOTE:** * - Per ASHRAE thermal guidelines for tape hardware, these are not instantaneous rates of temperature change.
Non-operational temperature limits	-40 to 65°C (-40 to 149°F)
Non-operational humidity limits	5% to 95% RH with 27°C (80.6°F) maximum dew point
Maximum non-operational altitude	12,000 meters (39,370 feet)
Maximum operational altitude	3,048 meters (10,000 feet)

Table 36. Maximum vibration specifications

Maximum vibration	Specifications
Operating	0.21 G_{rms} at 5 Hz to 500 Hz for 10min (all x, y, and z axes)
Storage	1.38 G_{rms} at 7 Hz to 250 Hz for 15 minutes (all six sides tested)

Table 37. Maximum shock pulse specifications

Maximum shock pulse	Specifications
Operating	Six consecutively executed shock pulses in the positive and negative x, y, and z axis of 6 G for up to 11 ms.
Storage	Six consecutively executed shock pulses in the positive and negative x, y, and z axis (one pulse on each side of the system) of 71 G for up to 2 ms.

Particulate and gaseous contamination specifications

The following table defines the limitations that help avoid any equipment damage or failure from particulates and gaseous contamination. If the levels of particulates or gaseous pollution exceed the specified limitations and result in equipment damage or failure, you must rectify the environmental conditions. Remediation of environmental conditions is the responsibility of the customer.

Table 38. Particulate contamination specifications

Particulate contamination	Specifications
Air filtration: Conventional Data Center only	Data center air filtration as defined by ISO Class 8 per ISO 14644-1 with a 95% upper confidence limit **NOTE:** Filtering room air with a MERV8 filter, as specified in ANSI/ASHRAE Standard 127, is a recommended method for achieving the necessary environmental conditions. **NOTE:** Air entering the data center must have MERV11 or MERV13 filtration. **NOTE:** This condition applies to data center environments only. Air filtration requirements do not apply to IT equipment designed to be used outside a data center, in environments such as an office or factory floor.
Walk-Up Edge Data Center or Cabinet (sealed, closed loop environment)	Filtration is not required for cabinets that are anticipated to be opened six times or less per year. Class 8 per ISO 1466-1 filtration as defined above is required otherwise. **NOTE:** In environments commonly above ISA-71 Class G1 or that may have known challenges, special filters may be required.

Table 38. Particulate contamination specifications (continued)

Particulate contamination	Specifications
Conductive dust: data center and non-data center environments	Air must be free of conductive dust, zinc whiskers, or other conductive particles. **NOTE:** Conductive dust, which can interfere with equipment operation, can originate from various sources, including manufacturing processes and zinc whiskers that may develop on the plating of raised floor tiles. **NOTE:** This condition applies to data center and non-data center environments.
Corrosive dust: data center and non-data center environments	• Air must be free of corrosive dust. • Residual dust present in the air must have a deliquescent point less than 60% relative humidity. **NOTE:** This condition applies to data center and non-data center environments.

Table 39. Gaseous contamination specifications

Gaseous contamination	Specifications	Notes
Copper coupon corrosion rate	ISA-71 Class G1: <300 Å/month	Per ANSI/ISA71.04
Silver coupon corrosion rate	ISA-71 Class G1: <200 Å/month	Per ANSI/ISA71.04

Thermal restriction matrix

Table 40. Label reference

Label	Description
STD	Standard
HPR (Silver)	High performance Silver (HPR SLVR) fan
HPR (Gold)	High performance Gold (HPR GOLD) fan
HSK	Heat sink
LP	Low profile
FH	Full height
DLC	Direct Liquid Cooling

Table 41. Processor and heat sink matrix

Heat sink	Processor TDP
Extend HSK	<=250 W
Remote HSK	>250 W

NOTE: The configuration's ambient temperature is dictated by its critical component. For example, if the processor's ambient temperature is 35°C, the DIMM is 35°C, and the GPU is 30°C, the configuration's ambient temperature can only be 30°C.

Table 42. Thermal restriction matrix (non-GPU)

Configuration			8 x EDSFF E3.S NVMe	16 x EDSFF E3.S NVMe	8 x 2.5 inch SAS/SATA/ NVMe	10 x 2.5 inch SAS/SATA	4 x 3.5 inch SAS/SATA with rear 2 x EDSFF E3.S NVMe	Ambient temperature
Storage configuration number			C01-1/2/3 , C06-01	C05-01	C02-1/2/3/5/6	C04-1/2	C03-01	
Riser configuration			RC-2/3/4/56/7	RC-7	RC-0/6/8	RC-6/7	RC-1	
Air shroud type			EXT/Remote	EXT/Remote	EXT/Remote	EXT/Remote	EXT/Remote	
Processor	TDP	Cores	Fan					
6780E	330 W	144	HPR SLVR	HPR SLVR	HPR SLVR	HPR SLVR	HPR SLVR	35°C
6766E	250 W	144	STD	STD	STD	HPR SLVR	STD	35°C
6756E	225 W	128	STD	STD	STD	STD	STD	35°C
6746E	250 W	112	STD	STD	STD	HPR SLVR	STD	35°C
6740E	250 W	96	STD	STD	STD	HPR SLVR	STD	35°C
6731E	250 W	96	STD	STD	STD	HPR SLVR	STD	35°C
6710E	205 W	64	STD	STD	STD	STD	STD	35°C
6787P	350 W	86	HPR SLVR	HPR SLVR	HPR SLVR	HPR SLVR	HPR SLVR	35°C
6767P	350 W	64	HPR SLVR	HPR SLVR	HPR SLVR	HPR SLVR	HPR SLVR	35°C
6747P	330 W	48	HPR SLVR	HPR SLVR	HPR SLVR	HPR SLVR	HPR SLVR	35°C
6737P	270 W	32	HPR SLVR	HPR SLVR	HPR SLVR	HPR SLVR	HPR SLVR	35°C
6730P	250 W	32	STD	STD	STD	HPR SLVR	STD	35°C
6527P	255 W	24	HPR SLVR	HPR SLVR	HPR SLVR	HPR SLVR	HPR SLVR	35°C
6724P	210 W	16	STD	STD	STD	STD	STD	35°C
6517P	190 W	16	STD	STD	STD	STD	STD	35°C
6505P	150 W	12	STD	STD	STD	STD	STD	35°C
6507P	150 W	8	STD	STD	STD	STD	STD	35°C
6781P	350 W	80	HPR SLVR	HPR SLVR	HPR SLVR	HPR SLVR	HPR SLVR	35°C
6761P	350 W	64	HPR SLVR	HPR SLVR	HPR SLVR	HPR SLVR	HPR SLVR	35°C
6741P	300 W	48	HPR SLVR	HPR SLVR	HPR SLVR	HPR SLVR	HPR SLVR	35°C
6731P	245 W	32	STD	STD	STD	STD	STD	35°C
6521P	225 W	24	STD	STD	STD	STD	STD	35°C
6511P	150 W	16	STD	STD	STD	STD	STD	35°C

NOTE: Extended heatsink and shroud can support CPU TDP up to 250 W.

Table 43. Thermal restriction matrix (GPU)

Configuration			8 x EDSFF E3.S NVMe	16 x EDSFF E3.S NVMe	8 x 2.5 inch SAS/SATA/ NVMe	10 x 2.5 inch SAS/SATA	4 x 3.5 inch SAS/SATA with rear 2 x EDSFF E3.S NVMe	Ambient temperature
Storage configuration number			C01-1/2/3 , C06-01	C05-01	C02-1/2/3/5/6	C04-1/2	C03-01	
Riser configuration			RC-2/3/4/56/7	RC-7	RC-0/6/8	RC-6/7	RC-1	
Air shroud type			EXT/Remote	EXT/Remote	EXT/Remote	EXT/Remote	EXT/Remote	
Processor	TDP	Cores	Fan					
6780E	330 W	144	HPR SLVR	HPR SLVR	HPR SLVR	HPR SLVR	HPR SLVR	35°C
6766E	250 W	144	STD	STD	STD	HPR SLVR	STD	35°C
6756E	225 W	128	STD	STD	STD	STD	STD	35°C
6746E	250 W	112	STD	STD	STD	HPR SLVR	STD	35°C
6740E	250 W	96	STD	STD	STD	HPR SLVR	STD	35°C
6731E	250 W	96	STD	STD	STD	HPR SLVR	STD	35°C
6710E	205 W	64	STD	STD	STD	STD	STD	35°C
6787P	350 W	86	HPR SLVR	HPR SLVR	HPR SLVR	HPR SLVR	HPR SLVR	35°C
6767P	350 W	64	HPR SLVR	HPR SLVR	HPR SLVR	HPR SLVR	HPR SLVR	35°C
6747P	330 W	48	HPR SLVR	HPR SLVR	HPR SLVR	HPR SLVR	HPR SLVR	35°C
6737P	270 W	32	HPR SLVR	HPR SLVR	HPR SLVR	HPR SLVR	HPR SLVR	35°C
6730P	250 W	32	STD	STD	STD	HPR SLVR	STD	35°C
6527P	255 W	24	HPR SLVR	HPR SLVR	HPR SLVR	HPR SLVR	HPR SLVR	35°C
6724P	210 W	16	STD	STD	STD	STD	STD	35°C
6517P	190 W	16	STD	STD	STD	STD	STD	35°C
6505P	150 W	12	STD	STD	STD	STD	STD	35°C
6507P	150 W	8	STD	STD	STD	STD	STD	35°C
6781P	350 W	80	HPR SLVR	HPR SLVR	HPR SLVR	HPR SLVR	HPR SLVR	35°C
6761P	350 W	64	HPR SLVR	HPR SLVR	HPR SLVR	HPR SLVR	HPR SLVR	35°C
6741P	300 W	48	HPR SLVR	HPR SLVR	HPR SLVR	HPR SLVR	HPR SLVR	35°C
6731P	245 W	32	STD	STD	STD	STD	STD	35°C
6521P	225 W	24	STD	STD	STD	STD	STD	35°C
6511P	150 W	16	STD	STD	STD	STD	STD	35°C

NOTE: Extended heatsink and shroud can support CPU TDP up to 250 W.

NOTE: Remote heatsink and HPR SLVR fan is required for 350 W CPU TDP supporting at 35°C ambient temperature.

NOTE: System can support CPU TDP up to 250 W with extended heatsink and STD fan in 8x EDSFF E3.S cold aisle config and 8 x 2.5- inch SAS/SATA(NVMeRAID/direct) config at 35°C ambient temperature.

NOTE: System can support CPU TDP up to 225 W with extended heatsink and STD fan in 10 x 2.5-inch SAS/SATA config at 35°C ambient temperature.

Thermal air restrictions

ASHRAE A3 environment

8 x EDSFF E3.S Configuration (Cold Aisle Capable Front I/O)

- CPU > 225 W is not supported.
- 128G or greater capacity RDIMMs are not supported.
- GPU cards are not supported.
- DPU is not supported.
- Two PSUs are required in redundant mode. System performance may be reduced in the event of a PSU failure.
- Non-Dell qualified peripheral cards and/or peripheral cards greater than 25 W are not supported.
- 85 C active optics or DAC is required.

16 x EDSFF E3.S Configuration

- CPU > 225 W is not supported.
- 128G or greater capacity RDIMMs are not supported.
- GPU cards are not supported.
- DPU is not supported.
- Two PSUs are required in redundant mode. System performance may be reduced in the event of a PSU failure.
- Non-Dell qualified peripheral cards and/or peripheral cards greater than 25 W are not supported.
- 85 C active optics or DAC is required.

8 x 2.5-inch Configuration SAS/SATA; NVMe RAID/direct

- CPU > 225 W is not supported.
- 128G or greater capacity RDIMMs are not supported.
- GPU cards are not supported.
- DPU is not supported.
- Two PSUs are required in redundant mode. System performance may be reduced in the event of a PSU failure.
- Non-Dell qualified peripheral cards and/or peripheral cards greater than 25 W are not supported.
- 85 C active optics or DAC is required.

10 x 2.5-inch Configuration SAS/SATA

- CPU > 185 W is not supported.
- 128G or greater capacity RDIMMs are not supported.
- GPU cards are not supported.
- DPU is not supported.
- Two PSUs are required in redundant mode. System performance may be reduced in the event of a PSU failure.
- Non-Dell qualified peripheral cards and/or peripheral cards greater than 25 W are not supported.
- 85 C active optics or DAC is required.

4 x 3.5-inch Configuration with rear 2 x EDSFF E3.S drives

- CPU > 185 W is not supported.
- 128G or greater capacity RDIMMs are not supported.
- GPU cards are not supported.
- DPU is not supported.
- Two PSUs are required in redundant mode. System performance may be reduced in the event of a PSU failure.
- Non-Dell qualified peripheral cards and/or peripheral cards greater than 25 W are not supported.
- 85 C active optics or DAC is required.

ASHRAE A4 environment

8 x EDSFF E3.S Configuration (Cold Aisle Capable Front I/O)

- CPU > 185 W is not supported.
- 128G or greater capacity RDIMMs are not supported.
- BOSS-N1 DC-MHS is not supported at the rear of the system..
- GPU cards are not supported.

- DPU is not supported.
- Two PSUs are required in redundant mode. System performance may be reduced in the event of a PSU failure.
- Non-Dell qualified peripheral cards and/or peripheral cards greater than 25 W are not supported.
- 85 C active optics or DAC is required.

16 x EDSFF E3.S Configuration

- CPU > 185 W is not supported.
- 128G or greater capacity RDIMMs are not supported.
- BOSS-N1 DC-MHS is not supported..
- GPU cards are not supported.
- DPU is not supported.
- Two PSUs are required in redundant mode. System performance may be reduced in the event of a PSU failure.
- Non-Dell qualified peripheral cards and/or peripheral cards greater than 25 W are not supported.
- 85 C active optics or DAC is required.

8 x 2.5-inch Configuration SAS/SATA; NVMe RAID/direct

- CPU > 185 W is not supported.
- 128G or greater capacity RDIMMs are not supported.
- BOSS-N1 DC-MHS is not supported..
- GPU cards are not supported.
- DPU is not supported.
- Two PSUs are required in redundant mode. System performance may be reduced in the event of a PSU failure.
- Non-Dell qualified peripheral cards and/or peripheral cards greater than 25 W are not supported.
- 85 C active optics or DAC is required.

10 x 2.5-inch Configuration SAS/SATA; NVMe RAID/direct

- CPU > 165 W is not supported.
- 128G or greater capacity RDIMMs are not supported.
- BOSS-N1 DC-MHS is not supported..
- GPU cards are not supported.
- DPU is not supported.
- Two PSUs are required in redundant mode. System performance may be reduced in the event of a PSU failure.
- Non-Dell qualified peripheral cards and/or peripheral cards greater than 25 W are not supported.
- 85 C active optics or DAC is required.

4 x 3.5-inch Configuratio with rear 2 x EDSFF E3.S drives

- CPU > 165 W is not supported.
- 128G or greater capacity RDIMMs are not supported.
- BOSS-N1 DC-MHS is not supported..
- GPU cards are not supported.
- DPU is not supported.
- Two PSUs are required in redundant mode. System performance may be reduced in the event of a PSU failure.
- Non-Dell qualified peripheral cards and/or peripheral cards greater than 25 W are not supported.
- 85 C active optics or DAC is required.

NOTE: There are no specific restrictions for ASHRAE A2 environment.

Additional Restriction

For rear I/O configurations with 25 Gb and above,25Gb PCIe/OCP cards require DAC or 85 C active optics.

85 C active optics are SFP28 and QSFP+

4

Initial system setup and configuration

This section describes the tasks for initial setup and configuration of the Dell system. The section also provides general steps to set up the system and the reference guides for detailed information.

Topics:

- Setting up the system
- iDRAC configuration
- Resources to install operating system

Setting up the system

Perform the following steps to set up the system:

Steps

1. Unpack the system.
2. Install the system into the rack. For more information, see the rail installation and cable management accessory guides relevant to your rail and cable management solution at PowerEdge Manuals.
3. Connect the peripherals to the system and the system to the electrical outlet.
4. Power on the system.

   For more information about setting up the system, see the *Getting Started Guide* that is shipped with your system.

   NOTE: For information about managing the basic settings and features of the system, see the Pre-operating system management applications chapter.

iDRAC configuration

The Integrated Dell Remote Access Controller (iDRAC) is designed to make you more productive as a system administrator and improve the overall availability of Dell servers. iDRAC alerts you to system issues, helps you to perform remote management, and reduces the need for physical access to the system.

Options to set up iDRAC IP address

To enable communication between your system and iDRAC, you must first configure the network settings based on your network infrastructure. The network settings option is set to **DHCP**, by default.

NOTE: For static IP configuration, you must request for the settings at the time of purchase.

You can set up the iDRAC IP address using one of the interfaces in the table below. For information about setting up iDRAC IP address, see the documentation links provided in the table below.

Table 44. Interfaces to set up iDRAC IP address

Interface	Documentation links
iDRAC Settings utility	Integrated Dell Remote Access Controller User's Guide at iDRAC Manuals or for system-specific Integrated Dell Remote Access Controller User's Guide, go to PowerEdge Manuals > **Product Support** page of your system > **Documentation**.

Table 44. Interfaces to set up iDRAC IP address (continued)

Interface	Documentation links
	NOTE: To determine the most recent iDRAC release for your platform and for the latest documentation version, see KB article KB305325.
iDRAC Direct	Integrated Dell Remote Access Controller User's Guide at iDRAC Manuals or for system-specific Integrated Dell Remote Access Controller User's Guide, go to PowerEdge Manuals > **Product Support** page of your system > **Documentation**. **NOTE:** To determine the most recent iDRAC release for your platform and for the latest documentation version, see KB article KB305325.

NOTE: To access iDRAC, ensure that you connect the USB 2.0 Type-C cable to the iDRAC dedicated port on the front of the system.

Options to log in to iDRAC

To log in to the iDRAC Web User Interface, open a browser and enter the IP address.

You can log in to iDRAC as:

- iDRAC user
- Microsoft Active Directory user
- Lightweight Directory Access Protocol (LDAP) user

In the login screen displayed, if you have opted for secure default access to iDRAC, the default username is `root` and enter the iDRAC secure default password available on back of the Information Tag. If you opted for legacy password, use the iDRAC legacy username and password - `root` and `calvin`, the iDRAC default password will be blank on the information tag. Then you will be prompted and required to create a password of your choice before proceeding. You can also log in by using your Single Sign-On or Smart Card.

NOTE: Ensure that you change the default username and password after setting up the iDRAC IP address.

For more information about logging in to the iDRAC and iDRAC licenses, see the latest Integrated Dell Remote Access Controller User's Guide

NOTE: To determine the most recent iDRAC release for your platform and for latest documentation version, see KB article KB78115.

You can also access iDRAC using command-line protocol - RACADM. For more information, see the Integrated Dell Remote Access Controller RACADM CLI Guide.

You can also access iDRAC using automation tool - Redfish API. For more information, see the Integrated Dell Remote Access Controller User's Guide Redfish API Guide.

Resources to install operating system

If the system is shipped without an operating system, you can install a supported operating system by using one of the resources that are provided in the table below. For information about how to install the operating system, see the documentation links provided in the table below.

Table 45. Resources to install the operating system

Resource	Documentation links
iDRAC	Integrated Dell Remote Access Controller User's Guide or for system-specific Integrated Dell Remote Access Controller User's Guide, go to PowerEdge Manuals > **Product Support** page of your system > **Documentation**.

Table 45. Resources to install the operating system (continued)

Resource	Documentation links
	NOTE: To determine the most recent iDRAC release for your platform and for the latest documentation version, see KB article at KB78115.
Lifecycle Controller	Dell Lifecycle Controller User's Guide at iDRAC Manuals or for system-specific Dell Lifecycle Controller User's Guide , go to PowerEdge Manuals > **Product Support** page of your system > **Documentation**. Dell Technologies recommends using Lifecycle Controller to install the OS, since all required drivers are installed on the system. **NOTE:** To determine the most recent iDRAC release for your platform and for the latest documentation version, see KB article at KB78115.

NOTE: For more information about installation and how-to videos for operating systems that are supported on PowerEdge systems, see Supported Operating Systems for Dell PowerEdge systems.

Options to download drivers and firmware

You can download the firmware from the Dell support site. For information about downloading firmware, see the Downloading drivers and firmware section.

You can also choose any one of the following options to download the firmware. For information about how to download the firmware, see the documentation links provided in the table below.

Table 46. Options to download firmware

Option	Documentation link
Using Integrated Dell Remote Access Controller Lifecycle Controller (iDRAC with LC)	idrac manuals
Using iDRAC virtual media	idrac manuals

Options to download and install OS drivers

You can choose any one of the following options to download and install OS drivers. For information about how to download or install OS drivers, see the documentation links provided in the table below.

Table 47. Options to download and install OS drivers

Option	Documentation
Dell support site	Downloading drivers and firmware section.
iDRAC virtual media	Integrated Dell Remote Access Controller User's Guide or for system specific, go to Integrated Dell Remote Access Controller User's Guide > **Product Support** page of your system > **Documentation** . **NOTE:** To determine the most recent iDRAC release for your platform and for latest documentation version, see iDRAC versions and release notes.

Downloading drivers and firmware

It is recommended that you download and install the latest BIOS, drivers, and systems management firmware on the system.

Prerequisites

Ensure that you clear the web browser cache before downloading the drivers and firmware.

Steps

1. Go to Drivers.
2. Enter the Service Tag of the system in the **Enter a Dell Service Tag, Dell Product ID or Model** field, and then press Enter.

   NOTE: If you do not have the Service Tag, click **Browse all products**, and navigate to your product.

3. On the displayed product page, click **Drivers & Downloads**.
   On the **Drivers & Downloads** page, all drivers that are applicable to the system are displayed.
4. Download the drivers to a USB drive, CD, or DVD.

5

Pre-operating system management applications

You can manage basic settings and features of a system without booting to the operating system by using the system firmware.

Options to manage the pre-operating system applications

You can use any one of the following options to manage the pre-operating system applications:

- System Setup
- Boot Manager
- Preboot Execution Environment (PXE)

Topics:

- System Setup
- Boot Manager
- PXE boot

System Setup

Using the **System Setup** option, you can configure the BIOS settings, iDRAC settings, and device settings of the system.

You can access system setup by using any one of the following interfaces:

- Graphical User interface — To access go to iDRAC Dashboard, click **Configurations** > **BIOS Settings**.
- Text browser — To enable the text browser, use the Console Redirection.

To view
System Setup, power on the system, press F2, and click **System Setup Main Menu**.

NOTE: If the operating system begins to load before you press F2, wait for the system to finish booting, and then restart the system and try again.

The options on the
System Setup Main Menu screen are described in the following table:

Table 48. System Setup Main Menu

Option	Description
System BIOS	Enables you to configure the BIOS settings.
iDRAC Settings	Enables you to configure the iDRAC settings. The iDRAC utility is an interface to set up and configure the iDRAC parameters . You can enable or disable various iDRAC parameters by using the iDRAC utility. For more information about this utility, *Integrated Dell Remote Access Controller User's Guide* at PowerEdge Manuals.
Device Settings	Enables you to configure device settings for devices such as storage controllers or network cards.
Service Tag Settings	Enables you to configure the System Service Tag.

System BIOS

See the common options of the System BIOS here: Support for General Solution Resources | Documentation | Dell US > **Manuals and Documents** > **Set up BIOS on 17th Generation Dell PowerEdge Servers.**

iDRAC Settings

The iDRAC settings is an interface to set up and configure the iDRAC parameters by using UEFI. You can enable or disable various iDRAC parameters by using the iDRAC settings.

NOTE: Accessing some of the features on the iDRAC settings needs the iDRAC Enterprise License upgrade.

For more information about using iDRAC, see *Dell Integrated Dell Remote Access Controller User's Guide* at iDRAC Manuals.

Device Settings

Device Settings enables you to configure device parameters such as storage controllers or network cards.

Boot Manager

The **Boot Manager** option enables you to select boot options and diagnostic utilities.

To enter **Boot Manager**, power on the system and press F11.

Table 49. Boot Manager details

Option	Description
Continue Normal Boot	The system attempts to boot to devices starting with the first item in the boot order. If the boot attempt fails, the system continues with the next item in the boot order until the boot is successful or no more boot options are found.
One-shot UEFI Boot Menu	Enables you to access the boot menu, where you can select a one-time boot device to boot from.
Launch System Setup	Enables you to access System Setup.
System Utilities	Enables you to launch the System Utilities menu such as Launch Diagnostics, BIOS update File Explorer, Reboot System.

PXE boot

You can use the Preboot Execution Environment (PXE) option to boot and configure the networked systems remotely.

To access the **PXE boot** option, boot the system and then press F12 during POST instead of using standard Boot Sequence from BIOS Setup. It does not pull any menu or allows managing of network devices.

6

Minimum to POST and system management configuration validation

This section describes the minimum to POST system requirement and system management configuration validation of the Dell system.

Topics:

- Minimum configuration to POST

Minimum configuration to POST

The components listed below are the minimum configuration to POST:

- One processor
- One memory modules (DIMM) in slot A1
  1. Only 32 GB allowed for 1DIMM per one Intel® Xeon® 6 processor E- core processor, with limited features.
  2. Only 16 GB or 32 GB allowed for 1DIMM per one Intel® Xeon® 6 processor P- core processor, with limited features.
- One power supply unit
- Host Processor Module (HPM)
- Fan board
- Power Interposer board (PIB)
- DC-SCM
- Intrusion cable kit

NOTE: The HPM was formerly called as system board.

7

Configuration validation

The new generation of Dell systems have added interconnect flexibility and advanced iDRAC management features to collect precise system configuration information and report configuration errors.

When the system is powered on, information about installed cables, risers, backplanes, power supplies, floating card (fPERC, adapter PERC, BOSS), and processor is obtained from the CPLD and backplane memory maps are analyzed. This information forms a unique configuration, which is compared with one of the qualified configurations that are stored in a table maintained by iDRAC.

One or more sensors are assigned to each of the configuration elements. During POST, any configuration validation error is logged in the System Event Log (SEL) log. The reported events are categorized in the configuration validation error table.

Table 50. Configuration validation error

Error	Description	Possible cause and recommendations	Example
Config Error	A configuration element within the closest match contains something that is unexpected and does not match any Dell qualified configuration.	Wrong configuration	Config Error: Backplane cable CTRS_SRC_SA1 and BP-DST_SA1
		The element reported in HWC8010 errors are assembled incorrectly. Verify element (cable, risers, etc) placement in the system.	Config Error : SL Cable PLANAR_SL2 and CTRL_DST_PA1
Config Missing	iDRAC found a configuration element missing within the closest match detected.	Missing or damaged cable, device, or part	Config Missing: Float card front PERC/HBA, adapter PERC/HBA
		Missing element or cable is reported in HWC8010 error logs. Install the missing element (cable, risers, etc).	Config Missing : SL cable PLANAR_SL8 and CTRL_DST_PA1
Comm Error	A configuration element is not responding to iDRAC using the management interface while running an inventory check.	System management sideband communication	Comm Error: Backplane 2
		Unplug AC Power, reseat the element and replace the element if the problem persists.	

8

Disassembly and reassembly

Topics:

- Safety instructions
- Before working inside your system
- After working inside your system
- Recommended tools
- Optional front bezel
- System cover
- Air shroud
- Cooling fans
- Drive backplane cover
- Drives
- Removing a 3.5-inch drive blank
- Installing a 3.5-inch drive blank
- Removing a 3.5-inch drive carrier
- Removing a 3.5-inch drive from the drive carrier
- Installing a 3.5-inch drive into the drive carrier
- Installing a 3.5-inch drive carrier
- Rear Drives
- Drive backplane
- Side wall brackets
- Middle bracket
- Cable routing
- System memory
- Processor and heat sink
- PERC cards
- Expansion cards and expansion card risers
- M.2 SSD module
- Optional M.2 Interposer board
- Optional BOSS-N1 DC-MHS module
- Optional OCP NIC card
- Datacenter-Secure Control Module (DC-SCM)
- Attic board
- Internal USB
- System battery
- Intrusion switch
- Power supply unit
- DB9+RJ45 module
- Trusted Platform Module
- HPM board
- Control panel

Safety instructions

CAUTION: Whenever you need to lift the system, get others to assist you. To avoid injury, do not attempt to lift the system by yourself.

CAUTION: Ensure that two or more people lift the system horizontally from the box and place it on a flat surface, rack lift, or into the rails.

WARNING: Opening or removing the system cover while the system is powered on may expose you to a risk of electric shock.

WARNING: Do not operate the system without the cover for a duration exceeding five minutes. Operating the system without the system cover can result in component damage.

CAUTION: Many repairs may only be done by a certified service technician. You should only perform troubleshooting and simple repairs as authorized in your product documentation, or as directed by the online or telephone service and support team. Damage due to servicing that is not authorized by Dell is not covered by your warranty. Read and follow the safety instructions that are shipped with your product.

NOTE: It is recommended that you always use an antistatic mat and antistatic strap while working on components inside the system.

CAUTION: To ensure proper operation and cooling, all system bays and fans must always be populated with a component or a blank.

NOTE: Only use certified Optical Fiber Transceiver Class I Laser Products.

CAUTION: Do not install GPUs, network cards, or other PCIe devices on your system that are not validated and tested by Dell. Damage caused by unauthorized and invalidated hardware installation will null and void the system warranty.

Before working inside your system

Prerequisites

Follow the safety guidelines listed in the Safety instructions.

Steps

1. Power off the system and all attached peripherals.
2. Disconnect the system from the electrical outlet and disconnect the peripherals.
3. If applicable, remove the system from the rack.
   For more information, see the *Rail Installation Guide* relevant to your rail solutions at PowerEdge manuals.
4. Remove the system cover.
   NOTE: While removing the hot-swappable components from the front or rear of the system, do not remove the system cover.

After working inside your system

Prerequisites

Follow the safety guidelines listed in Safety instructions.

Steps

1. Replace the system covers.
2. If applicable, install the system into the rack.
   For more information, see the *Rail Installation Guide* relevant to your system at PowerEdge manuals.
3. Reconnect the peripherals and connect the to the electrical outlet, and then power on the system.

Recommended tools

You may need some or all of the following tools to perform the removal and installation procedures:

- Key to the bezel lock. The key is required only if your system includes a bezel.
- Phillips 1 screwdriver
- Phillips 2 screwdriver
- Torx T6 screwdriver
- Torx T30 screwdriver
- Plastic scribe
- 1/4-inch flat blade screwdriver
- Wrist grounding strap connected to the ground
- ESD mat
- Needle-nose pliers

Optional front bezel

Removing the front bezel

Prerequisites

1. Follow the safety guidelines listed in the Safety instructions.
2. Keep the bezel key handy.

NOTE: The bezel key is part of the bezel package.

Steps

1. Rotate the key clockwise to unlock the bezel.
2. Press the release button, and disengage the left end of the bezel.
3. Unhook the right end, and remove the bezel.

Figure 36. Removing the front bezel

NOTE: The front bezel is not available on a front I/O configuration system.

Next steps

Replace front bezel.

Installing the front bezel

Prerequisites

1. Follow the safety guidelines listed in the Safety instructions.
2. Locate and remove the bezel key.

NOTE: The bezel key is part of the bezel package.

Steps

1. Align and insert the tabs on the bezel into the slots on the system.
2. Press the bezel until the release button clicks in place.
3. Rotate the key anti-clockwise to lock the bezel.

Figure 37. Installing the front bezel

System cover

Removing the system cover

Prerequisites

1. Follow the safety guidelines listed in the Safety instructions.
2. Power off the system, and any attached peripherals.
3. Disconnect the system from the electrical outlet and peripherals.

Steps

1. Using a 1/4-inch flat head or a Phillips 2 screwdriver, rotate the lock counterclockwise to the unlocked position.
2. Lift the release latch until the system cover slides back.
3. Lift the cover from the system.

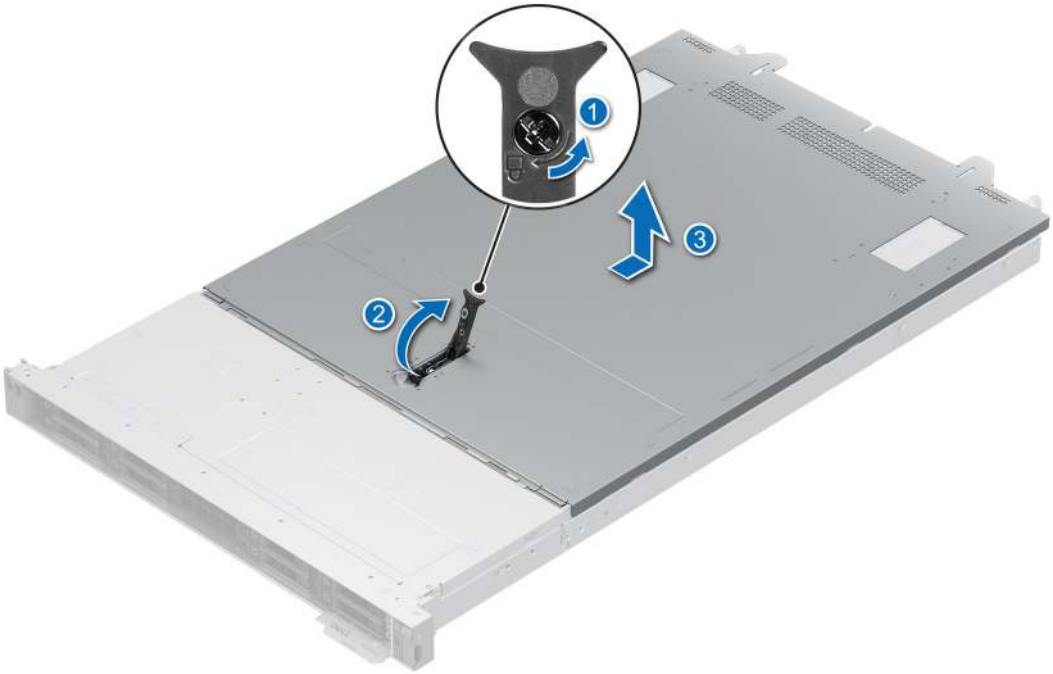

Figure 38. Removing the system cover

Next steps

Replace the system cover.

Installing the system cover

Prerequisites

1. Follow the safety guidelines listed in the Safety instructions.
2. Follow the procedure listed in Before working inside your system.
3. Ensure that all internal cables are connected and routed properly, and no tools or extra parts are left inside the system.

Steps

1. Align the tabs on the system cover with the guide slots on the system and slide the system cover.
2. Close the system cover release latch.
3. Using a 1/4-inch flat head or Phillips 2 screwdriver, rotate the lock clockwise to the lock position.

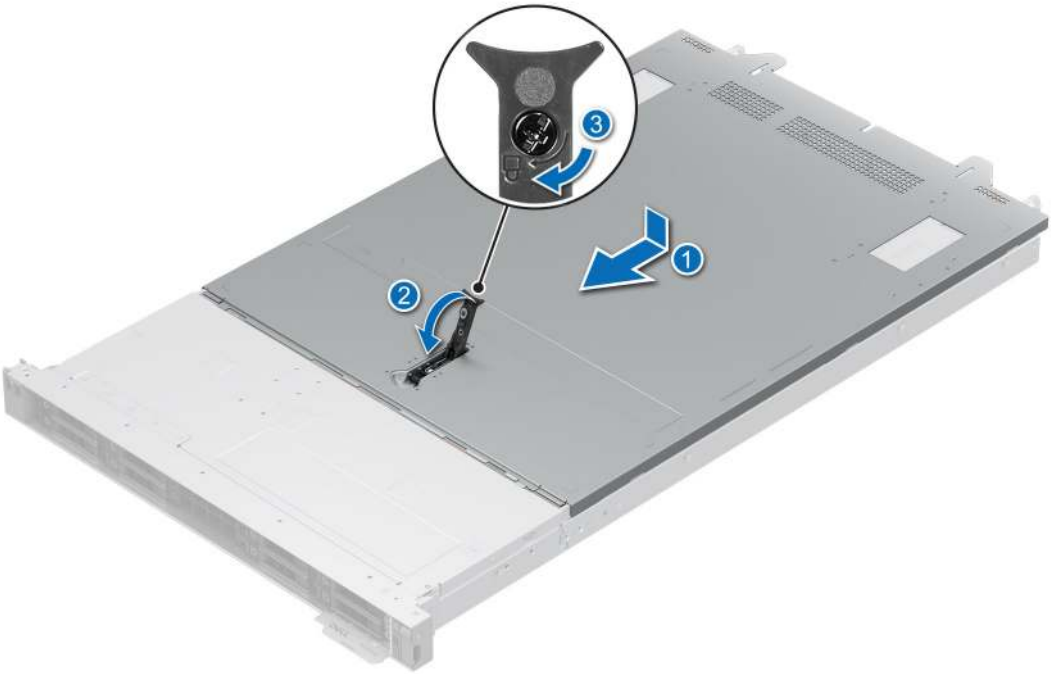

Figure 39. Installing the system cover

Next steps

Follow the procedure listed in After working inside your system.

Air shroud

Removing the air shroud

Prerequisites

1. Follow the safety guidelines listed in the Safety instructions.
2. Follow the procedure listed in Before working inside your system.
3. Remove the system cover

Steps

Holding the sides lift the air shroud out of the system.

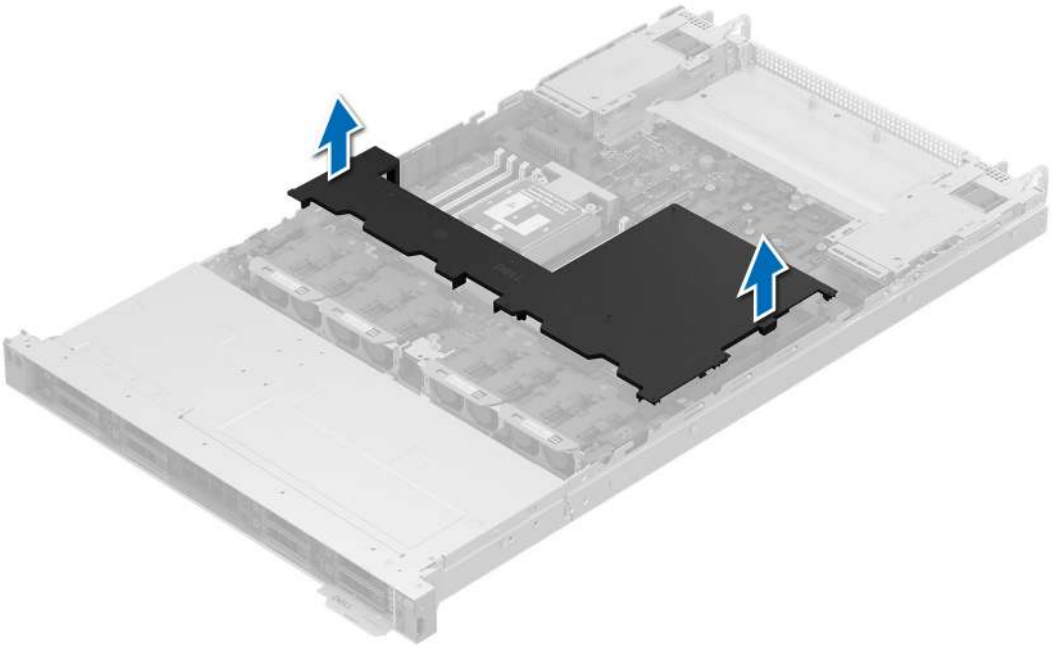

Figure 40. Removing the air shroud

Next steps

Replace the air shroud.

Installing the air shroud

Prerequisites

1. Follow the safety guidelines listed in the Safety instructions.
2. Follow the procedure listed in Before working inside your system.

Steps

Align and lower the air shroud till it is firmly seated in the system .

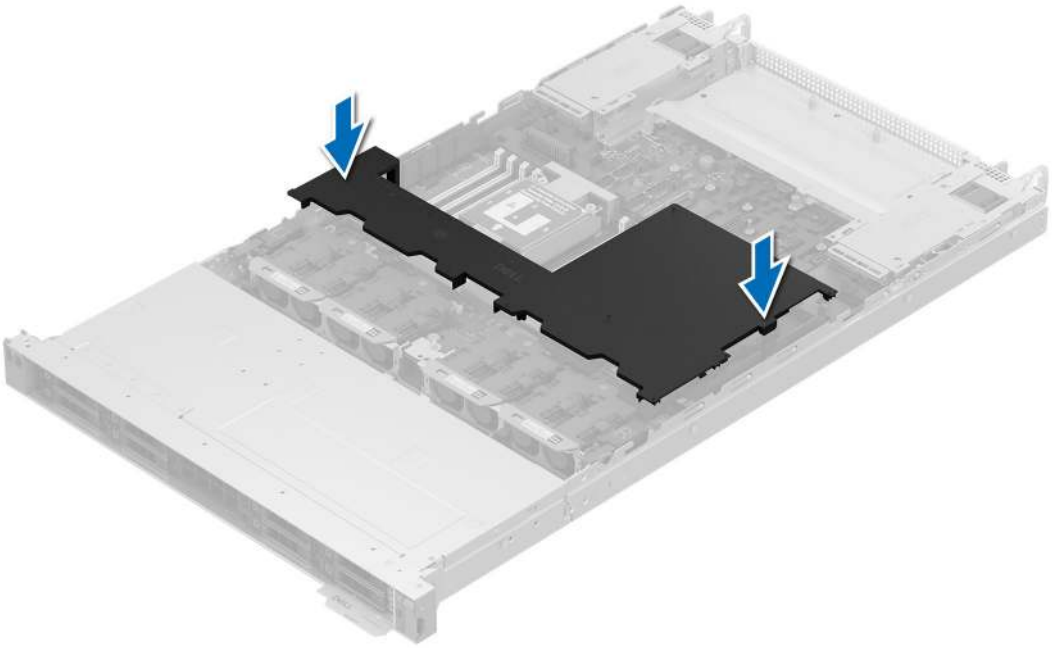

Figure 41. Installing the air shroud

Next steps

Follow the procedure listed in After working inside your system.

Cooling fans

Removing a cooling fan

Prerequisites

1. Follow the safety guidelines listed in the Safety instructions.
2. Follow the procedure listed in Before working inside your system.
3. Remove the system cover

Steps

Holding the orange and black edges on the fan module, lift the cooling fan module to disconnect from the connector on the fan board.

Figure 42. Removing a cooling fan

Next steps

Replace a cooling fan.

Installing a cooling fan

Prerequisites

1. Follow the safety guidelines listed in the Safety instructions.
2. Follow the procedure listed in Before working inside your system.

Steps

1. Align and lower the cooling fan onto the connector on the fan board.
2. Press the orange touch point on the cooling fan module until it is firmly connected.

Figure 43. Installing a cooling fan

Next steps

Follow the procedure listed in After working inside your system.

Drive backplane cover

Removing the drive backplane cover

Prerequisites

1. Follow the safety guidelines listed in the Safety instructions.
2. Follow the procedure listed in Before working inside your system.
3. Remove the system cover .

Steps

1. Slide the drive backplane cover in the direction of the arrows marked on the drive backplane cover.
2. Lift the drive backplane cover from the system.

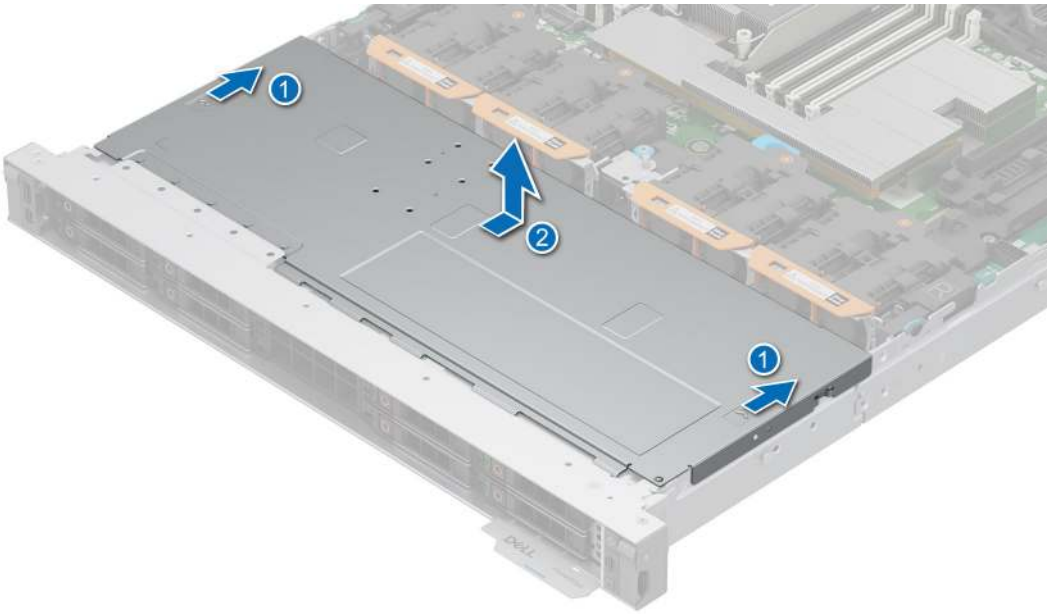

Figure 44. Removing the drive backplane cover

Next steps

1. Replace the drive backplane cover.
2. Replace the system cover

Installing the drive backplane cover

Prerequisites

1. Follow the safety guidelines listed in the Safety instructions.
2. Follow the procedure listed in Before working inside your system.
3. Remove the system cover.

Steps

1. Align the drive backplane cover with the guide slots on the system.
2. Slide the drive backplane cover to the front of the system until the drive backplane cover fits into place.

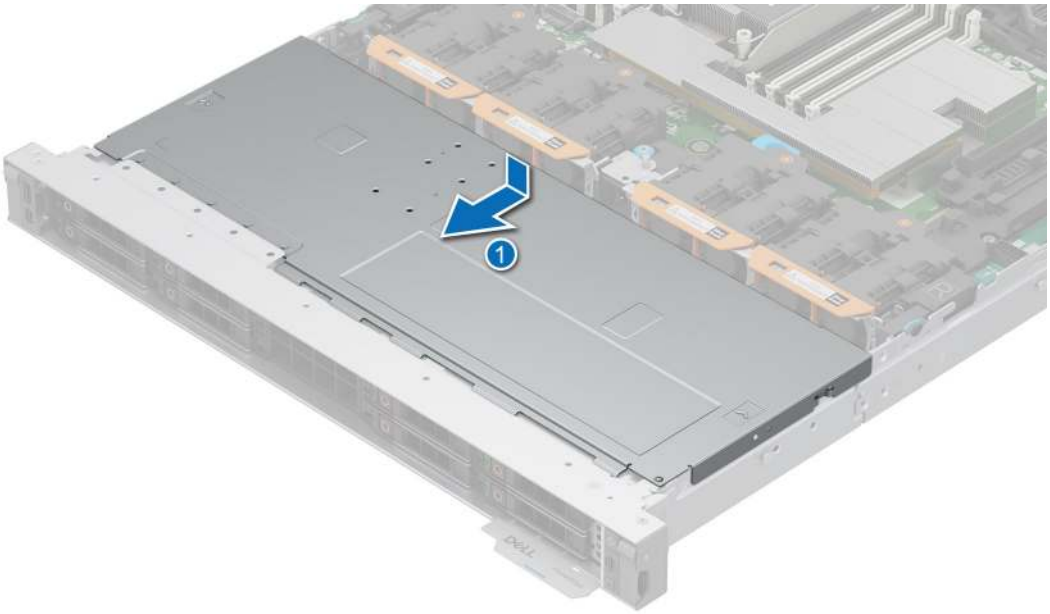

Figure 45. Installing the drive backplane cover

Next steps

1. Follow the procedure listed in After working inside your system.
2. Replace the system cover.

Drives

Removing an EDSFF E3.S drive blank

Prerequisites

1. Follow the safety guidelines listed in the Safety instructions.

CAUTION: To maintain proper system cooling, drive blanks must be installed in all empty drive slots.

Steps

Lift the release button, and slide the drive blank out of the drive slot.

Figure 46. Removing an EDSFF E3.S drive blank

Next steps

1. Replace the EDSFF E3.S drive blank.

Installing an EDSFF E3.S drive blank

Prerequisites

1. Follow the safety guidelines listed in the Safety instructions.

Steps

Slide the drive blank into the drive slot until the release button clicks into place.

Figure 47. Installing an EDSFF E3.S drive blank

Removing an EDSFF E3.S drive carrier

Prerequisites

1. Follow the safety guidelines listed in Safety instructions.
2. Using the management software, prepare the drive for removal. If the drive is online, the green activity or fault indicator flashes while the drive is turning off. When the drive indicators are off, the drive is ready for removal. For more information, see the storage controller documentation.

CAUTION: Before attempting to remove or install a drive while the system is running, see the documentation for the storage controller card to ensure that the host adapter is configured correctly to support drive removal and insertion.

CAUTION: To prevent data loss, ensure that your operating system supports drive installation. See the documentation supplied with your operating system.

Steps

1. Lift the release button to open the drive carrier release handle.
2. Holding the drive carrier release handle, slide the drive carrier out of the drive slot.

NOTE: If you are not replacing the drive immediately, install an EDSFF E3.S drive blank in the empty drive slot to maintain proper system cooling.

Figure 48. Removing an EDSFF E3.S drive carrier

Next steps

Replace the EDSFF E3.S drive or install the EDSFF E3.S drive blank.

Removing an EDSFF E3.S drive from the drive carrier

Prerequisites

1. Follow the safety guidelines listed in the Safety instructions.
2. Remove the drive carrier.

Steps

1. Using a Torx 6 screwdriver, remove the screws from the slide rails on the drive carrier.
2. Lift the drive out of the drive carrier.

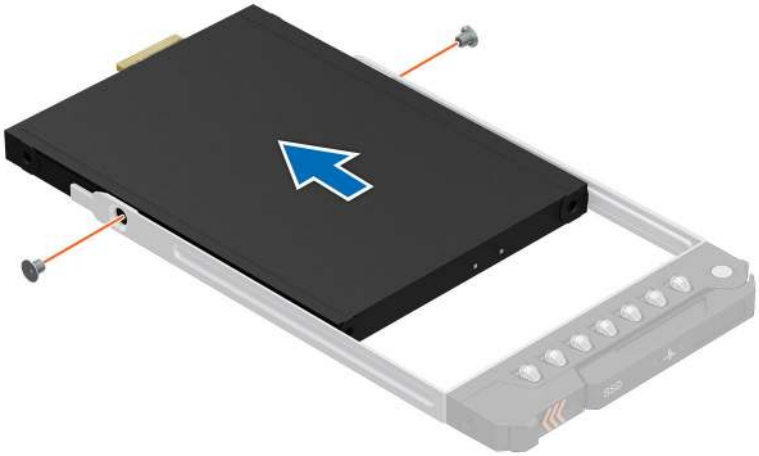

Figure 49. Removing an EDSFF E3.S drive from the drive carrier

Next steps

Install an EDSFF E3.S drive into the drive carrier.

Installing an EDSFF E3.S drive into the drive carrier

Prerequisites

1. Follow the safety guidelines listed in the Safety instructions.
2. Remove an EDSFF E3.S drive carrier.

Steps

1. Insert the drive into the drive carrier with the drive connector facing towards the rear of the carrier.
2. Align the screw holes on the drive with the screw holes on the drive carrier.
3. Using a Torx 6 screwdriver, secure the drive to the drive carrier with the screws.

   NOTE: When installing a drive into the drive carrier, ensure that the screws are torqued to 4 in-lbf.

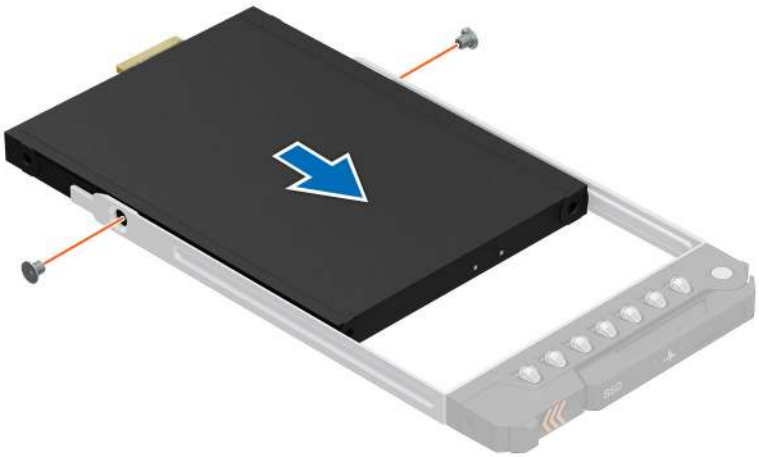

Figure 50. Installing an EDSFF E3.S drive into the drive carrier

Next steps

1. Install the drive carrier.

Installing an EDSFF E3.S drive carrier

Prerequisites

CAUTION: Before removing or installing a drive while the system is running, see the Storage Controller Manuals documentation for the storage controller card to ensure that the host adapter is configured correctly to support drive removal and insertion.

CAUTION: Combining SAS and SATA drives in the same RAID volume is not supported.

CAUTION: When installing a drive, ensure that the adjacent drives are fully installed. Inserting a drive carrier and attempting to lock its handle next to a partially installed carrier can damage the partially installed carrier's shield spring and make it unusable.

NOTE: Ensure that the drive carrier's release handle is in the open position before inserting the carrier into the slot.

CAUTION: To prevent data loss, ensure that your operating system supports hot-swap drive installation. See the documentation supplied with your operating system.

CAUTION: When a replacement hot swappable drive is installed and the system is powered on, the drive automatically begins to rebuild. Ensure that the replacement drive is blank or contains data that you wish to overwrite. Any data on the replacement drive is immediately lost after the drive is installed.

1. Follow the safety guidelines listed in Safety instructions.
2. Remove the drive carrier or remove the drive blank when you want to assemble the drive into the system.

Steps

1. Slide the drive carrier into the drive slot and push until the drive connects with the backplane.
2. Close the drive carrier release handle to lock the drive in place.

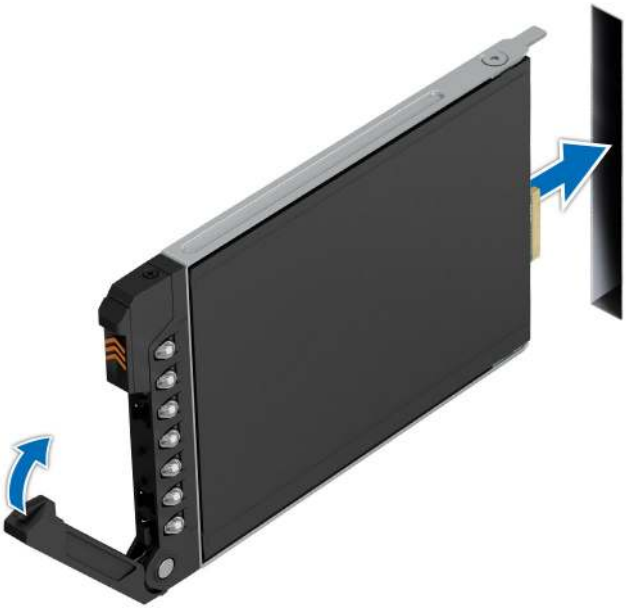

Figure 51. Installing an EDSFF E3.S drive carrier

Removing a 2.5-inch drive blank

Prerequisites

1. Follow the safety guidelines listed in the Safety instructions.

CAUTION: To maintain proper system cooling, drive blanks must be installed in all empty drive slots.

Steps

Press the release button, and slide the drive blank out of the drive slot.

Figure 52. Removing a 2.5-inch drive blank

Next steps

1. Replace the2.5-inch drive blank.

Installing a 2.5-inch drive blank

Prerequisites

1. Follow the safety guidelines listed in the Safety instructions.

Steps

Insert the drive blank into the drive slot, and push the blank until the release button clicks into place.

Figure 53. Installing a 2.5-inch drive blank

Removing a 2.5-inch drive carrier

Prerequisites

1. Follow the safety guidelines listed in Safety instructions.
2. Using the management software, prepare the drive for removal. If the drive is online, the green activity or fault indicator flashes while the drive is turning off. When the drive indicators are off, the drive is ready for removal. For more information, see the storage controller documentation.

CAUTION: Before attempting to remove or install a drive while the system is running, see the documentation for the storage controller card to ensure that the host adapter is configured correctly to support drive removal and insertion.

CAUTION: To prevent data loss, ensure that your operating system supports drive installation. See the documentation supplied with your operating system.

Steps

1. Press the release button to open the drive carrier release handle.
2. Holding the handle, slide the drive carrier out of the drive slot.

NOTE: The numbers on the image do not depict the exact steps. The numbers are for representation of sequence.

Figure 54. Removing a 2.5-inch drive carrier

Next steps

Replace the 2.5-inch drive or install the 2.5-inch drive blank.

Removing a 2.5-inch drive from the drive carrier

Prerequisites

1. Follow the safety guidelines listed in the Safety instructions.
2. Remove the drive carrier.

Steps

1. Using a Phillips #1 screwdriver, remove the screws from the slide rails on the drive carrier.

   NOTE: If the hard drive or SSD carrier has a Torx screw, use Torx 6 (for 2.5-inch drive) screwdriver to remove the drive.

2. Lift the drive out of the drive carrier.

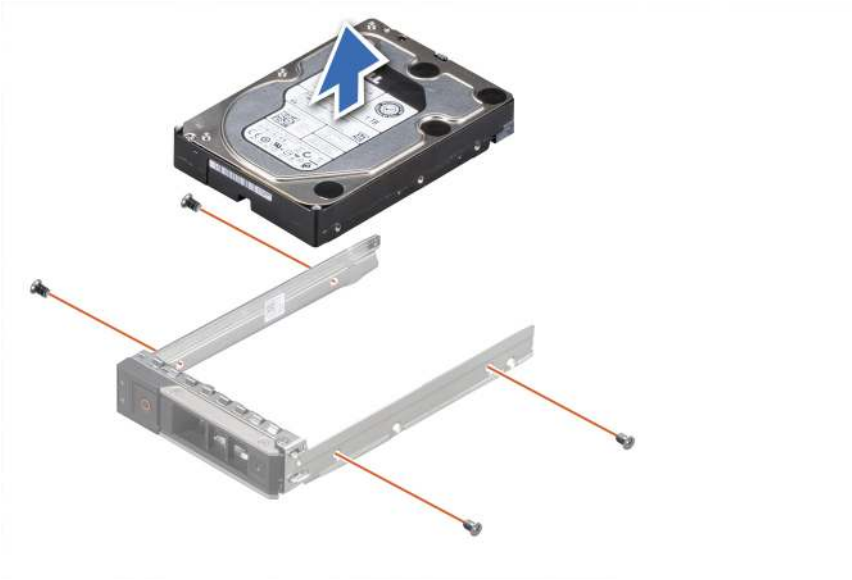

Figure 55. Removing the 2.5-inch drive from the drive carrier

Next steps

Install a 2.5-inch drive into the drive carrier.

Installing a 2.5-inch drive into the drive carrier

Prerequisites

1. Follow the safety guidelines listed in the Safety instructions.
2. Remove the drive carrier.

Steps

1. Insert the drive into the drive carrier with the connector end of the drive towards the back of the carrier.
2. Align the screw holes on the drive with the screw holes on the drive carrier.
3. Using a Phillips #1 screwdriver, replace the screws to secure the drive to the drive carrier.

   NOTE: If the hard drive or SSD carrier has a Torx screw, use Torx 6 (for 2.5-inch drive) screwdriver to install the drive.

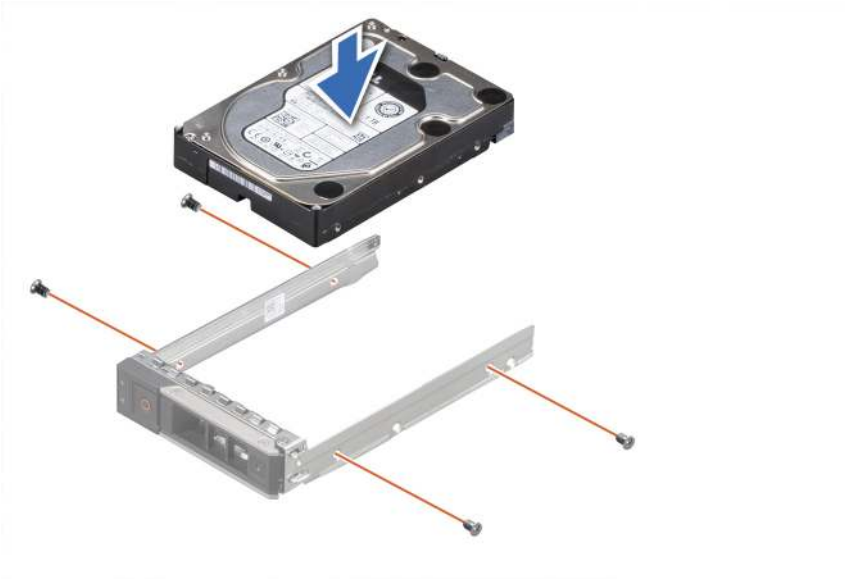

Figure 56. Installing a drive into the drive carrier

Next steps

1. Install the drive carrier.

Installing a 2.5-inch drive carrier

Prerequisites

CAUTION: Before removing or installing a drive while the system is running, see the Storage Controller Manuals documentation for the storage controller card to ensure that the host adapter is configured correctly to support drive removal and insertion.

CAUTION: Combining SAS and SATA drives in the same RAID volume is not supported.

CAUTION: When installing a drive, ensure that the adjacent drives are fully installed. Inserting a drive carrier and attempting to lock its handle next to a partially installed carrier can damage the partially installed carrier's shield spring and make it unusable.

NOTE: Ensure that the drive carrier's release handle is in the open position before inserting the carrier into the slot.

CAUTION: To prevent data loss, ensure that your operating system supports hot-swap drive installation. See the documentation supplied with your operating system.

CAUTION: When a replacement hot swappable drive is installed and the system is powered on, the drive automatically begins to rebuild. Ensure that the replacement drive is blank or contains data that you wish to overwrite. Any data on the replacement drive is immediately lost after the drive is installed.

1. Follow the safety guidelines listed in Safety instructions.
2. Remove the drive carrier or remove the drive blank when you want to assemble the drive into the system.

Steps

1. Press the release button on the front of the drive carrier to open the release handle.
2. Insert and slide the drive carrier into the drive slot.
3. Close the drive carrier release handle until it clicks in place.

   NOTE: The numbers on the image do not depict the exact steps. The numbers are for representation of sequence.

Figure 57. Installing a 2.5-inch drive carrier

Removing a 3.5-inch drive blank

Prerequisites

1. Follow the safety guidelines listed in the Safety instructions.
2. If installed, remove the front bezel.

CAUTION: To maintain proper system cooling, drive blanks must be installed in all empty drive slots.

Steps

Press the release button, and slide the drive blank out of the drive slot.

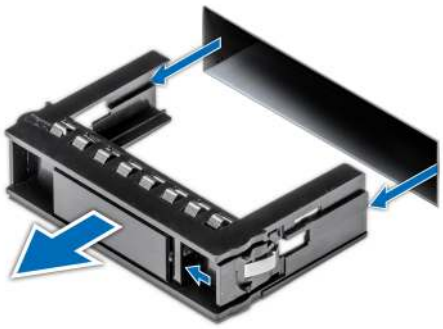

Figure 58. Removing a 3.5-inch drive blank

Next steps

1. Replace the 3.5-inch drive blank.

Installing a 3.5-inch drive blank

Prerequisites

1. Follow the safety guidelines listed in the Safety instructions.
2. If installed, remove the front bezel.

Steps

Insert the drive blank into the drive slot, and push the blank until the release button clicks into place.

Figure 59. Installing a 3.5-inch drive blank

Next steps

1. If removed, install the front bezel.

Removing a 3.5-inch drive carrier

Prerequisites

1. Follow the safety guidelines listed in Safety instructions.
2. remove the front bezel.
3. Using the management software, prepare the drive for removal. If the drive is online, the green activity or fault indicator flashes while the drive is turning off. When the drive indicators are off, the drive is ready for removal. For more information, see the storage controller documentation.

CAUTION: Before attempting to remove or install a drive while the system is running, see the documentation for the storage controller card to ensure that the host adapter is configured correctly to support drive removal and insertion.

CAUTION: To prevent data loss, ensure that your operating system supports drive installation. See the documentation supplied with your operating system.

Steps

1. Press the release button to open the drive carrier release handle.
2. Holding the handle, slide the drive carrier out of the drive slot.

NOTE: The numbers on the image do not depict the exact steps. The numbers are for representation of sequence.

Figure 60. Removing a 3.5-inch drive carrier

Next steps

Replace the 3.5-inch drive or install the 3.5-inch drive blank.

Removing a 3.5-inch drive from the drive carrier

Prerequisites

1. Follow the safety guidelines listed in the Safety instructions.
2. Remove the drive carrier.

Steps

1. Using a Phillips #1 screwdriver, remove the screws from the slide rails on the drive carrier.

   NOTE: If the hard drive or SSD carrier has a Torx screw, use Torx 6 (for 3.5-inch drive) screwdriver to remove the drive.

2. Lift the drive out of the drive carrier.

Figure 61. Removing the 3.5-inch drive from the drive carrier

Next steps

Install a 3.5-inch drive into the drive carrier.

Installing a 3.5-inch drive into the drive carrier

Prerequisites

1. Follow the safety guidelines listed in the Safety instructions.
2. Remove the drive carrier.

Steps

1. Insert the drive into the drive carrier with the connector end of the drive towards the back of the carrier.
2. Align the screw holes on the drive with the screw holes on the drive carrier.
3. Using a Phillips #1 screwdriver, replace the screws to secure the drive to the drive carrier.

   NOTE: If the hard drive or SSD carrier has a Torx screw, use Torx 6 (for 3.5-inch drive) screwdriver to install the drive.

Figure 62. Installing a drive into the drive carrier

Next steps

1. Install the drive carrier.

Installing a 3.5-inch drive carrier

Prerequisites

CAUTION: Before removing or installing a drive while the system is running, see the Storage Controller Manuals documentation for the storage controller card to ensure that the host adapter is configured correctly to support drive removal and insertion.

CAUTION: Combining SAS and SATA drives in the same RAID volume is not supported.

CAUTION: When installing a drive, ensure that the adjacent drives are fully installed. Inserting a drive carrier and attempting to lock its handle next to a partially installed carrier can damage the partially installed carrier's shield spring and make it unusable.

NOTE: Ensure that the drive carrier's release handle is in the open position before inserting the carrier into the slot.

CAUTION: To prevent data loss, ensure that your operating system supports hot-swap drive installation. See the documentation supplied with your operating system.

CAUTION: When a replacement hot swappable drive is installed and the system is powered on, the drive automatically begins to rebuild. Ensure that the replacement drive is blank or contains data that you wish to overwrite. Any data on the replacement drive is immediately lost after the drive is installed.

1. Follow the safety guidelines listed in Safety instructions.
2. remove the front bezel.
3. Remove the drive carrier or remove the drive blank when you want to assemble the drive into the system.

Steps

1. Press the release button on the front of the drive carrier to open the release handle.
2. Insert and slide the drive carrier into the drive slot.
3. Close the drive carrier release handle until it clicks in place.

NOTE: The numbers on the image do not depict the exact steps. The numbers are for representation of sequence.

Figure 63. Installing a 3.5-inch drive carrier

Next steps

install the front bezel.

Rear Drives

Removing the rear 2 x EDSFF E3.S module

Prerequisites

1. Follow the safety guidelines listed in the Safety instructions.
2. Follow the procedure listed in the Before working inside your system.
3. Remove the system cover.
4. Remove the rear EDSFF E3.S drives.
5. Disconnect the power cable and other required cables, observe the cable routing.

NOTE: See cable routing section.

Steps

1. Disconnect the cables of rear drive module from the system.
2. Holding the edges lift the rear drive module away from the system

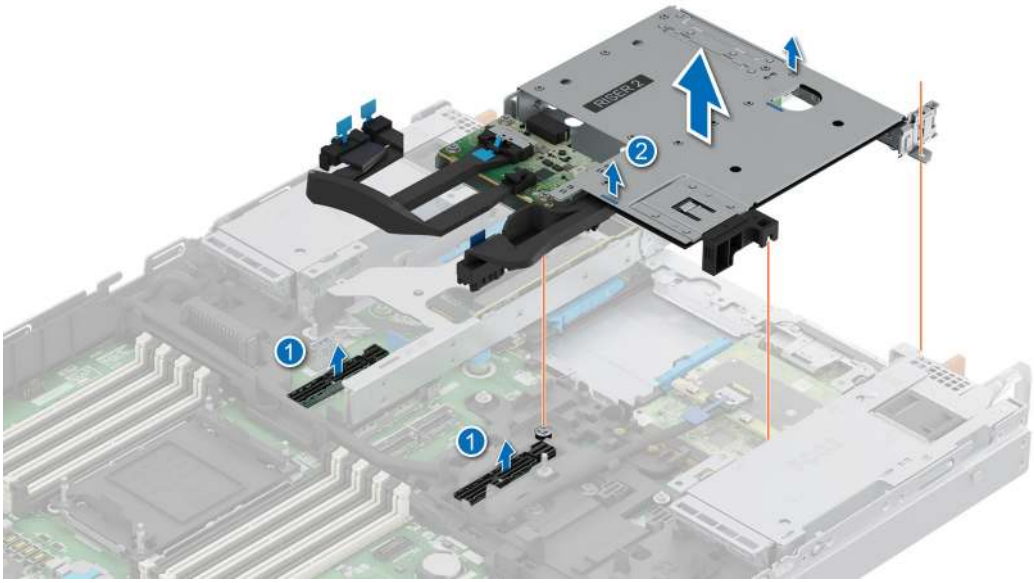

Figure 64. Removing the rear 2 x EDSFF E3.S module

Next steps

1. Replace the rear 4 x EDSFF E3.S module.

Installing the rear 2 x EDSFF E3.S module

Prerequisites

1. Follow the safety guidelines listed in the Safety instructions.
2. Follow the procedure listed in the Before working inside your system.
3. Remove the system cover.
4. Remove the rear EDSFF E3.S drives.
5. Disconnect the power cable and other required cables, observe the cable routing.

NOTE: See cable routing section.

Steps

1. Align the slot on the rear drive module with the guide on the system.
2. Lower and press the rear drive module until firmly seated.

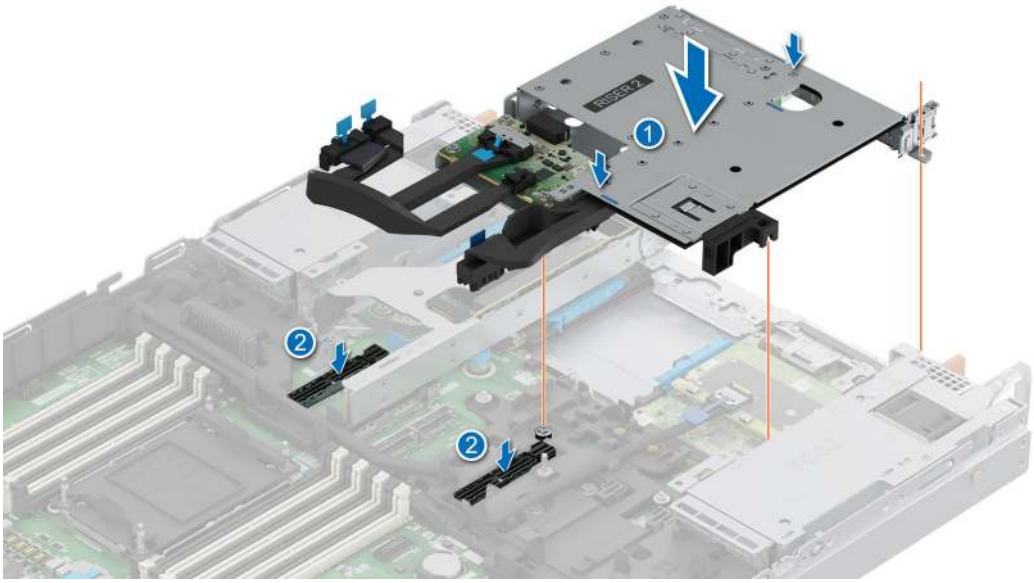

Figure 65. Installing the rear 2 x EDSFF E3.S module

Next steps

1. Connect all the cables, and ensure that all the cables are routed through the respective cable clip.

   NOTE: See cable routing section.

2. install the rear EDSFF E3.S drives.
3. Install the system cover.
4. Follow the procedure listed in After working inside your system.

Drive backplane

This is a service technician replaceable part only.

Drive backplane

Depending on your system configuration, the drive backplanes that are supported are listed here:

Table 51. Supported backplane options

System	Supported drive backplanes
PowerEdge R470	EDSFF E3.S (x8) NVMe backplane
	EDSFF E3.S (x2) NVMe rear backplane
	2.5 inch (x8) SAS/SATA backplane
	2.5 inch (x10) SAS/SATA backplane
	3.5 inch (x4) SAS/SATA backplane

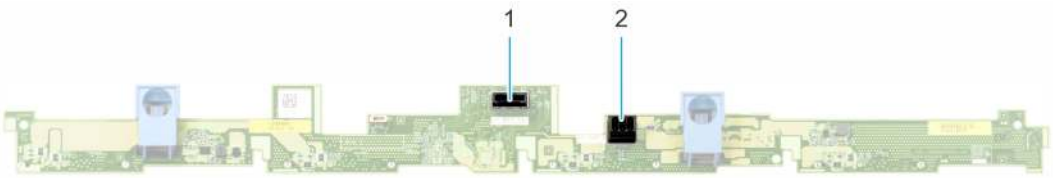

Figure 66. 8 x 2.5-inch drive backplane

1. BP_DST_SA1 (PERC to backplane)
2. BP_PWR_1 (backplane power cable to HPM board)

Figure 67. 10 x 2.5-inch drive backplane

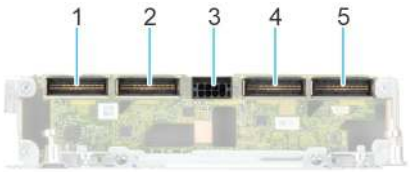

Figure 68. EDSFF E3.S NVMe drive backplane

1. BP_DST_PA2 (PCIe/NVMe connector, connecting to SL8 on the HPM board)
2. BP_DST_PB2 (PCIe/NVMe connector, connecting to SL7 on the HPM board)
3. BP_PWR_CTRL_1 (connecting to power cable on the HPM board)
4. BP_DST_PA1 (PCIe/NVMe connector, connecting to SL4 on the HPM board)
5. BP_DST_PB1 (PCIe/NVMe connector, connecting to SL3 on the HPM board)

Removing the 2.5-inch drive backplane module

Prerequisites

1. Follow the safety guidelines listed in the Safety instructions.
2. Follow the procedure listed in the Before working inside your system.
3. Remove the system cover.
4. Remove the air shroud.
5. Remove the drive backplane cover.
6. If installed Remove the front bezel.
7. Remove the 2.5-inch drives.
8. Disconnect the power cable and other required cables, observe the cable routing.

NOTE: See cable routing section.

About this task

Watch video: Removing the drive backplane.

Steps

1. Pinch and press the release clips on the backplane to disengage it from the system.
2. Lift it towards the rear of the system to remove the backplane.

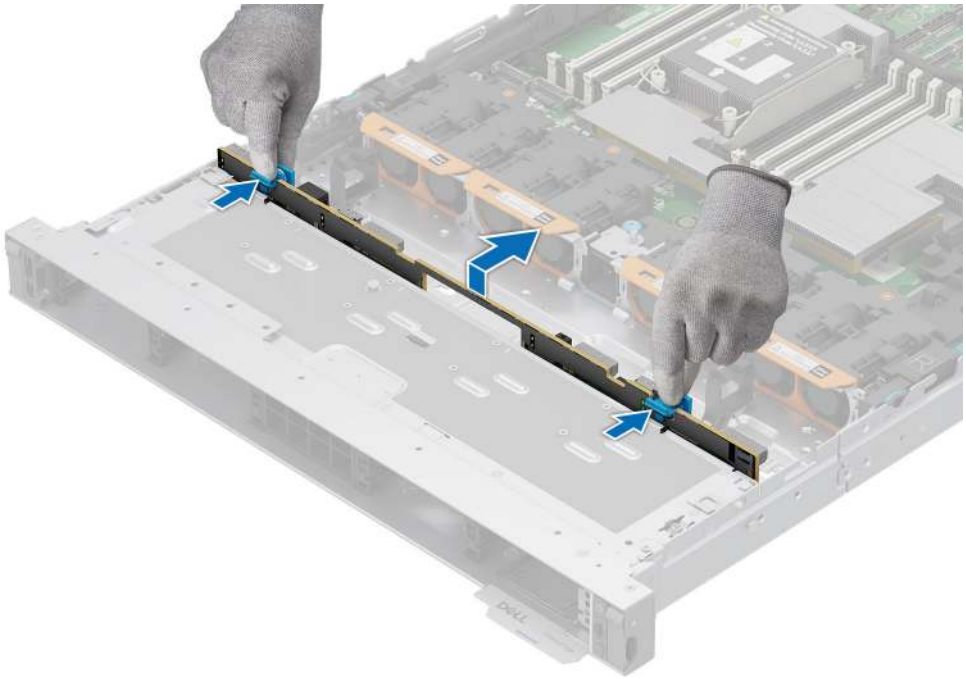

Figure 69. Removing the 2.5 inch drive backplane module

Next steps

1. Replace the 2.5-inch drive backplane module.

Installing the 2.5-inch drive backplane module

Prerequisites

1. Follow the safety guidelines listed in the Safety instructions.
2. Follow the procedure listed in the Before working inside your system.
3. Remove the system cover.
4. Remove the air shroud.
5. Remove the drive backplane cover.
6. If installed Remove the front bezel.
7. Remove the 2.5-inch drives.
8. Disconnect the power cable and other required cables, observe the cable routing.

NOTE: See cable routing section.

About this task

Watch video: Installing the drive backplane.

Steps

1. Align the 2.5-inch drive backplane module with the notches on the system.
2. Pinch and press the release clips on the backplane.
3. Lower the backplane into the system till firmly seated.

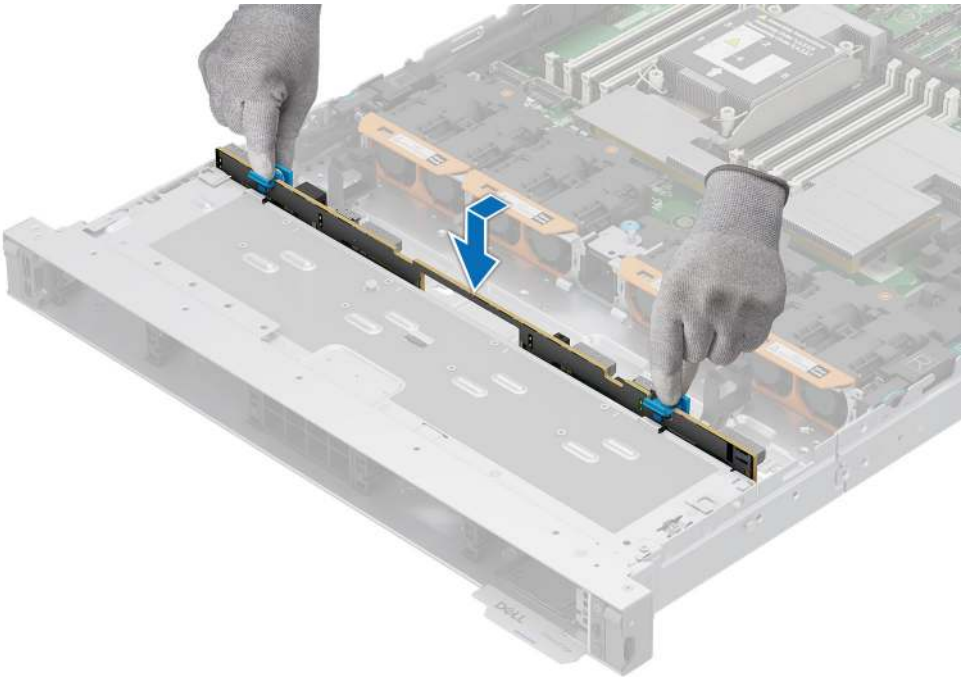

Figure 70. Installing the 2.5-inch drive backplane module

Next steps

1. Connect all the cables, and ensure that all the cables are routed through the respective cable clip.

   NOTE: See cable routing section.

2. install the 2.5-inch drives.
3. If removedInstall the front bezel.
4. Install the drive backplane cover.
5. Install the air shroud.
6. Install the system cover
7. Follow the procedure listed in After working inside your system.

Removing the EDSFF E3.S backplane module

Prerequisites

1. Follow the safety guidelines listed in the Safety instructions.
2. Follow the procedure listed in the Before working inside your system.
3. Remove the system cover.
4. Remove the air shroud.
5. Remove the drive backplane cover.
6. If installed remove the front bezel.
7. Remove the EDSFF E3.S drives.
8. Disconnect the power cable and other required cables, observe the cable routing.

   NOTE: See cable routing section.

Steps

1. Using a Phillips 2 screwdriver, loosen the captive screws on the EDSFF E3.S backplane module.
2. Slide the EDSFF E3.S backplane module towards the front of the server and lift it to remove from the system.

NOTE: The numbers on the image do not depict the exact steps. The numbers are for representation of sequence.

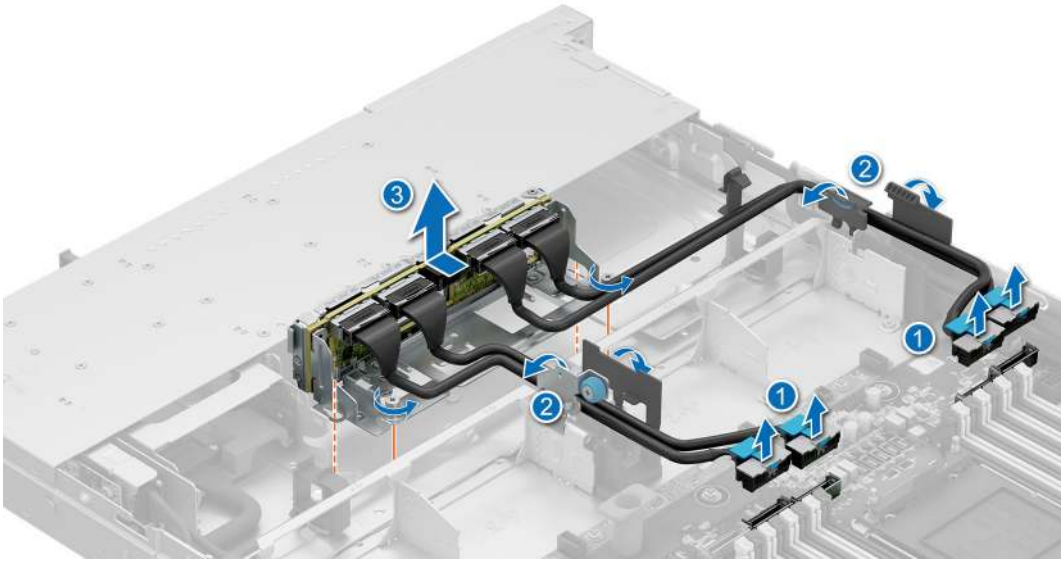

Figure 71. Removing the EDSFF E3.S backplane module

Next steps

1. Replace the EDSFF E3.S backplane module.

Installing the EDSFF E3.S backplane module

Prerequisites

1. Follow the safety guidelines listed in the Safety instructions.
2. Follow the procedure listed in the Before working inside your system.
3. Remove the system cover.
4. Remove the air shroud.
5. Remove the drive backplane cover.
6. If installed Remove the front bezel.
7. Remove the EDSFF E3.S drives.
8. Disconnect the power cable and other required cables, observe the cable routing.

NOTE: See cable routing section.

Steps

1. Align the EDSFF E3.S backplane module with the guide pin on the backplane bracket and position it from the top down, ensuring proper alignment.

   NOTE: Locate and place the EDSFF E3.S backplane module on the unlocked position line.

2. Push the module towards the rear of the server until it is secured in place.
3. Using a Phillips 2 screwdriver, tighten the captive screws to secure the module.

   NOTE: The numbers on the image do not depict the exact steps. The numbers are for representation of sequence.

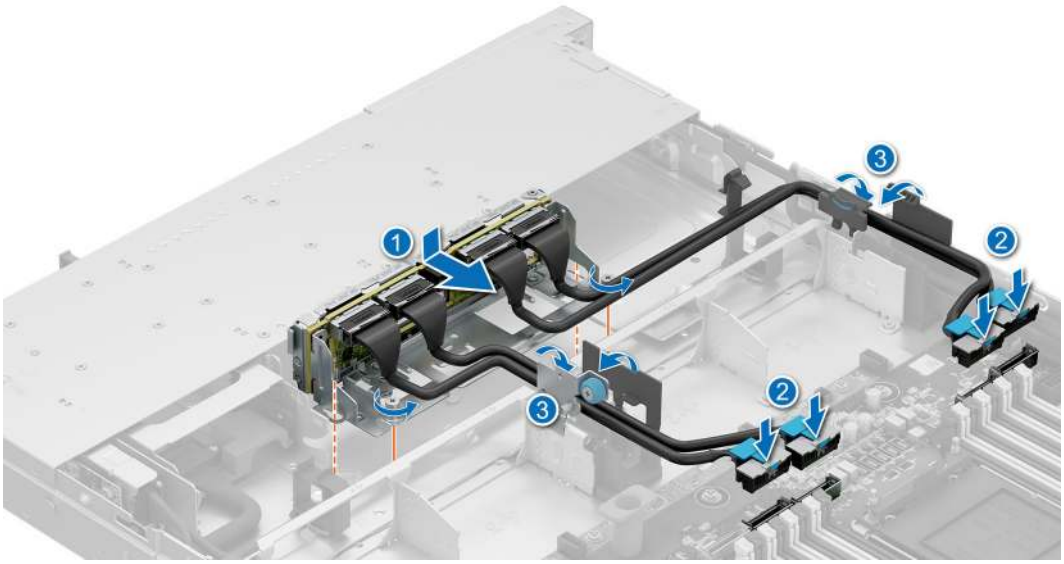

Figure 72. Installing the EDSFF E3.S backplane module

Next steps

1. Connect all the cables, and ensure that all the cables are routed through the respective cable clip.

   NOTE: See cable routing section.

2. install the EDSFF E3.S drives .
3. If removedInstall the front bezel.
4. Install the drive backplane cover.
5. Install theair shroud.
6. Install the system cover
7. Follow the procedure listed in After working inside your system.

Side wall brackets

.

Removing the side wall bracket

There are two side wall brackets on either side of the system. The procedure to remove is similar.

Prerequisites

1. Follow the safety guidelines listed in the Safety instructions.
2. Follow the procedure listed in the Before working inside your system.
3. Remove the system cover.

NOTE: Ensure that you note the routing of the cables as you remove them from the system board. Route the cables properly when you replace them to prevent the cables from being pinched or crimped.

Steps

1. Press the side tabs to release the side wall cable holder.

   NOTE: Move the cables out of the side wall cable holder.

2. Press the center tab to release the bracket from the chassis, and lift it away from the system.

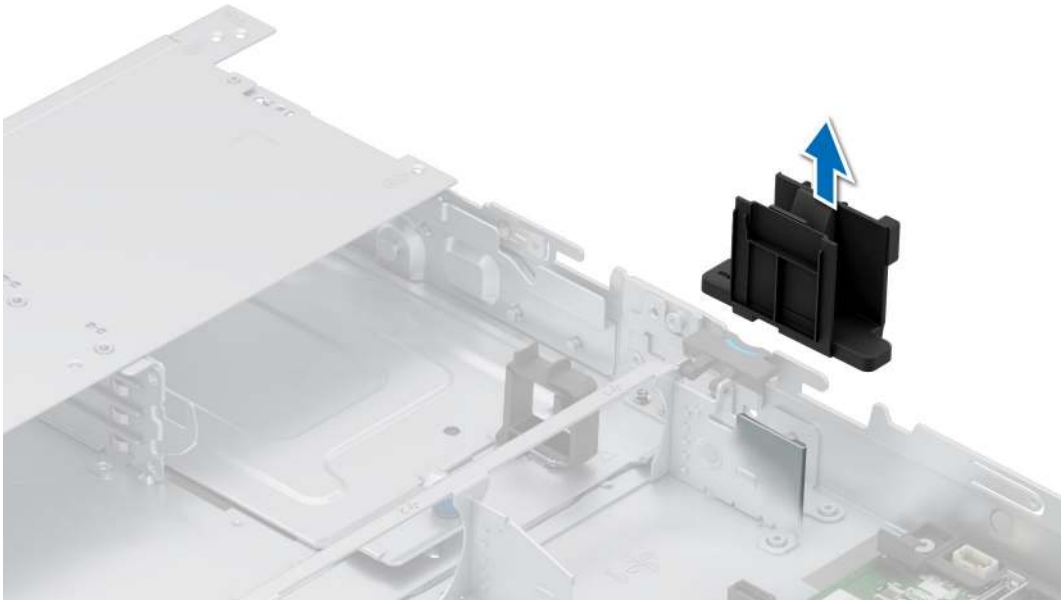

Figure 73. Removing the side wall bracket

Next steps

1. Replace the side wall bracket.

Installing the side wall bracket

There are two side wall brackets on either side of the system. The procedure to install is similar.

Prerequisites

1. Follow the safety guidelines listed in the Safety instructions.
2. Follow the procedure listed in the Before working inside your system.
3. Remove the system cover.

NOTE: Ensure that you note the routing of the cables as you remove them from the system board. Route the cables properly when you replace them to prevent the cables from being pinched or crimped.

Steps

1. Align the guide slots on the side wall bracket with the guides on the system and slide until the cover is seated firmly.

   NOTE: Route the cables through the side wall cable holder.

2. Close the side wall cable holder until the holder clicks into place.

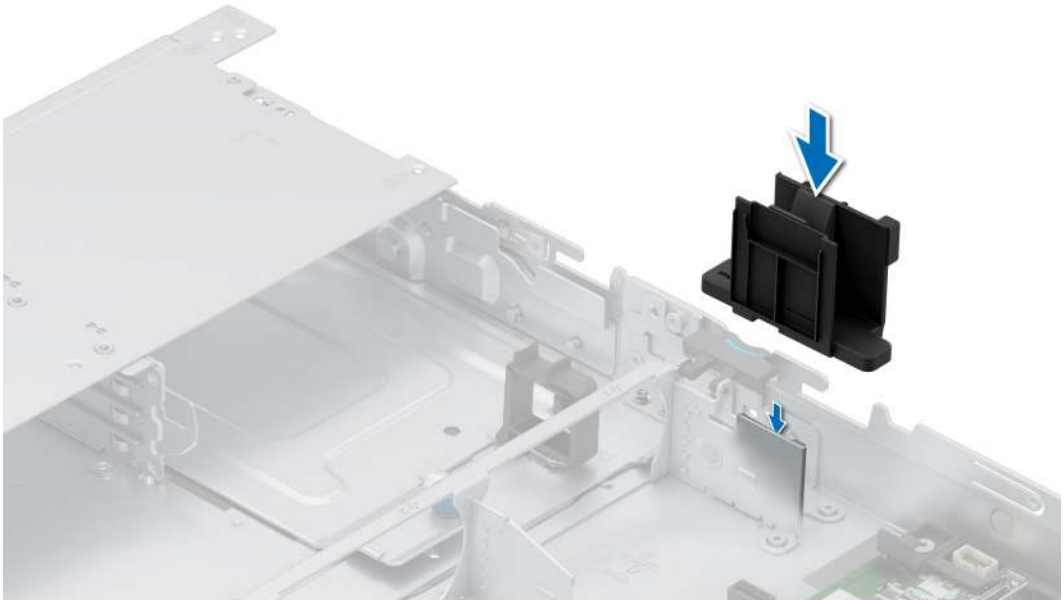

Figure 74. Installing the side wall bracket

Next steps

1. Install the system cover.
2. Follow the procedure listed in the After working inside your system.

Middle bracket

.

Removing the cables from the middle bracket

Prerequisites

1. Follow the safety guidelines listed in the Safety instructions.
2. Follow the procedure listed in the Before working inside your system.

NOTE: Ensure that you note the routing of the cables as you remove them from the system board. Route the cables properly when you replace them to prevent the cables from being pinched or crimped.

Steps

1. Loosen the captive screw using a Phillips 2 screwdriver.
2. Open the middle metal cover and the middle cable holder.

   NOTE: Remove the cables sequentially from top to bottom.

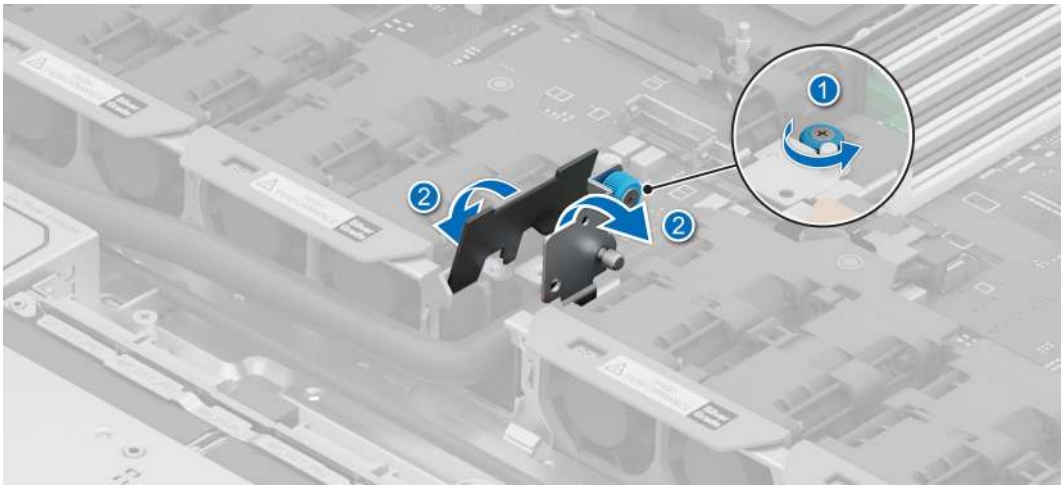

Figure 75. Removing the middle bracket

Next steps

Installing the cables into the middle bracket

Prerequisites

1. Follow the safety guidelines listed in the Safety instructions.
2. Follow the procedure listed in the Before working inside your system.

NOTE: Ensure that you note the routing of the cables as you remove them from the system board. Route the cables properly when you replace them to prevent the cables from being pinched or crimped.

Steps

1. Open the middle metal cover and the middle cable holder.

   NOTE: Route the cables through the middle cable holder.

2. Close the middle cable holder and the metal cover, and fasten the captive screw using a Phillips 2 screwdriver.

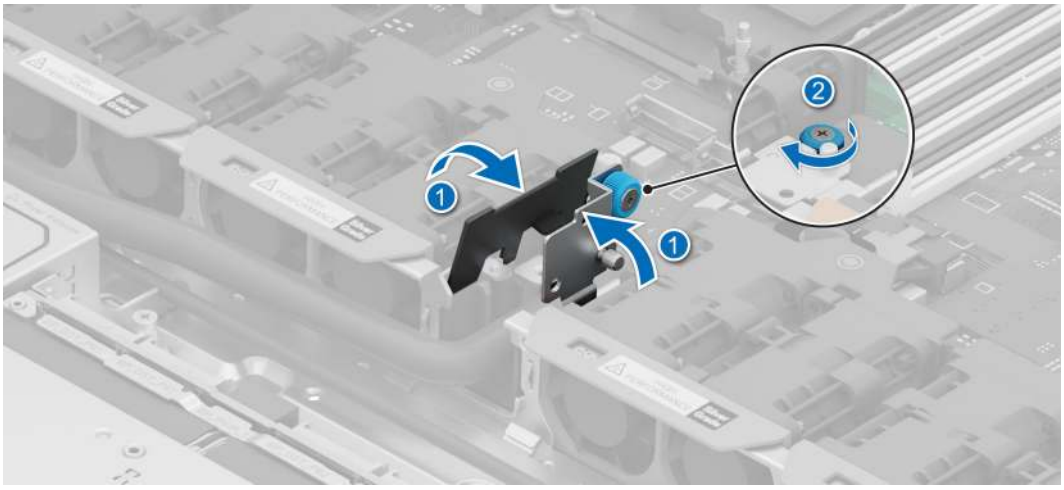

Figure 76. Installing the middle bracket

Next steps

1. Follow the procedure listed in the After working inside your system.

Cable routing

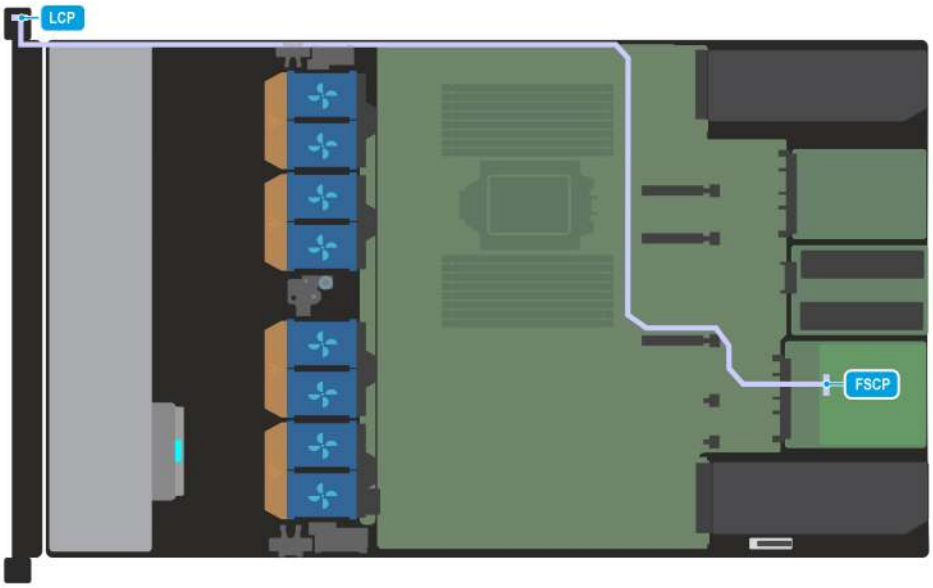

Figure 77. Attic Board to Left Control Panel (LCP) - Seconday (KVM module)

NOTE: Follow the sequential order as shown in the table to remove the cables, to install the cables follow the reverse sequential order.

Table 52. Attic Board to Left Control Panel (LCP) - Secondary

Order	From	To
1	Attic_fSCP (Attic signal connector)	Left Control Panel (LCP) - Secondary

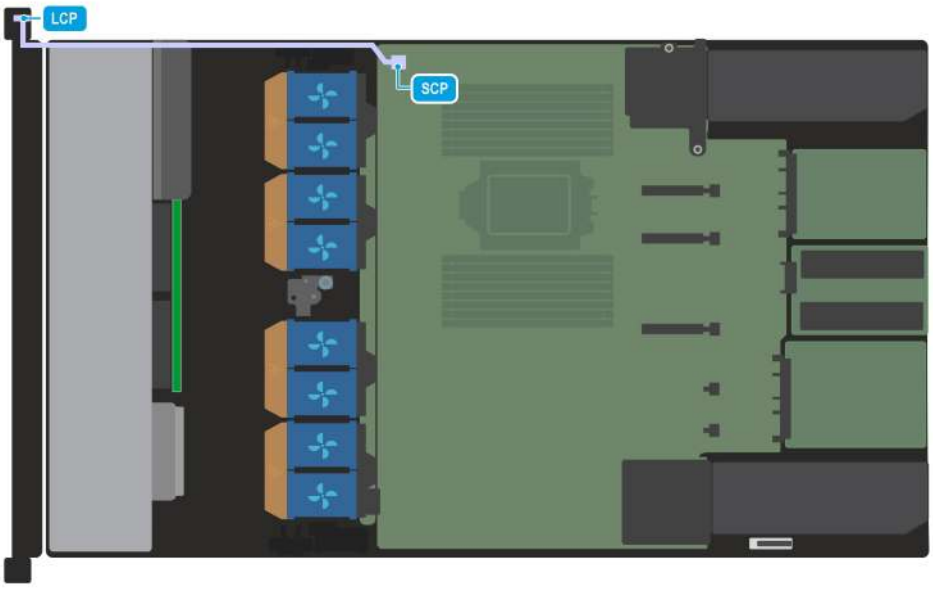

Figure 78. Left Control Panel (LCP) - Seconday (Quick Sync module

NOTE: Follow the sequential order as shown in the table to remove the cables, to install the cables follow the reverse sequential order.

Table 53. Left Control Panel (LCP) - Secondary (Quick Sync)

Order	From	To
1	SCP (HPM connector)	Left Control Panel (LCP) - Secondary

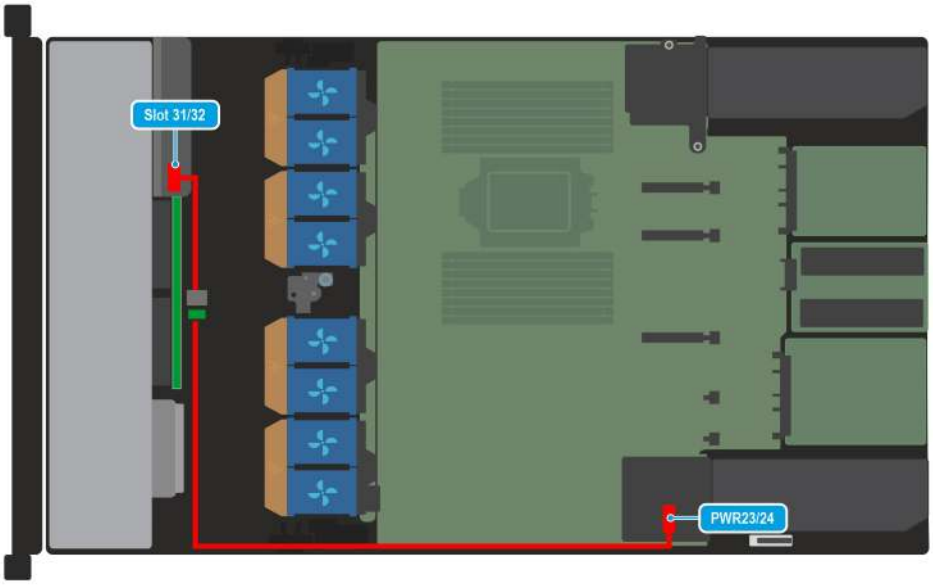

Figure 79. DPU - RF1c

NOTE: Follow the sequential order as shown in the table to remove the cables, to install the cables follow the reverse sequential order.

Table 54. DPU - RF1c

Order	From	To
1	HPM_PWR23_24 (HPM power connector)	Slot31/32 (Riser RF1c)

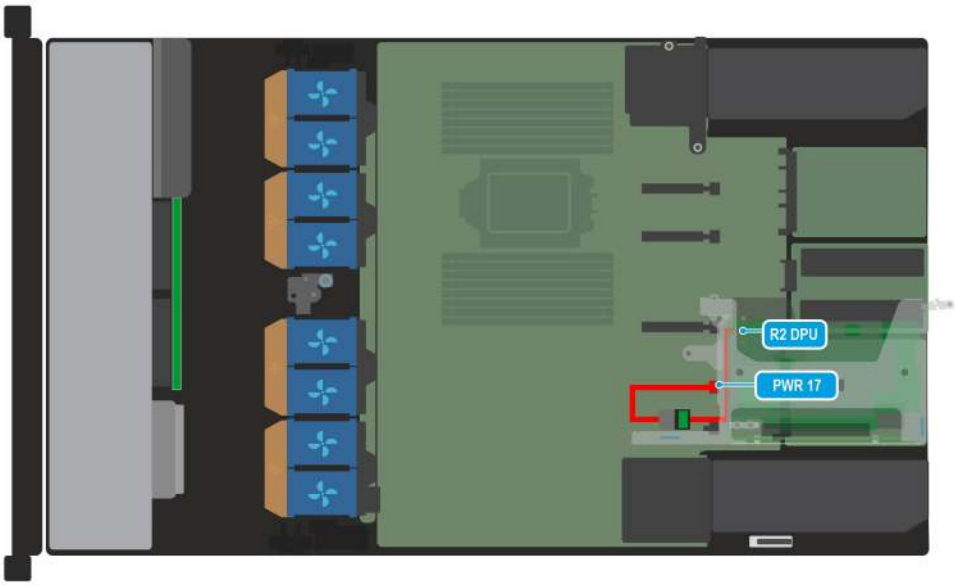

Figure 80. DPU - R2

NOTE: Follow the sequential order as shown in the table to remove the cables, to install the cables follow the reverse sequential order.

Table 55. DPU - R2

Order	From	To
1	HPM_PWR17/PWR18 (HPM power connector)	Slot2 (Riser R2q or R2t

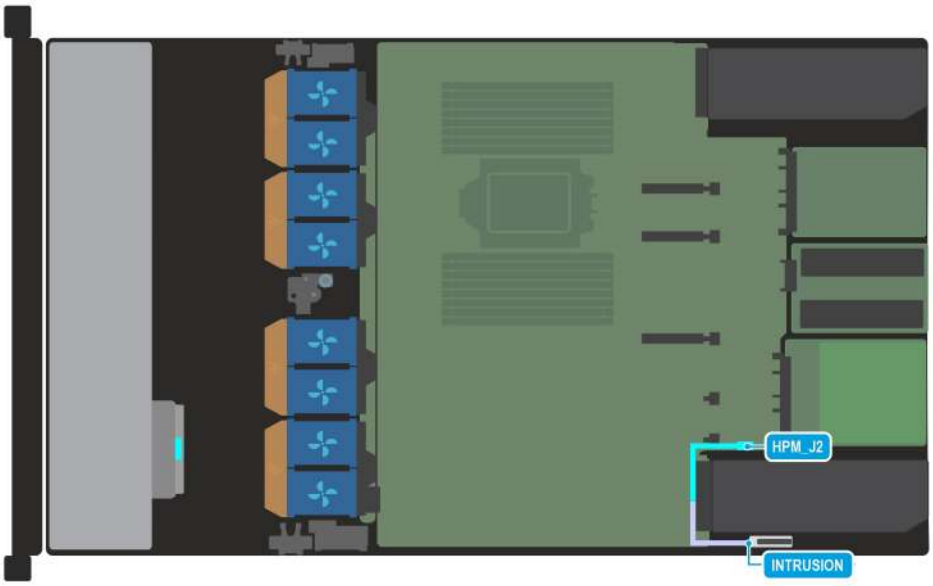

Figure 81. Intrusion Switch

Table 56. Intrusion Switch

Order	From	To
1	HPM_J2 (HPM signal connector)	Intrusion

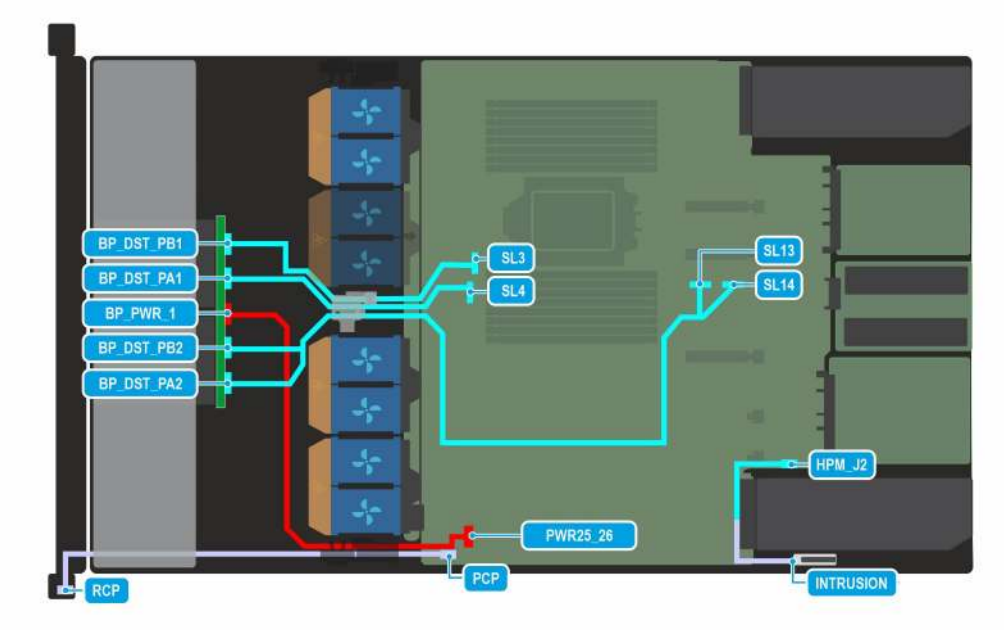

Figure 82. C01-01-RC0 : 8 x EDSFF E3.S (G5x4 NVMe Direct Connect)

NOTE: Follow the sequential order as shown in the table to remove the cables, to install the cables follow the reverse sequential order.

NOTE: The intrusion switch connects to the J2 connector through the additional dongle cable.

Table 57. C01-01-RC0 : 8 x EDSFF E3.S (G5x4 NVMe Direct Connect)

Order	From	To
1	HPM_PCP (signal connector on HPM)	Right Control Panel - Primary (RCP)
2	HPM_J2 (signal connector on HPM for intrusion switch)	Intrusion (Intrusion)
3	HPM_SL3_SL4 (signal connector on HPM)	BP_DST_PB1/BP_DST_PA1 (backplane signal connector)
4	HPM_SL13/SL14 (signal connector on HPM)	BP_DST_PB2/BP_DST_PA2 (backplane signal connector)
5	PWR25/PWR26 (power connector on HPM)	BP_PWR_1(backplane power connector)

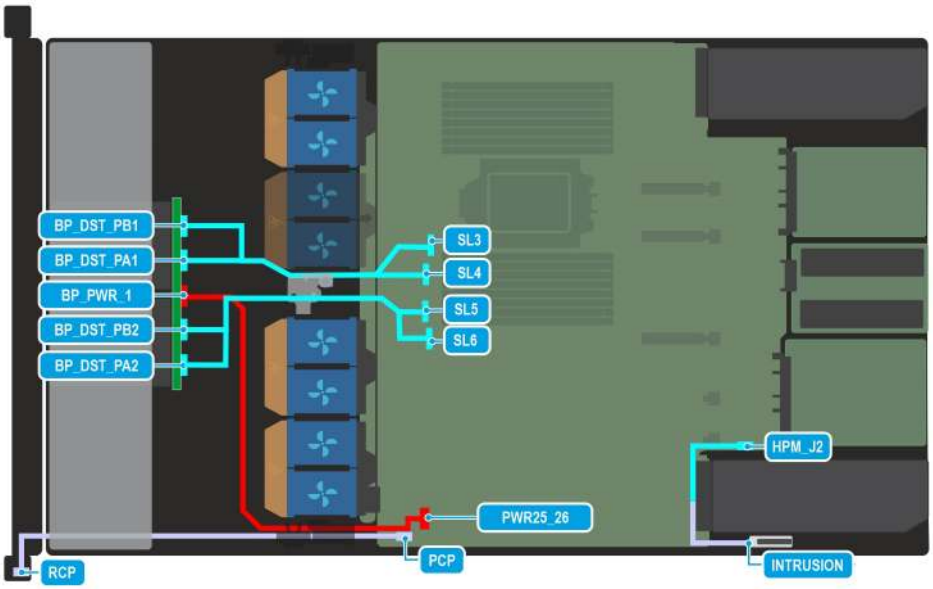

Figure 83. C01-02 : 8 x EDSFF E3.S (G5x4 NVMe Direct Connect)

NOTE: Follow the sequential order as shown in the table to remove the cables, to install the cables follow the reverse sequential order.

NOTE: The intrusion switch connects to the J2 connector through the additional dongle cable.

Table 58. C01-02 : 8 x EDSFF E3.S (G5x4 NVMe Direct Connect)

Order	From	To
1	HPM_PCP (signal connector on HPM)	Right Control Panel - Primary (RCP)
2	HPM_J2 (signal connector on HPM for intrusion switch)	Intrusion (Intrusion)
3	HPM_SL3_SL4 (signal connector on HPM)	BP_DST_PB1/BP_DST_PA1 (backplane signal connector)
4	HPM_SL5/SL6 (signal connector on HPM)	BP_DST_PB2/BP_DST_PA2 (backplane signal connector)
5	PWR25/PWR26 (power connector on HPM)	BP_PWR_1(backplane power connector)

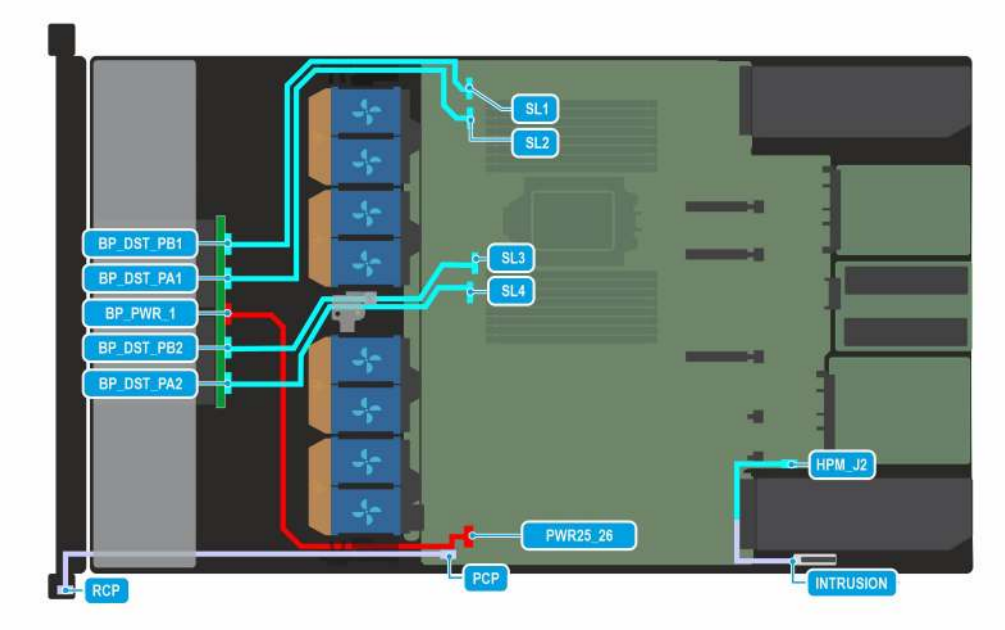

Figure 84. C01-03-RC3: 8 x EDSFF E3.S (G5x4 NVMe Direct Connect)

NOTE: Follow the sequential order as shown in the table to remove the cables, to install the cables follow the reverse sequential order.

NOTE: The intrusion switch connects to the J2 connector through the additional dongle cable.

Table 59. C01-03-RC3: 8 x EDSFF E3.S (G5x4 NVMe Direct Connect)

Order	From	To
1	HPM_PCP (signal connector on HPM)	Right Control Panel - Primary (RCP)
2	HPM_J2 (signal connector on HPM for intrusion switch)	Intrusion (Intrusion)
3	HPM_SL1_SL2 (signal connector on HPM)	BP_DST_PB1(backplane signal connector)
4	HPM_SL3_SL4 (signal connector on HPM)	BP_DST_PB2/BP_DST_PA2 (backplane signal connector)
5	PWR25/PWR26 (power connector on HPM)	BP_PWR_1(backplane power connector)

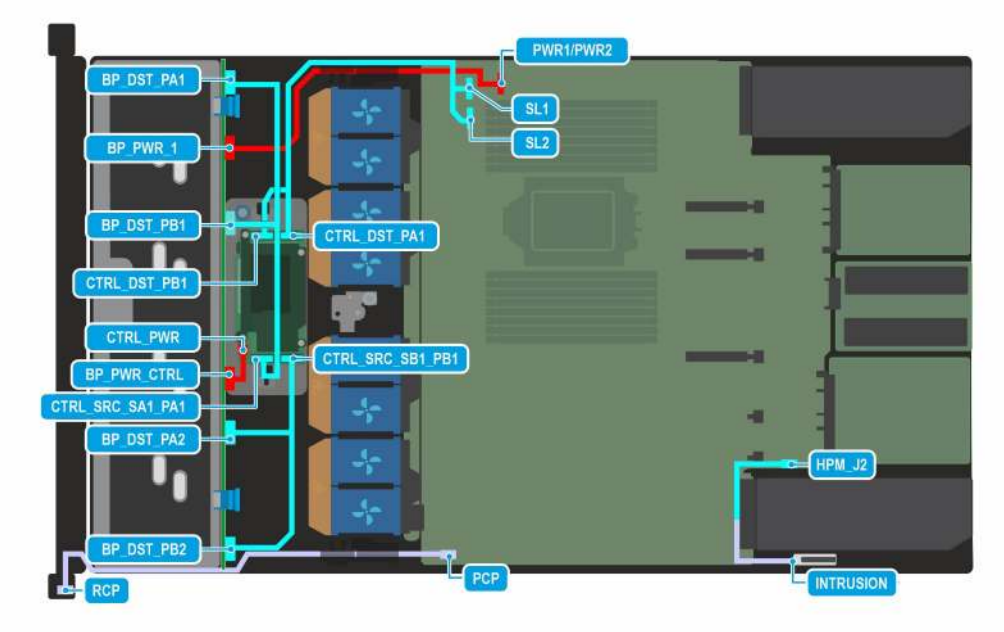

Figure 85. C02-02: 8 x 2.5-inch NVMe (RAID)

NOTE: Follow the sequential order as shown in the table to remove the cables, to install the cables follow the reverse sequential order.

NOTE: The intrusion switch connects to the J2 connector through the additional dongle cable.

Table 60. C02-02: 8 x 2.5-inch NVMe (RAID)

Order	From	To
1	HPM_PCP (signal connector on HPM)	Right Control Panel - Primary (RCP)
2	HPM_J2 (signal connector on HPM for intrusion switch)	Intrusion (Intrusion)
3	HPM_SL1_SL2 (signal connector on HPM)	CTRL_DST_PA1/CTRL_DST_PB1 (fPERC signal connector)
4	CTRL_PWR (fPERC power connector)	BP_PWR_CTRL(backplane power connector)
5	CTRL_SRC_SA1_PA1(signal connector on fPERC)	BP_DST_PA1/BP_DST_PB1(backplane signal connector)
6	CTRL_SRC_SB1_PB1(signal connector on fPERC)	BP_DST_PA2/BP_DST_PB2(backplane signal connector)
7	HPM_PWR1_2(HPM power connector)	BP_PWR_1(backplane power connector)

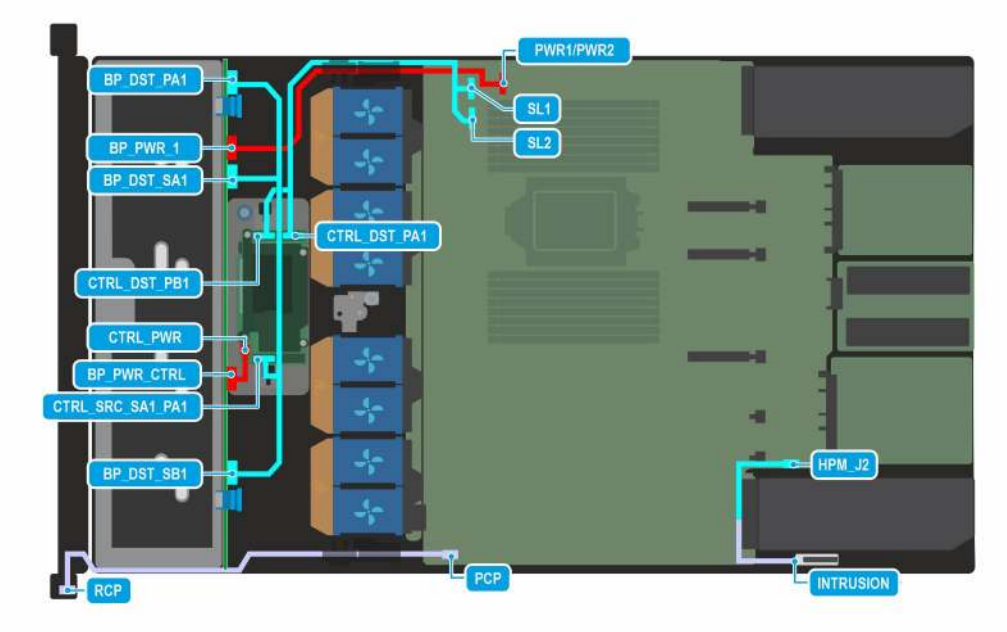

Figure 86. C02-05-: 8 x 2.5-inch SAS/SATA (RAID)

NOTE: Follow the sequential order as shown in the table to remove the cables, to install the cables follow the reverse sequential order.

NOTE: The intrusion switch connects to the J2 connector through the additional dongle cable.

Table 61. C02-05-: 8 x 2.5-inch SAS/SATA (RAID)

Order	From	To
1	HPM_PCP (signal connector on HPM)	Right Control Panel - Primary (RCP)
2	HPM_J2 (signal connector on HPM for intrusion switch)	Intrusion (Intrusion)
3	HPM_SL1_SL2 (signal connector on HPM)	CTRL_DST_PA1/CTRL_DST_PB1 (fPERC signal connector)
4	CTRL_PWR (fPERC power connector)	BP_PWR_CTRL(backplane power connector)
5	CTRL_SRC_SA1_PA1(signal connector on fPERC)	BP_DST_SA1/BP_DST_SB1(backplane signal connector)
6	HPM_PWR1_2(HPM power connector)	BP_PWR_1(backplane power connector)

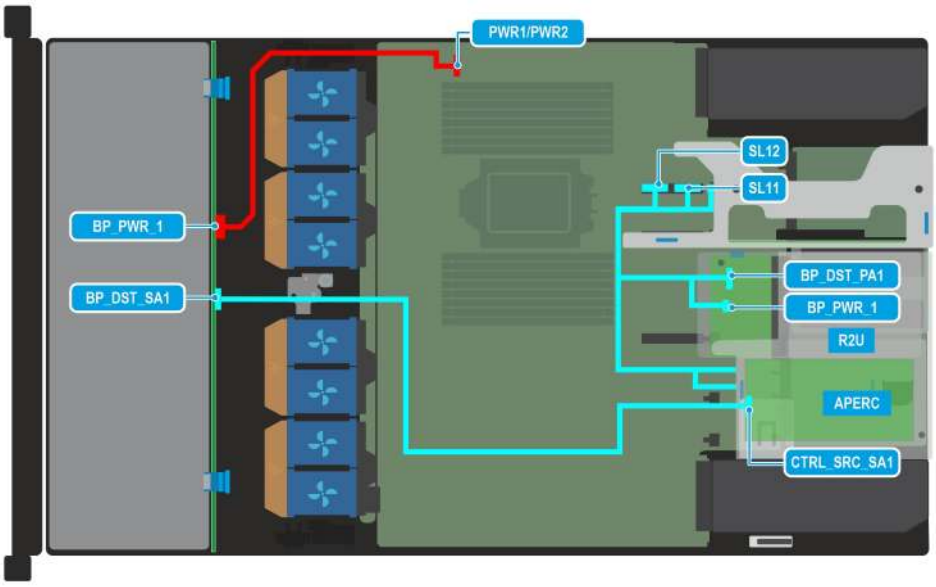

Figure 87. C03-01-: 4 x 5.5-inch SAS/SATA + Rear 2 x E3.S EDSFF

NOTE: Follow the sequential order as shown in the table to remove the cables, to install the cables follow the reverse sequential order.

Table 62. C03-01: 4 x 5.5-inch SAS/SATA + Rear 2 x E3.S EDSFF

Order	From	To
1	HPM_PWR1_2 (power connector on HPM)	BP_PWR_1 (backplane power connector)
2	CTRL_SRC_SA1 (signal connector on APERC)	BP_DST_SA1(backplane signal connector)
3	HPM_SL12_SL11 (signal connector on HPM)	BP_DST_PA1/BP_PWR_1 (backplane signal/ power connector) + R2u (rear riser)

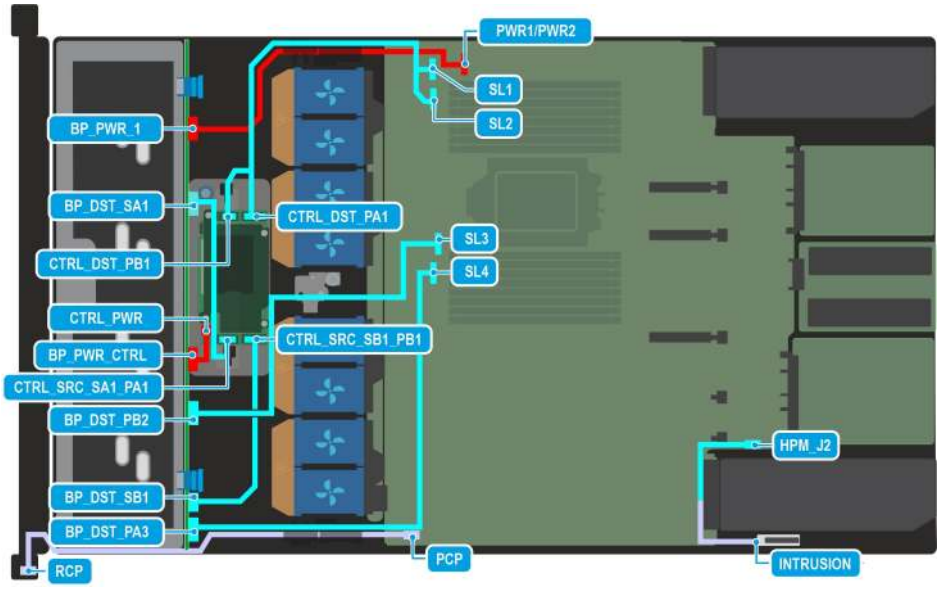

Figure 88. C04-01-: 10x2.5-inch (SAS4/SATA with 4 Universal slots)

NOTE: Follow the sequential order as shown in the table to remove the cables, to install the cables follow the reverse sequential order.

NOTE: The intrusion switch connects to the J2 connector through the additional dongle cable.

Table 63. C04-01-: 10x2.5-inch (SAS4/SATA with 4 Universal slots)

Order	From	To
1	HPM_PCP (signal connector on HPM)	Right Control Panel - Primary (RCP)
2	HPM_J2 (signal connector on HPM for intrusion switch)	Intrusion (Intrusion)
3	HPM_SL1_SL2 (signal connector on HPM)	CTRL_DST_PA1/CTRL_DST_PB1 (fPERC signal connector)
4	CTRL_SRC_SA1_PA1(signal connector on fPERC)	BP_DST_SA1(backplane signal connector)
5	CTRL_PWR (fPERC power connector)	BP_PWR_CTRL(backplane power connector)
6	HPM_SL3 (signal connector on HPM)	BP_DST_PB2 (backplane signal connector)
7	CTRL_SRC_SB1_PB1(signal connector on fPERC)	BP_DST_SB1(backplane signal connector)
8	HPM_SL4 (signal connector on HPM)	BP_DST_PA3 (backplane signal connector)
9	HPM_J2 (signal connector on HPM for intrusion switch)	Intrusion (Dongle)
10	HPM_PWR1_2(HPM power connector)	BP_PWR_1(backplane power connector)

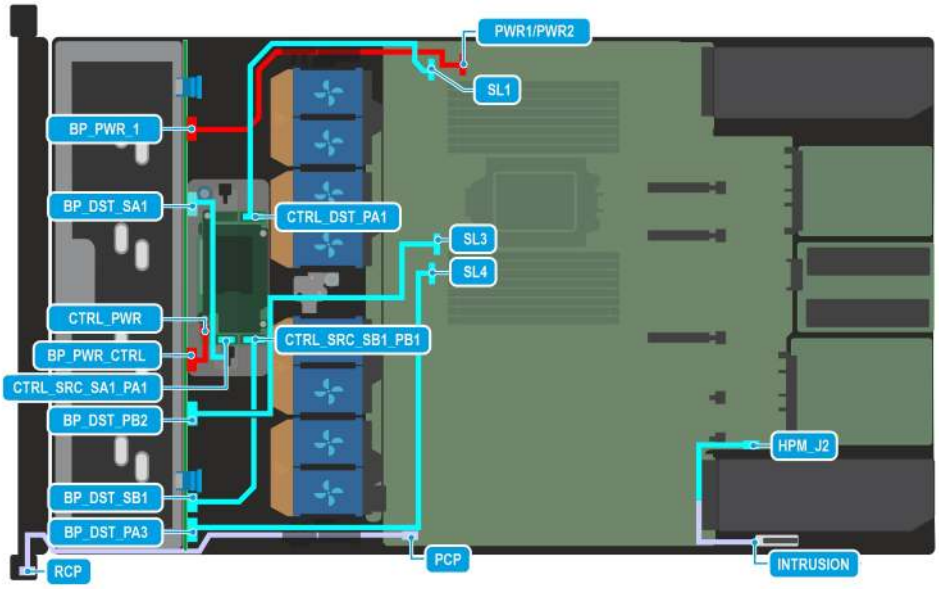

Figure 89. C04-02-: 10x2.5-inch (SAS4/SATA with 4 Universal slots)

NOTE: Follow the sequential order as shown in the table to remove the cables, to install the cables follow the reverse sequential order.

NOTE: The intrusion switch connects to the J2 connector through the additional dongle cable.

Table 64. C04-02-: 10x2.5-inch (SAS4/SATA with 4 Universal slots)

Order	From	To
1	HPM_PCP (signal connector on HPM)	Right Control Panel - Primary (RCP)
2	HPM_J2 (signal connector on HPM for intrusion switch)	Intrusion (Intrusion)

Table 64. C04-02-: 10x2.5-inch (SAS4/SATA with 4 Universal slots) (continued)

Order	From	To
3	HPM_SL1 (signal connector on HPM)	CTRL_DST_PA1 (fPERC signal connector)
4	CTRL_SRC_SA1_PA1(signal connector on fPERC)	BP_DST_SA1(backplane signal connector)
5	CTRL_PWR (fPERC power connector)	BP_PWR_CTRL(backplane power connector)
6	HPM_SL3 (signal connector on HPM)	BP_DST_PB2 (backplane signal connector)
7	CTRL_SRC_SB1_PB1(signal connector on fPERC)	BP_DST_SB1(backplane signal connector)
8	HPM_SL4 (signal connector on HPM)	BP_DST_PA3 (backplane signal connector)
9	HPM_J2 (signal connector on HPM for intrusion switch)	Intrusion (Dongle)
10	HPM_PWR1_2(HPM power connector)	BP_PWR_1(backplane power connector)

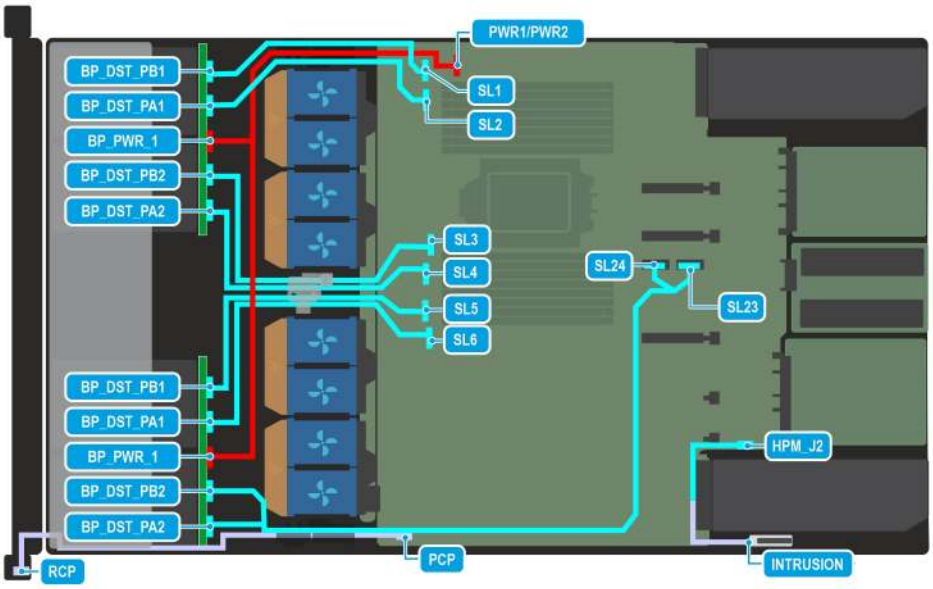

Figure 90. C05-01-: 16 x E3.S EDSFF NVMe

NOTE: Follow the sequential order as shown in the table to remove the cables, to install the cables follow the reverse sequential order.

NOTE: The intrusion switch connects to the J2 connector through the additional dongle cable.

Table 65. C05-01-: 16 x E3.S EDSFF NVMe

Order	From	To
1	HPM_PCP (signal connector on HPM)	Right Control Panel - Primary (RCP)
2	HPM_J2 (signal connector on HPM for intrusion switch)	Intrusion (Intrusion)
3	HPM_SL1/SL2 (signal connector on HPM)	BP_DST_PB1/BP_DST_PA1 (backplane signal connector)
4	HPM_SL3/SL4 (signal connector on HPM)	BP_DST_PB2/BP_DST_PA2 (backplane signal connector)
5	HPM_SL5/SL6 (signal connector on HPM)	BP_DST_PB1/BP_DST_PA1 (backplane signal connector)

Table 65. C05-01-: 16 x E3.S EDSFF NVMe (continued)

Order	From	To
6	HPM_SL23/SL24 (signal connector on HPM)	BP_DST_PB2/BP_DST_PA2 (backplane signal connector)
7	HPM_PWR1_2(HPM power connector)	BP_PWR_1(backplane power connector)

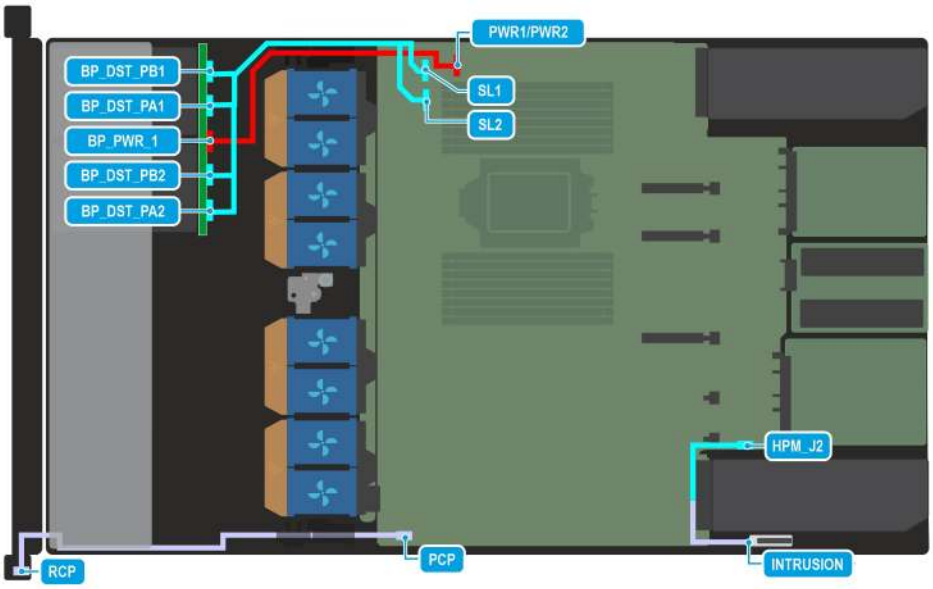

Figure 91. C06-01-: 8 x E3.S EDSFF NVMe - Hot Aisle

NOTE: Follow the sequential order as shown in the table to remove the cables, to install the cables follow the reverse sequential order.

NOTE: The intrusion switch connects to the J2 connector through the additional dongle cable.

Table 66. C06-01-: 8 x E3.S EDSFF NVMe - Hot Aisle

Order	From	To
1	HPM_PCP (signal connector on HPM)	Right Control Panel - Primary (RCP)
2	HPM_J2 (signal connector on HPM for intrusion switch)	Intrusion (Intrusion)
3	HPM_SL1/SL2 (signal connector on HPM)	BP_DST_PB1/BP_DST_PA1/BP_DST_PB2/ BP_DST_PA2 (backplane signal connector)
4	HPM_PWR1_2(HPM power connector)	BP_PWR_1(backplane power connector)

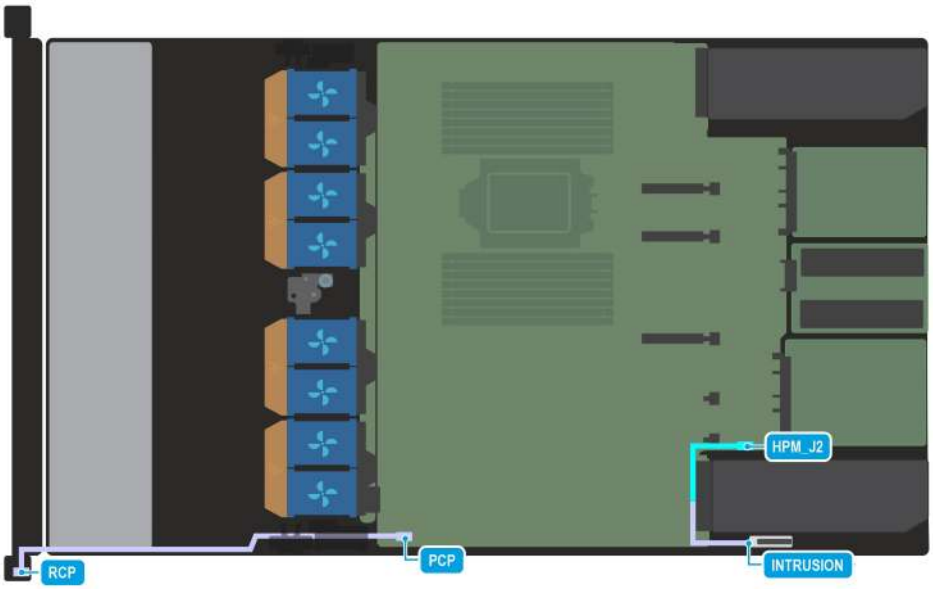

Figure 92. C00-01-: No BP Config

NOTE: Follow the sequential order as shown in the table to remove the cables, to install the cables follow the reverse sequential order.

NOTE: The intrusion switch connects to the J2 connector through the additional dongle cable.

Table 67. C00-01-: No BP Config

Order	From	To
1	HPM_PCP (signal connector on HPM)	Right Control Panel - Primary (RCP)
2	HPM_J2 (signal connector on HPM for intrusion switch)	Intrusion (Intrusion)

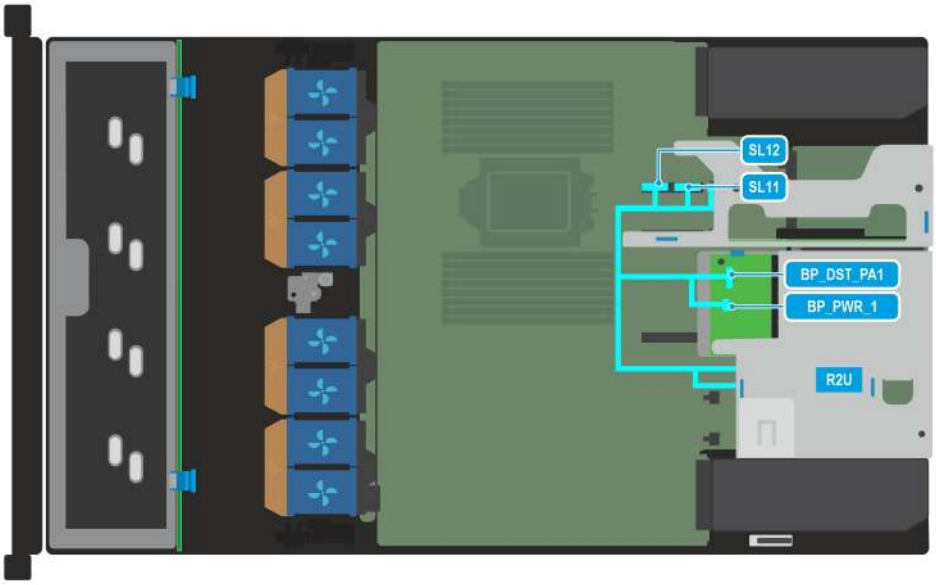

Figure 93. RC1

NOTE: Follow the sequential order as shown in the table to remove the cables, to install the cables follow the reverse sequential order.

Table 68. RC1

Order	From	To
1	HPM_SL12/SL11 (HPM signal connector)	BP_DST_PA1/BP_PWR_1)/R2u (backplane signal and power connector on rear riser)

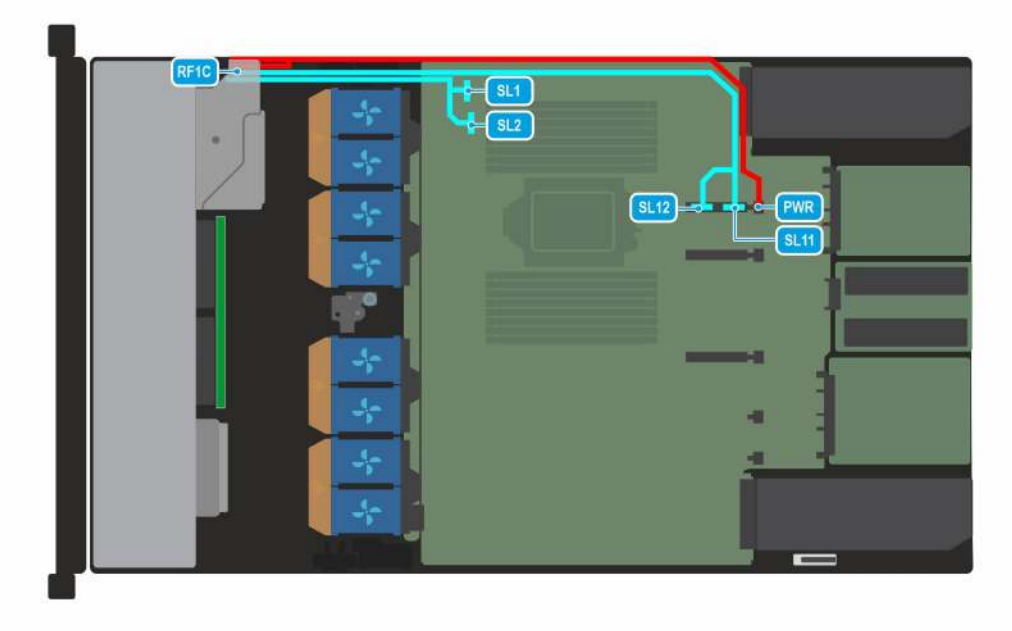

Figure 94. RC2

NOTE: Follow the sequential order as shown in the table to remove the cables, to install the cables follow the reverse sequential order.

Table 69. RC2

Order	From	To
1	HPM_SL12/SL11 (HPM signal connector)	Rf1a (front riser)
2	HPM_SL12/SL11 (HPM signal connector)	Rf1c (front riser)

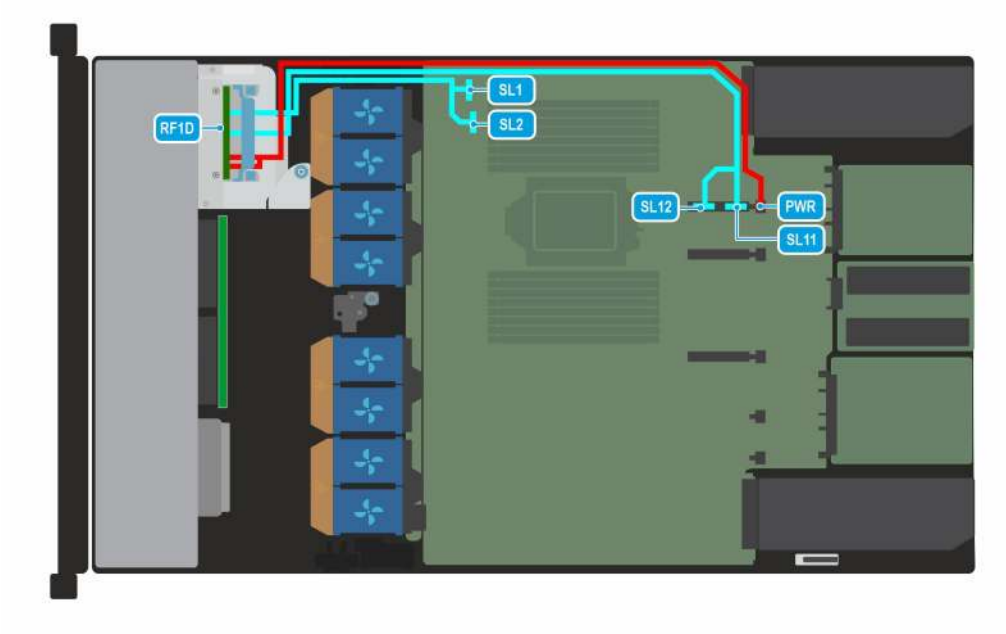

Figure 95. RC 3

NOTE: Follow the sequential order as shown in the table to remove the cables, to install the cables follow the reverse sequential order.

Table 70. RC3

Order	From	To
1	HPM_SL1/SL2 (HPM signal connector)	OCP Slot 31(Riser RF1b)
2	HPM_SL11/SL12 (HPM signal connector)	OCP Slot 32/OCP PWR Sot 31/OCP PWR Slot 32

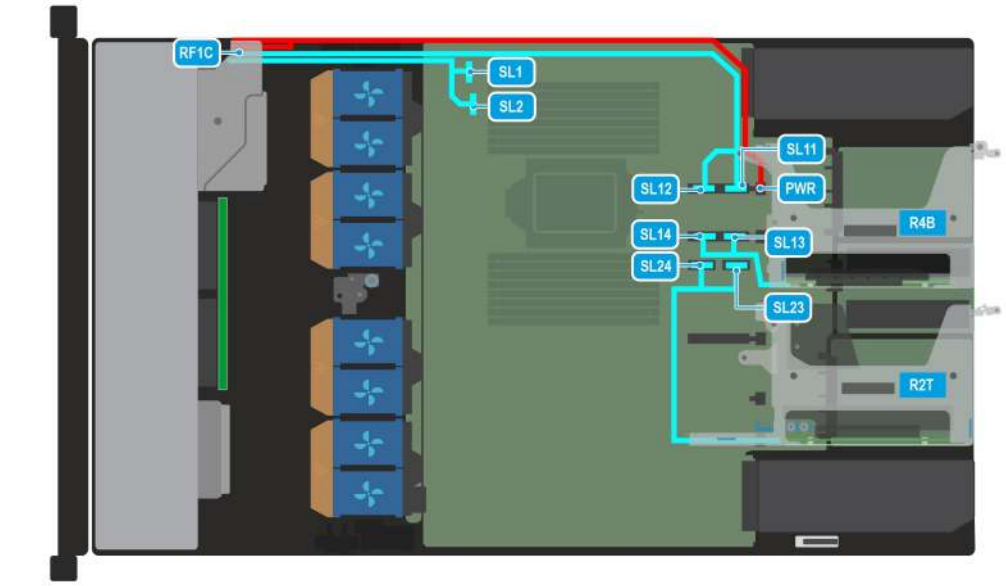

Figure 96. RC 4

NOTE: Follow the sequential order as shown in the table to remove the cables, to install the cables follow the reverse sequential order.

Table 71. RC4

Order	From	To
1	HPM_SL1/SL2 (HPM signal connector)	RF1a (front riser)
2	HPM_SL11/SL12 (HPM signal connector)	RF1c (front riser)
3	HPM_SL13/SL14 (HPM signal connector)	R4b (rear riser)
4	HPM_SL23/SL24 (HPM signal connector)	R2t (rear riser)

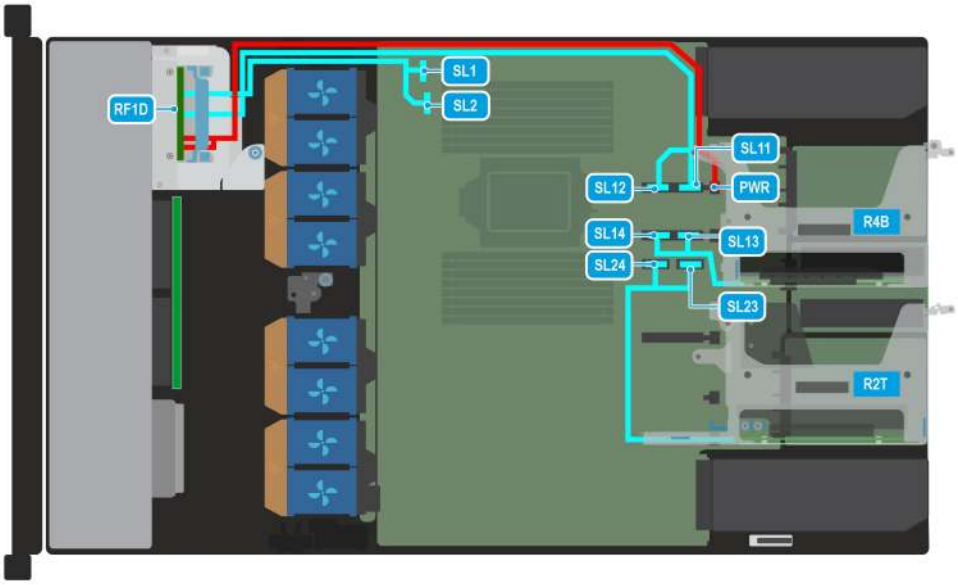

Figure 97. RC 5

NOTE: Follow the sequential order as shown in the table to remove the cables, to install the cables follow the reverse sequential order.

Table 72. RC5

Order	From	To
1	HPM_SL13/SL14 (HPM signal connector)	R4b (rear riser)
2	HPM_SL11/SL12 (HPM signal connector)	R2q (rear riser)

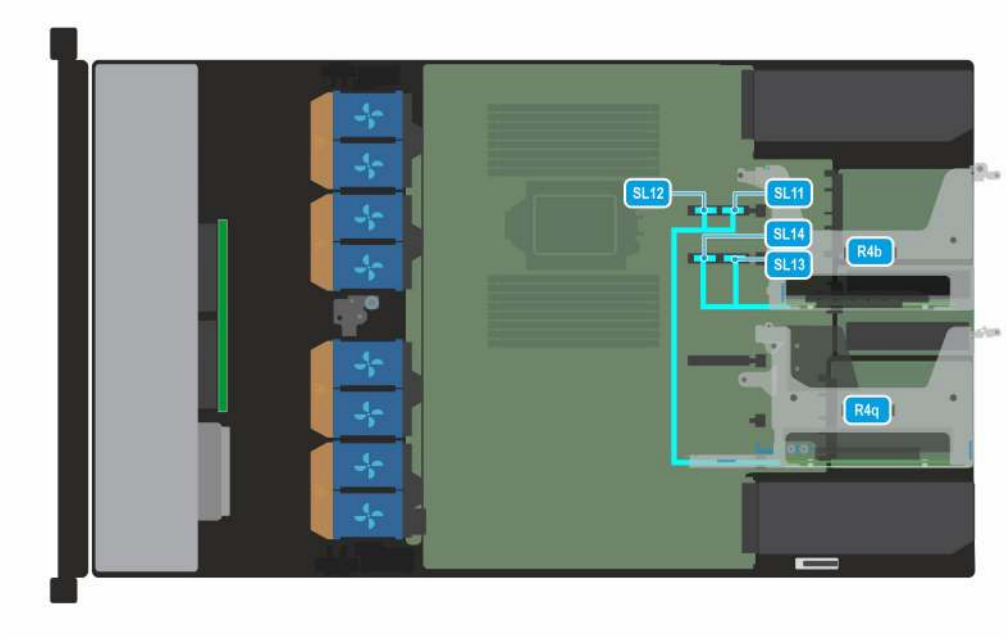

Figure 98. RC6

Table 73. RC6

Order	From	To
1	HPM_SL13/SL14 (HPM signal connector)	Riser (R4b)
2	HPM_SL11/SL12 (HPM signal connector)	Riser (R2q)

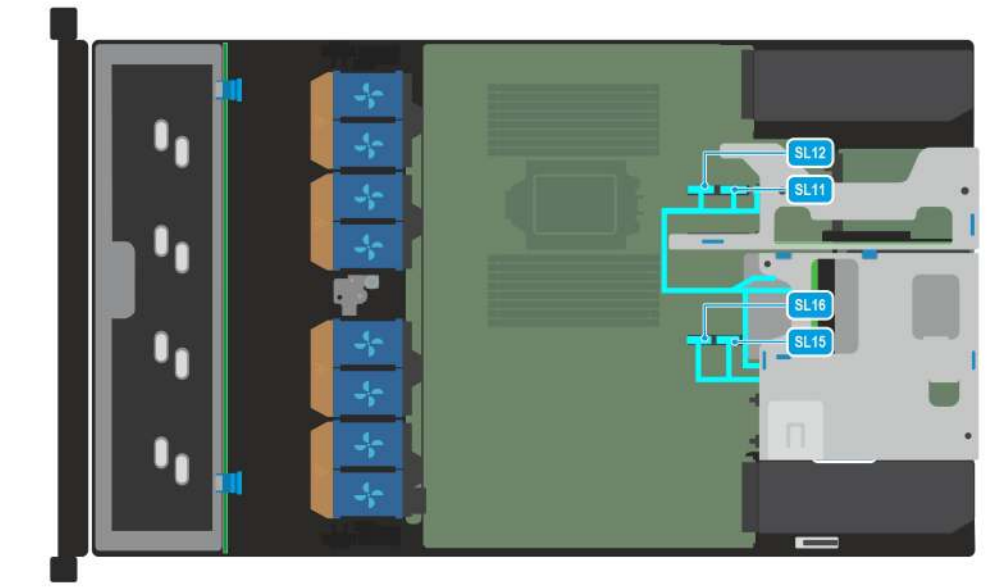

Figure 99. RC 7

NOTE: Follow the sequential order as shown in the table to remove the cables, to install the cables follow the reverse sequential order.

Table 74. RC7

Order	From	To
1	HPM_SL11/SL12 (HPM signal connector)	Riser (R2k-OCP/R2k-PWR)
2	HPM_SL15/SL16 (HPM signal connector)	Riser (R2k)

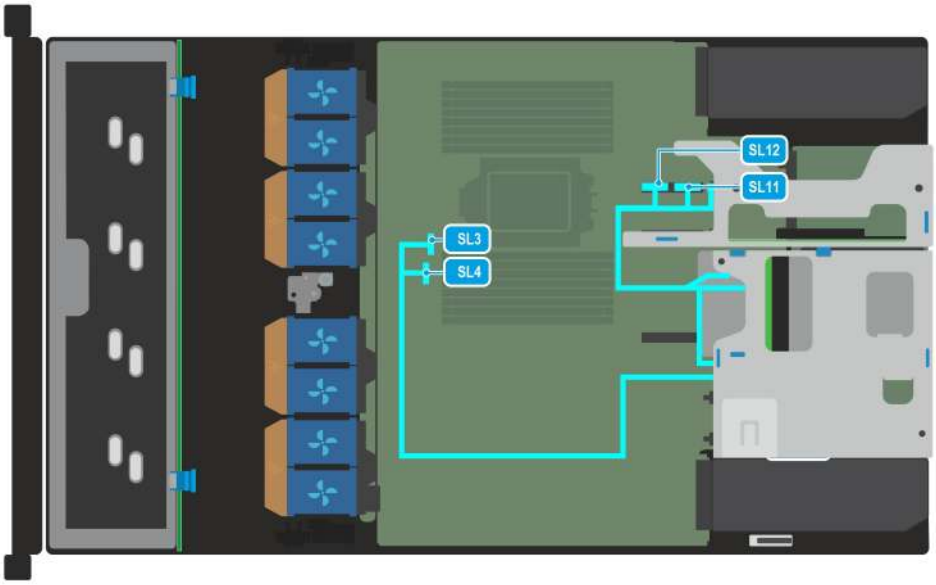

Figure 100. RC 8

NOTE: Follow the sequential order as shown in the table to remove the cables, to install the cables follow the reverse sequential order.

Table 75. RC8

Order	From	To
1	HPM_SL11/SL12 (HPM signal connector)	Riser (R2v-OCP)
2	HPM_SL3/SL4 (HPM signal connector)	Riser (R2v)

System memory

System memory guidelines

The PowerEdge R470 system supports DDR5 registered DIMMs (RDIMMs). System memory holds the instructions that are started by the processor.

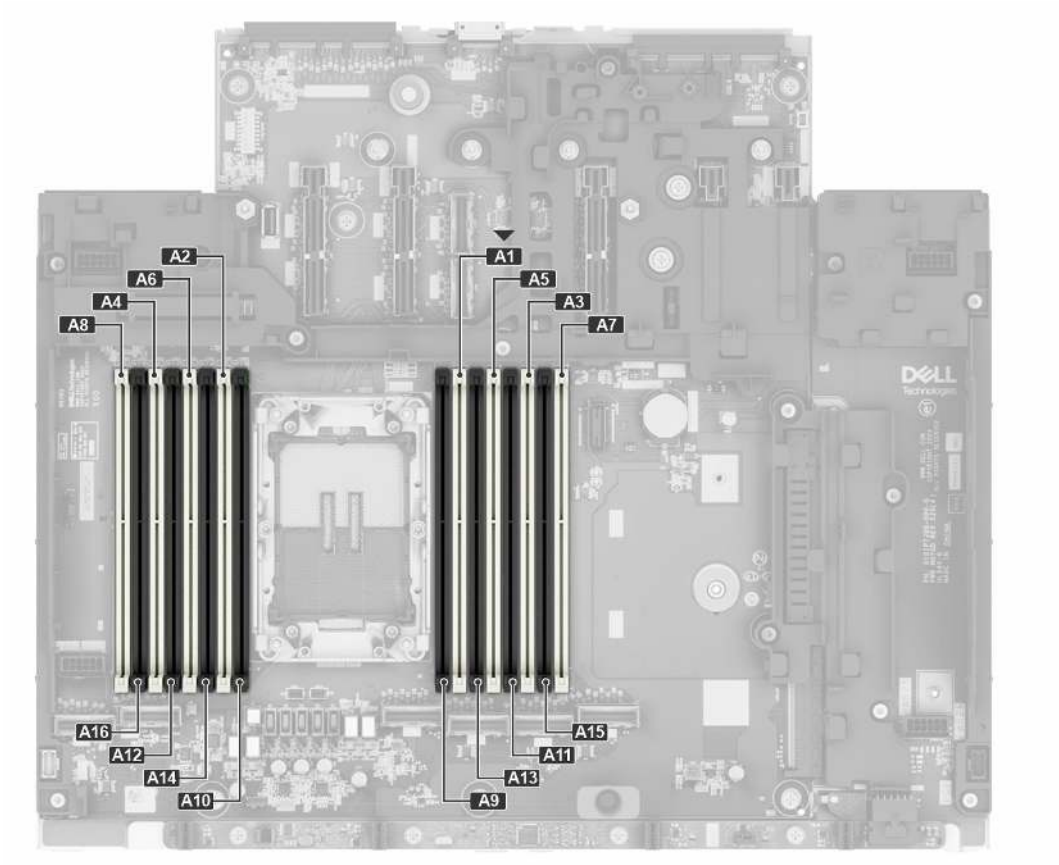

Figure 101. Memory channels

Memory channels are organized as follows:

Table 76. Memory channels

Processor	Channel A	Channel B	Channel C	Channel D	Channel E	Channel F	Channel G	Channel H
Processor 1	Slots A1 and A9	Slots A5 and A13	Slots A3 and A11	Slots A7 and A15	Slots A2 and A10	Slots A6 and A14	Slots A4 and A12	Slots A8 and A16

Table 77. Supported memory matrix

DIMM type	Rank	Capacity	DIMM rated voltage and speed	Operating Speed			
				Intel® Xeon 6 E- core processor		Intel® Xeon 6 P- core processor	
				1 DIMM per channel (DPC)	2 DIMM per channel (DPC)	1 DIMM per channel (DPC)	2 DIMM per channel (DPC)
RDIMM	1R	16 GB	DDR5 (1.1 V), 6400 MT/s	N/A	N/A	Up to 6400 MT/s	N/A
	2 R	32 GB	DDR5 (1.1 V), 6400 MT/s	Up to 6400 MT/s	N/A	Up to 6400 MT/s	Up to 5200 MT/s
		64 GB	DDR5 (1.1 V), 6400 MT/s	Up to 6400 MT/s	Up to 5200 MT/s	Up to 6400 MT/s	Up to 5200 MT/s

Table 77. Supported memory matrix (continued)

DIMM type	Rank	Capacity	DIMM rated voltage and speed	Operating Speed			
				Intel® Xeon 6 E- core processor		Intel® Xeon 6 P- core processor	
				1 DIMM per channel (DPC)	2 DIMM per channel (DPC)	1 DIMM per channel (DPC)	2 DIMM per channel (DPC)
		96 GB	DDR5 (1.1 V), 6400 MT/s	N/A	N/A	Up to 6400 MT/s	Up to 5200 MT/s
		128 GB	DDR5 (1.1 V), 6400 MT/s	N/A	N/A	Up to 6400 MT/s	Up to 5200 MT/s
	8 R	256 GB	DDR5 (1.1 V), 6400 MT/s	N/A	N/A	N/A	Up to 5200 MT/s

Table 78. Memory Capacity Requirement For Supported GPU Cards

Recommended System Memory Range (1.5x - 2x GPU Memory)					
GPU Name	GPU Memory	x1 GPU	x2 GPUs	x3 GPUs	x4 GPUs
L4	24 GB	36 - 48 GB	72 - 96 GB	N/A	N/A

NOTE: The processor may reduce the performance of the rated DIMM speed.

NOTE: Maximum DIMM transfer speed support dependent on CPU SKU and DIMM population.

NOTE: On Intel® Xeon 6 E- core processor the following are supported:

- 1, 8 or 16 DIMMs
- 32 GB DIMMs are supported only in 1 DPC configuration or 1 DIMM per CPU configuration
- 64 GB DIMMs are supported in 1 DPC or 2 DPC
- Maximum of 16 DIMMs are supported only with 64 GB memory module

NOTE: On Intel® Xeon 6 P- core processor the following are supported:

- 1, 4, 8, 12 or 16 DIMMs
- 256 GB DIMMs are not supported in 8 DIMM configuration
- 16 GB and 32 GB DIMMs are supported in 1 DIMM per CPU configuration
- 32 GB and 64 GB DIMMs are supported in 4 DIMMs per CPU configuration
- Only 32 GB memory is supported in 12 DIMMs per CPU configuration
- 16 GB memory is not supported in 16 DIMMs per CPU configuration
- Memory mirroring and Fault Resilient Mode(FRM) is supported in 8 or 16 DIMMs per CPU configuration

NOTE: One DIMM per CPU configuration has limited features.

General memory module installation guidelines

To ensure optimal performance of your system, observe the following general guidelines when configuring your system memory. If your system's memory configuration fails to observe these guidelines, your system might not boot, stop responding during memory configuration, or operate with reduced memory.

The memory bus may operate at speeds of 6400 MT/s or lower, speed depending on the following factors:

- System profile selected (for example, Performance, Performance Per Watt Optimized (OS), or Custom [can be run at high speed or lower])
- Maximum supported DIMM speed of the processors

- Only DDR5- 6400 MT/s RDIMMs supported

NOTE: MT/s indicates DIMM speed in MegaTransfers per second.

The following are the recommended guidelines for installing memory modules:

- All DIMMs must be DDR5.
- DIMM mixing configurations is not supported. All DIMM slots must be populated with the exact same DIMMs.
- Populate memory module sockets only if a processor is installed.
- For single-processor systems, sockets A1 to A16 are available.

In **Optimizer Mode**, the DRAM controllers operate independently in the 64-bit mode and provide optimized memory performance.

Table 79. Memory population rules

Processor	Memory population	Memory population information
Single processor	A{1}, A{2}, A{3}, A{4}, A{5}, A{6}, A{7}, A{8}, A{9}, A{10}, A{11}, A{12}, A{13}, A{14}, A{15}, A{16}	1, 4, 8, 12 or 16 DIMMs are allowed.

- Populate all the sockets with white release tabs first, followed by the sockets with black release tabs.
- Unbalanced or odd memory configurations result in a performance loss, and the system may not identify the memory modules being installed. Always populate memory channels identically with equal DIMMs for the best performance.
- Supported RDIMM configurations are 1, 4, 8, 12 or 16 DIMMs per processor.

Removing a memory module

Prerequisites

1. Follow the safety guidelines listed in the Safety instructions.
2. Follow the procedure listed in Before working inside your system.
3. Remove the system cover.
4. Remove the air shroud.

WARNING: The memory modules are hot to touch for some time after the system has been powered off. Allow the memory modules to cool before handling them.

NOTE: For proper system cooling, memory module blanks must be installed in any memory socket that is not populated. Remove the memory module blanks only if you intend to install the memory module in these sockets. DIMM blanks are only required when the CPU TDP is greater than 250 W. CPU with TDP less that 250 W do not require DIMM blanks.

Steps

1. Locate the appropriate memory module socket.
2. To release the memory module from the socket, simultaneously press the ejectors on both ends of the memory module socket to fully open.

   CAUTION: Handle each memory module only by the card edges, ensuring not to touch the middle of the memory module or metallic contacts.

3. Lift the memory module away from the system.

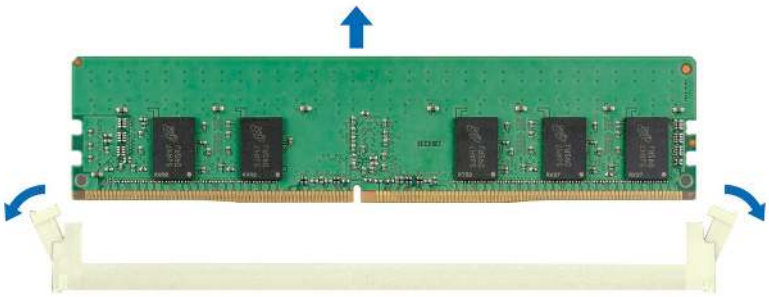

Figure 102. Removing a memory module

Next steps

Replace the memory module.

Installing a memory module

Prerequisites

1. Follow the safety guidelines listed in the Safety instructions.
2. Follow the procedure listed in Before working inside your system.
3. Remove the system cover.
4. Remove the air shroud.

Steps

1. Locate the appropriate memory module socket.

   CAUTION: Handle each memory module only by the card edges, ensuring not to touch the middle of the memory module or metallic contacts.

   NOTE: Ensure that the socket ejector latches are fully open before installing the memory module.

2. Align the edge connector of the memory module with the alignment key of the memory module socket, and insert the memory module in the socket.

   CAUTION: To prevent damage to the memory module or the memory module socket during installation, do not bend or flex the memory module. Insert both ends of the memory module simultaneously.

   NOTE: The memory module socket has an alignment key that enables you to install the memory module in the socket in only one orientation.

   CAUTION: Do not apply pressure at the center of the memory module; apply pressure at both ends of the memory module evenly.

3. Press the memory module with your thumbs until the ejectors firmly click into place. When the memory module is properly seated in the socket, the memory module socket levers align with the levers on the other sockets that have memory modules that are installed.

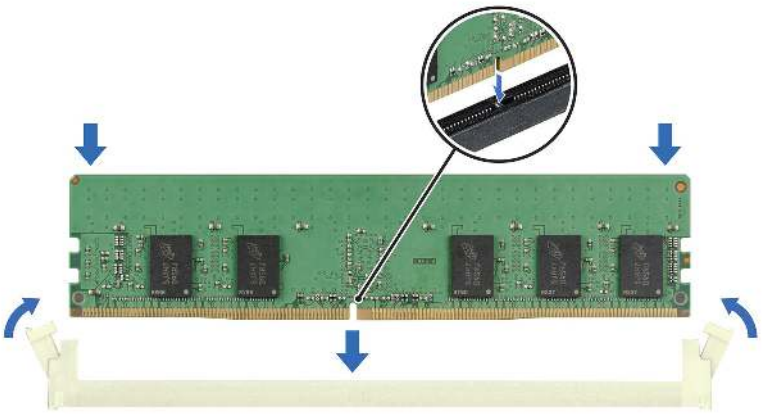

Figure 103. Installing a memory module

Next steps

1. Follow the procedure listed in After working inside your system.
2. To verify that the memory module has been installed properly, press **F2** during reboot and click **System Setup Main Menu > System BIOS > Memory Settings**. In the **Memory Settings** screen, the **System Memory Size** must reflect the updated capacity of the installed memory.
3. If the **System Memory Size** is incorrect, one or more of the memory modules may not be installed properly. Shut down the system and ensure that the memory modules are firmly seated in the correct sockets.
4. Run the system memory test in system diagnostics.

Processor and heat sink

This is a service technician replaceable part only.

Removing the processor and heat sink module

Prerequisites

1. Follow the safety guidelines listed in the Safety instructions.
2. Follow the procedure listed in the Before working inside your system.

   NOTE: The heat sink and processor are hot to touch for some time after the system has been powered off. Allow the heat sink and processor to cool down before handling them.

3. Remove the system cover.
4. Remove the air shroud.
5. The system supports different to types of heatsinks and the procedure to remove them are similar.

   NOTE: The heat sink and processor are hot to touch for some time after the system has been powered off. Allow the heat sink and processor to cool down before handling them.

Steps

1. Ensure all four anti-tilt wires are in the locked position (outward position), and then using a Torx T30 screwdriver, loosen the captive nuts on the processor heat sink module (PHM) in the order that is mentioned below:
   a. Loosen the first nut three turns.

b. Loosen the nut diagonally opposite to the nut you loosened first.
c. Repeat the procedure for the remaining two nuts.
d. Return to the first nut and loosen it completely.
e. For the remote heatsink we need to loosen the fifth nut before lifting the module from the system.

NOTE: Ensure that the anti-tilt wires on the PHM are in locked position when loosening the captive nuts.

2. Set all the anti-tilt wires to unlocked position (inward position).

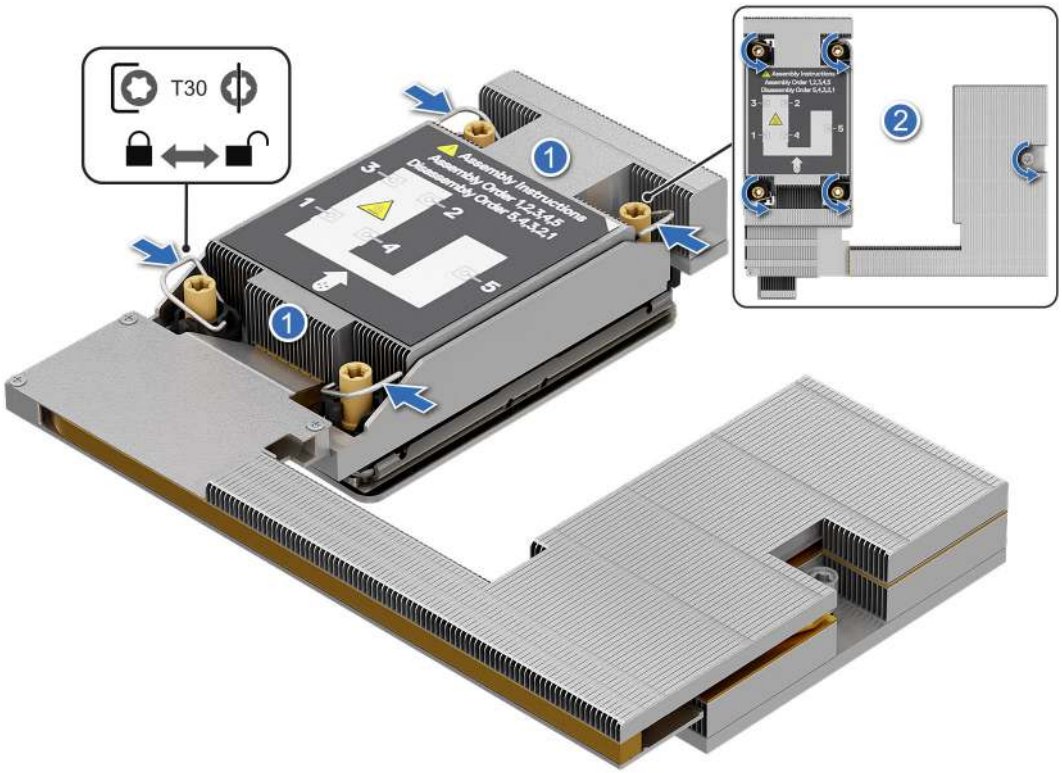

Figure 104. Removing the processor heat sink module

3. Lift the PHM from the system and set the PHM aside with the processor side facing up.

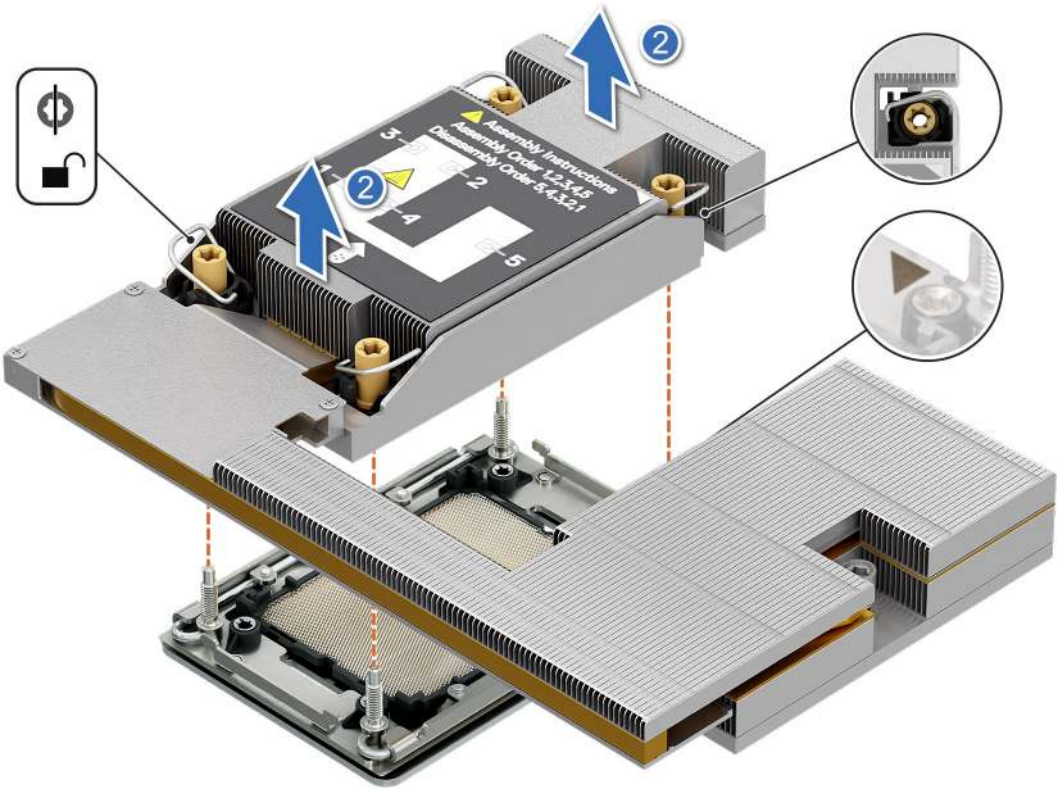

Figure 105. Removing a heat sink

Next steps

If you are removing a faulty heat sink, replace the heat sink, if not, remove the processor.

Removing the processor

Prerequisites

WARNING: Remove the processor from processor and heat sink module (PHM) only if you are replacing the processor or heat sink.

1. Follow the safety guidelines listed in the Safety instructions.
2. Follow the procedure listed in the Before working inside your system.
3. Remove the processor heat sink module.

CAUTION: You may find the CMOS battery loss or CMOS checksum error that is displayed during the first instance of powering on the system after the processor or system board replacement which is expected. To fix this, go to setup option to configure the system settings.

Steps

1. Place the heat sink with the processor side facing up.
2. Using your thumb, lift the thermal interface material (TIM) break lever to release the processor from the TIM and retaining clip.
3. Holding the processor by the edge, lift the processor away from the retaining clip.

   NOTE: Ensure to hold the retaining clip to the heat sink as you lift the TIM break lever.

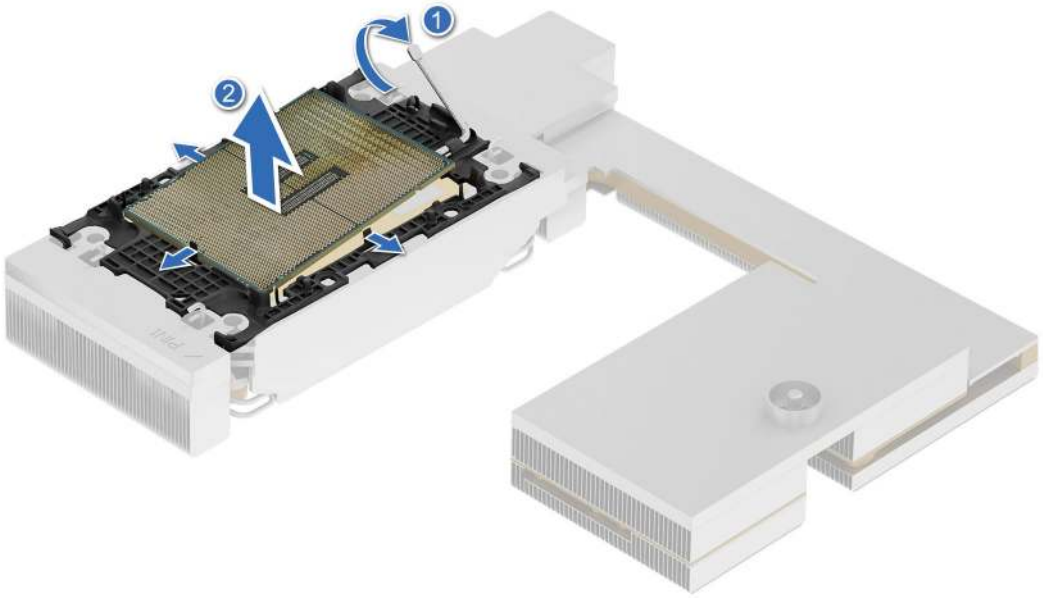

Figure 106. Removing the processor

NOTE: Ensure to return the TIM break lever on the retaining clip back to its original position.

4. Using your thumb and index finger, first hold the retaining clip release tab at the pin 1 connector, pull out the tip of the retaining clip release tab, and then lift the retaining clip partially from the heat sink.
5. Repeat the procedure at the remaining three corners of the retaining clip.
6. After all the corners are released from the heat sink, lift the retaining clip from the pin 1 corner of the heat sink.

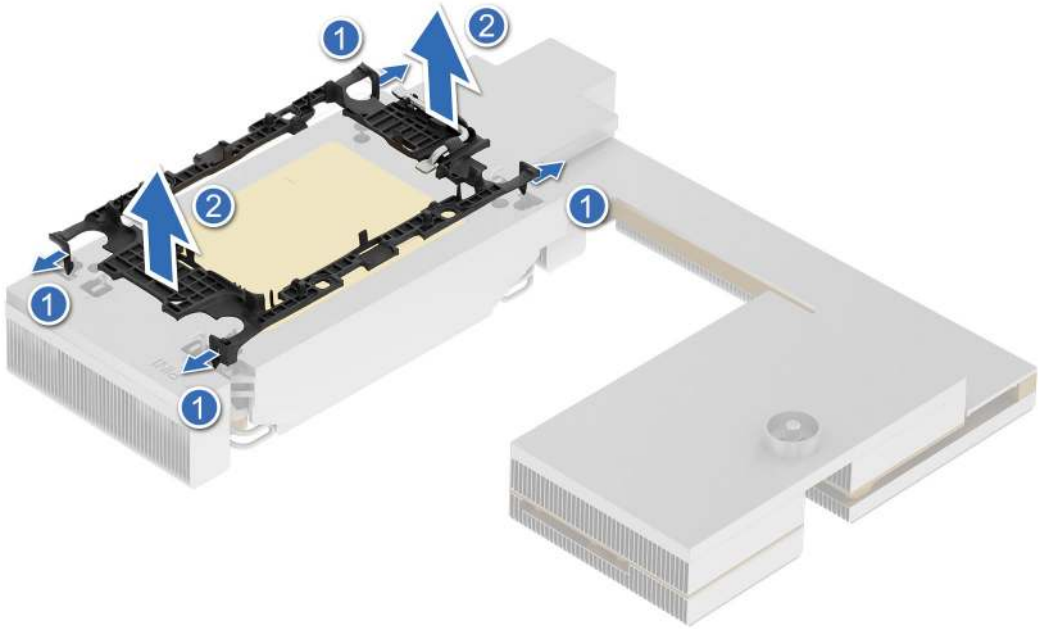

Figure 107. Removing the retaining clip

Next steps

Replace the processor.

Installing the processor

Prerequisites

1. Follow the safety guidelines listed in the Safety instructions.
2. Follow the procedure listed in the Before working inside your system.
3. Remove the processor heat sink module.

Steps

1. Place the processor in the processor tray.

   NOTE: Ensure the pin 1 indicator on the processor tray is aligned with the pin 1 indicator on the processor.

2. Place the retaining clip on top of the processor in the processor tray, aligning pin 1 indicator on the processor.

   NOTE: Ensure the pin 1 indicator on the retaining clip is aligned with the pin 1 indicator on the processor before placing the retaining clip on the processor.

   NOTE: Before you install the heat sink, ensure to place the processor and retaining clip in the tray.

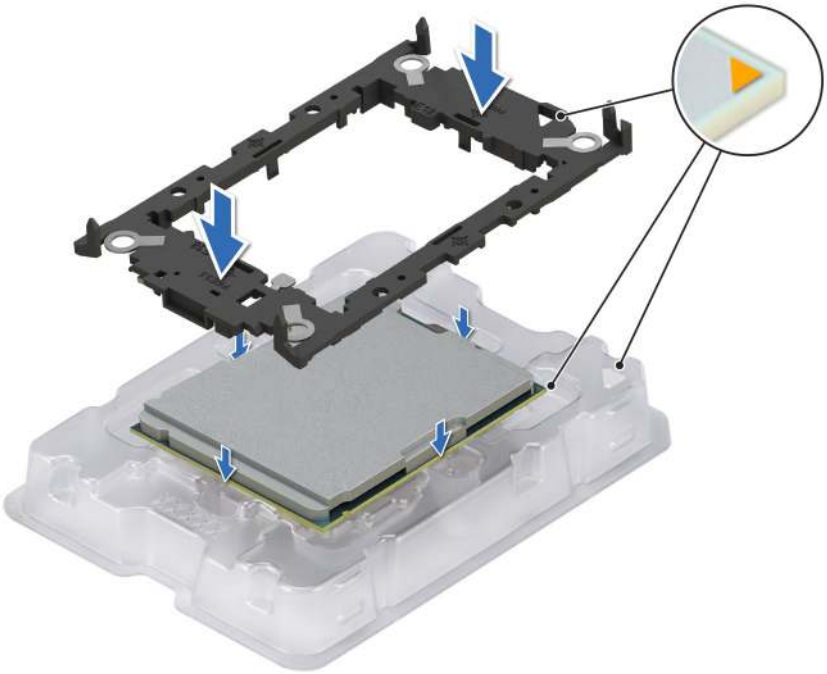

Figure 108. Installing the retaining clip

3. Align the processor with a retaining clip, by using your fingers press the retaining clip on all the four sides until it clicks into place.

   NOTE: Ensure that the processor is securely latched to the retaining clip.

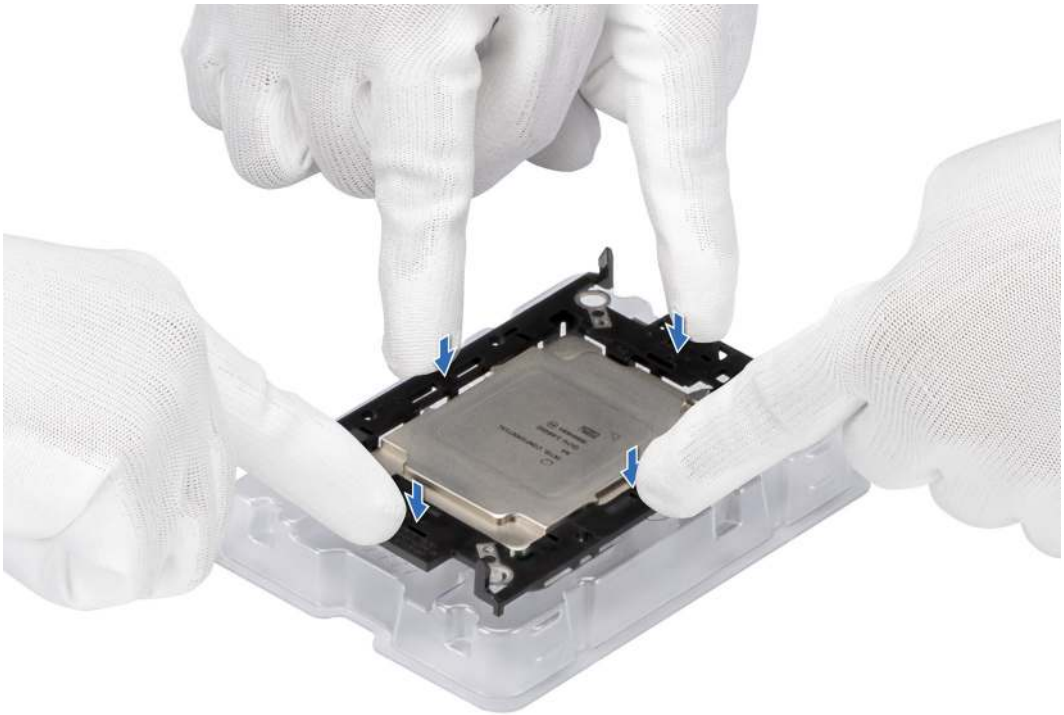

Figure 109. Press the retaining clip on the four sides

4. If you are using an existing heat sink, remove the thermal grease from the heat sink by using a clean lint-free cloth.
5. Apply the thermal grease in a thin spiral design on the bottom of the heat sink.

   CAUTION: Applying too much thermal grease can result in excess grease coming in contact with and contaminating the processor socket.

   NOTE: The thermal grease syringe is intended for single use only. Dispose the syringe after you use it.

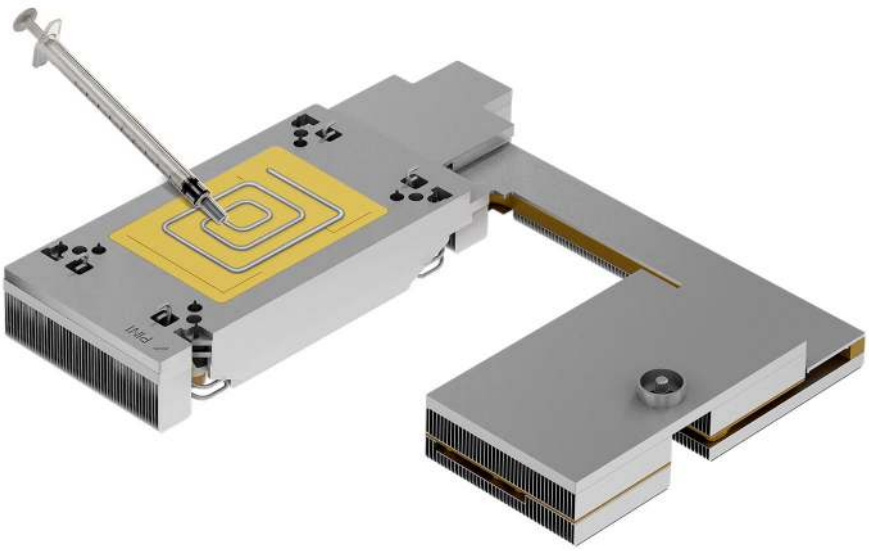

Figure 110. Applying thermal grease

6. For a new heat sink, pull and remove the plastic cover from the base of the heat sink.

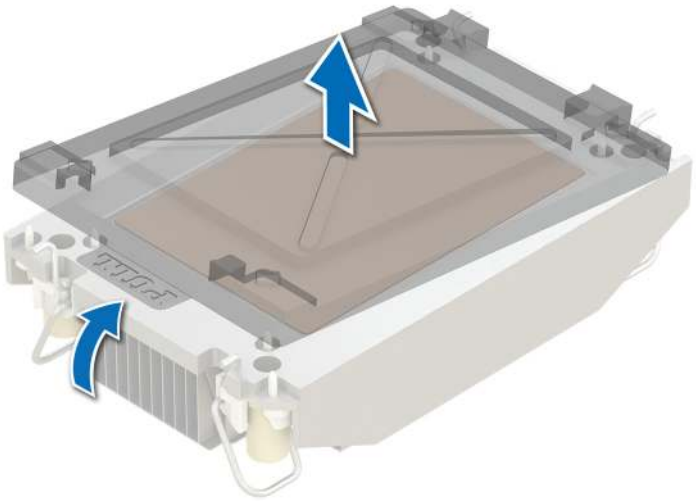

Figure 111. Removing the cover

7. Place the heat sink on the processor and press the base of the heat sink until the retaining clip locks onto the heat sink at all the four corners.

CAUTION: To avoid damaging the fins on the heat sink, do not press down on the heat sink fins.

NOTE:

- Ensure latching features on retaining clip, and heat sink are aligned during assembly.
- Ensure that the pin 1 indicator on the heat sink is aligned with the pin 1 indicator on the retaining clip before placing the heat sink onto the retaining clip.

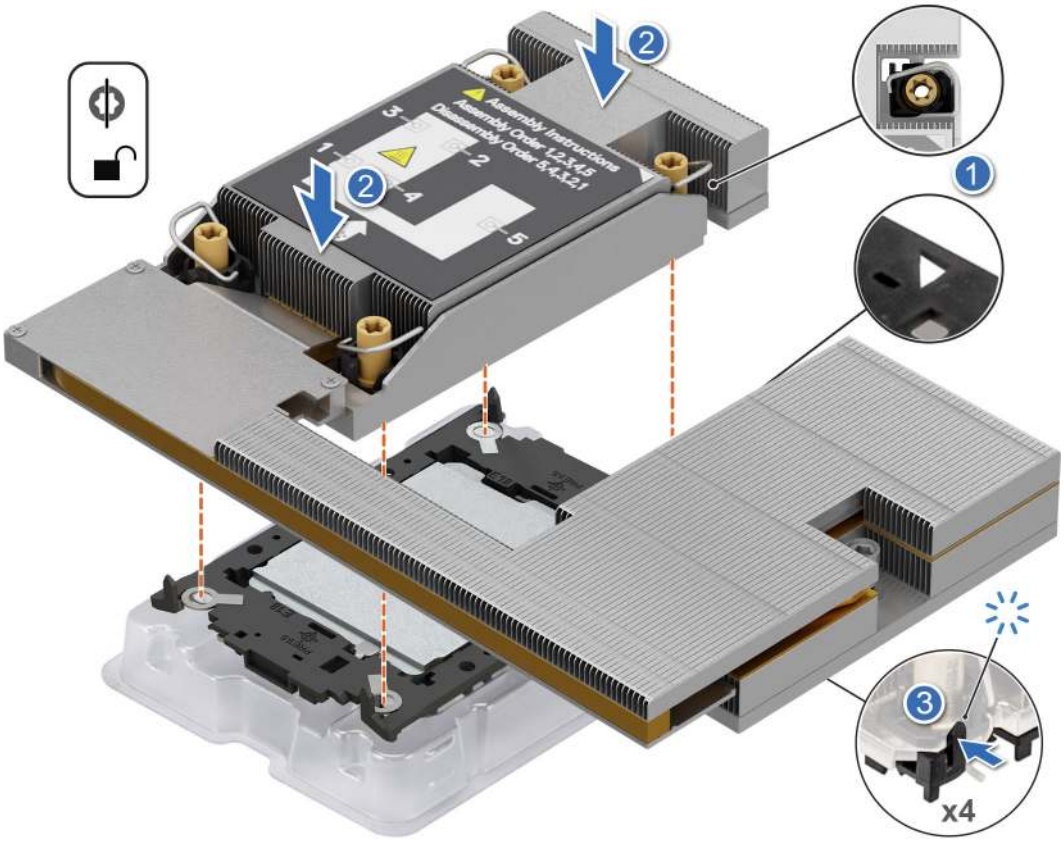

Figure 112. Installing the heat sink onto the processor

Next steps

1. Install the processor heat sink module.
2. Follow the procedure listed in After working inside your system.

Installing the processor and heat sink module

Prerequisites

Never remove the heat sink from a processor unless you intend to replace the processor or heat sink. The heat sink is necessary to maintain proper thermal conditions.

1. Follow the safety guidelines listed in the Safety instructions.
2. Follow the procedure listed in the Before working inside your system.
3. If installed, remove the processor dust cover.
4. The system supports different to types of heatsinks and the procedure to install them are similar.

Steps

1. Set the anti-tilt wires to the unlocked position on the heat sink (inward position).
2. Align the pin 1 indicator of the heat sink to the HPM board, and then place the processor heat sink module (PHM) on the processor socket.

   CAUTION: To avoid damaging the fins on the heat sink, do not press down on the heat sink fins.

   NOTE: Ensure that the PHM is held parallel to the HPM board to prevent damaging the components.

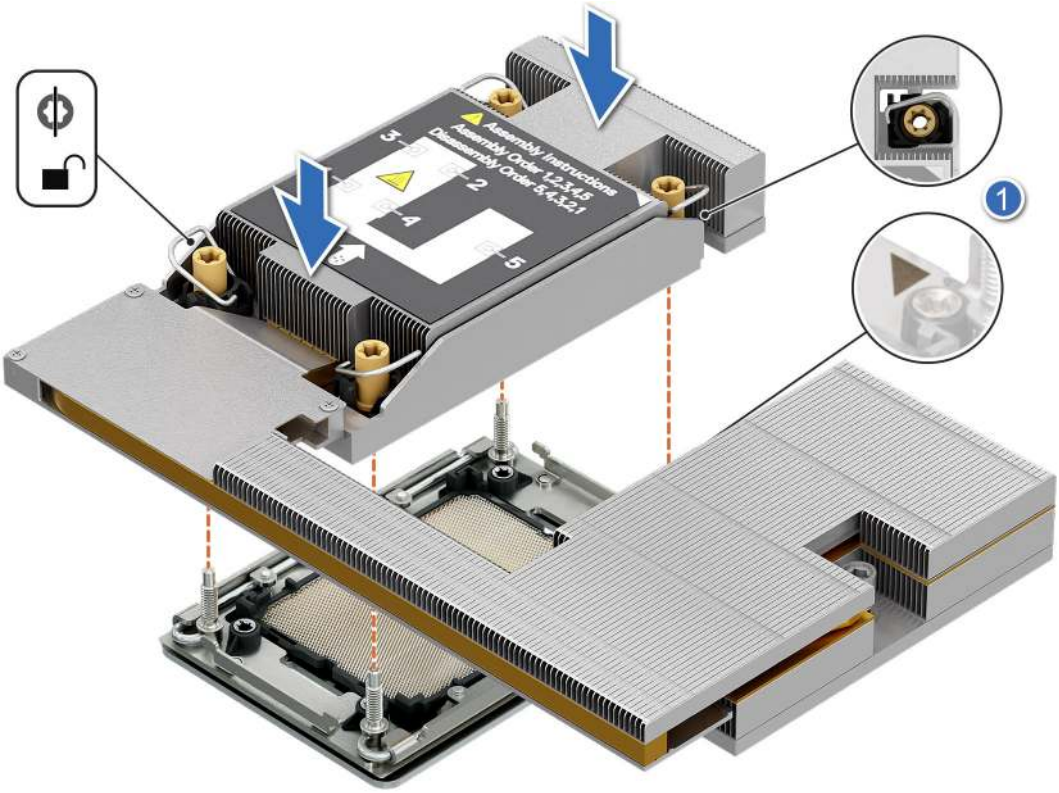

Figure 113. Installing the processor heat sink

3. Set the anti-tilt wires to the locked position (outward position), and then using the Torx T30 screwdriver, tighten the captive nuts (8 in-lbf) on the heat sink in the order below or as shown on the heatsink module:
   a. In a random order, tighten the first nut three turns.
   b. Tighten the nut diagonally opposite to the nut that you tighten first.
   c. Repeat the procedure for the remaining two nuts.
   d. Return to the first nut to tighten it completely.
   e. Check all the nuts to ensure they are firmly secured.

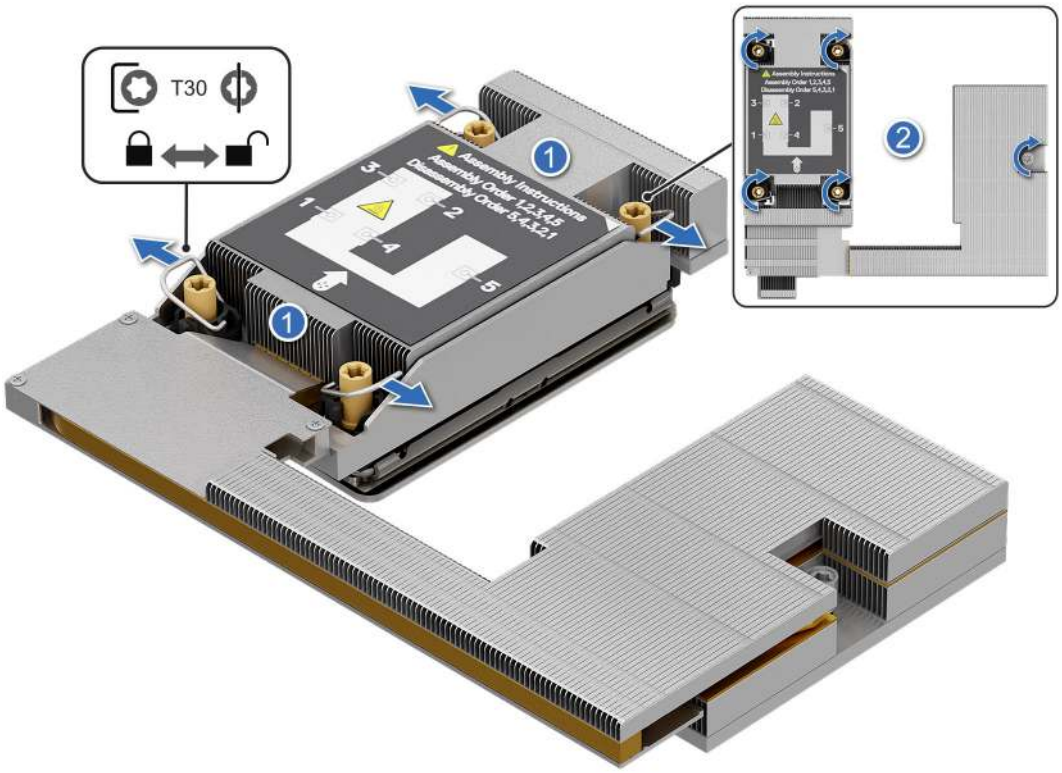

Figure 114. Set the anti-tilt wires to the locked position and tightening the nuts

Next steps

1. Follow the procedure listed in the After working inside your system.

PERC cards

Removing the fPerc module

Prerequisites

1. Follow the safety guidelines listed in the Safety instructions.
2. Follow the procedure listed in the Before working inside your system.
3. Remove the system cover.
4. Remove the air shroud.
5. Remove the drive backplane cover.
6. Disconnect the power cable and other required cables, observe the cable routing.

NOTE: See cable routing section.

Steps

1. Pull the plunger to disengage the fPERC module from the system.
2. Slide the fPERC module towards the right of the system and lift it from the system.

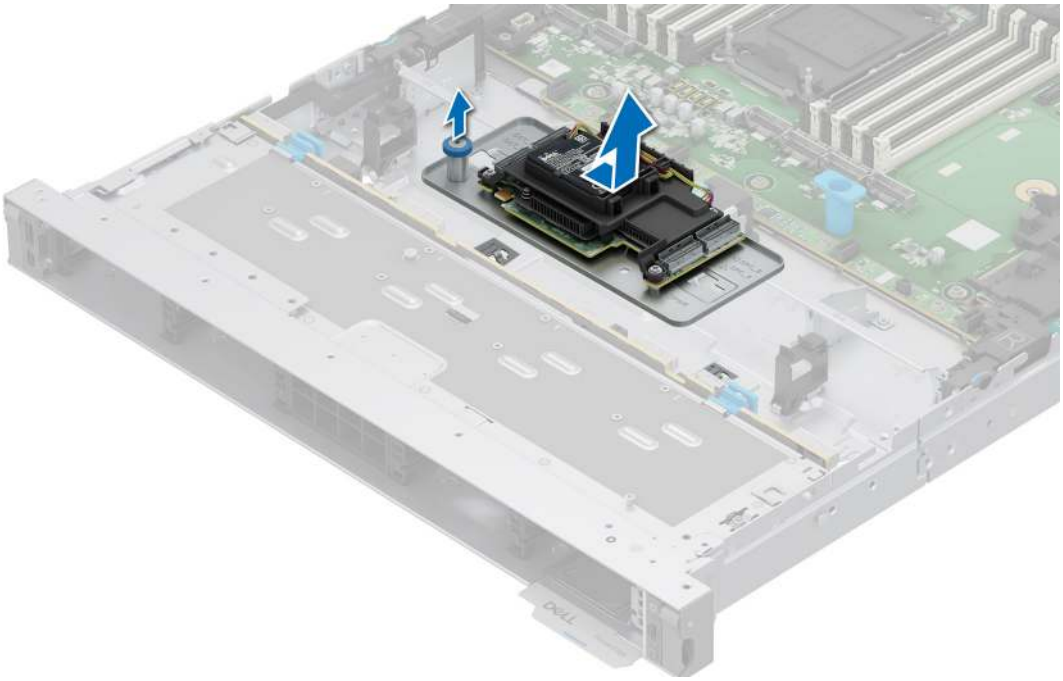

Figure 115. Removing the fPerc module

Next steps

1. Replace the fPERC module.

Installing the fPerc module

Prerequisites

1. Follow the safety guidelines listed in the Safety instructions.
2. Follow the procedure listed in the Before working inside your system.
3. Remove the system cover.
4. Remove the air shroud.
5. Remove the drive backplane cover.
6. Disconnect the power cable and other required cables, observe the cable routing.

NOTE: See cable routing section.

Steps

1. Insert the fPER module at an angle and place it flat when it is below the backplane connectors.
2. Slide the fPERC module towards the left of the system and ensure the plunger locks in place.

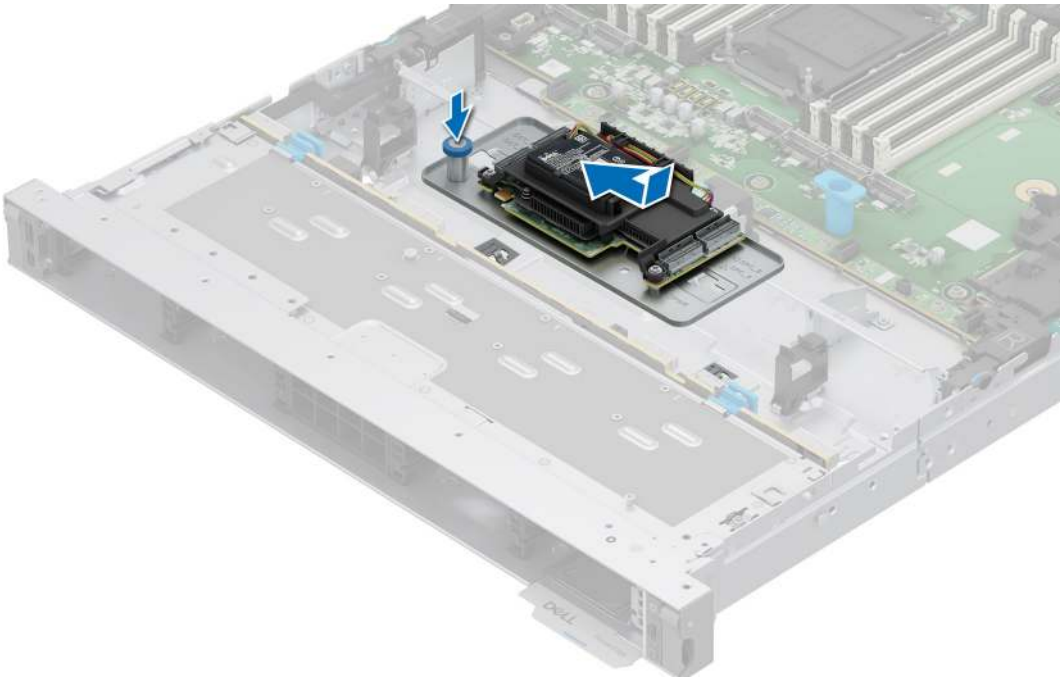

Figure 116. Installing the fPerc module

Next steps

1. Connect all the cables, and ensure that all the cables are routed through the respective cable clip.

   NOTE: See cable routing section.

2. Install the drive backplane cover.
3. Install the air shroud.
4. Install the system cover
5. Follow the procedure listed in After working inside your system.

Expansion cards and expansion card risers

NOTE: When an expansion card is not supported or missing, the iDRAC logs an event. This does not prevent your system from booting. However, if a F1/F2 pause occurs with an error message, see *Troubleshooting expansion cards* section in the *PowerEdge Servers Troubleshooting Guide* at PowerEdge manuals.

Expansion card installation guidelines

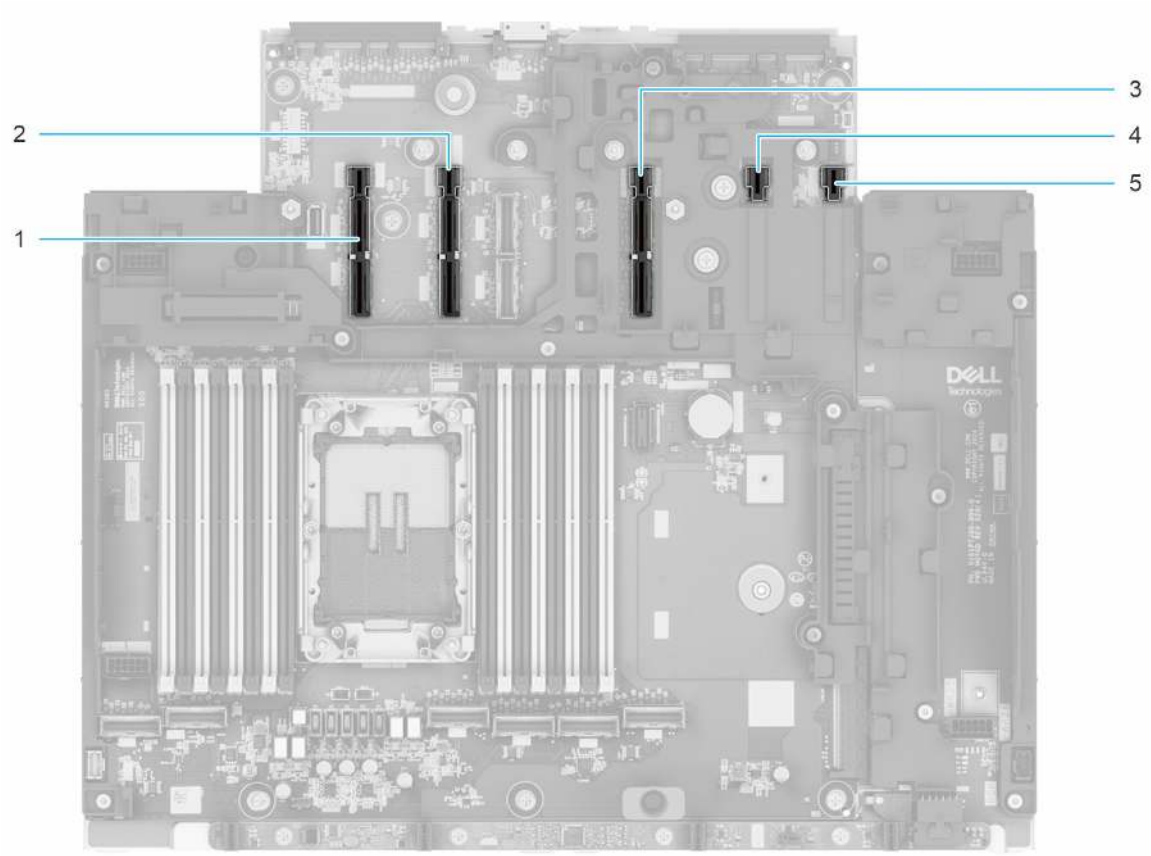

Figure 117. Expansion card riser slot connectors

1. Riser connector (SL11/SL12/PWR11/PWR12)
2. Riser connector (SL13/SL14/PWR13/PWR14)
3. Riser connector (SL15/SL16/PWR15/PWR16)
4. Riser connector (PWR17/PWR18)
5. Riser connector (PWR19/PWR20)

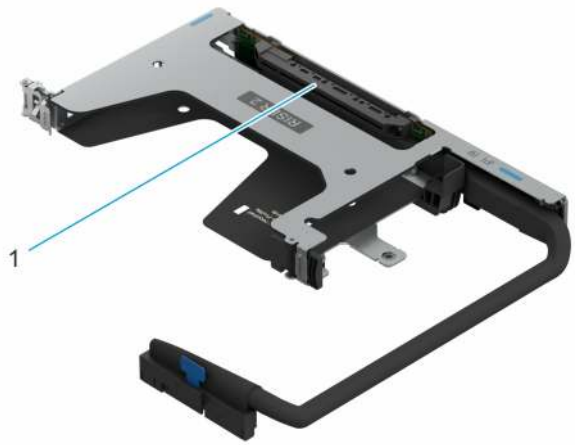

Figure 118. Rear Riser 2 (R2q)

1. Slot 1

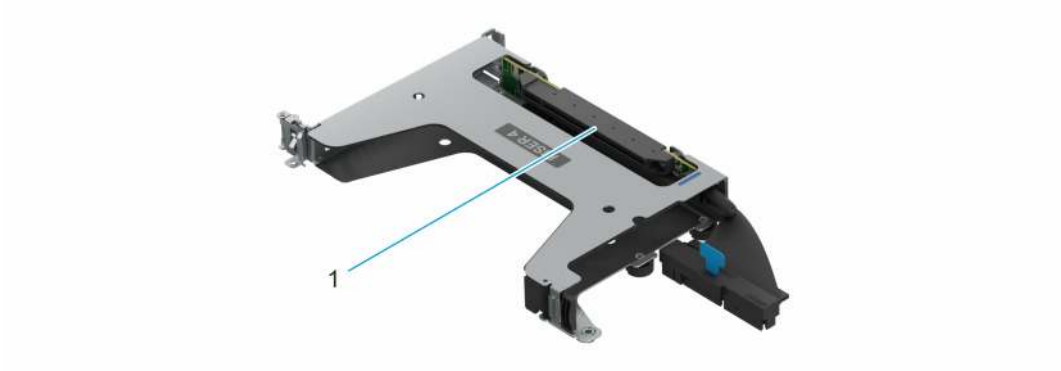

Figure 119. Riser 4 (R4b)

1. Slot 4

Figure 120. Riser 2 (R2k)

1. Slot 1

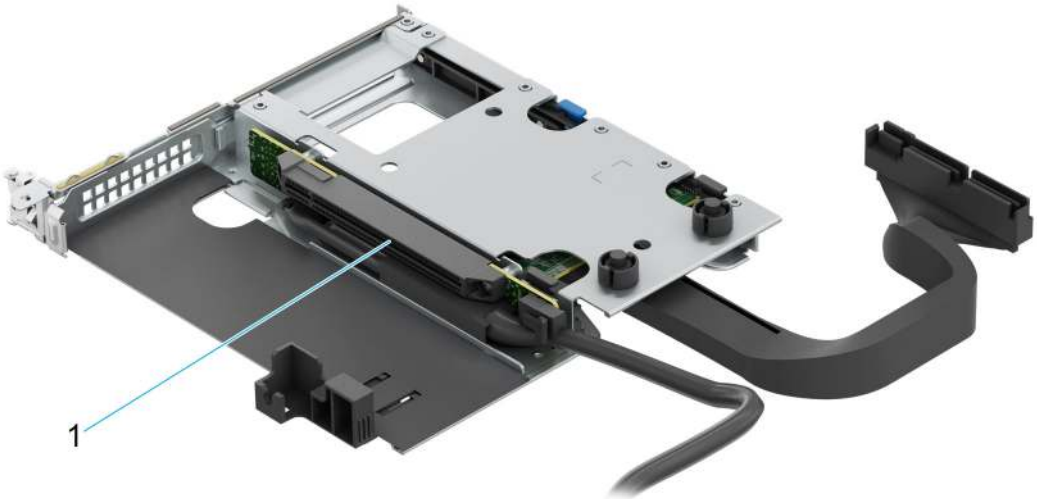

Figure 121. Riser 2 (R2v)

1. Slot 1

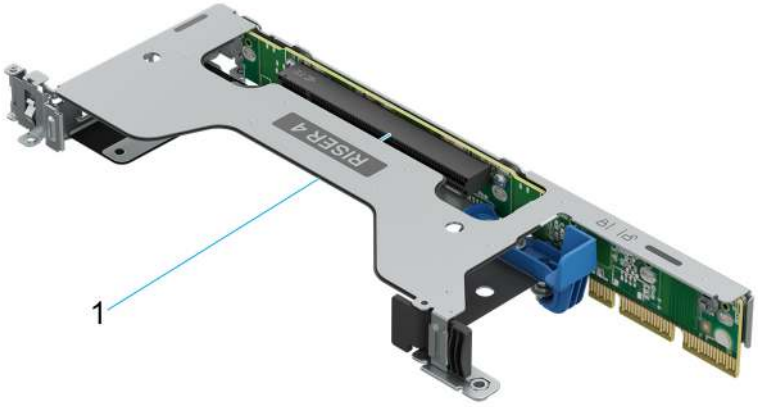

Figure 122. Riser 4 (R4a)

1. Slot 4

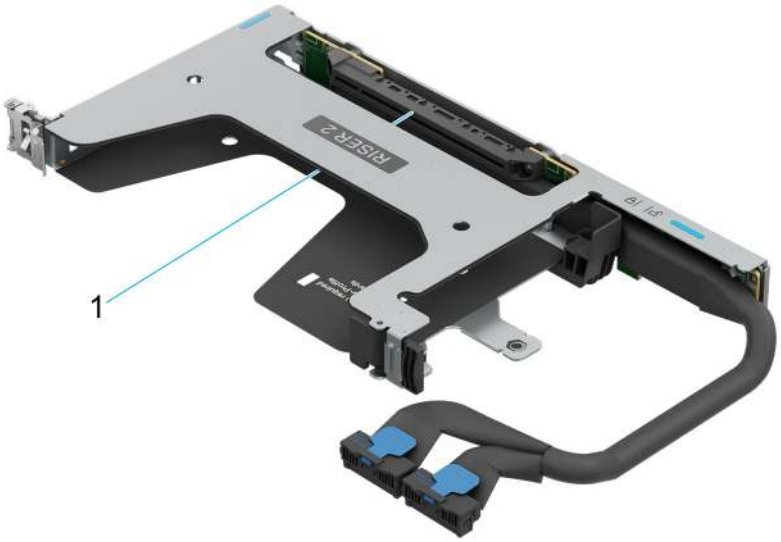

Figure 123. Riser 2 (R2t)

1. Slot 1

NOTE: The expansion-card slots are not hot-swappable.

The following table provides guidelines for installing expansion cards to ensure proper cooling and mechanical fit. The expansion cards with the highest priority should be installed first using the slot priority indicated. All the other expansion cards should be installed in the card priority and slot priority order.

Expansion card riser configurations

Table 80. Expansion card riser configurations

Riser Configurations (RC)	Expansion card risers	PCIe Slots	Form factor	Controlling processor	Slot's electrical bandwidth/ physical connector
RC 0: No Riser	OCP	5	OCP	Processor 0	PCIe Gen5 x16 (OCP 4C+ connector)
	Rear BOSS-N1	3	BOSS-N1	Processor 0	PCIe Gen3 x4 (1C connector)
RC 1 (rear): 1x16LP(G5) + 1x16OCP(G5) + 1x8LP(G5)	R2u	1	Low Profile	Processor 0	PCIe Gen5 x8 (x16 connector)
	R4a	4	Low Profile	Processor 0	PCIe Gen5 x16 (x16 connector)
	BOSS-N1	3	BOSS-N1	Processor 0	PCIe Gen4 x4 (1C connector)
	OCP	5	OCP	Processor 0	PCIe Gen5 x16 (OCP 4C+ connector)
RC 2 (rear): 2x16LP(G5) + Front BOSS	Rf1c	31	Full Height	Processor 0	PCIe Gen5 x8 (x16 connector)
	Rf1c	32	Full Height	Processor 0	PCIe Gen5 x16 (x16 connector)
	BOSS-N1	34	BOSS-N1	Processor 0	PCIe Gen4 x4 (1C connector)
RC 3 (front): 2x16OCP(G5)	RF1d	31	OCP	Processor 0	PCIe Gen5 x16 (OCP 4C+ connector)
		32	OCP	Processor 0	PCIe Gen5 x16 (OCP 4C+ connector)
	BOSS-N1	34	BOSS-N1	Processor 0	PCIe Gen3 x4 (1C connector)
RC 4 (rear): 2x16LP(G5) + Front BOSS +	Rf1c	31	Full Height	Processor 0	PCIe Gen5 x8 (x16 connector)
	Rf1c	32	Full Height	Processor 0	PCIe Gen5 x16 (x16 connector)
	BOSS-N1	34	BOSS-N1	Processor 0	PCIe Gen3 x4 (1C connector)
	R2t	1	Full Height	Processor 0	PCIe Gen5 x16 (x16 connector)
RC 5 (rear): 4x16LP(G5) + Front BOSS +2 x16 FLOP OCP(G5)	Rf1d	31	OCP	Processor 0	PCIe Gen5 x8 (x16 connector)
	Rf1d	32	OCP	Processor 0	PCIe Gen5 x8 (x16 connector)
	BOSS-N1	34	BOSS-N1	Processor 0	PCIe Gen3 x4 (1C connector)
	R2t	1	Full Height	Processor 0	PCIe Gen5 x16 (x16 connector)

Table 80. Expansion card riser configurations (continued)

Riser Configurations (RC)	Expansion card risers	PCIe Slots	Form factor	Controlling processor	Slot's electrical bandwidth/ physical connector
	R4b	4	Full Height	Processor 0	PCIe Gen5 x16 (x16 connector)
RC 6 (rear): 2x16LP(G5) + 1x16OCP(G5) + 1 x8/x16 OCP(G5)	R2q	1	Full Height	Processor 0	PCIe Gen5 x16 (x16 connector)
	R4b	4	Full Height	Processor 0	PCIe Gen5 x16 (x16 connector)
	BOSS-N1	3	BOSS-N1	Processor 0	PCIe Gen3 x4 (1C connector)
	OCP	5	OCP	Processor 0	PCIe Gen5 x16 (OCP 4C+ connector)
RC 7 (rear): 2x16LP(G5) + 1x16OCP(G5) + 1 x16 FLOP OCP(G5)	R2k	1	Low Profile	Processor 0	PCIe Gen5 x16 (x16 connector)
		2	OCP		
	BOSS (Optional)	3	BOSS-N1	Processor 0	PCIe Gen5 x16 (OCP 4C+ connector)
	R4a	4	Low Profile	Processor 0	PCIe Gen5 x16 (x16 connector)
	Onboard OCP (Optional)	5	OCP	Processor 0	PCIe Gen5 x16 (OCP 4C+ connector)
RC 8 (rear): 2x16LP(G5) + 1x16OCP(G5) + 1 x16 FLOP OCP(G5)	R2v	1	Low Profile	Processor 0	PCIe Gen5 x16 (x16 connector)
		2	OCP		PCIe Gen5 x16 (OCP 4C+ connector)
	BOSS (Optional)	3	BOSS-N1	Processor 0	PCIe Gen4 x4 (1C connector)
	R4a	4	Low Profile	Processor 0	PCIe Gen5 x16 (x16 connector)
	Onboard OCP (Optional)	5	OCP	Processor 0	PCIe Gen5 x16 (OCP 4C+ connector)

NOTE: Riser F1c and riser 2t supports DPU cards.

NOTE: The system supports either Front I/O configuration (system with front risers) or Rear I/O configuration (system with rear risers).

Table 81. RC0: No Riser

Card type	Slot priority	Maximum number of cards
Broadcom (OCP: 200Gb)	5	1
Nvidia (OCP: 100Gb)	5	1
Broadcom (OCP: 100Gb)	5	1
Broadcom (OCP: 25Gb)	5	1

Table 81. RC0: No Riser (continued)

Card type	Slot priority	Maximum number of cards
Nvidia (OCP: 25Gb)	5	1
Intel (OCP: 10Gb)	5	1
Broadcom (OCP: 10Gb)	5	1
Intel (OCP: 1Gb)	5	1
Broadcom (OCP: 1Gb)	5	1
Santino (BOSS)	3	1
Wistron (BOSS)	3	1
FOXCONN (Front PERC12)	INT	1

Table 82. RC1. R2u+R4a

Card type	Slot priority	Maximum number of cards
Broadcom (OCP: 200Gb)	5	1
Nvidia (OCP: 100Gb)	5	1
Broadcom (OCP: 100Gb)	5	1
Broadcom (OCP: 25Gb)	5	1
Nvidia (OCP: 25Gb)	5	1
Intel (OCP: 10Gb)	5	1
Broadcom (OCP: 10Gb)	5	1
Intel (OCP: 1Gb)	5	1
Broadcom (OCP: 1Gb)	5	1
Santino (BOSS)	3	1
Wistron (BOSS)	3	1
FOXCONN (PERC Adapter12)	1	1
Nvidia (GPU)	4	1
Broadcom (NIC: 25Gb)	4	1
Nvidia (NIC: 25Gb)	4	1
Marvell (HBA: FC64)	4	1
Emulex (HBA: FC64)	4	1
QLogic (HBA: FC32)	4	1
Emulex (HBA: FC32)	4	1
FOXCONN (External Adapter)	4	1

Table 83. RC2. RF1c

Card type	Slot priority	Maximum number of cards
Nvidia (DPU: 200Gb)	31	1
Mellanox (DPU: 200Gb)	31	1
Santino (BOSS)	34	1
Wistron (BOSS)	34	1
Nvidia (GPU)	31, 32	2

Table 83. RC2. RF1c (continued)

Card type	Slot priority	Maximum number of cards
Broadcom (NIC: 200Gb)	31, 32	2
Intel (NIC: 100Gb)	31, 32	2
Nvidia (NIC: 100Gb)	31, 32	2
Broadcom (NIC: 100Gb)	31, 32	2
Broadcom (NIC: 25Gb)	31, 32	2
Nvidia (NIC: 25Gb)	31, 32	2
Marvell (HBA: FC64)	31, 32	2
Emulex (HBA: FC64)	31, 32	2
QLogic (HBA: FC32)	31, 32	2
Emulex (HBA: FC32)	31, 32	2
FOXCONN (External Adapter)	31, 32	1
NVidia BlueField-3 B3220	31	1

Table 84. RC 3: RF1d

Card type	Slot priority	Maximum number of cards
Broadcom (OCP: 200Gb)	32, 31	2
Nvidia (OCP: 100Gb)	32, 31	2
Broadcom (OCP: 100Gb)	32, 31	2
Broadcom (OCP: 25Gb)	32, 31	2
Nvidia (OCP: 25Gb)	32, 31	2
Intel (OCP: 10Gb)	32, 31	2
Broadcom (OCP: 10Gb)	32, 31	2
Intel (OCP: 1Gb)	32, 31	2
Broadcom (OCP: 1Gb)	32, 31	2
Santino (BOSS)	34	1
Wistron (BOSS)	34	1

Table 85. RC4. RF1c+R2t+R4b

Card type	Slot priority	Maximum number of cards
Nvidia (DPU: 200Gb)	1	1
Mellanox (DPU: 200Gb)	1	1
Santino (BOSS)	34	1
Wistron (BOSS)	34	1
Nvidia (GPU)	31, 32, 1, 4	4
Broadcom (NIC: 200Gb)	31, 32, 1, 4	4
Intel (NIC: 100Gb)	31, 32, 1, 4	4
Nvidia (NIC: 100Gb)	31, 32, 1, 4	4
Broadcom (NIC: 100Gb)	31, 32, 1, 4	4
Broadcom (NIC: 25Gb)	31, 32, 1, 4	4

Table 85. RC4. RF1c+R2t+R4b (continued)

Card type	Slot priority	Maximum number of cards
Nvidia (NIC: 25Gb)	31, 32, 1, 4	4
Marvell (HBA: FC64)	31, 32, 1, 4	4
Emulex (HBA: FC64)	31, 32, 1, 4	4
QLogic (HBA: FC32)	31, 32, 1, 4	4
Emulex (HBA: FC32)	31, 32, 1, 4	4
FOXCONN (External Adapter)	31, 32, 1, 4	1
NVidia BlueField-3 B3220	1	1

Table 86. RC5. RF1d+R2t+R4b

Card type	Slot priority	Maximum number of cards
Nvidia (DPU: 200Gb)	1	1
Mellanox (DPU: 200Gb)	1	1
Broadcom (OCP: 200Gb)	32, 31	2
Nvidia (OCP: 100Gb)	32, 31	2
Broadcom (OCP: 100Gb)	32, 31	2
Broadcom (OCP: 25Gb)	32, 31	2
Nvidia (OCP: 25Gb)	32, 31	2
Intel (OCP: 10Gb)	32, 31	2
Broadcom (OCP: 10Gb)	32, 31	2
Intel (OCP: 1Gb)	32, 31	2
Broadcom (OCP: 1Gb)	32, 31	2
Santino (BOSS)	34	1
Wistron (BOSS)	34	1
Nvidia (GPU)	1, 4	2
Broadcom (NIC: 200Gb)	1, 4	2
Intel (NIC: 100Gb)	1, 4	2
Nvidia (NIC: 100Gb)	1, 4	2
Broadcom (NIC: 100Gb)	1, 4	2
Broadcom (NIC: 25Gb)	1, 4	2
Nvidia (NIC: 25Gb)	1, 4	2
Marvell (HBA: FC64)	1, 4	2
Emulex (HBA: FC64)	1, 4	2
QLogic (HBA: FC32)	1, 4	2
Emulex (HBA: FC32)	1, 4	2
FOXCONN (External Adapter)	1, 4	1
NVidia BlueField-3 B3220	1	1

Table 87. RC 6: R2q+R4b

Card type	Slot priority	Maximum number of cards
Nvidia (DPU: 200Gb)	1	1
Mellanox (DPU: 200Gb)	1	1
Broadcom (OCP: 200Gb)	5	1
Nvidia (OCP: 100Gb)	5	1
Broadcom (OCP: 100Gb)	5	1
Broadcom (OCP: 25Gb)	5	1
Nvidia (OCP: 25Gb)	5	1
Intel (OCP: 10Gb)	5	1
Broadcom (OCP: 10Gb)	5	1
Intel (OCP: 1Gb)	5	1
Broadcom (OCP: 1Gb)	5	1
Santino (BOSS)	3	1
Wistron (BOSS)	3	1
FOXCONN (Front PERC12)	INT	1
Nvidia (GPU)	1, 4	2
Broadcom (NIC: 200Gb)	1, 4	2
Intel (NIC: 100Gb)	1, 4	2
Nvidia (NIC: 100Gb)	1, 4	2
Broadcom (NIC: 100Gb)	1, 4	2
Broadcom (NIC: 25Gb)	1, 4	2
Nvidia (NIC: 25Gb)	1, 4	2
Marvell (HBA: FC64)	1, 4	2
Emulex (HBA: FC64)	1, 4	2
QLogic (HBA: FC32)	1, 4	2
Emulex (HBA: FC32)	1, 4	2
FOXCONN (External Adapter)	1, 4	1
NVidia BlueField-3 B3220	1	1

Table 88. RC 7: R2k+R4a

Card type	Slot priority	Maximum number of cards
Broadcom (OCP: 200Gb)	5, 2	2
Nvidia (OCP: 100Gb)	5, 2	2
Broadcom (OCP: 100Gb)	5, 2	2
Broadcom (OCP: 25Gb)	5, 2	2
Nvidia (OCP: 25Gb)	5, 2	2
Intel (OCP: 10Gb)	5, 2	2
Broadcom (OCP: 10Gb)	5, 2	2
Intel (OCP: 1Gb)	5, 2	2

Table 88. RC 7: R2k+R4a (continued)

Card type	Slot priority	Maximum number of cards
Broadcom (OCP: 1Gb)	5, 2	2
Santino (BOSS)	3	1
Wistron (BOSS)	3	1
FOXCONN (Front PERC12)	INT	1
Nvidia (GPU)	1, 4	2
Broadcom (NIC: 25Gb)	1, 4	2
Nvidia (NIC: 25Gb)	1, 4	2
Marvell (HBA: FC64)	1, 4	2
Emulex (HBA: FC64)	1, 4	2
QLogic (HBA: FC32)	1, 4	2
Emulex (HBA: FC32)	1,4	2
FOXCONN (External Adapter)	1, 4	1

Table 89. RC 8: R2v+R4a

Card type	Slot priority	Maximum number of cards
Broadcom (OCP: 200Gb)	5, 2	2
Nvidia (OCP: 100Gb)	5, 2	2
Broadcom (OCP: 100Gb)	5, 2	2
Broadcom (OCP: 25Gb)	5, 2	2
Nvidia (OCP: 25Gb)	5, 2	2
Intel (OCP: 25Gb)	5, 2	2
Intel (OCP: 10Gb)	5, 2	2
Broadcom (OCP: 10Gb)	5, 2	2
Intel (OCP: 1Gb)	5, 2	2
Broadcom (OCP: 1Gb)	5, 2	2
Santino (BOSS)	3	1
Wistron (BOSS)	3	1
FOXCONN (Front PERC12)	INT	1
Nvidia (GPU)	1, 4	2
Broadcom (NIC: 25Gb)	1, 4	2
Nvidia (NIC: 25Gb)	1, 4	2
Marvell (HBA: FC64)	1, 4	2
Emulex (HBA: FC64)	1, 4	2
QLogic (HBA: FC32)	1, 4	2
Emulex (HBA: FC32)	1, 4	2
FOXCONN (External Adapter)	1, 4	1

Removing the rear expansion card risers

Prerequisites

1. Follow the safety guidelines listed in the Safety instructions.
2. Follow the procedure listed in the Before working inside your system.
3. Remove the system cover
4. If applicable, disconnect the cables from the expansion card or HPM board.

Steps

1. For Riser 2q, disconnect the cable from the connector and unlock the riser latch. Lift the expansion card riser to disengage it from the riser connector, and carefully remove it from the guide pin.

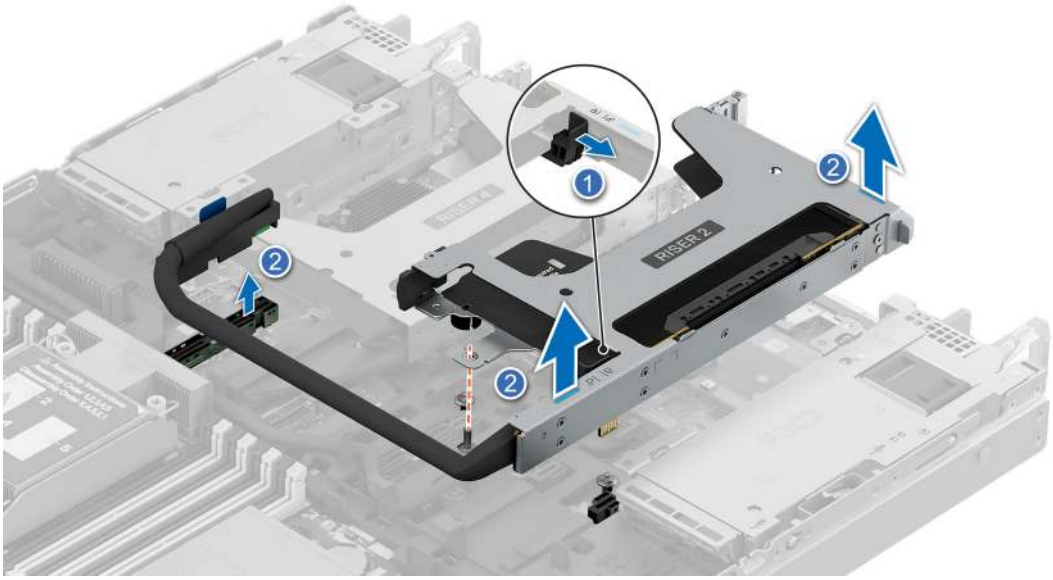

Figure 124. Removing the rear expansion card riser 2q (R2q)

2. For Riser 2v, disconnect the cable from the connector. Lift the expansion card riser to disengage it from the connector and guide pin on the HPM board. Carefully remove the riser from the system.

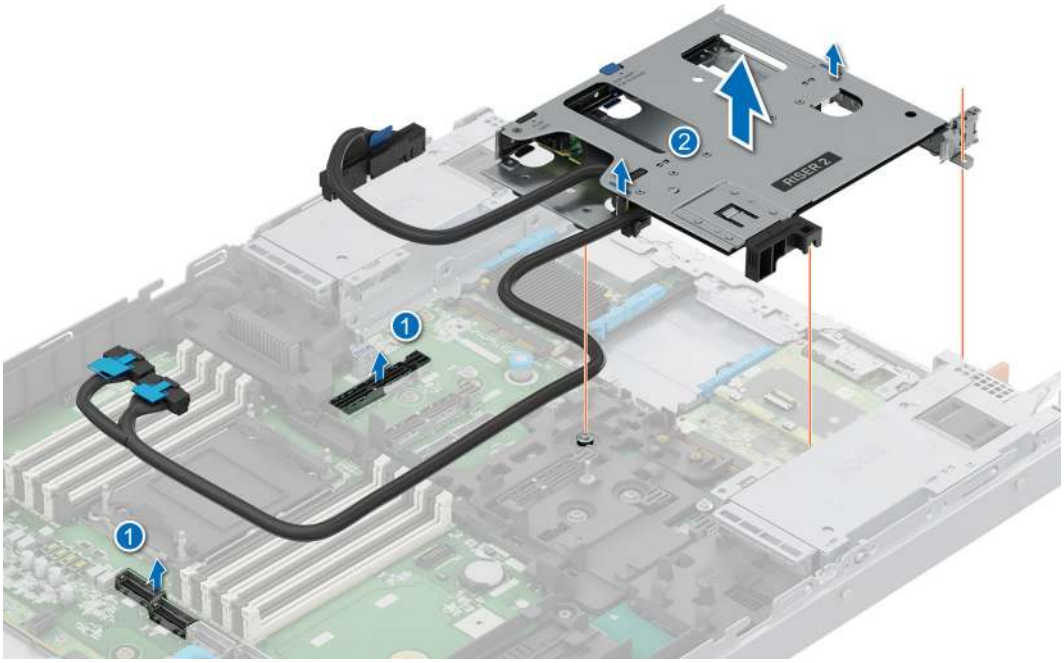

Figure 125. Removing the rear expansion card riser 2v (R2v)

3. For Riser 2k, disconnect the cable from the connector. Lift the expansion card riser to disengage it from the connector and guide pin on the HPM board. Carefully remove the riser from the system.

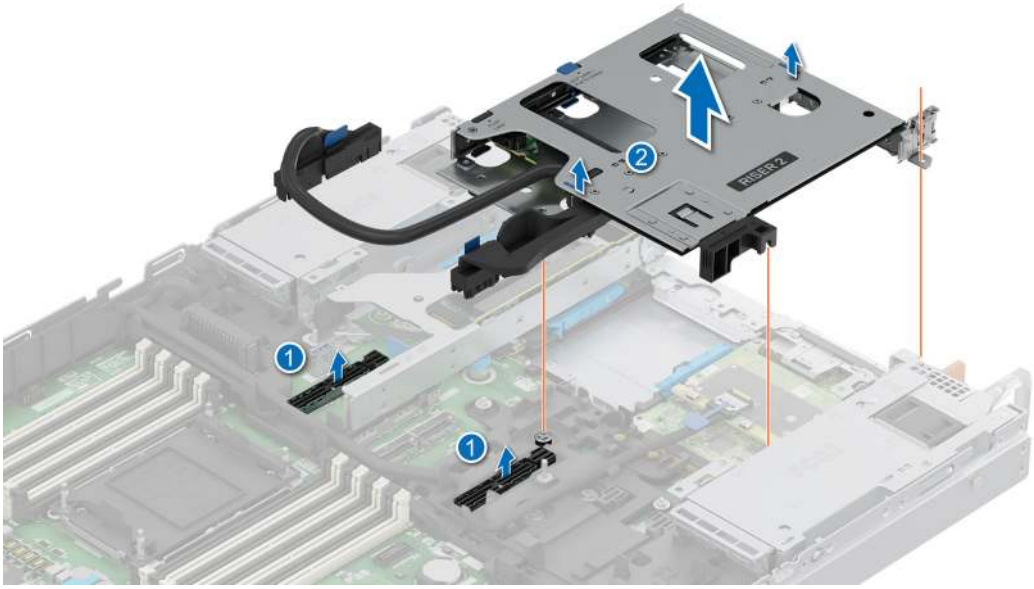

Figure 126. Removing the rear expansion card riser 2k (R2k)

4. For Riser 4a, unlock the riser latch. Lift the expansion card riser to disengage it from the connector and guide pin on the HPM board. Carefully remove the riser from the system.

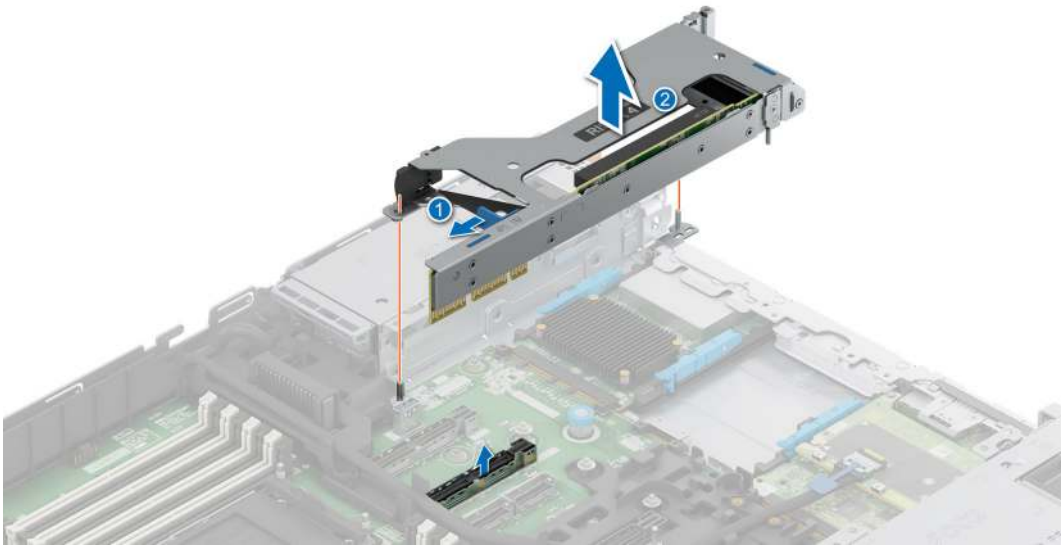

Figure 127. Removing the rear expansion card riser 4a (R4a)

5. For Riser 4b, disconnect the cable from the connector. Lift the expansion card riser to disengage it from the connector and guide pin on the HPM board. Carefully remove the riser from the system.

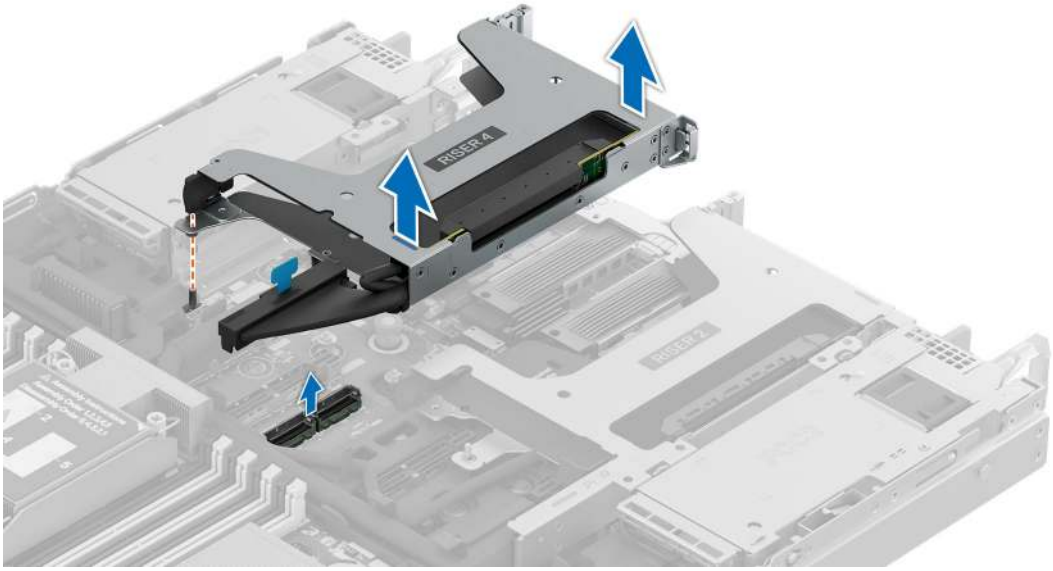

Figure 128. Removing the rear expansion card riser 4b (R4b)

Next steps

1. Follow the procedure listed in After working inside your system.
2. Replace the rear expansion card risers
3. Replace the system cover.

.

Installing the rear expansion card risers

Prerequisites

1. Follow the safety guidelines listed in the Safety instructions.

2. Follow the procedure listed in the Before working inside your system.
3. If removed, install the expansion cards into the rear expansion card risers.

CAUTION: Do not install GPUs, network cards, or other PCIe devices on your system that are not validated and tested by Dell. Damage caused by unauthorized and invalidated hardware installation will null and void the system warranty.

Steps

1. For Riser 2q, ensure the riser latch is unlocked, align the riser with the connector and guide pin, lower it into place, press to ensure the riser is fully seated on the connector, and then push the riser latch to lock.

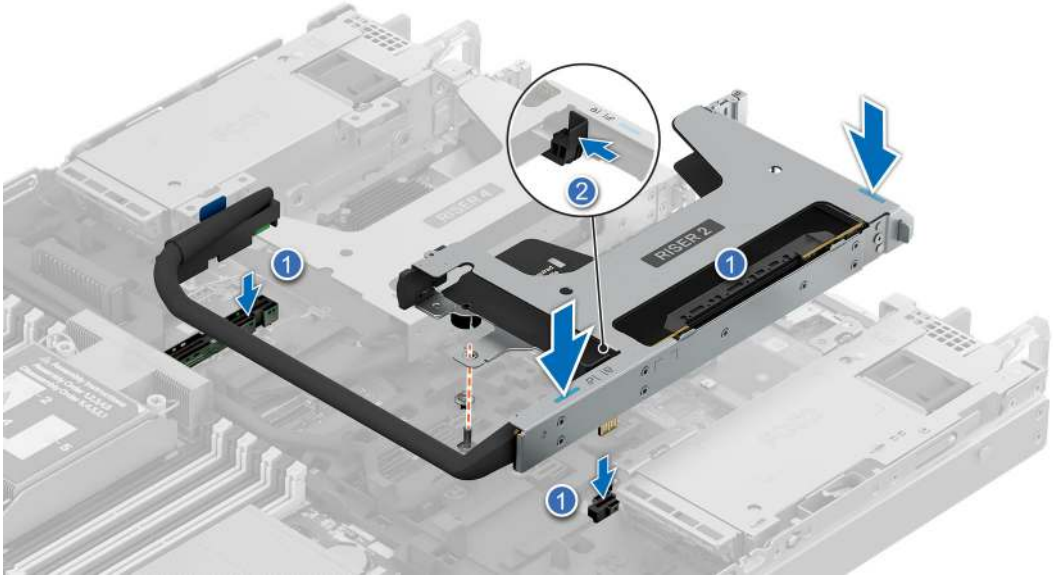

Figure 129. Installing the rear expansion card riser 2q (R2q)

2. For Riser 4b, reconnect the cable first to the connector. Align the expansion card riser with the connector and the riser guide pin on the HPM board. Lower the expansion card riser into place until the expansion card riser connector is fully seated in the connector. Press the touch points (indicated by blue line) to ensure proper engagement.

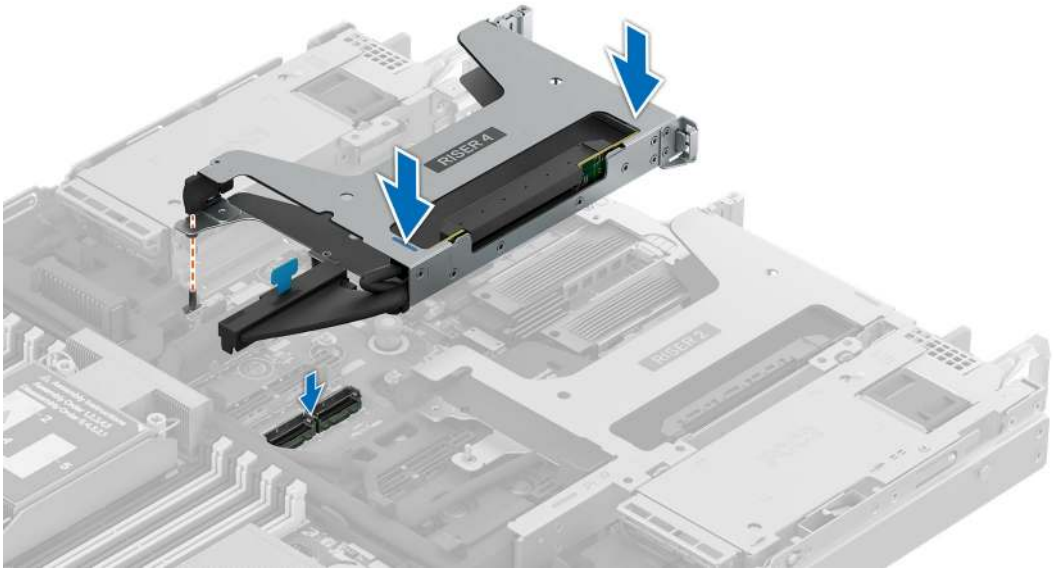

Figure 130. Installing the rear expansion card riser 4b (R4b)

3. For Riser 2v, align the expansion card riser with the three riser guide pin on the HPM board. Lower the expansion card riser into place until the expansion card riser is fully seated . Press the touch points (indicated by blue line) to ensure proper engagement and connect the riser cables to the connectors on the HPM board.

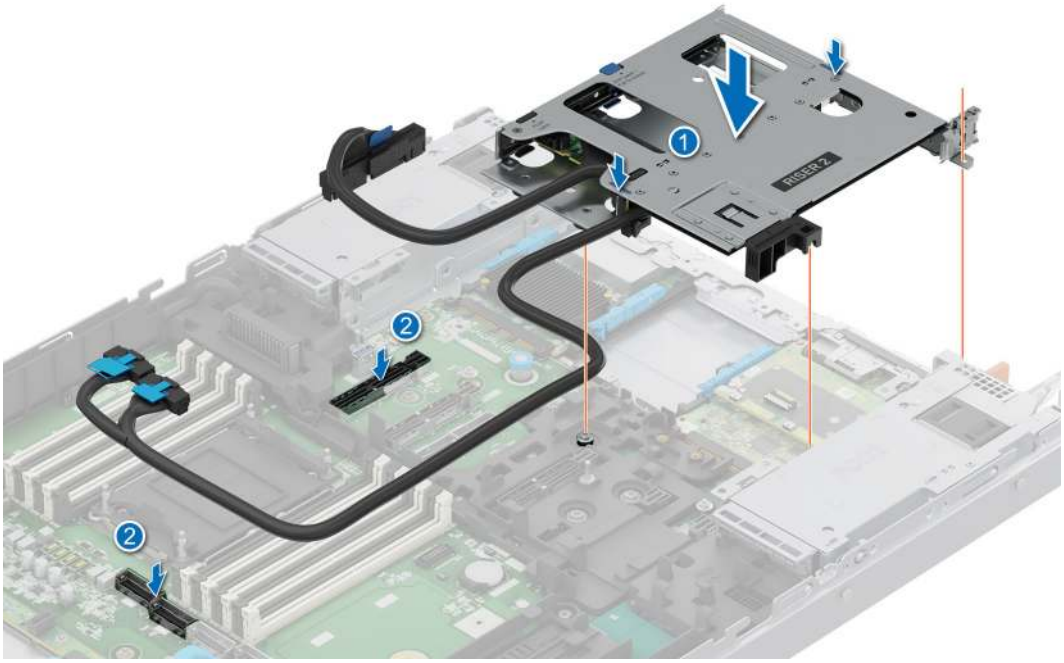

Figure 131. Installing the rear expansion card riser 2v (R2v)

4. For Riser 2k, align the expansion card riser with the three riser guide pin on the HPM board. Lower the expansion card riser into place until the expansion card riser connector is fully seated . Press the touch points (indicated by blue line) to ensure proper engagement and connect the riser cable to the connector on the HPM board.

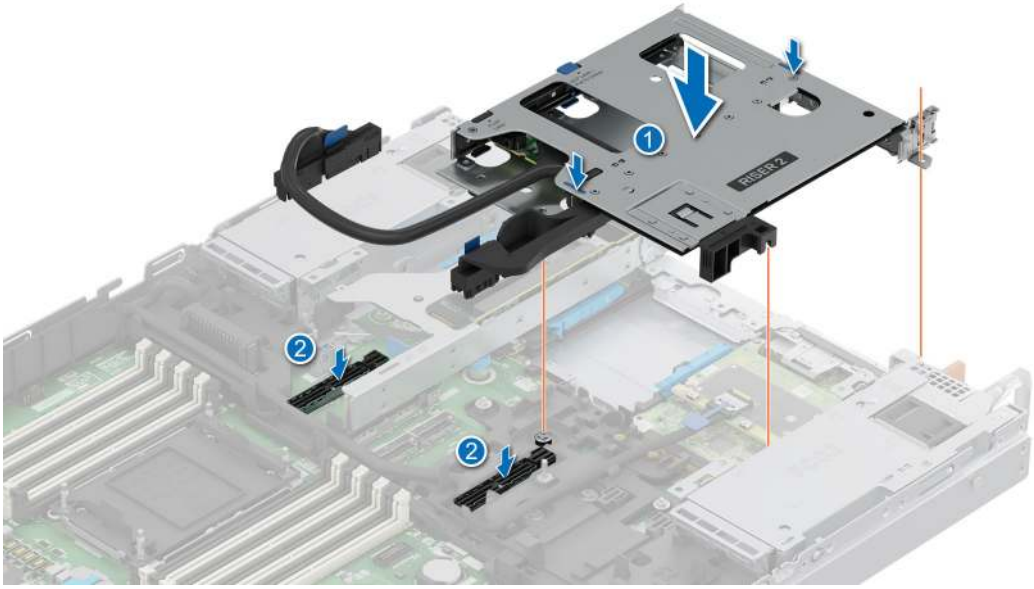

Figure 132. Installing the rear expansion card riser 2k (R2k)

5. For Riser 4a, ensure the riser latch is unlocked. Align the expansion card riser with the connector and the riser guide pin on the HPM board. Lower the expansion card riser into place until the expansion card riser connector is fully seated in the connector. Push the touch point to ensure secure engagement into connector, then lock the latch.

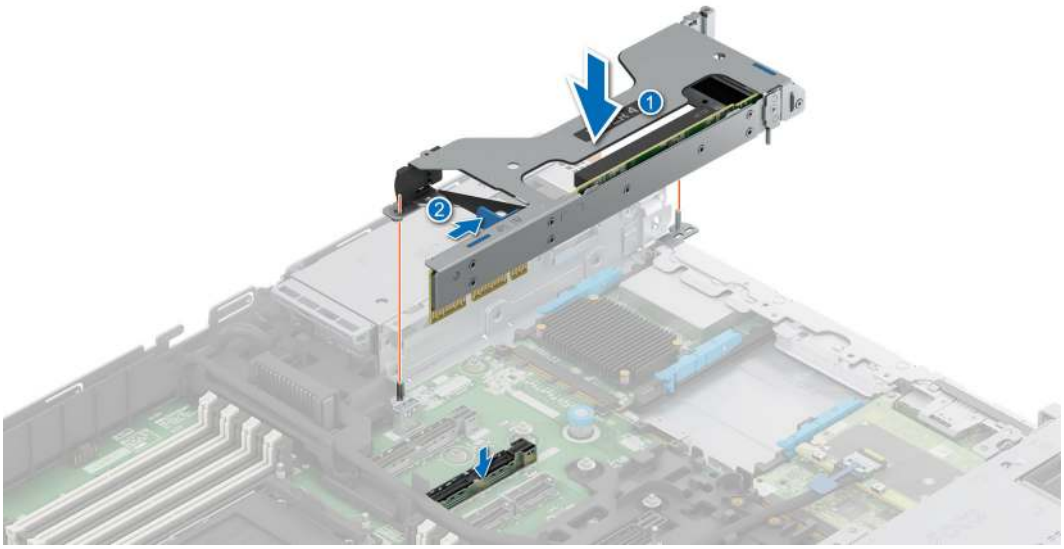

Figure 133. Installing the rear expansion card riser 4a (R4a)

Next steps

1. If required, reconnect the cables to the expansion card or HPM board.
2. Follow the procedure listed in After working inside your system.

Removing an expansion card from the expansion card riser

Prerequisites

1. Follow the safety guidelines listed in the Safety instructions.
2. Follow the procedure listed in Before working inside your system.
3. If applicable, disconnect the cables from the expansion card.
4. remove the rear expansion card riser.

Steps

1. For Riser 2q.
   a. Tilt and open the retention latches on both ends of the riser.

      NOTE: If a low-profile GPU is installed, a GPU blank will be installed.

   b. Hold the expansion card by its edges and pull the card until the card edge connector disengages from the expansion card connector on the riser.

Figure 134. Removing expansion card from the rear expansion card riser 2q

2. GPU Blank:
   a. Pull and lift the expansion card retention latch lock to open.

      NOTE: If a low-profile card is installed, the LP GPU blank will be installed on the riser wall to secure the card properly and should be removed from the wall before removing the expansion card.

Figure 135. Removing GPU blank from the rear expansion card riser 2q

   b. Hold the expansion card by its edges and pull the card until the card edge connector disengages from the expansion card connector on the riser.

Figure 136. Removing expansion card from the rear expansion card riser 4b

NOTE: The numbers on the image do not depict the exact steps. The numbers are for representation of sequence.

a. Tilt and open the retention latches on both ends of the riser.

   NOTE: If a low-profile GPU is installed, GPU blank will be installed.

b. Hold the expansion card by its edges and pull the card until the card edge connector disengages from the expansion card connector on the riser.

3. For Riser 4a:
   a. Pull and lift up the expansion card retention latch lock to open at both the ends.
   b. Hold the expansion card by its edges and pull the card until the card edge connector disengages from the expansion card connector on the riser.

   NOTE: The numbers on the image do not depict the exact steps. The numbers are for representation of sequence.

Figure 137. Removing expansion card from the rear expansion card riser 4a

4. For riser 2v or 2k:

a. To remove the expansion card, pull and open the retention latch lock to open. Hold the expansion card by its edges and pull the card until the card edge connector disengages from the expansion card connector on the riser.
b. To remove the OCP NIC card, pull the blue latch to disengage the OCP NIC card. Pull the OCP NIC card away from the system.

NOTE: The numbers on the image do not depict the exact steps. The numbers are for representation of sequence.

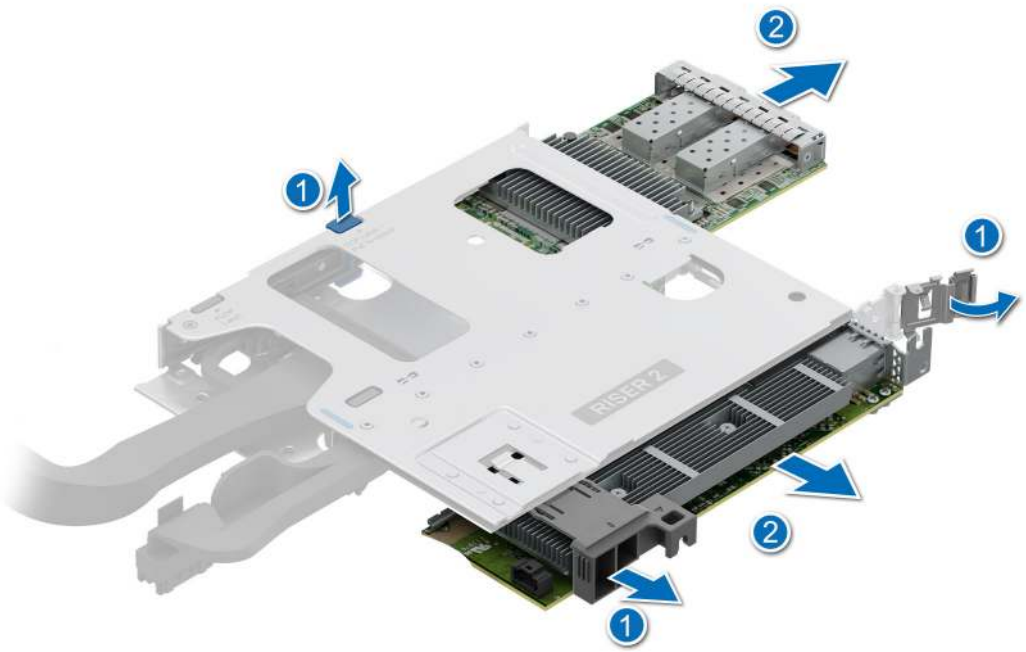

Figure 138. Removing an expansion card from the rear expansion card riser 2v or 2k

5. If the expansion card is not going to be replaced on risers, install a PCIe blank and close the card holder on both ends of the riser.

NOTE: You must install a PCIe blank over an empty expansion card slot to maintain Federal Communications Commission (FCC) certification of the system. The blank also keep dust and dirt out of the system and aid in proper cooling and airflow inside the system.

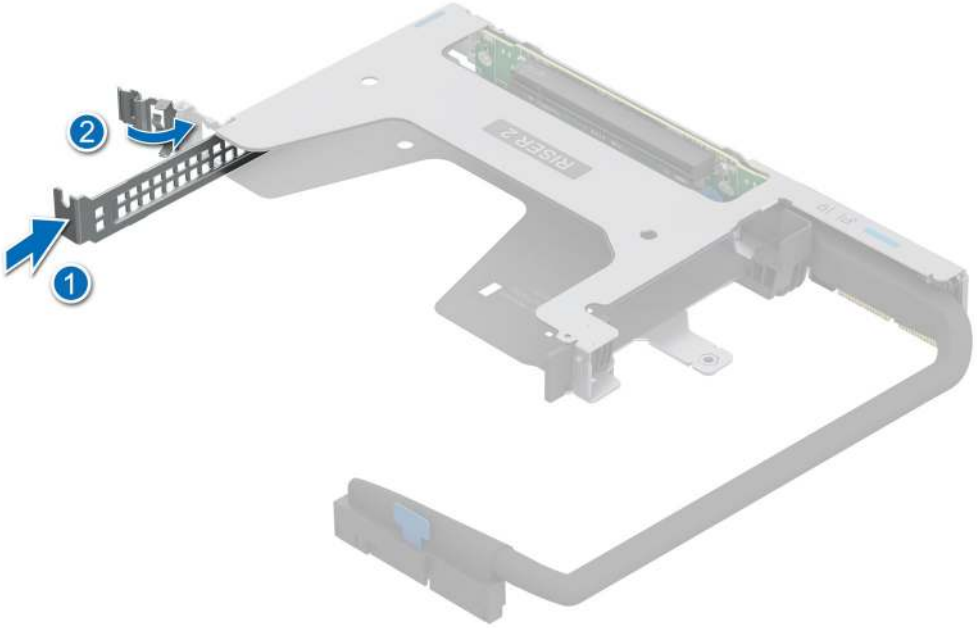

Figure 139. Installing the PCIe blank for riser 2q

Figure 140. Installing the PCIe blank for riser 4b

Figure 141. Installing the PCIe blank for riser 4a

Figure 142. Installing the PCIe blank for riser 2v or 2k

NOTE: The numbers on the image do not depict the exact steps. The numbers are for representation of sequence.

Next steps

If applicable, install an expansion card into the expansion card riser.

Installing an expansion card into the expansion card riser

Prerequisites

1. Follow the safety guidelines listed in the Safety instructions.
2. Follow the procedure listed in Before working inside your system.

3. Remove the system cover
4. remove the rear expansion card riser.
5. If installing a new expansion card, unpack it and prepare the card for installation.

NOTE: For instructions, see the documentation accompanying the card.

CAUTION: Do not install GPUs, network cards, or other PCIe devices on your system that are not validated and tested by Dell. Damage caused by unauthorized and invalidated hardware installation will null and void the system warranty.

Steps

1. Pull and lift up the expansion card retention latch lock to open.
2. If installed, remove the PCIe blank from the risers.

NOTE: Store the PCIe blank for future use. PCIe blank must be installed in empty expansion card slots to maintain Federal Communications Commission (FCC) certification of the system. The blank also keep dust and dirt out of the system and aid in proper cooling and airflow inside the system.

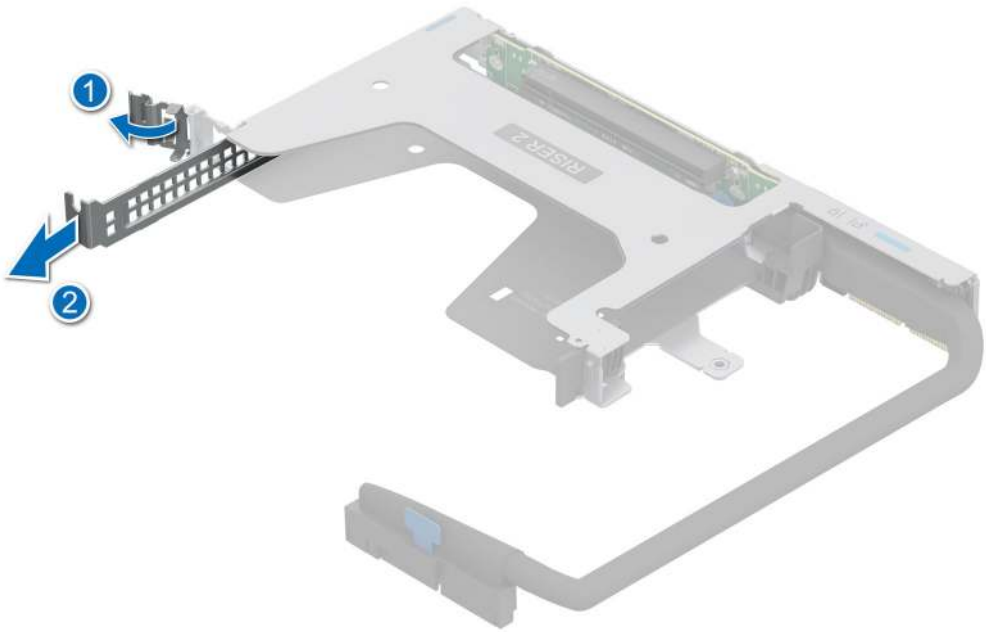

Figure 143. Removing the PCIe blank for the riser 2q

Figure 144. Removing the PCIe blank for the riser 4b

Open the retention latch and remove the PCIe blank..

Figure 145. Removing the PCIe blank for the riser 4a

Open the retention latch and remove the PCIe blank..

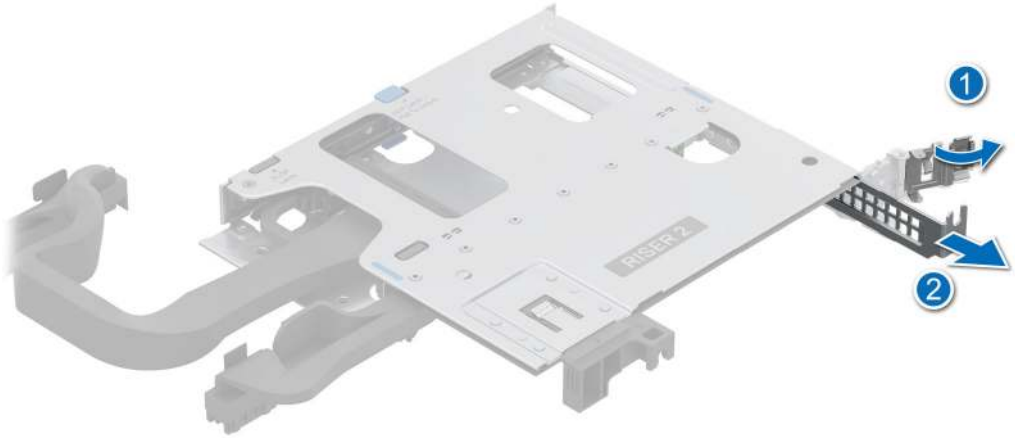

Figure 146. Removing the PCIe blank for the riser 2v or 2k

Open the retention latch and remove the PCIe blank..

3. For riser 2q:
   a. Hold the card by the edges, and align the card edge connector with the expansion card connector on the riser.
   b. Insert the card edge connector firmly into the expansion card connector until the card is fully seated.
   c. Align and slide the card holder guides into the slots on the riser until seated.
   d. Close the expansion card retention latch on both ends of the riser.

Figure 147. Installing an expansion card into the riser 2q

   e. If installing a Low Profile card, align the LP GPU blank on the Riser 2b wall and ensure the blank hook is securely fixed in place.

NOTE: The numbers on the image do not depict the exact steps. The numbers are for representation of sequence.

Figure 148. Installing GPU blank on the rear expansion card riser 2q

4. For riser 4b:
   a. Hold the card by the edges, and align the card edge connector with the expansion card connector on the riser.
   b. Insert the card edge connector firmly into the expansion card connector until the card is fully seated.
   c. Align and slide the card holder guides into the slots on the riser until seated.
   d. Close the expansion card retention latch on both ends of the riser.

   NOTE: The numbers on the image do not depict the exact steps. The numbers are for representation of sequence.

Figure 149. Installing an expansion card into the riser 4b

5. For riser 4a:

a. Hold the card by the edges, and align the card edge connector with the expansion card connector on the riser.
b. Insert the card edge connector firmly into the expansion card connector until the card is fully seated.
c. Align and slide the card holder guides into the slots on the riser until seated.
d. Close the expansion card retention latch on both ends of the riser.

NOTE: The numbers on the image do not depict the exact steps. The numbers are for representation of sequence.

Figure 150. Installing an expansion card into the riser 4a

6. For riser 2v or 2k
   a. To install the expansion card, hold the card by the edges, and align the card edge connector with the expansion card connector on the riser. Insert the card edge connector firmly into the expansion card connector until the card is fully seated. Align and slide the card holder guides into the slots on the riser until seated. Close the expansion card retention latchs on the riser.
   b. To install the OCP, align and insert the OCP NIC card into the the system. Push until the OCP NIC card is connected to the connector on the riser. Press the blue release to lock the OCP into the riser.

NOTE: The numbers on the image do not depict the exact steps. The numbers are for representation of sequence.

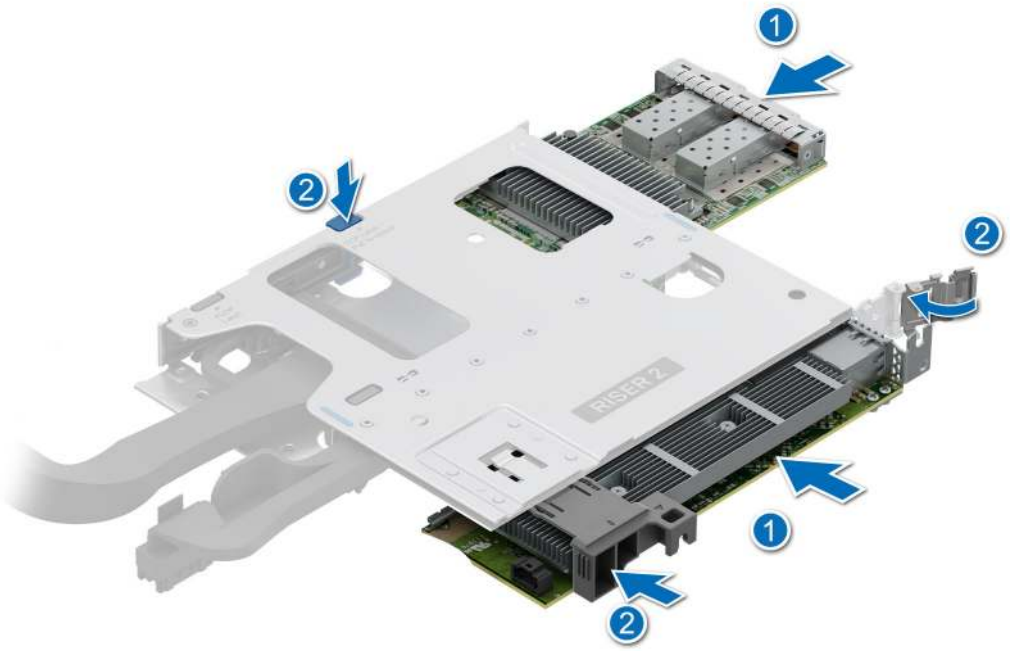

Figure 151. Installing an expansion card into the riser 2v or 2k

Next steps

1. If applicable, connect the cables to the expansion card.
2. install the rear expansion card riser.
3. Replace the system cover.
4. Follow the procedure listed in the After working inside your system.
5. Install any device drivers required for the card as described in the documentation for the card.

Removing the rear expansion card riser blank

Prerequisites

1. Follow the safety guidelines listed in the Safety instructions.
2. Follow the procedure listed in the Before working inside your system.
3. Remove the system cover.

Steps

Using Phillips 2 screwdriver, loosen the 3 thumb screws securing the riser blank, then lift it up and away from the HPM board.

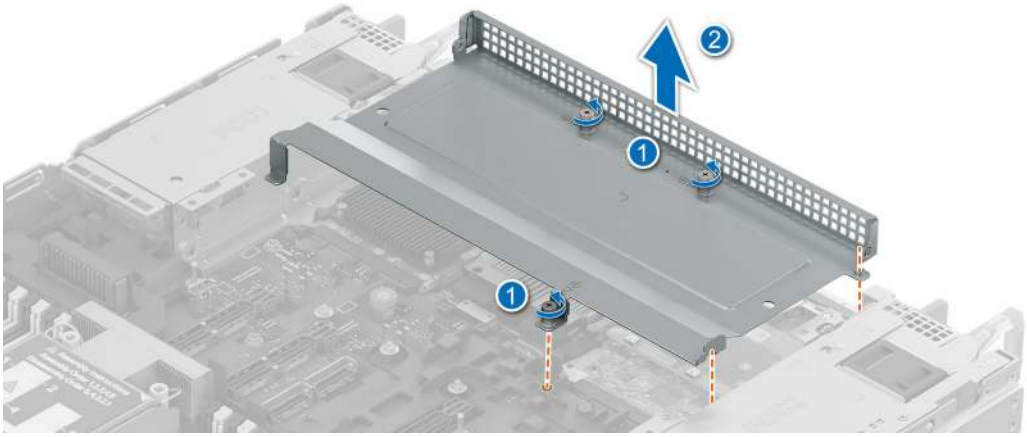

Figure 152. Removing the rear expansion card riser blank

Next steps

1. Replace the rear expansion card risers
2. Replace the system cover.

.

Installing the rear expansion card riser blank

Prerequisites

1. Follow the safety guidelines listed in the Safety instructions.
2. Follow the procedure listed in the Before working inside your system.
3. Remove the system cover.

Steps

Align the riser blank with the blank alignment guide pin and T-pin, then use a Phillips 2 screwdriver to fasten the 3 thumb screws.

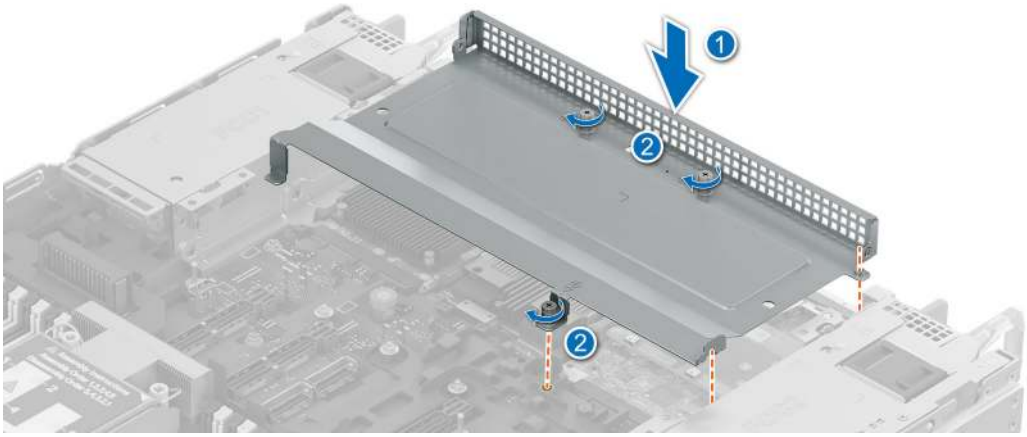

Figure 153. Installing the rear expansion card riser blank

Next steps

1. Replace the system cover.

2. Follow the procedure listed in After working inside your system.

M.2 SSD module

Removing the M.2 NVMe SSD module from the M.2 Interposer board

Prerequisites

1. Follow the safety guidelines listed in the Safety instructions.
2. Follow the procedure listed in Before working inside your system.
3. Remove the M.2 Interposer board .

Steps

1. Using the Phillips 1 screwdriver, loosen the captive screws securing the top cover of the M.2 Interposer board. Tilt the top cover from the side and lift the top cover out of the M.2 Interposer board.

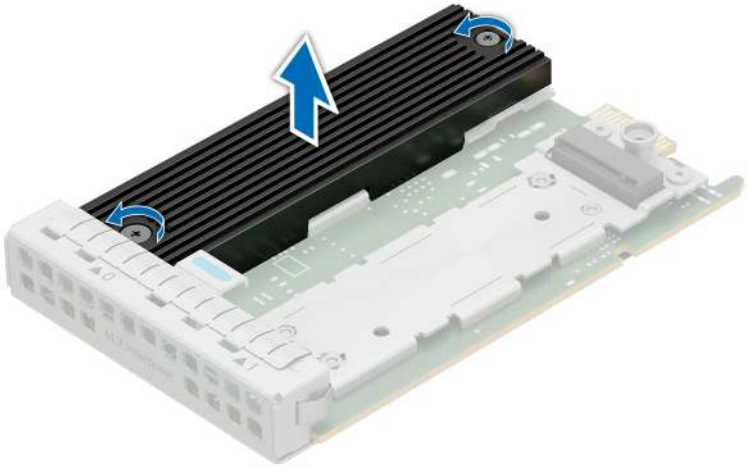

Figure 154. Loosen the top cover captive screws

2. Lift the M.2 NVMe SSD module to disconnect from the M.2 Interposer board.

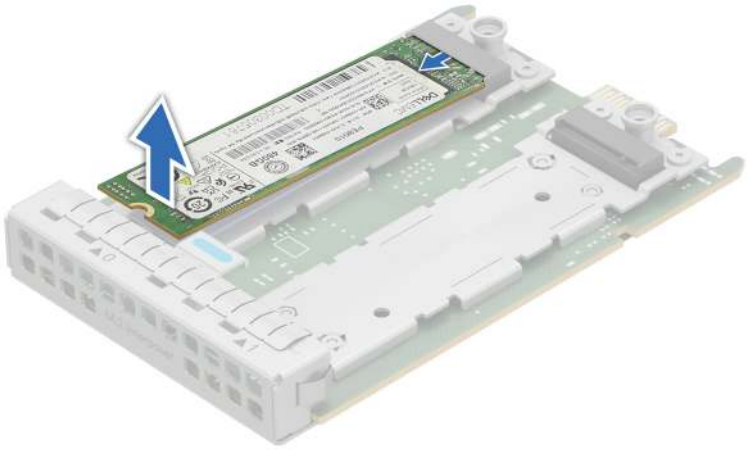

Figure 155. Removing the M.2 NVMe SSD from the board

Next steps

1. Replace the M.2 NVMe SSD module in the M.2 Interposer board.

Installing the M.2 NVMe SSD module in the M.2 Interposer board

Prerequisites

1. Follow the safety guidelines listed in the Safety instructions.
2. Follow the procedure listed in Before working inside your system.
3. Remove the M.2 Interposer board .

Steps

1. Remove the thermal pads on the top cover and bottom cover of the M.2 Interposer board, when replacing the M.2 NVMe SSD module in the M.2 Interposer board.

   NOTE: The thermal pad that has been removed cannot be reused for installing the M.2 NVMe SSD module. You must use new thermal pads for the installation.

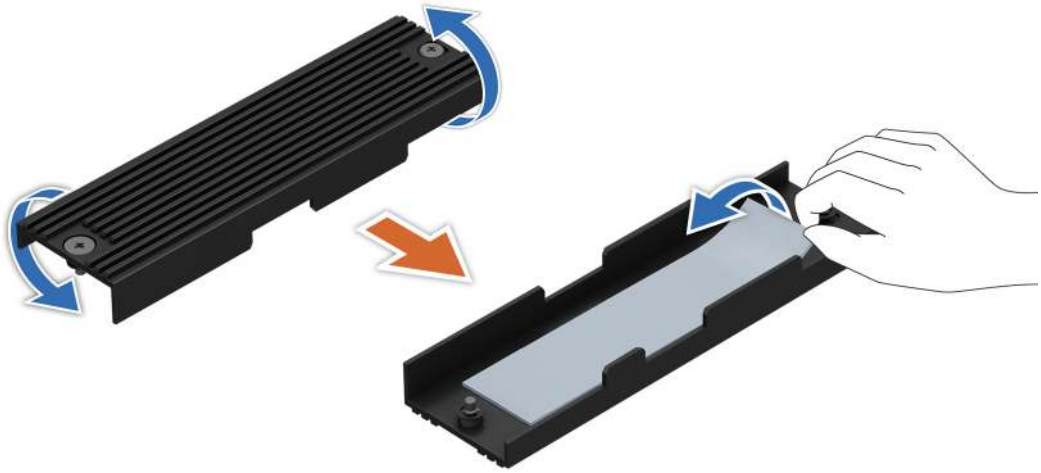

Figure 156. Removing the thermal pad from the top cover

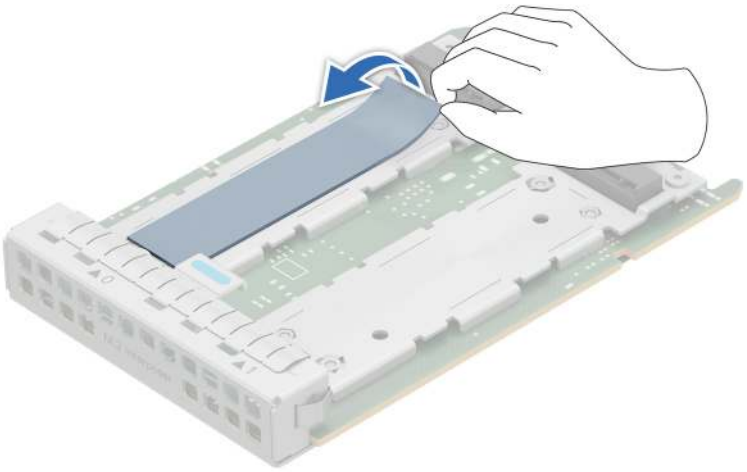

Figure 157. Removing the thermal pad from the board from the slot0

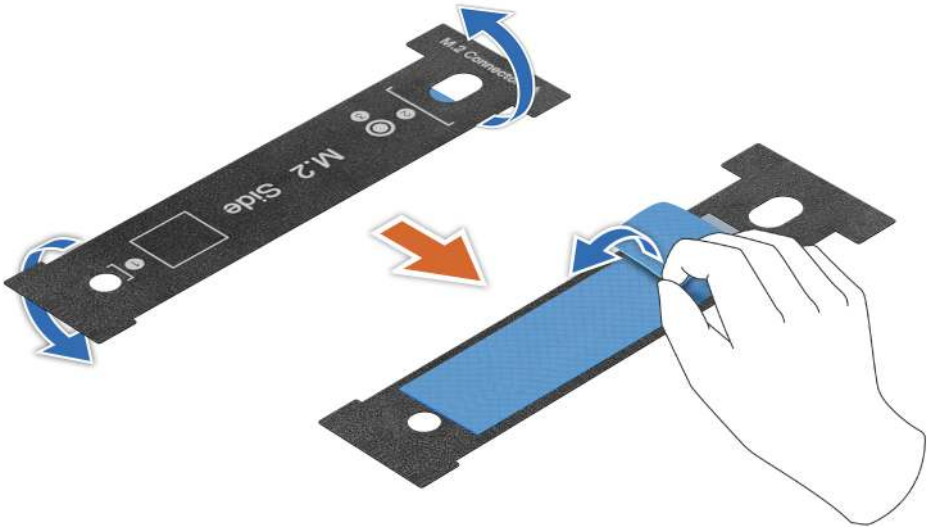

Figure 158. Removing the blue film from the new thermal pad

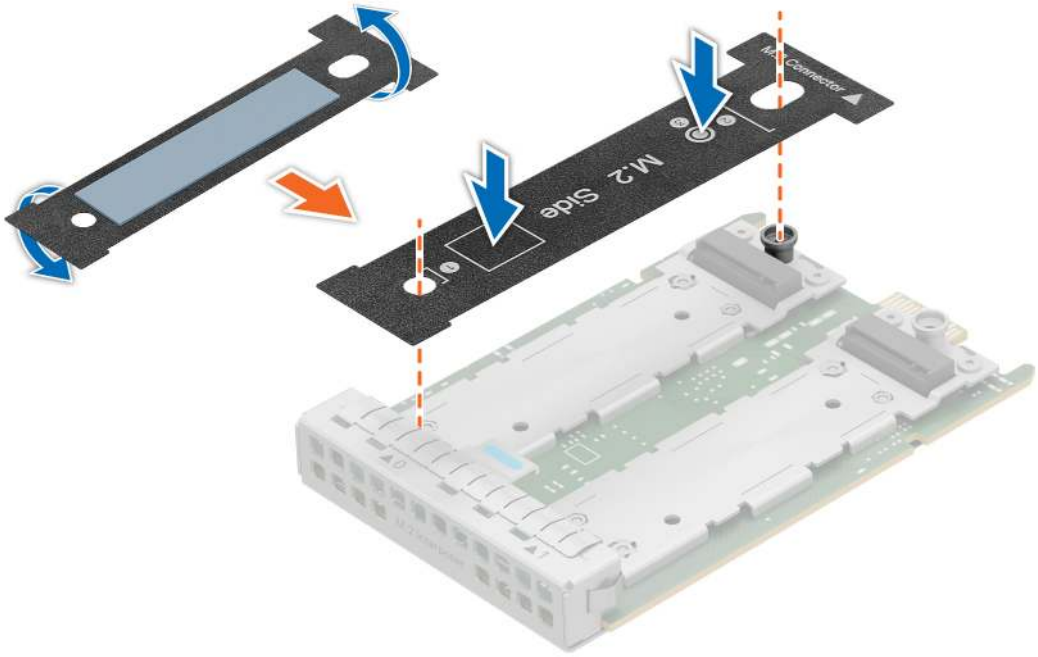

Figure 159. Fliping and installing the new thermal pad on the board

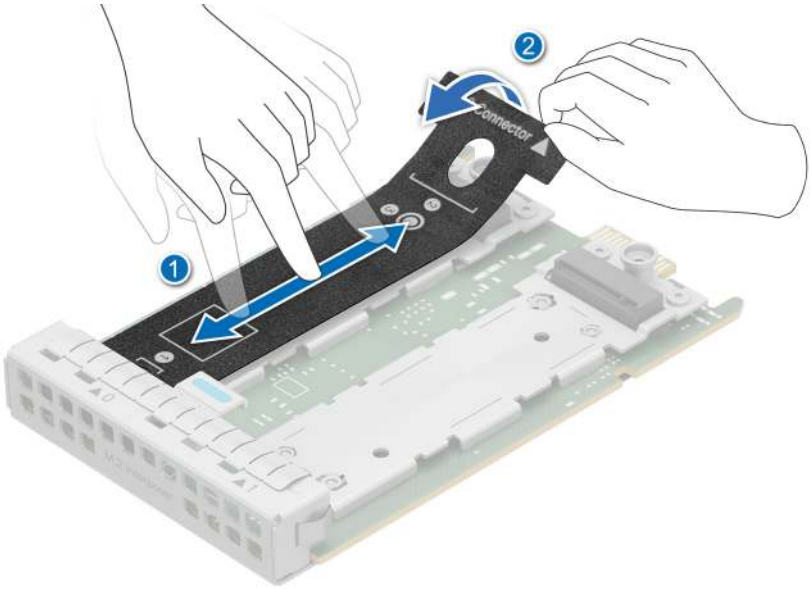

Figure 160. Pasting the new thermal pad on the board and removing the black mylar

2. Align the M.2 NVMe SSD module at an angle with the M.2 Interposer board.
3. Insert the M.2 NVMe SSD module until it is firmly seated in the M.2 Interposer board.

NOTE: Press the M.2 NVMe SSD module until it adheres to the thermal pad.

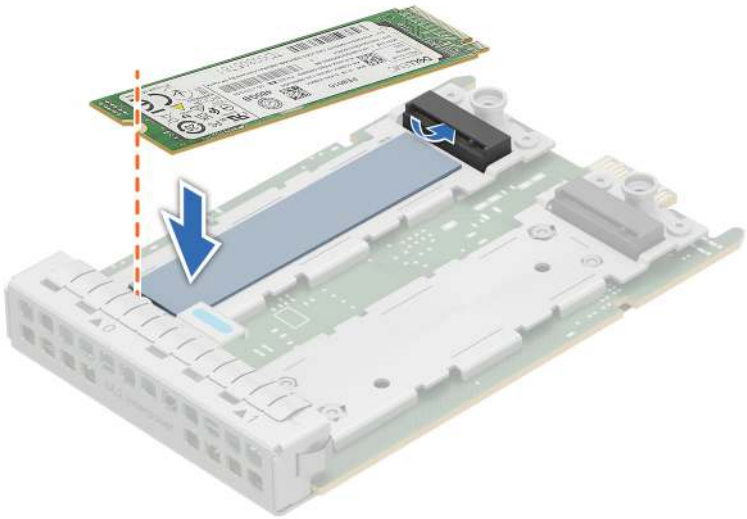

Figure 161. Installing the new M.2 NVMe SSD module

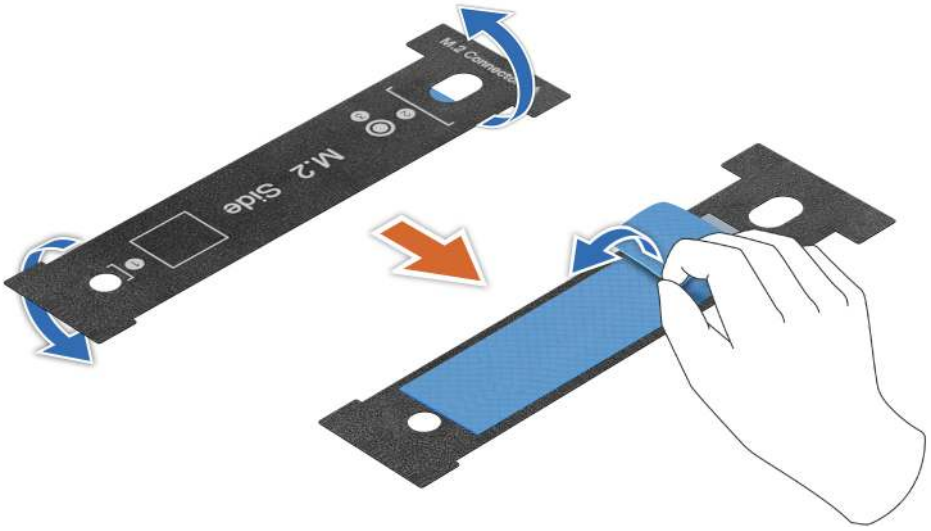

Figure 162. Removing the blue film from another thermal pad

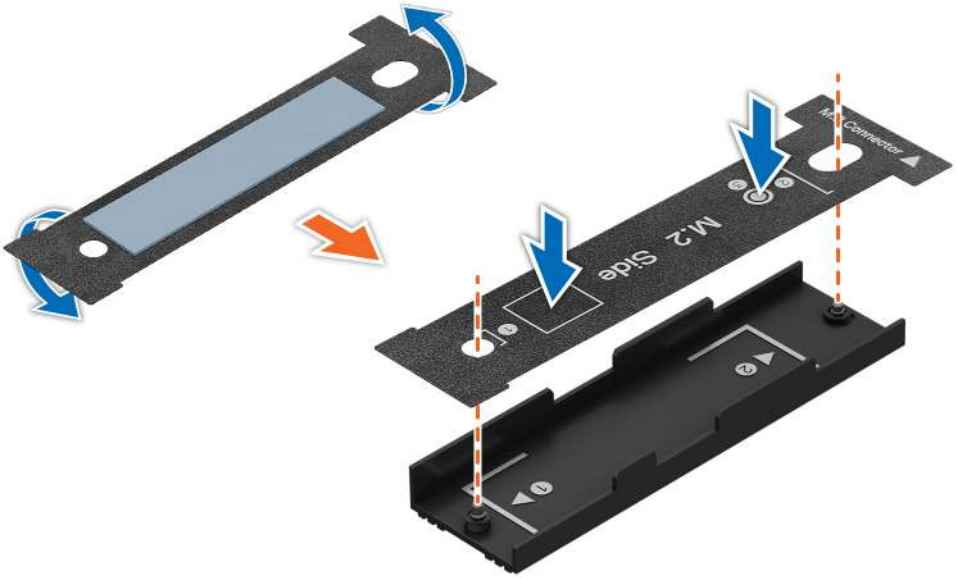

Figure 163. Installing the new thermal pad inside the top cover

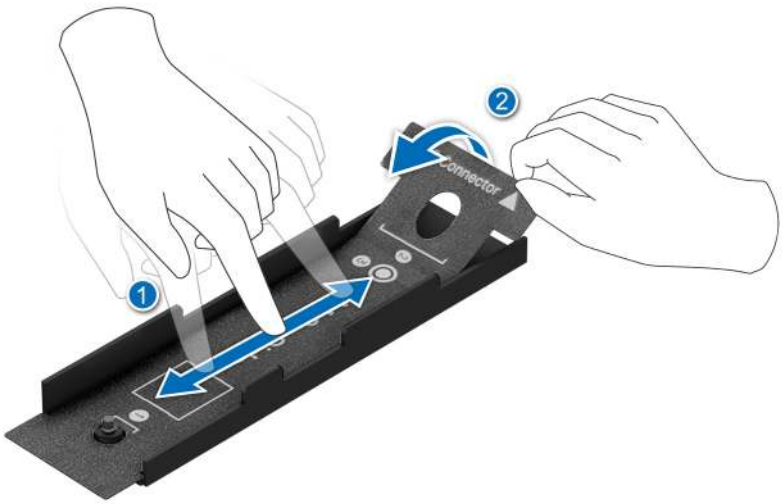

Figure 164. Pasting the new thermal pad inside the top cover and removing the black mylar from the thermal pad

4. Flip the top cover and install it on the M.2 Interposer board. Using the Phillips 1 screwdriver, tighten the captive screws on the M.2 Interposer board top cover.

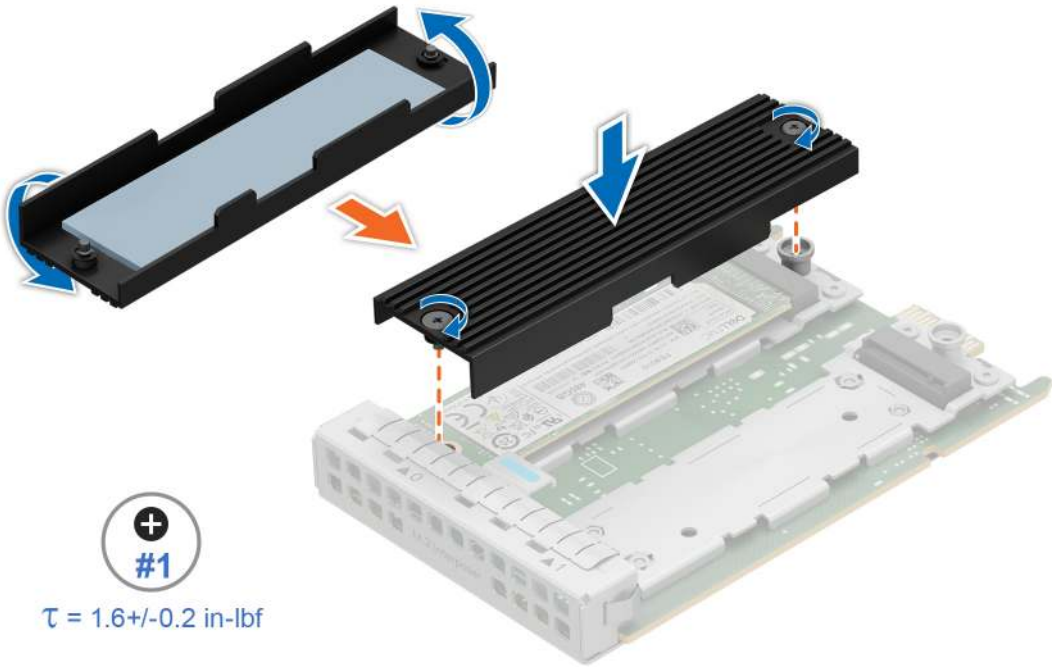

Figure 165. Installing the top cover

Removing the M.2 NVMe SSD module

Prerequisites

1. Follow the safety guidelines listed in the Safety instructions.
2. Follow the procedure listed in Before working inside your system.

Steps

1. Pull and lift the BOSS-N1 card carrier retention latch lock to open.

2. Slide the BOSS-N1 card carrier out.

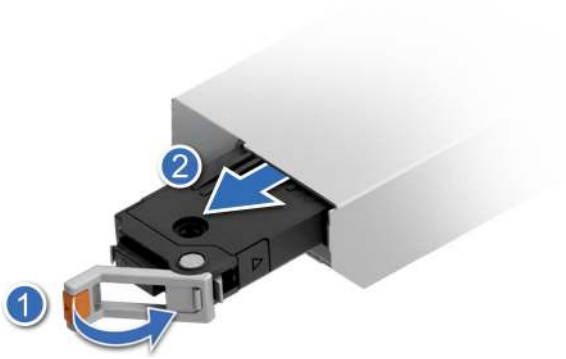

Figure 166. Removing the BOSS-N1 card carrier

3. Using the Phillips 1 screwdriver, loosen the captive screws securing the top cover of the BOSS-N1 card carrier.

   NOTE: Follow the sequence to loosen the captive screws. First, loosen the screw at the connector end, and then the screw at the front handle end.

Figure 167. Loosen the top cover captive screws

4. Tilt the top cover from the side and lift the top cover out of the BOSS-N1 card carrier.

Figure 168. Removing the top cover

5. Lift the M.2 NVMe SSD module to disconnect from the BOSS-N1 card carrier connector.

Figure 169. Removing the M.2 NVMe SSD module

NOTE: For information about Thermal pad and BOSS-N1 card carrier replacement, go to PowerEdge Manuals > **Rack Servers** > PowerEdge R470 > **Select This Product** > **Documentation** > **Manuals and Documents** > **BOSS-N1 DC-MHS M.2 NVMe SSD Card Installation and Replacement Tech Sheet**.

Next steps

1. Replace the M.2 NVMe SSD module.

Installing the M.2 NVMe SSD module

Prerequisites

1. Follow the safety guidelines listed in the Safety instructions.
2. Follow the procedure listed in Before working inside your system.
3. Replace the thermal pads on the top and bottom cover of the BOSS-N1 card carrier, when replacing the M.2 NVMe SSD module.

NOTE: For information about Thermal pad and BOSS-N1 card carrier replacement, go to PowerEdge Manuals > **Rack Servers** > PowerEdge R470 > **Select This Product** > **Documentation** > **Manuals and Documents** > **BOSS-N1 DC-MHS M.2 NVMe SSD Card Installation and Replacement Tech Sheet**.

Steps

1. Align the M.2 NVMe SSD module at an angle with the BOSS-N1 card carrier connector.
2. Insert the M.2 NVMe SSD module until it is firmly seated in the BOSS-N1 card carrier connector.

NOTE: Press the M.2 NVMe SSD card until it adheres to the thermal pad.

Figure 170. Installing the M.2 NVMe SSD module

3. Align at an angle, place the top cover hook into the slot on the bottom cover of the BOSS-N1 card carrier.
4. Press the opposite side of the top cover until firmly seated.

Figure 171. Installing the top cover

5. Using the Phillips 1 screwdriver, tighten the captive screws on the BOSS-N1 card carrier top cover.

   NOTE: Follow the sequence to tighten the captive screws. First, tighten the screw available at the front handle end, and then the screw at the connector end.

Figure 172. Tighten the top cover captive screws

6. Slide the BOSS-N1 card carrier into the BOSS-N1 module slot.
7. Close the BOSS-N1 card carrier release latch to lock the carrier in place.

Figure 173. Installing the BOSS-N1 card carrier

Optional M.2 Interposer board

This is a service technician replaceable part only.

Removing the M.2 Interposer board

Prerequisites

1. Follow the safety guidelines listed in the Safety instructions.
2. Follow the procedure listed in the Before working inside your system.
3. Remove the rear expansion card riser or remove the rear expansion card riser blanks.

Steps

1. Open the blue latch to disengage the M.2 Interposer board.
2. Press and hold the push point on the card to push the M.2 Interposer board towards the rear of the system, disconnecting it from the connector on the HPM board.
3. Slide the M.2 Interposer board out of the slot on the system.

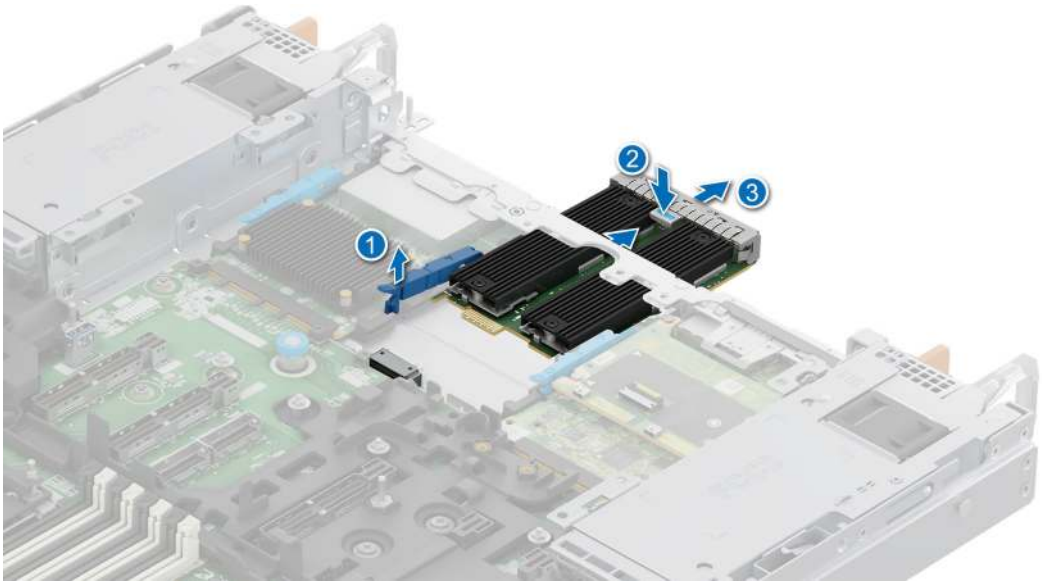

Figure 174. Removing the M.2 Interposer board

4. If you do not plan to replace the M.2 Interposer board, install a filler bracket.

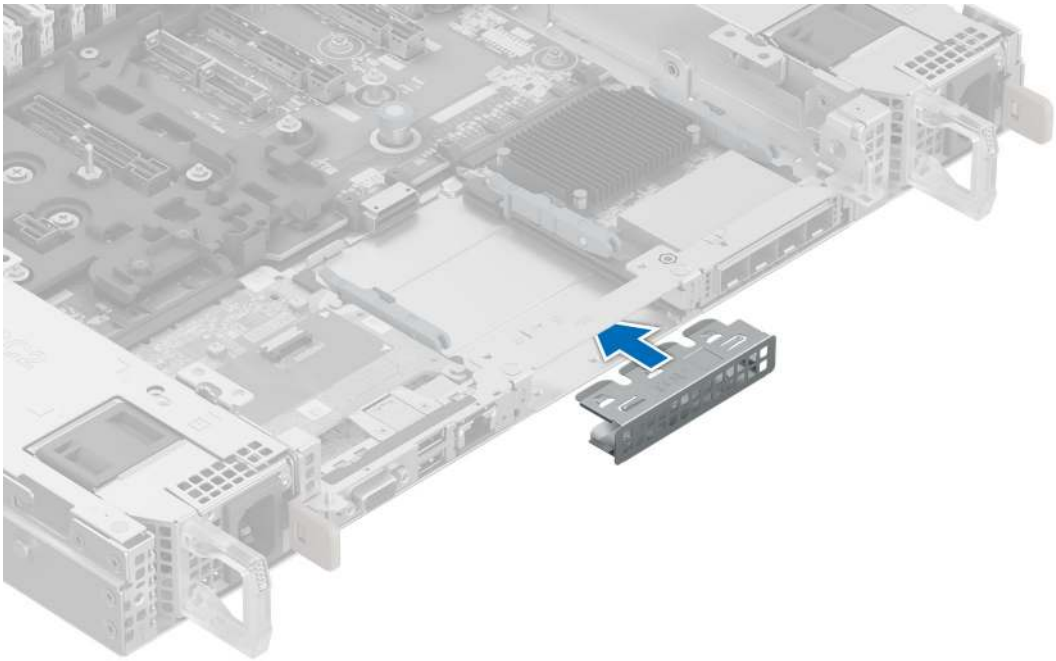

Figure 175. Installation of filler bracket

Next steps

- Remove the M.2 NVMe SSD module from the M.2 Interposer board.

  NOTE: If a new M.2 Interposer board is being installed, the M.2 NVMe SSD modules must be removed from the existing M.2 Interposer board and added to the new board.

- Replace the the M.2 Interposer board

.

Installing the M.2 Interposer board

Prerequisites

1. Follow the safety guidelines listed in the Safety instructions.
2. Follow the procedure listed in the Before working inside your system.
3. Remove the rear expansion card riser or remove the rear expansion card riser blanks.

NOTE: If a new M.2 Interposer board is being installed, the M.2 NVMe SSD modules must be removed from the existing M.2 Interposer board and added to the new board.

Steps

1. If installed, remove the filler bracket.

   NOTE: Store the filler bracket for future use. Filler brackets must be installed in empty expansion card slots to maintain Federal Communications Commission (FCC) certification of the system. The brackets also keep dust and dirt out of the system and aid in proper cooling and airflow inside the system.

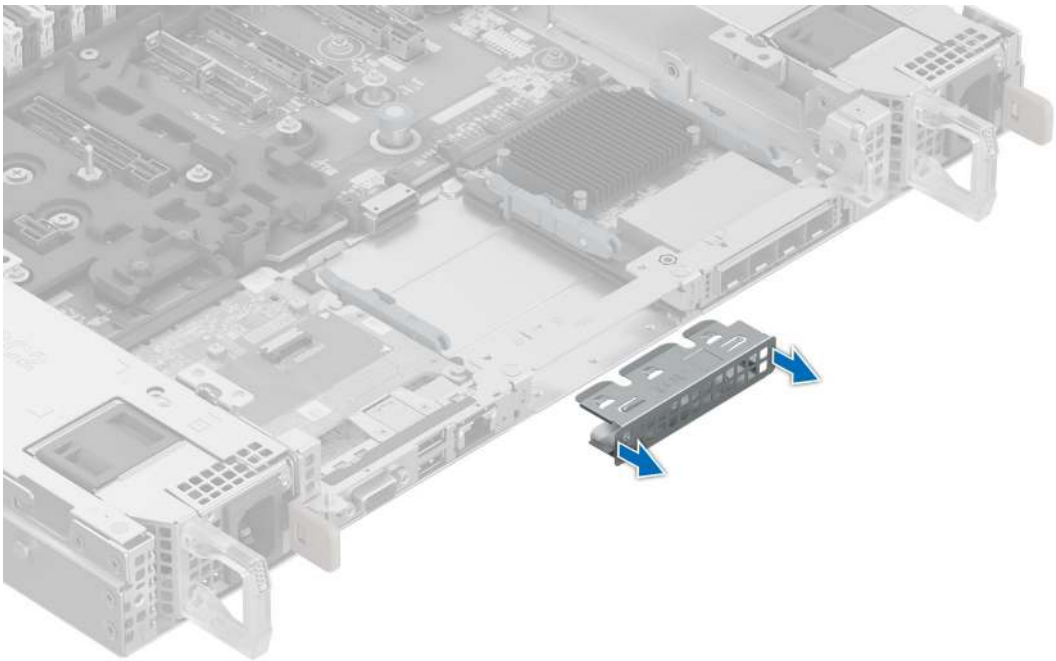

Figure 176. Removal of filler bracket

2. Remove the thermal pads from the top cover and from the bottom of the M.2 Interposer board, when replacing the M.2 Interposer board.

   CAUTION: If you are not using the slot 1, peel off the protective film and the thermal pad on the slot 1.

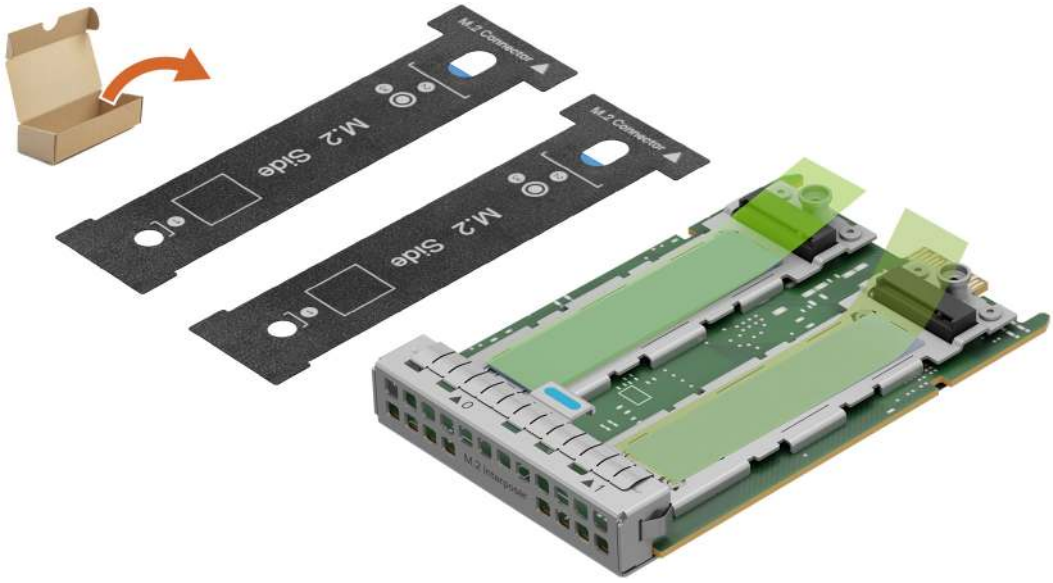

Figure 177. Kit contents

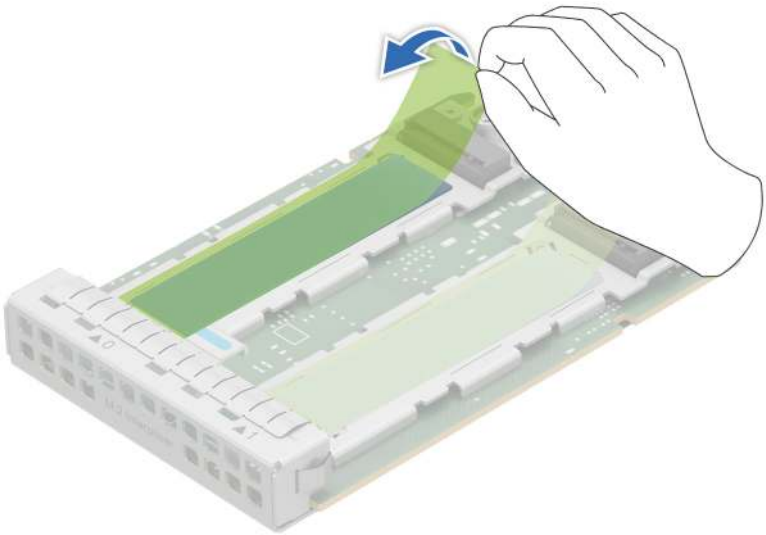

Figure 178. Removing the protective film from the thermal pad

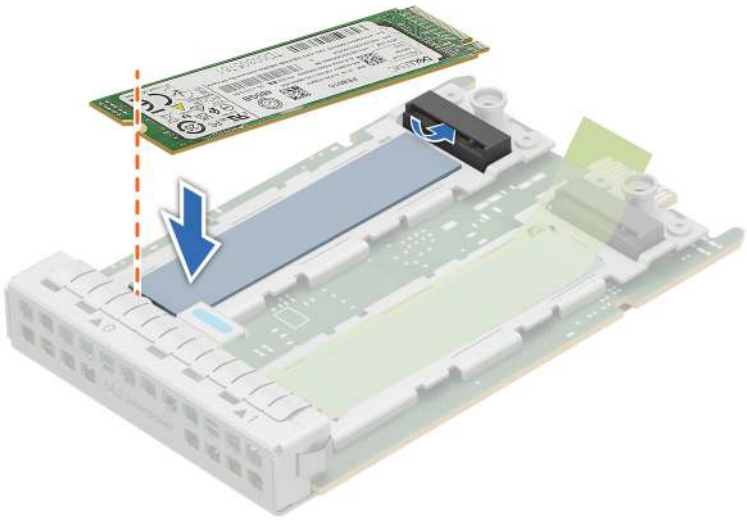

Figure 179. Installing the SSD

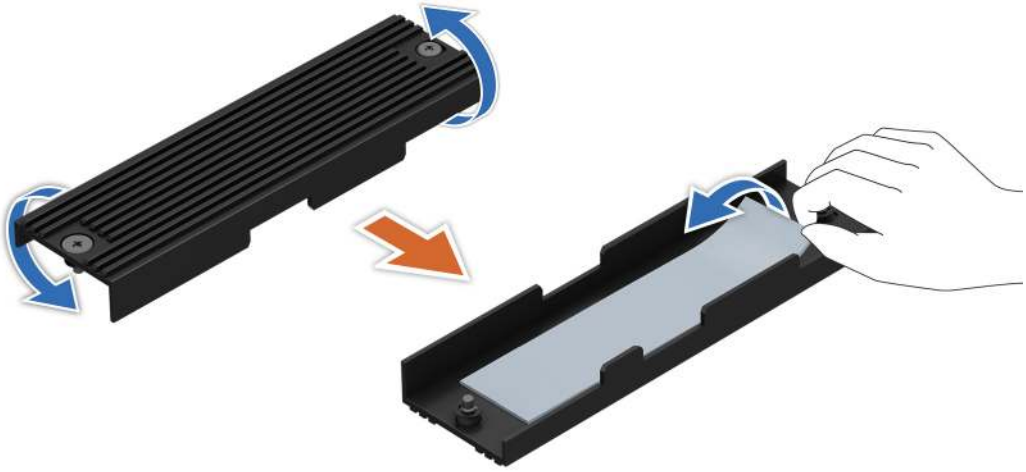

Figure 180. Fliping the top cover and removing the thermal pad from the top cover

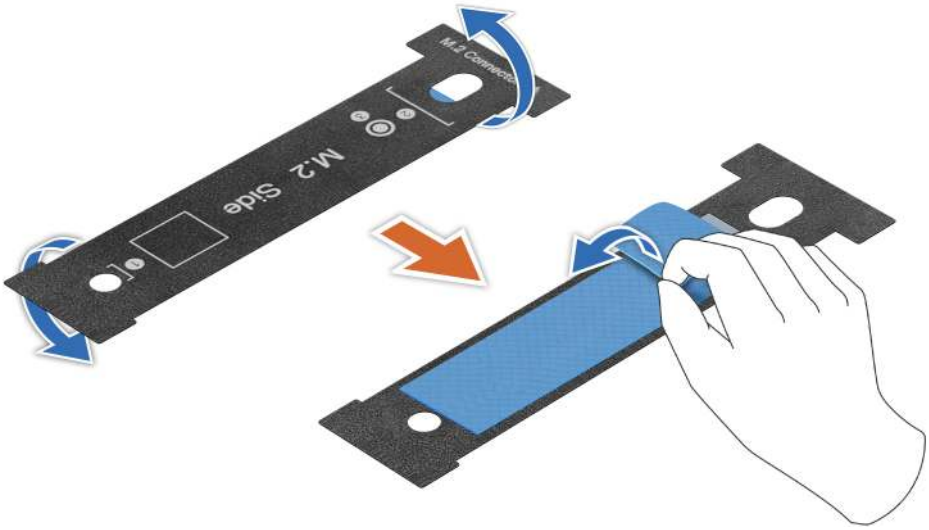

Figure 181. Removing the blue film from the new thermal pad

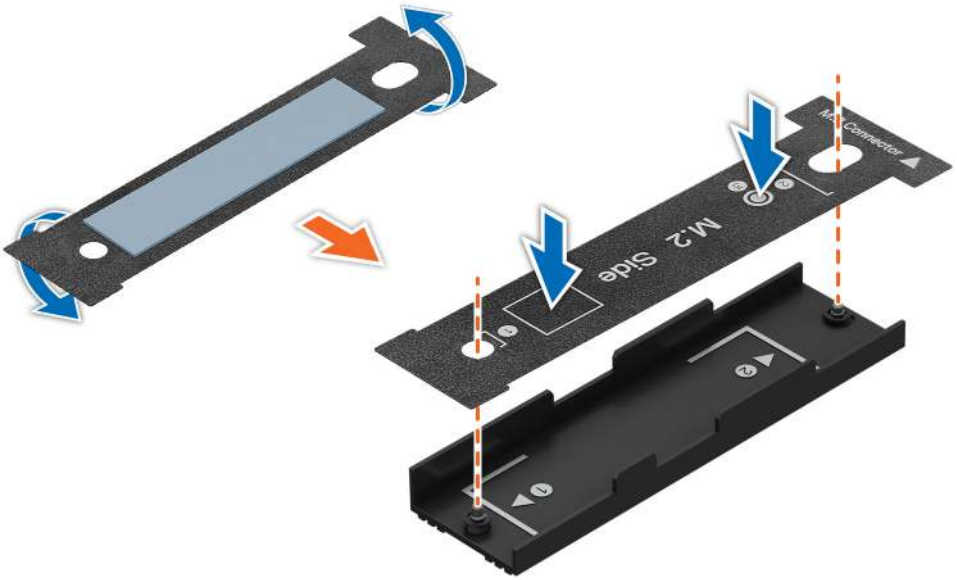

Figure 182. Installing the new thermal pad inside the top cover

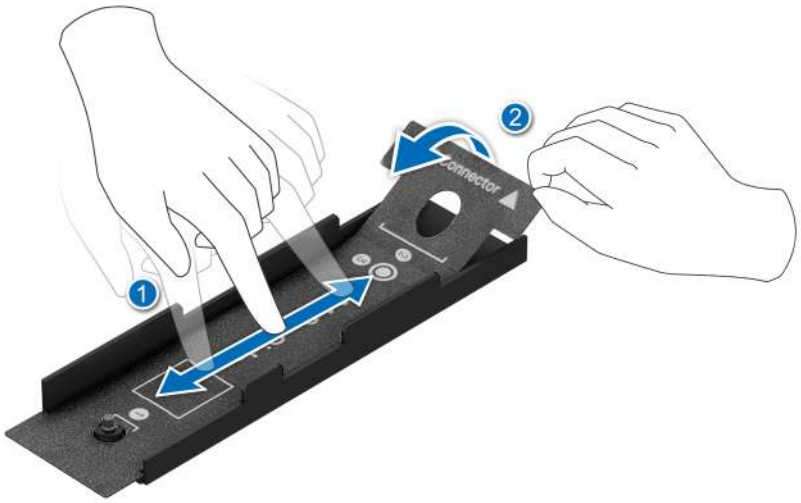

Figure 183. Pasting the new thermal pad inside the top cover and removing the black mylar

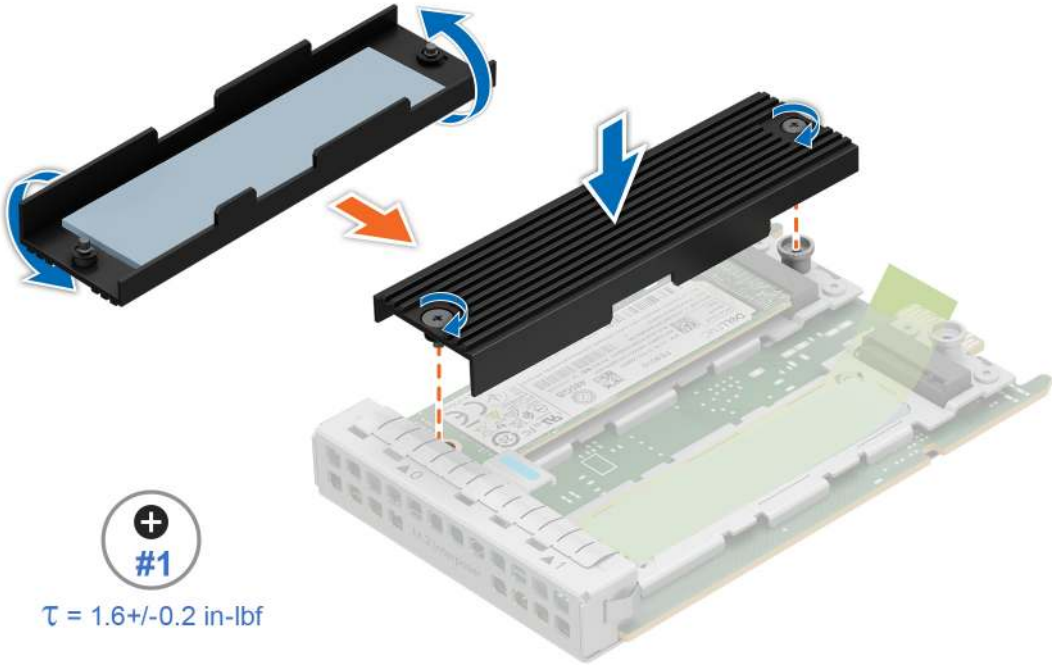

Figure 184. Installing the top cover on the M.2 Interposer board

3. Open the blue latch on the system board.
4. Slide the M.2 Interposer board into the slot in the system.
5. Push until the M.2 Interposer board is connected to the connector on the system board.
6. Close the blue latch to lock the M.2 Interposer board to the system.

NOTE: The numbers on the image do not depict the exact steps. The numbers are for representation of sequence.

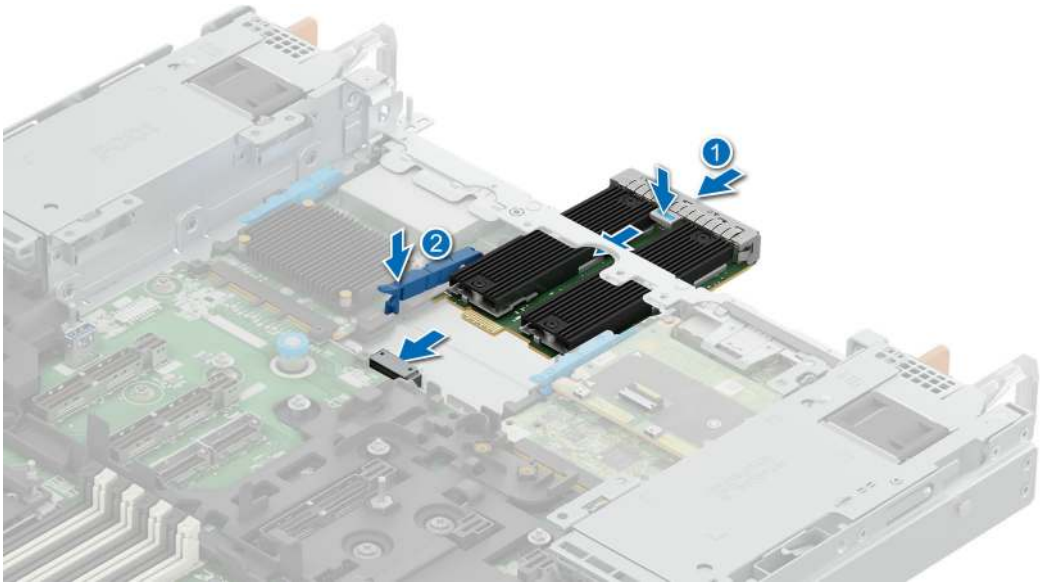

Figure 185. Installing the M.2 Interposer board

Next steps

1. Install the rear expansion card riser or install the rear expansion card riser blanks.
2. Follow the procedure listed in the After working inside your system.

Optional BOSS-N1 DC-MHS module

This is a service technician replaceable part only.

Removing the BOSS-N1 DC-MHS card carrier blank

Prerequisites

1. Follow the safety guidelines listed in the Safety instructions.

Steps

Press and pull the BOSS-N1 DC-MHS card carrier blank out from the BOSS-N1 DC-MHS controller.

Figure 186. Removing the BOSS-N1 DC-MHS card carrier blank

Next steps

1. Replace the BOSS-N1 DC-MHS card carrier blank or install BOSS-N1 DC-MHS card carrier.

Installing the BOSS-N1 DC-MHS card carrier blank

Prerequisites

1. Follow the safety guidelines listed in the Safety instructions.

Steps

Align the blank with the BOSS-N1 DC-MHS controller bay and push it into the bay until it clicks into place.

Figure 187. Installing the BOSS-N1 DC-MHS card carrier blank

Removing the front BOSS-N1 DC-MHS module

Prerequisites

1. Follow the safety guidelines listed in the Safety instructions.
2. Follow the procedure listed in the Before working inside your system.
3. Remove the system cover.
4. Remove the drive backplane cover.
5. Disconnect the cables from the HPM board, observe the cable routing.

NOTE: See cable routing section for more information.

Steps

1. Press both ends of the cable holder and tilt the BOSS-N1 DC-MHS module cable holder. Disconnect the cable from the BOSS module.

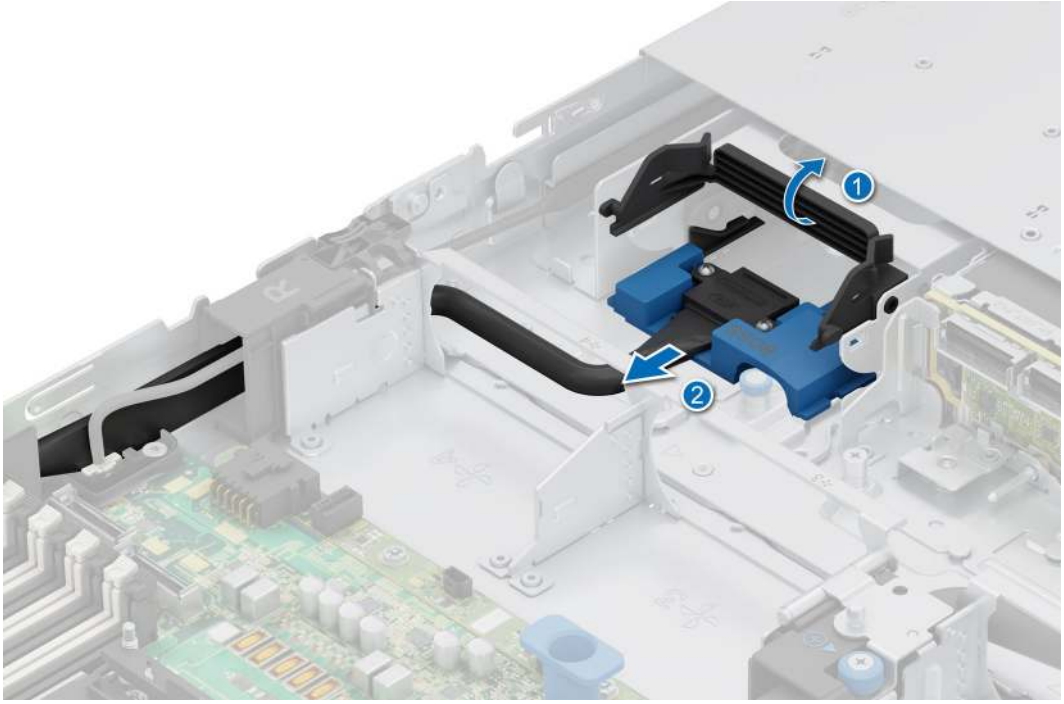

Figure 188. Removing an BOSS-N1 DC-MHS cable from the system

2. Lift the plunger and slide the BOSS-N1 DC-MHS module tray out of the system.

NOTE: The numbers on the image do not depict the exact steps. The numbers are for representation of sequence.

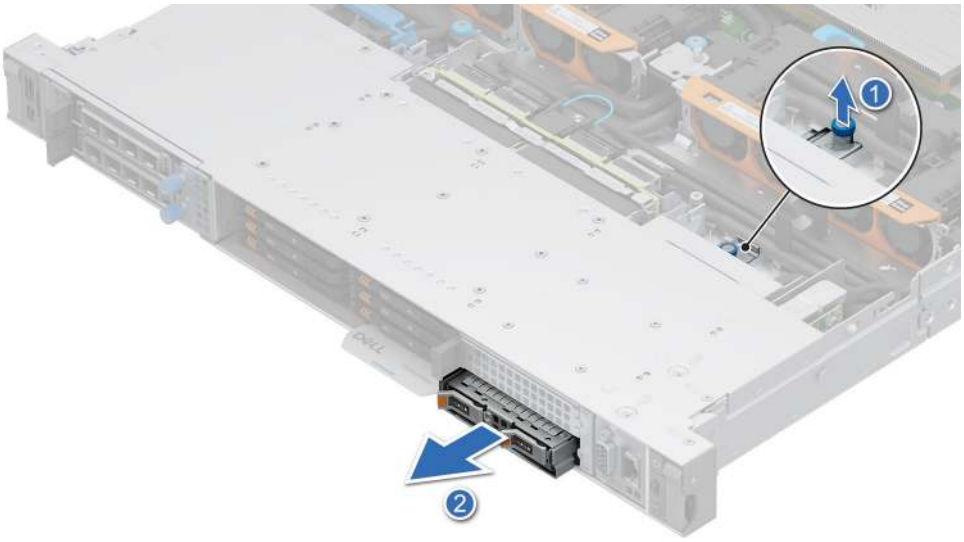

Figure 189. Removing an BOSS-N1 DC-MHS module tray from the system

3. Disconnect the BOSS cable connector from the connectors on the HPM board.
4. Push the clips outward and slide out the BOSS-N1 DC-MHS module from the tray.

   NOTE: For easier uninstallation, flip the entire module upside down to access both side clips.

Figure 190. Removing an BOSS-N1 DC-MHS module from tray

5. If the BOSS-N1 DC-MHS module is not going to be replaced, install a filler.

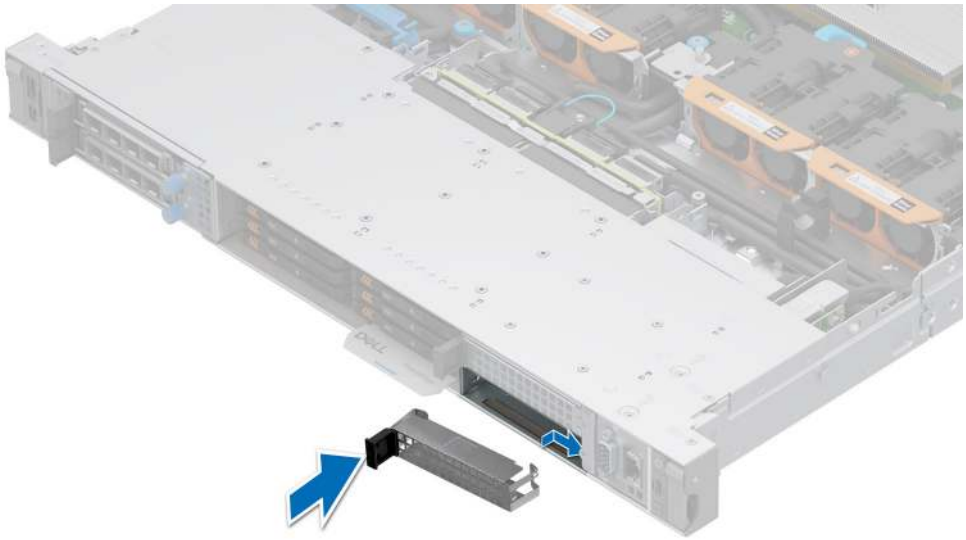

Figure 191. Installing an BOSS-N1 DC-MHS module filler bracket

Next steps

Replace the front BOSS-N1 DC-MHS module .

Installing the front BOSS-N1 DC-MHS module

Prerequisites

1. Follow the safety guidelines listed in the Safety instructions.
2. Follow the procedure listed in Before working inside your system.
3. Remove the system cover.
4. Remove the drive backplane cover.
5. Disconnect the cables from the HPM board, observe the cable routing.

NOTE: See cable routing section for more information.

CAUTION: Do not install GPUs, network cards, or other PCIe devices on your system that are not validated and tested by Dell. Damage caused by unauthorized and invalidated hardware installation will null and void the system warranty.

Steps

1. If installed, remove the filler bracket.

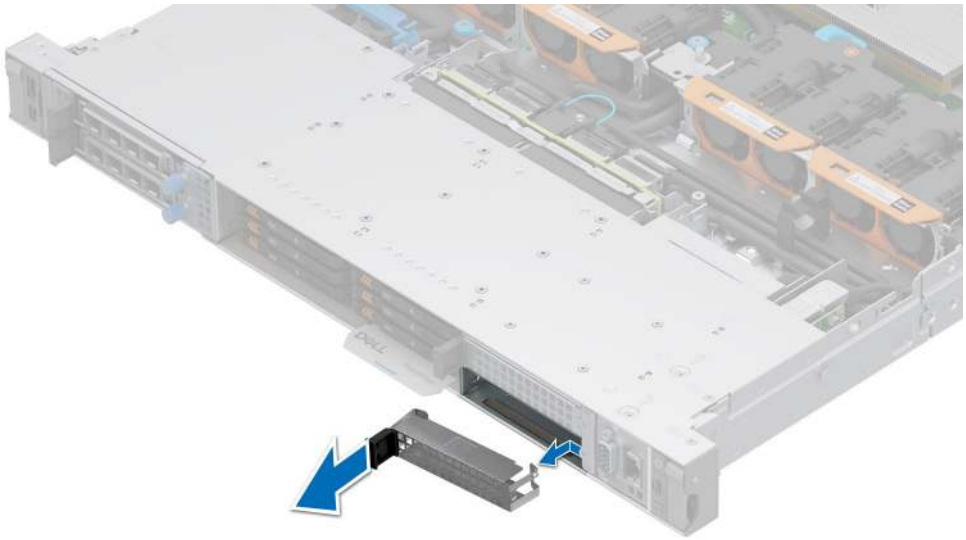

Figure 192. Removing an BOSS-N1 DC-MHS module filler bracket

2. Align and slide the BOSS-N1 DC-MHS module into the tray until it is firmly seated.

   NOTE: Make sure that the metallic tray is in unlock position before sliding the BOSS module into the tray.

Figure 193. Installing the BOSS-N1 DC-MHS module into the tray

3. Reconnect the BOSS module cable connector on the HPM board on one side and reconnect the another side cable to the connector on the BOSS module cable. Tilt the cable holder to secure the BOSS-N1 DC-MHS module cable into the system.

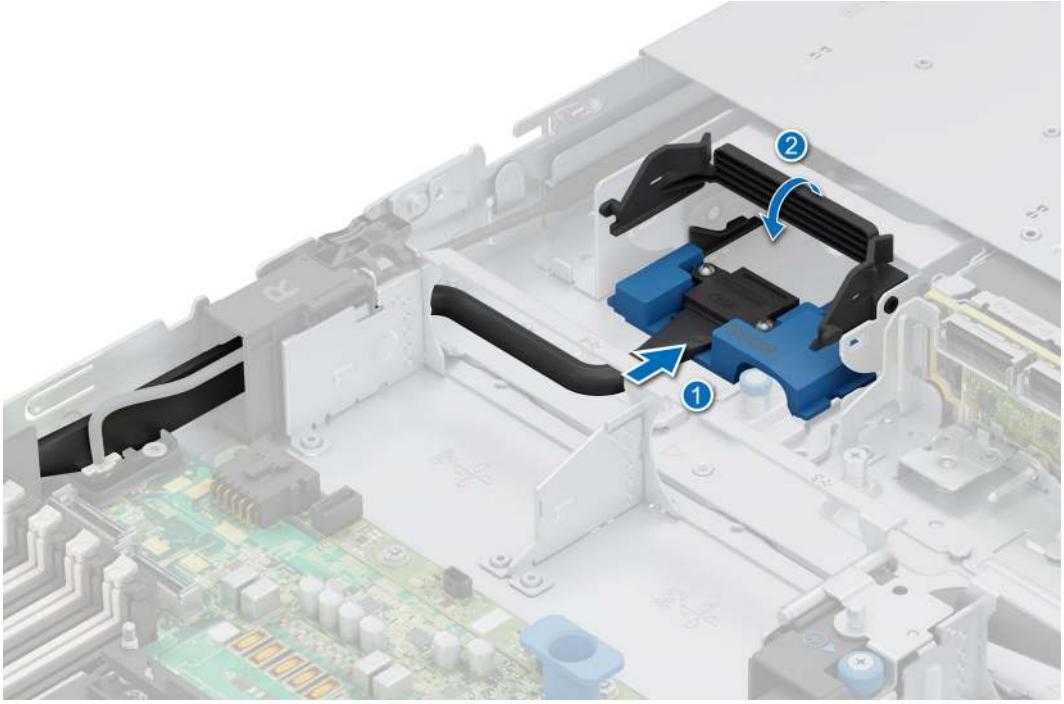

Figure 194. Reconnecting the cable connectors

4. Align and slide the BOSS-N1 DC-MHS module tray into the system until the plunger presses the stop point.
5. Pull up and slide the plunger to secure it in the hole on the system.

Figure 195. Installing the BOSS-N1 DC-MHS module tray into system

Next steps

1. Route and connect the cables, taking care not to damage them.

   NOTE: See cable routing section for more information.

2. Install the M.2 NVMe SSD module
3. Install the drive backplane cover.
4. Install the system cover.
5. Follow the procedure listed in the After working inside your system.

Removing the rear BOSS-N1 DC-MHS module

Prerequisites

1. Follow the safety guidelines listed in the Safety instructions.
2. Follow the procedure listed in Before working inside your system.
3. Remove the system cover
4. Remove the rear expansion card riser or Remove the rear expansion card riser blank
5. Remove the M.2 NVMe SSD module.

Steps

1. Open the blue latch to disengage the BOSS-N1 DC-MHS module.
2. Push the BOSS-N1 DC-MHS module towards the rear end of the system to disconnect from the connector on the HPM board.
3. Slide the BOSS-N1 DC-MHS module out of the slot on the system.

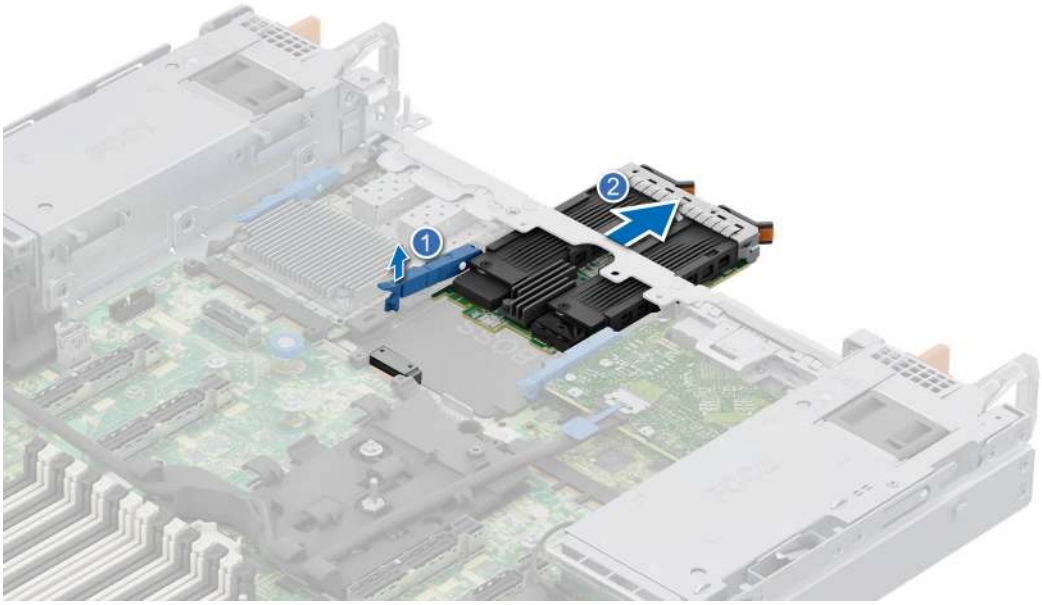

Figure 196. Removing the rear BOSS-N1 DC-MHS

4. If the BOSS-N1 DC-MHS module is not going to be replaced, install a filler bracket.

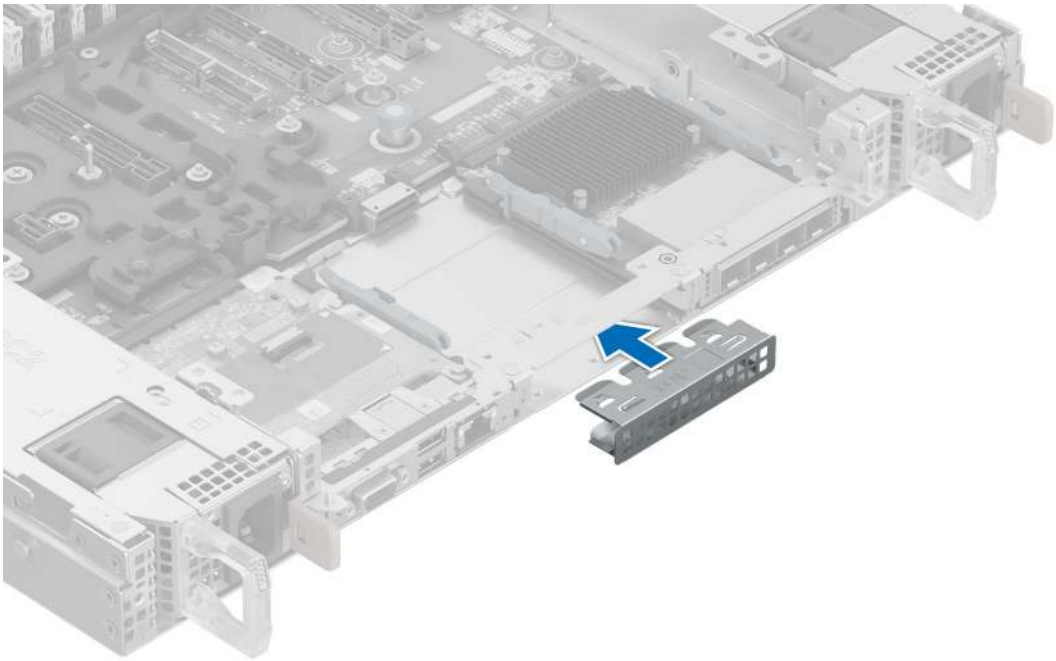

Figure 197. Installation of filler bracket

Next steps

1. Replace the rear BOSS-N1 DC-MHS module.

Installing the rear BOSS-N1 DC-MHS module

Prerequisites

1. Follow the safety guidelines listed in the Safety instructions.
2. Follow the procedure listed in the Before working inside your system.
3. Remove the system cover
4. Remove the rear expansion card riser or remove the rear expansion card riser blanks
5. Remove the M.2 NVMe SSD module.

Steps

1. If installed, remove the filler bracket.

   NOTE: Store the filler bracket for future use. Filler brackets must be installed in empty expansion card slots to maintain Federal Communications Commission (FCC) certification of the system. The brackets also keep dust and dirt out of the system and aid in proper cooling and airflow inside the system.

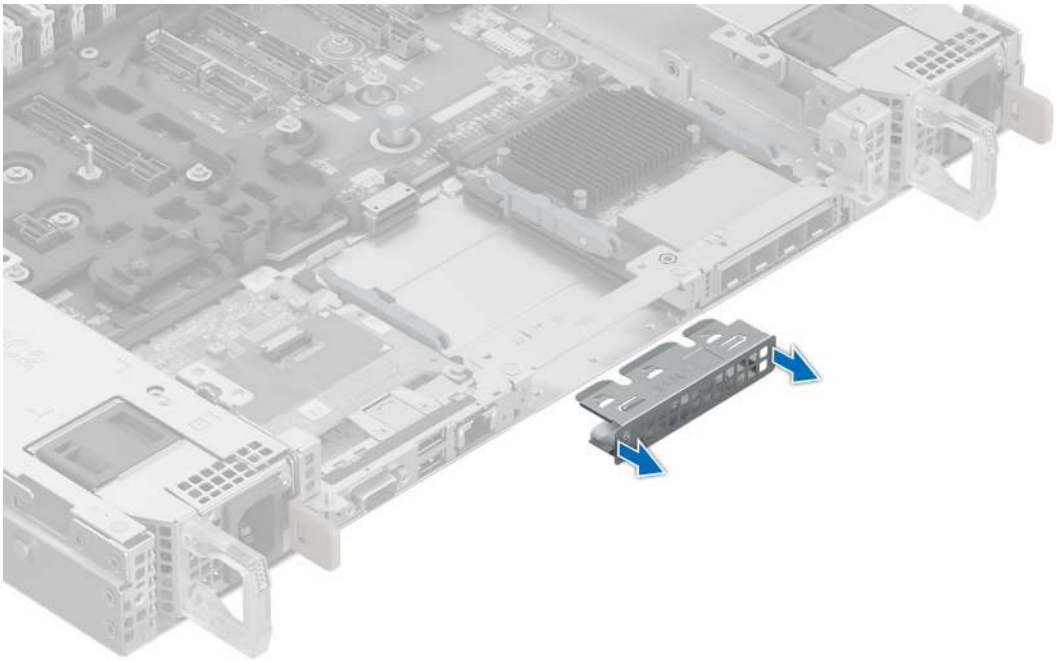

Figure 198. Removal of filler bracket

2. Open the blue latch on the HPM board.
3. Slide the BOSS-N1 DC-MHS module into the slot in the system.
4. Push until the BOSS-N1 DC-MHS module is connected to the connector on the HPM board.
5. Close the blue latch to lock the BOSS-N1 DC-MHS module to the system.

NOTE: The numbers on the image do not depict the exact steps. The numbers are for representation of sequence.

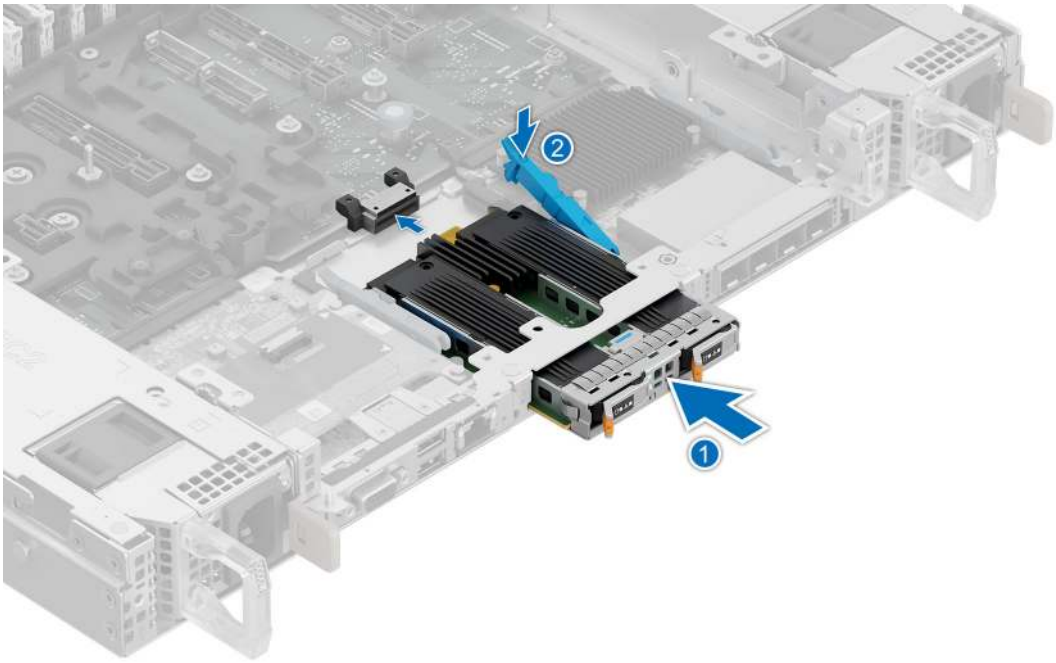

Figure 199. Installing the BOSS-N1 DC-MHS module

Next steps

1. Install the M.2 NVMe SSD module.
2. Install the rear expansion card riser or install the rear expansion card riser blanks
3. Follow the procedure listed in the After working inside your system.

Optional OCP NIC card

Removing the front OCP NIC card

Prerequisites

Steps

1. Using the Phillips 2 screwdriver, loosen the captive screw on the OCP NIC card tray.
2. Pull and slide the OCP NIC card tray out from the OCP NIC cage.

   NOTE: The numbers on the image do not depict the exact steps. The numbers are for representation of sequence.

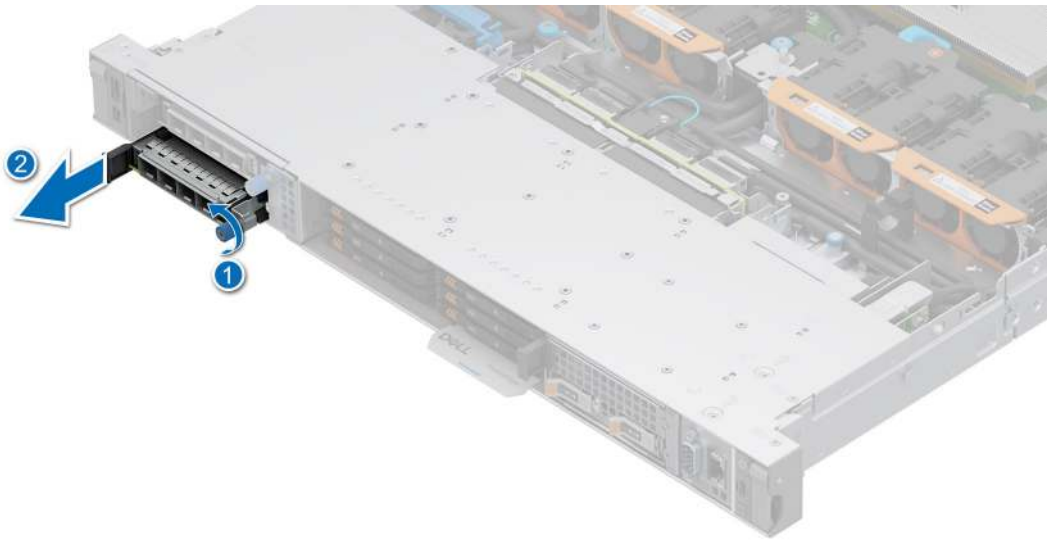

Figure 200. Removing the OCP NIC card tray from the OCP NIC cage

3. Push the clips outward, then pull and slide the OCP NIC card out from its tray.

   NOTE: The numbers on the image do not depict the exact steps. The numbers are for representation of sequence.

Figure 201. Removing the OCP NIC card from the tray

4. **NOTE:** Install the OCP blank if the OCP card is not being replaced.

   Align the OCP blank in the OCP slot and slide it in till firmly seated.

   NOTE: The numbers on the image do not depict the exact steps. The numbers are for representation of sequence.

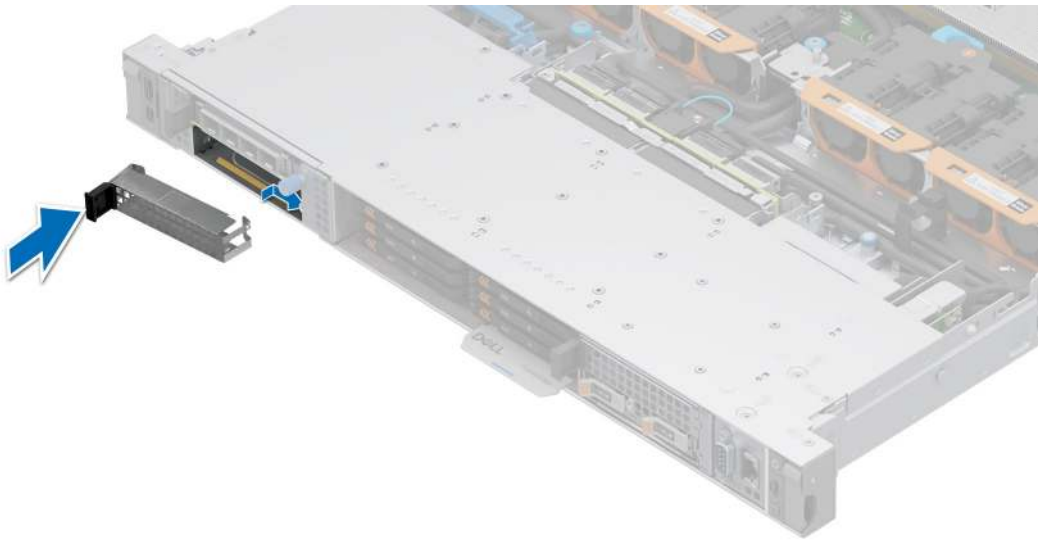

Figure 202. Installing the front OCP blank

Next steps

Replace the front OCP NIC card.

Installing the front OCP NIC card

Prerequisites

1. Follow the safety guidelines listed in the Safety instructions.
2. Follow the procedure listed in Before working inside your system.

CAUTION: Do not install GPUs, network cards, or other PCIe devices on your system that are not validated and tested by Dell. Damage caused by unauthorized and invalidated hardware installation will null and void the system warranty.

Steps

1. Align and slide the OCP NIC card into the OCP NIC card tray

Figure 203. Installing the OCP NIC card into the OCP NIC card tray

2. **NOTE:** If applicable remove the OCP NIC blank.

   Pull out the OCP NIC blank to remove from the system.

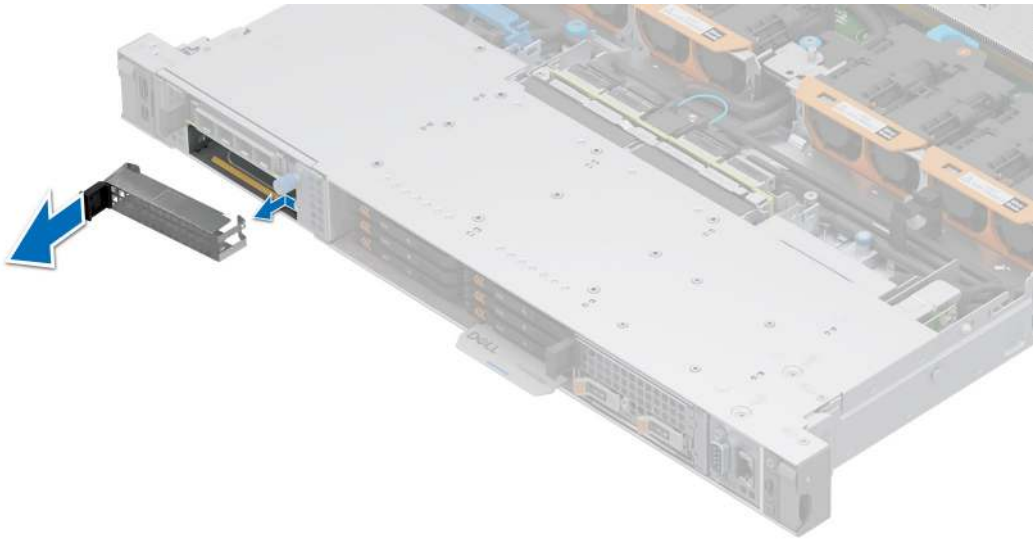

Figure 204. Removing the OCP NIC blank

3. Align and slide the OCP NIC card tray into the OCP NIC cage.
4. Using a Phillips 2 screwdriver, tighten the captive screw to secure the OCP NIC card tray in the cage.

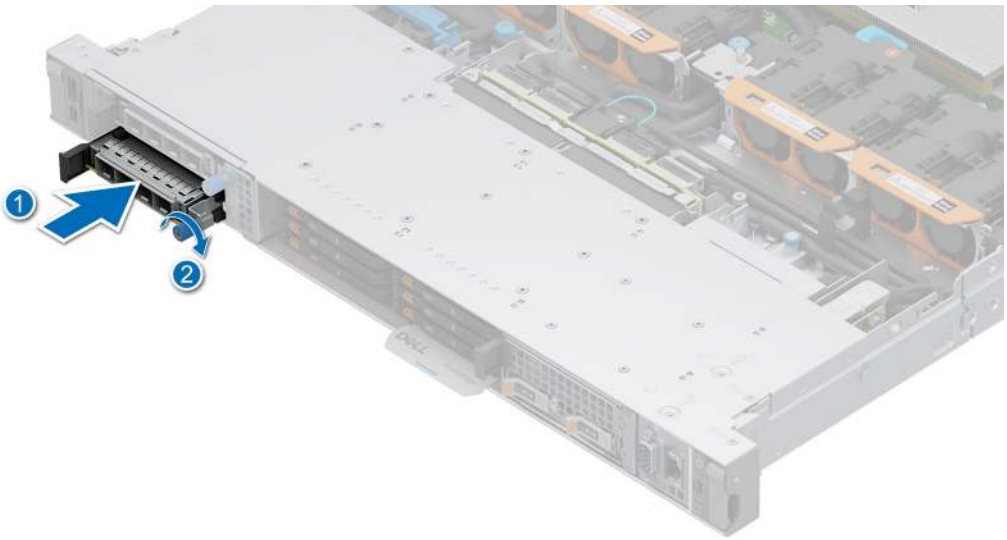

Figure 205. Installing the OCP NIC tray into the OCP NIC cage

Next steps

1. Follow the procedure listed in the After working inside your system.

Removing the front OCP NIC cage

Prerequisites

1. Follow the safety guidelines listed in the Safety instructions.
2. Follow the procedure listed in the Before working inside your system.
3. Remove the system cover.
4. Remove the ir shroud.
5. Remove the drive backplane cover.
6. If installedRemove the expansion card riser.
7. Remove the front OCP NIC card.

8. Disconnect the cables routing from the left side wall bracket and middle cable bracket from their connectors on the HPM board.

NOTE: See cable routing section for more information.

Steps

1. Using the Phillips 2 screwdriver, loosen the thumb screw on the OCP NIC cage.
2. Pull and slide the OCP NIC cage out from the front of the system.

NOTE: The numbers on the image do not depict the exact steps. The numbers are for representation of sequence.

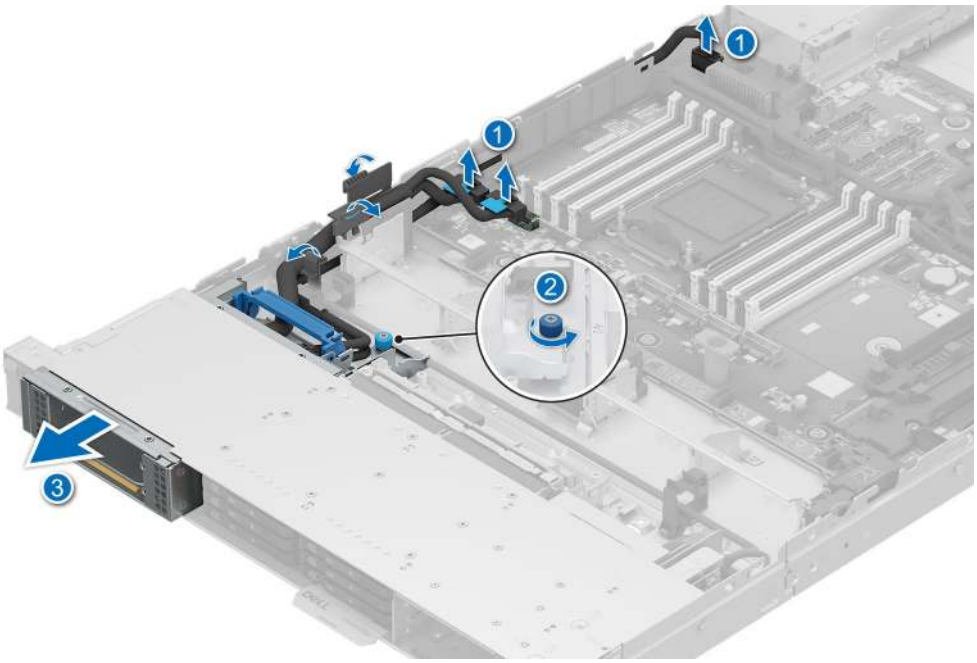

Figure 206. Removing an OCP NIC cage from front of the system

3. If the OCP NIC cage is not being replaced, install a filler tray into the system and secure it by tightening the captive screw using a Phillips 2 screwdriver.

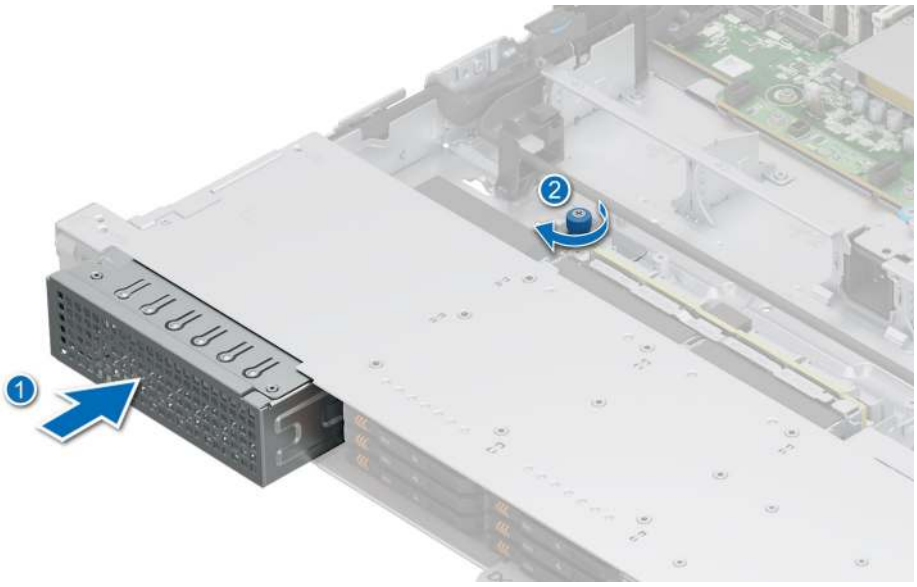

Figure 207. Installing an OCP NIC card filler bracket

Next steps

Replace the front OCP NIC cage.

Installing the front OCP NIC cage

Prerequisites

1. Follow the safety guidelines listed in the Safety instructions.
2. Follow the procedure listed in the Before working inside your system.
3. Remove the system cover.
4. Remove the ir shroud.
5. Remove the drive backplane cover.
6. If installedRemove the expansion card riser.
7. Remove the front OCP NIC card.
8. Disconnect the cables routing from the left side wall bracket and middle cable bracket from their connectors on the HPM board.

NOTE: See cable routing section for more information.

CAUTION: Do not install GPUs, network cards, or other PCIe devices on your system that are not validated and tested by Dell. Damage caused by unauthorized and invalidated hardware installation will null and void the system warranty.

Steps

1. If installed, remove the filler bracket from the front of the system by loosening the captive screw with a Phillips 2 screwdriver and then pulling the OCP NIC filler bracket out.

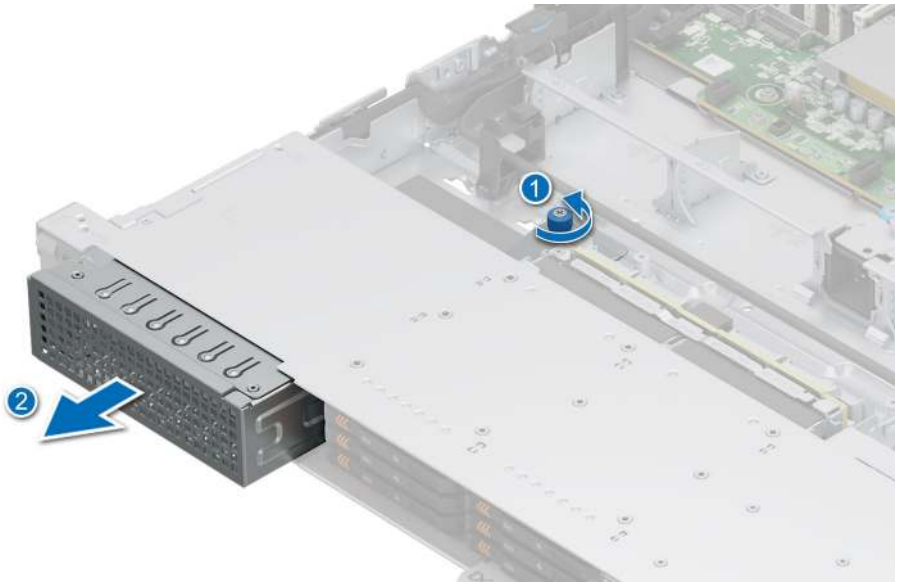

Figure 208. Removing an OCP NIC card filler bracket

2. Push and slide the OCP NIC cage into the front of the system.
3. Using the Phillips 2 screwdriver, tighten the thumb screw on the OCP NIC cage.

NOTE: The numbers on the image do not depict the exact steps. The numbers are for representation of sequence.

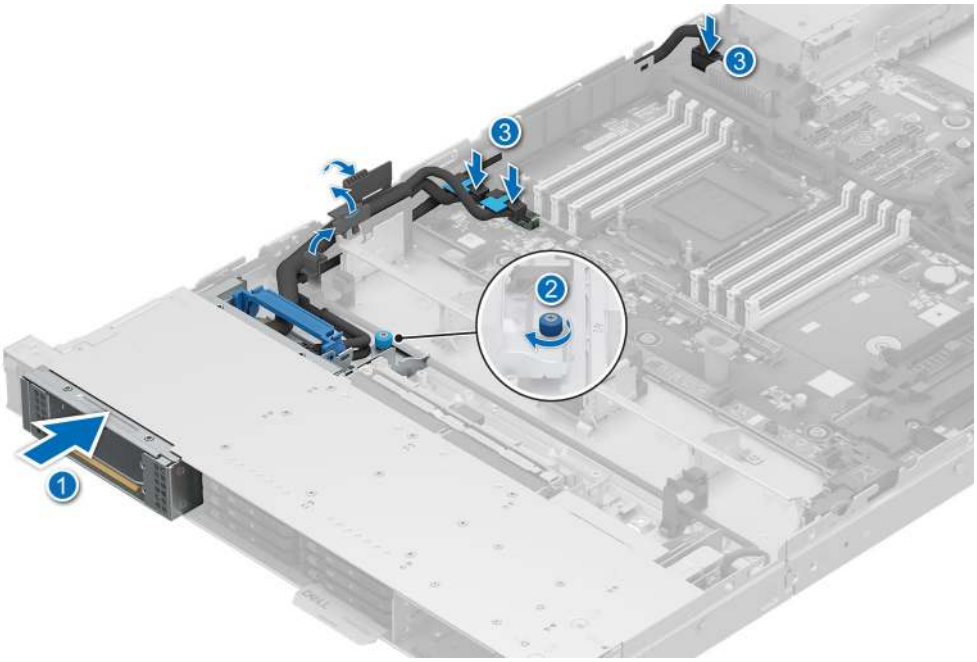

Figure 209. Installing an OCP NIC cage to front of the system

Next steps

Replace the front OCP NIC card.

Removing the rear OCP NIC card

Prerequisites

1. Follow the safety guidelines listed in the Safety instructions.
2. Follow the procedure listed in the Before working inside your system.
3. Remove the system cover.
4. If installed Remove the rear expansion card riser or remove the rear expansion card riser blanks

Steps

1. Open the blue latch to disengage the OCP NIC card.
2. Push the OCP NIC card towards the rear end of the system to disconnect from the connector on the HPM board.
3. Slide the OCP NIC card out of the slot on the system.

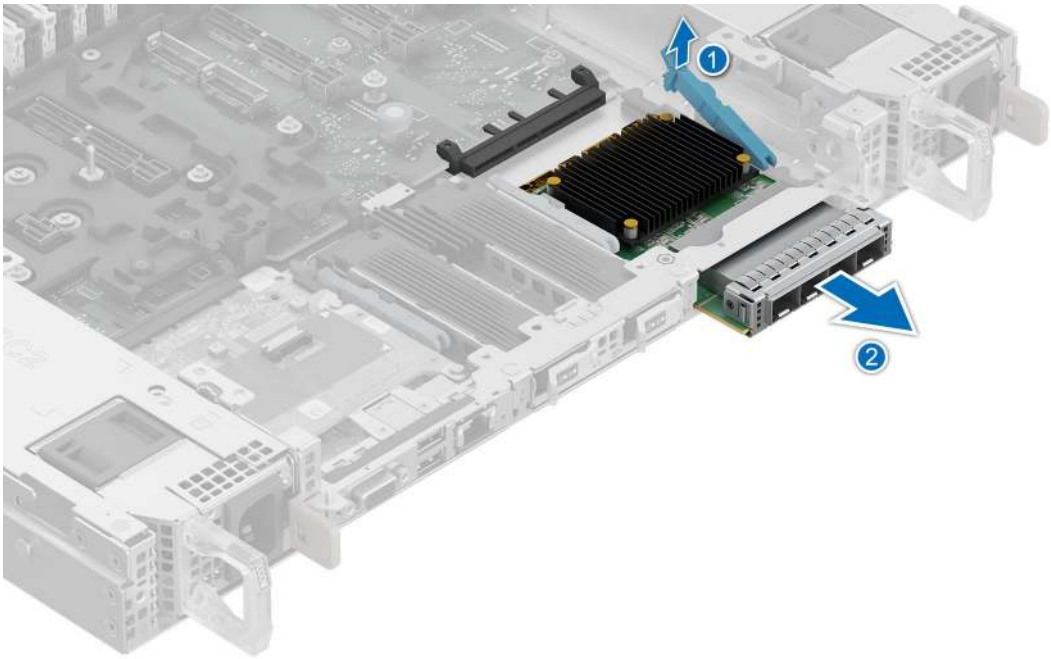

Figure 210. Removing the rear OCP NIC card

4. **NOTE:** If the OCP NIC card is not going to be replaced, install a filler bracket

Align and slide in the OCP filler in the slot till firmly seated .

NOTE: You must install a filler bracket over an empty expansion card slot to maintain Federal Communications Commission (FCC) certification of the system. The brackets also keep dust and dirt out of the system and aid in proper cooling and airflow inside the system.

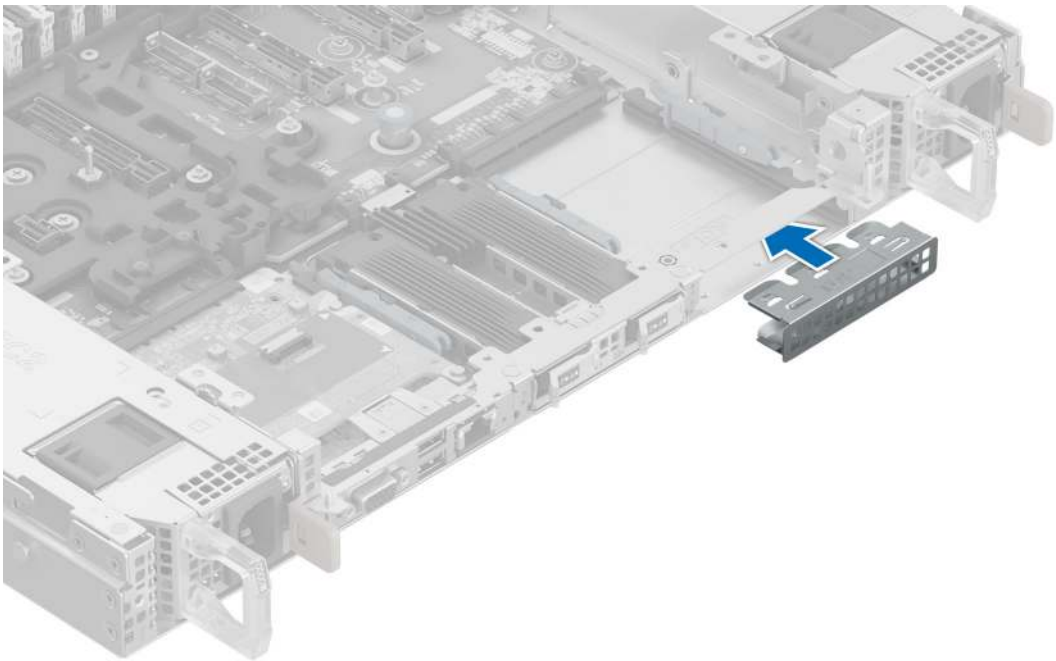

Figure 211. Installation of filler bracket

Next steps

1. Replace the rear OCP NIC card.

Installing the rear OCP NIC card

Prerequisites

1. Follow the safety guidelines listed in the Safety instructions.
2. Follow the procedure listed in the Before working inside your system.
3. Remove the rear expansion card riser or Remove the rear expansion card riser blanks

CAUTION: Do not install GPUs, network cards, or other PCIe devices on your system that are not validated and tested by Dell. Damage caused by unauthorized and invalidated hardware installation will null and void the system warranty.

Steps

1. If installed, remove the filler bracket.

   NOTE: Store the filler bracket for future use. Filler brackets must be installed in empty expansion card slots to maintain Federal Communications Commission (FCC) certification of the system. The brackets also keep dust and dirt out of the system and aid in proper cooling and airflow inside the system.

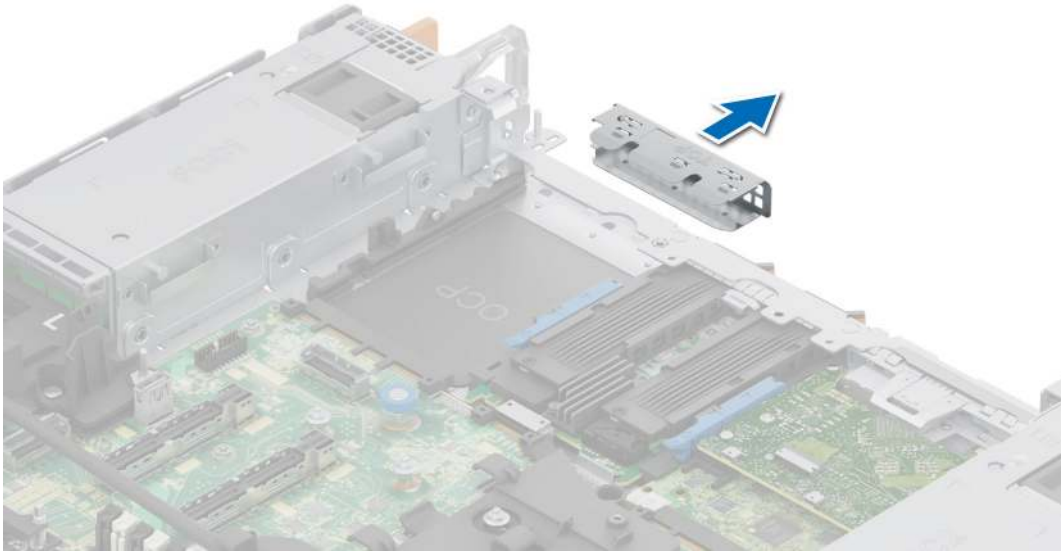

Figure 212. Removal of filler bracket

2. Open the blue latch on the HPM board.
3. Slide the OCP NIC card into the slot in the system.
4. Push until the OCP NIC card is connected to the connector on the HPM board.
5. Close the blue latch to lock the OCP NIC card to the system.

   NOTE: The numbers on the image do not depict the exact steps. The numbers are for representation of sequence.

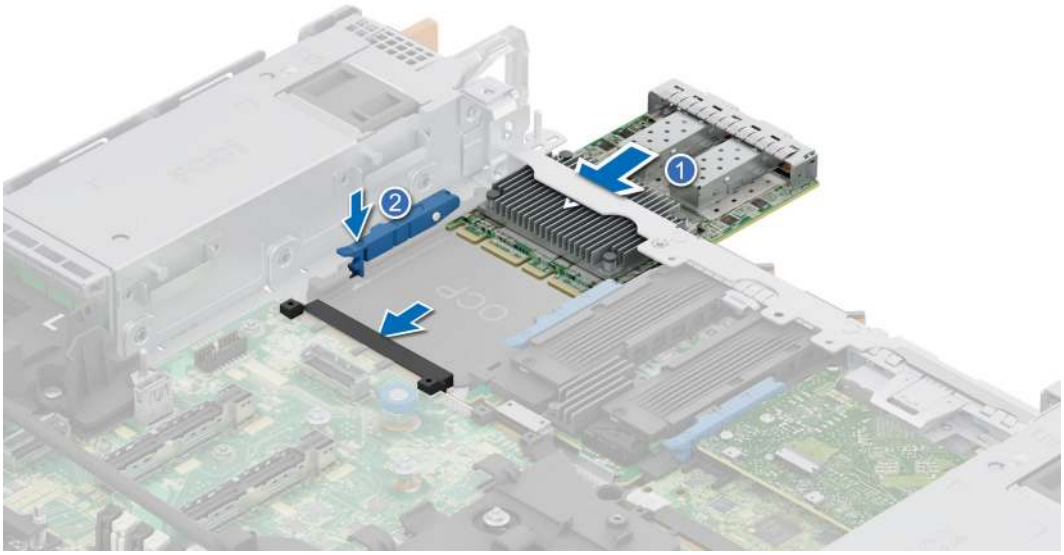

Figure 213. Installing the rear OCP NIC card

Next steps

1. Route and connect the cables, taking care not to damage them.

   NOTE: See cable routing section for more information.

2. Install the rear expansion card riser or install the rear expansion card riser blanks
3. Follow the procedure listed in After working inside your system.

Datacenter-Secure Control Module (DC-SCM)

This is a service technician replaceable part only.

Removing the DC-SCM board

Prerequisites

1. Follow the safety guidelines listed in the Safety instructions.
2. Follow the procedure listed in the Before working inside your system.
3. Remove the system cover.
4. If installed Remove the rear expansion card riser or remove the rear expansion card riser blanks

   NOTE: If the optional KVM module is installed kindly make note of the cable routing, see figure.61 under Cable routing.

Steps

1. Open the blue latch to disengage the DC-SCM board.
2. Push the DC-SCM board towards the rear end of the system to disconnect from the connector on the HPM board.
3. Slide the DC-SCM board out of the slot on the system.

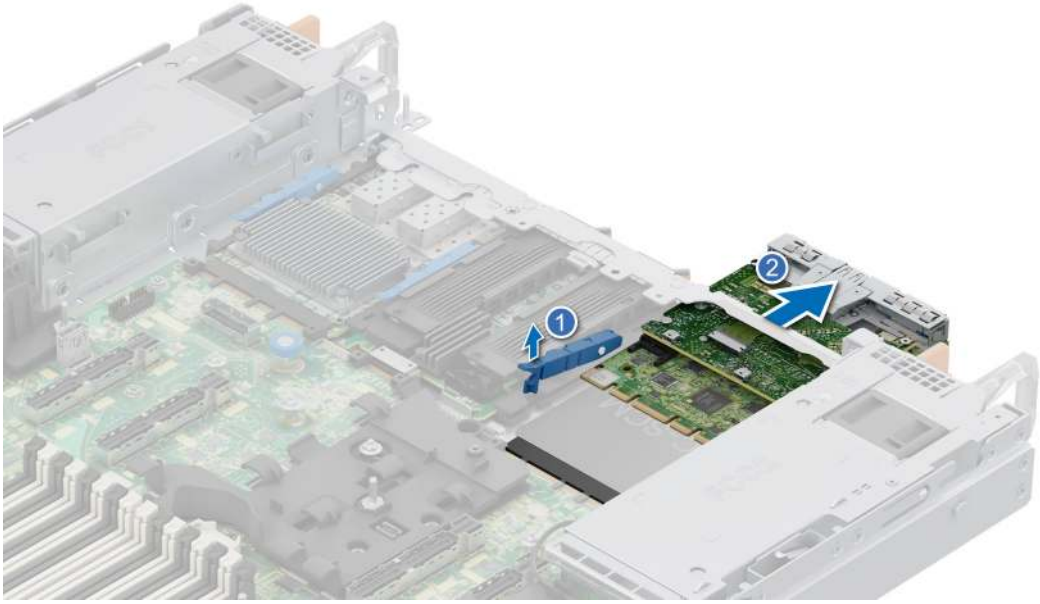

Figure 214. Removing the DC-SCM board

Next steps

NOTE: If a new DC-SCM board is being installed the Attic board must be removed from the existing DC-SCM board and installed on the new one.

1. Replace the DC-SCM board.

Installing the DC-SCM board

Prerequisites

1. Follow the safety guidelines listed in the Safety instructions.
2. Follow the procedure listed in the Before working inside your system.
3. Remove the system cover.
4. If installed Remove the rear expansion card riser or Remove the rear expansion card riser blanks

NOTE: If a new DC-SCM board is being installed the Attic board must be removed from the existing DC-SCM board and installed on the new one.

NOTE: If the optional KVM module is installed kindly make note of the cable routing, see figure.61 under Cable routing.

CAUTION: Do not install GPUs, network cards, or other PCIe devices on your system that are not validated and tested by Dell. Damage caused by unauthorized and invalidated hardware installation will null and void the system warranty.

Steps

1. Open the blue latch on the HPM board.
2. Slide the DC-SCM board into the slot in the system.
3. Push until the DC-SCM board is connected to the connector on the HPM board.
4. Close the blue latch to lock the DC-SCM board to the system.

NOTE: The numbers on the image do not depict the exact steps. The numbers are for representation of sequence.

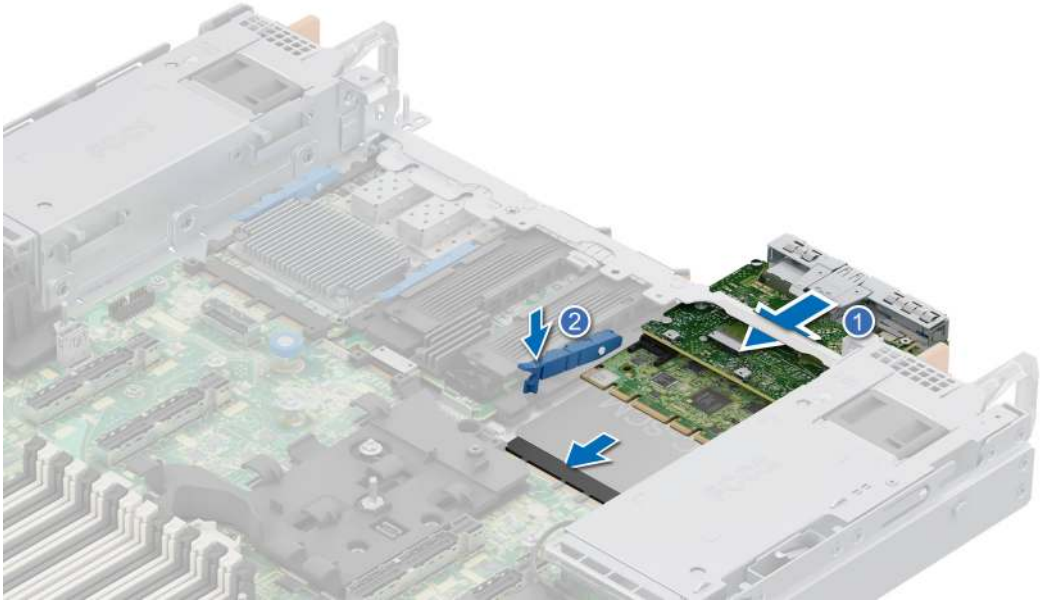

Figure 215. Installing the DC-SCM board

Next steps

1. If removed Install the rear expansion card riser or install the rear expansion card riser blanks
2. Power on the system.
3. Ensure that you perform the following steps:
   a. Use the Easy Restore feature to restore the BIOS and Service Tag. See the Restoring the system using the Easy Restore feature section.
   b. If the service tag is not backed up in the backup flash device, enter the system service tag manually. See the Manually update the Service Tag by using System Setup section.
   c. Install BIOS and iDRAC version updates, Diagnostics, and OS Driver Pack and OS Collector.
   d. Re-enable the Trusted Platform Module (TPM). See the Initializing TPM section.
4. Follow the procedure listed in After working inside your system.

Restoring the system using Easy Restore

The Easy Restore feature restores the server service tag and BIOS configuration data after replacing the Datacenter-Secure Control Module (DC-SCM). System configuration data is automatically maintained in a backup flash device within the system. If the BIOS detects a new DC-SCM during server boot, the system prompts the user to restore the backup system configuration data.

About this task

For more information about the Easy Restore feature, see Open BMC configuration Users Guide at Support for Open Server Manager | Documentation | Dell India.

When the DC-SCM is booted for the first time, it presents a screen with settings it can restore, below is a list of options/steps available:

Steps

1. To restore the system configuration data, press **Y**
2. To skip restore for this boot, press **N**
3. Enter BIOS setup to manually restore Service Tag, press **F2**

Figure 216. Easy Restore

Manually update the Service Tag

After replacing a HPM board, if Easy Restore fails, follow this process to manually enter the Service Tag, using **System Setup**.

About this task

If you know the system service tag, use the **System Setup** menu to enter the service tag.

Steps

1. Power on the system.
2. To enter the **System Setup**, press **F2**.
3. Click **Service Tag Settings**.
4. Enter the service tag.

   NOTE: You can enter the service tag only when the **Service Tag** field is empty. Ensure that you enter the correct service tag. Once the service tag is entered, it cannot be updated or changed. Incorrectly entered service tag will lead to HPM board replacement.

5. Click **OK**.

Attic board

This is a service technician replaceable part only.

Removing the Attic board

Prerequisites

1. Follow the safety guidelines listed in the Safety instructions.
2. Follow the procedure listed in the Before working inside your system.
3. Remove the system cover.
4. If installed Remove the rear expansion card riser or remove the rear expansion card riser blanks
5. Remove the DC-SCM board.

NOTE: If the optional KVM module is installed, note the cable routing (see Figure 61) Cable routing.

Steps

1. Using the Phillips 1 screwdriver, loosen the captive screws securing the attic board to the DC-SCM board.
2. Tilt and lift the Attic board from the DC-SCM guide pins.

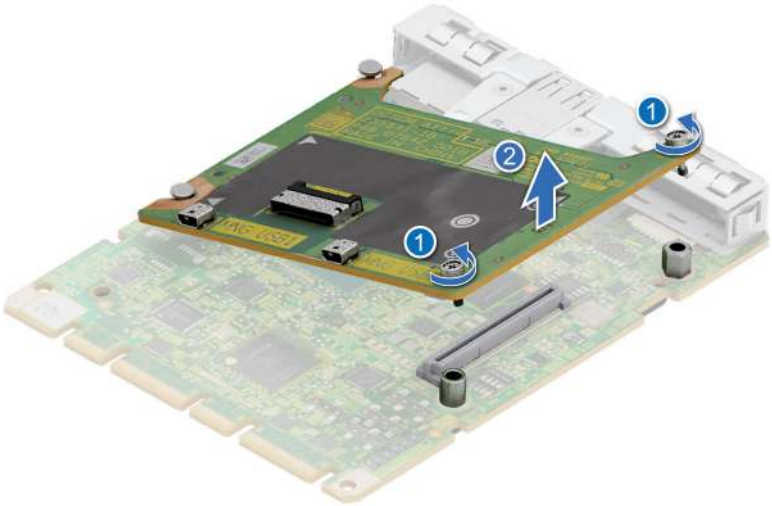

Figure 217. Removing the Attic board

Next steps

1. Replace the Attic board.

Installing the Attic board

Prerequisites

1. Follow the safety guidelines listed in the Safety instructions.
2. Follow the procedure listed in the Before working inside your system.
3. Remove the system cover.
4. If installed Remove the rear expansion card riser or remove the rear expansion card riser blanks
5. Remove the DC-SCM board.

NOTE: If the optional KVM module is installed, note the cable routing (see Figure 61) under Cable routing.

CAUTION: Do not install GPUs, network cards, or other PCIe devices on your system that are not validated and tested by Dell. Damage caused by unauthorized and invalidated hardware installation will null and void the system warranty.

Steps

1. Align the Attic board at an angle with the guide pins on the DC-SCM board.
2. Press until the Attic board is connected to the connector on the DC-SCM board.
3. Using a Phillips 1 screwdriver, tighten the captive screws.

   NOTE: The numbers on the image do not depict the exact steps. The numbers are for representation of sequence.

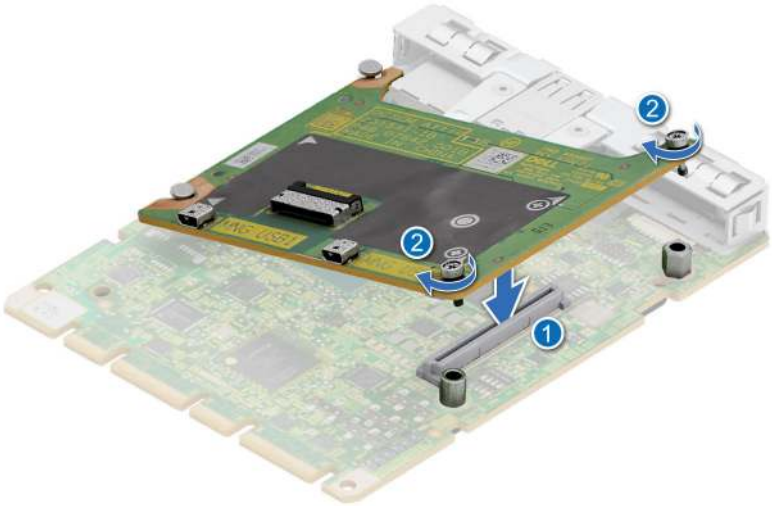

Figure 218. Installing the Attic board

Next steps

1. Install the DC-SCM board.
2. If removed Install the rear expansion card riser or install the rear expansion card riser blanks
3. Follow the procedure listed in After working inside your system.

Internal USB

This is a service technician replaceable part only.

Removing the internal USB

Prerequisites

CAUTION: To avoid interference with other components in the server, the maximum permissible dimensions of the USB memory key are 15.9 mm wide x 57.15 mm long x 7.9 mm high.

1. Follow the safety guidelines listed in the Safety instructions.
2. Follow the procedure listed in the Before working inside your system.
3. Remove the system cover.

Steps

Lift the internal USB card to disconnect from the connector on the HPM board.

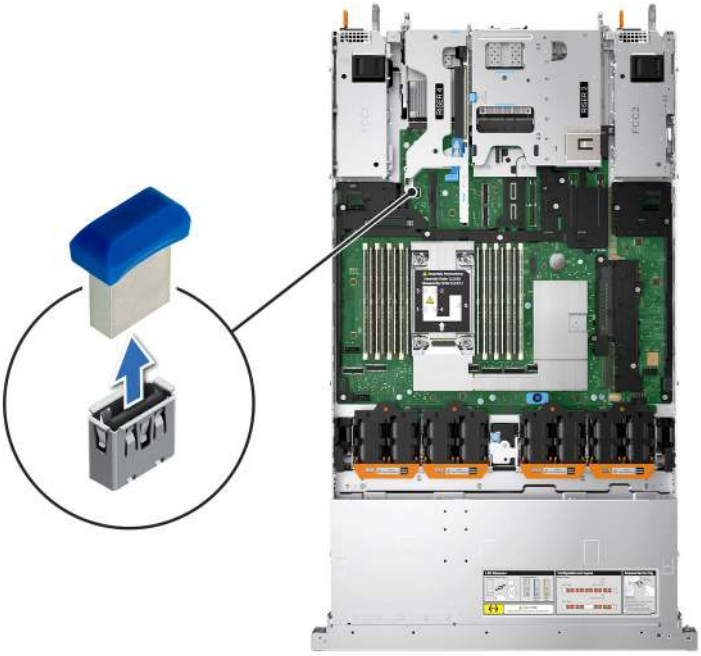

Figure 219. Removing the internal USB card

Next steps

1. Replace the internal USB card.

Installing the Internal USB

Prerequisites

1. Follow the safety guidelines listed in the Safety instructions.
2. Follow the procedure listed in the Before working inside your system.
3. Remove the system cover.

Steps

Align the internal USB card with the USB port on the HPM board and press firmly until it is properly seated.

NOTE: For information about the exact location of USB on HPM board, see HPM board jumpers and connectors section.

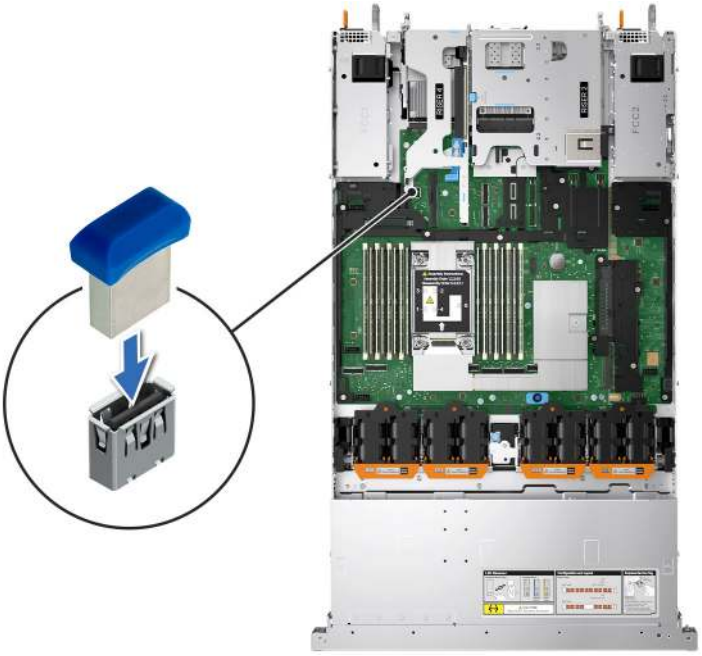

Figure 220. Installing the internal USB card

Next steps

1. Follow the procedure listed in After working inside your system.
2. While booting, press F2 to enter **System Setup** and verify that the system detects the USB memory key.

System battery

This is a service technician replaceable part only.

Replacing the system battery

Prerequisites

WARNING: There is a danger of a new battery exploding if it is incorrectly installed. Replace the battery only with the same or equivalent type that is recommended by the manufacturer. Discard used batteries according to the manufacturer's instructions. See the Safety instructions that came with your system for more information.

1. Follow the safety guidelines listed in the Safety instructions.
2. Follow the procedure listed in the Before working inside your system.
3. Remove the system cover.
4. Remove the air shroud.

Steps

1. Press and hold the battery socket retention latch, for the battery to pop out.

   NOTE: If the battery does not pop out, then lift it out of the socket.

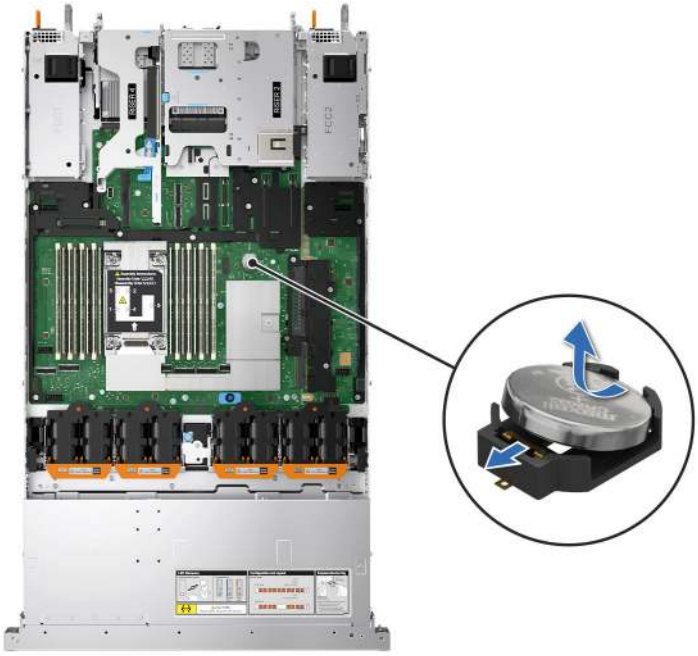

Figure 221. Removing the system battery

2. To install a new system battery, hold the battery with the positive side facing up at an angle and slide it under the battery holder socket latch.
3. Press the battery into the connector until it snaps into place.

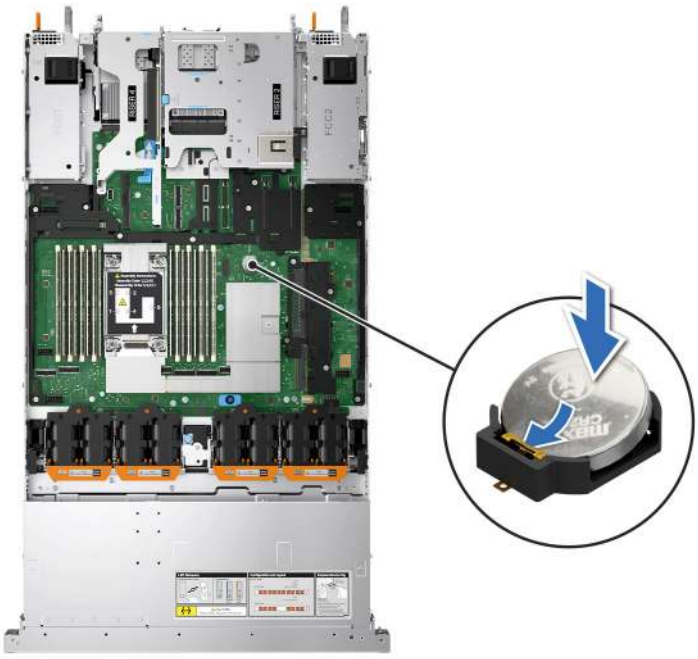

Figure 222. Installing the system battery

Next steps

1. Install the air shroud.
2. Install the system cover.
3. Follow the procedure listed in After working inside your system.
4. Confirm that the battery is operating properly, by performing the following steps:
   a. Enter the System Setup, while booting, by pressing F2.

b. Enter the correct time and date in the System Setup **Time** and **Date** fields.
c. **Exit** the System Setup.
d. To test the newly installed battery, check the time and date at least an hour after installing the battery.
e. Enter the System Setup and if the time and date are still incorrect, see Getting help section.

Intrusion switch

This is a service technician replaceable part only.

Removing the intrusion switch module

Prerequisites

1. Follow the safety guidelines listed in the Safety instructions.
2. Follow the procedure listed in the Before working inside your system.
3. Remove the system cover.
4. If installed Remove the rear expansion card riser or remove the rear expansion card riser blanks

NOTE: Ensure that you note the routing of the cable as you remove it from the HPM board. See figure.62 under Cable routing for more information.

Steps

1. Using a Phillips 1 screwdriver, loosen the screws on the intrusion switch module.
2. Disconnect the intrusion switch cable and the dongle cable.

   NOTE: Detach the dongle cable from the intrusion switch and keep it safe to be used when replacing with the new intrusion switch.

3. Disconnect the dongle cable in the J slot connector on the HPM board.

   NOTE: The intrusion switch cable is connected to the dongle cable, which in turn is connected to the HPM board.

4. Lift the intrusion switch module along with dongle cable out of the system.

   NOTE: The numbers on the image do not depict the exact steps. The numbers are for representation of sequence.

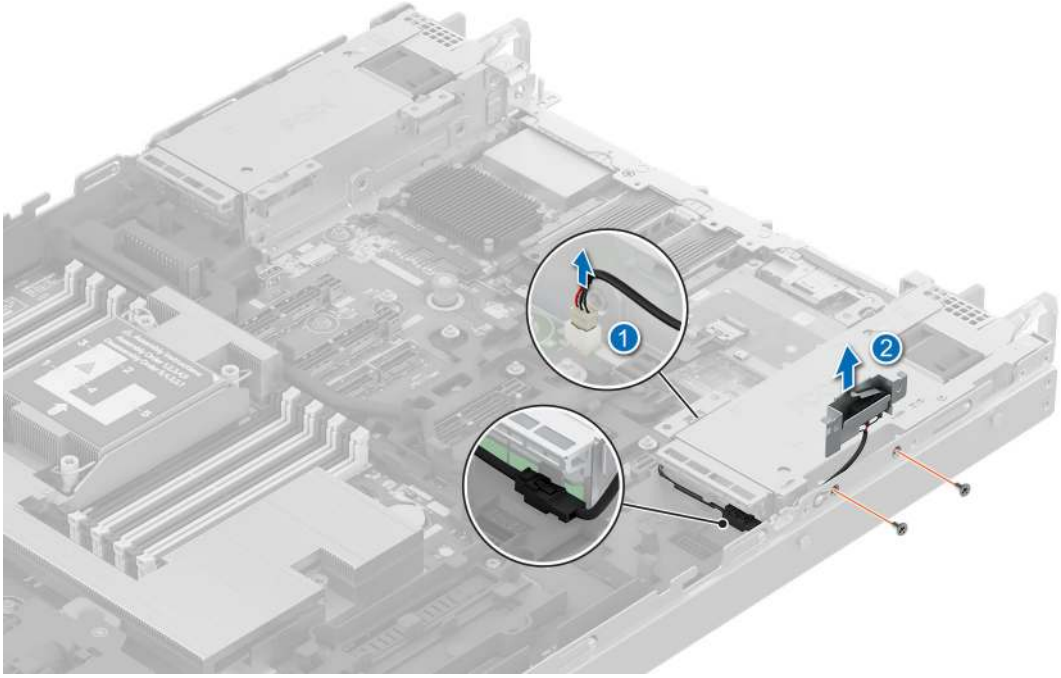

Figure 223. Removing the intrusion switch module

Next steps

1. Replace the intrusion switch module.

Installing the intrusion switch module

Prerequisites

1. Follow the safety guidelines listed in the Safety instructions.
2. Follow the procedure listed in Before working inside your system.
3. Remove the system cover.
4. If installed Remove the rear expansion card riser or remove the rear expansion card riser blanks

NOTE: Route the cable properly when you replace it to prevent the cable from being pinched or crimped. See figure.62 under Cable routing for more information.

Steps

1. Align and place the intrusion switch module into the system.
2. Using a Phillips 1 screwdriver, tighten the screws to secure the intrusion switch module to the system chassis.
3. Connect the dongle cable and the intrusion switch cable.
4. Reconnect the dongle cable to the J slot connector on the HPM board.

   NOTE: The intrusion switch cable is connected to the dongle cable, which in turn is connected to the HPM board.

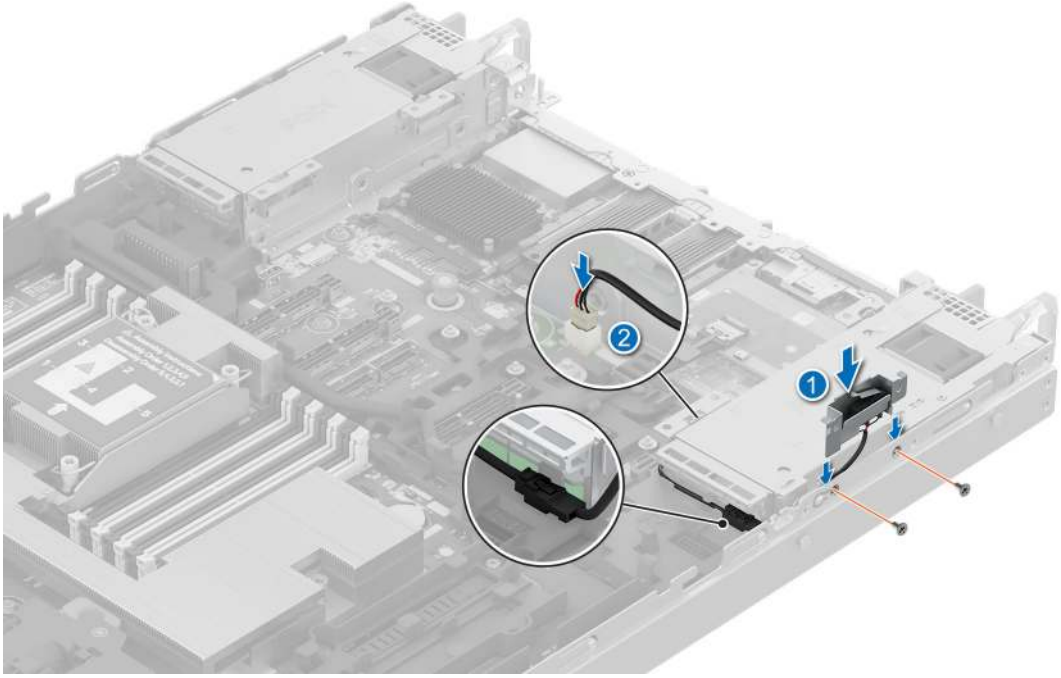

Figure 224. Installing the intrusion switch module

Next steps

1. Install the system cover,
2. If removed Install the rear expansion card riser or install the rear expansion card riser blanks
3. Follow the procedure listed in After working inside your system.

Power supply unit

Removing a power supply unit

Prerequisites

CAUTION: The system requires one power supply unit (PSU) for normal operation. On power-redundant systems, remove and replace only one PSU at a time in a system that is powered on.

1. Follow the safety guidelines listed in the Safety instructions.
2. Disconnect the power cable from the power outlet and from the PSU that you intend to remove.
3. Remove the cable from the strap on the PSU handle.
4. Unlatch and lift or remove the optional cable management accessory if it interferes with the PSU removal.

NOTE: For information about the cable management when the PSU is removed or installed while the system is in a rack, see the system's cable management arm documentation at PowerEdge Manuals.

Steps

Press the release latch and holding the PSU handle, slide the PSU out of the bay.

Figure 225. Removing a power supply unit

Next steps

1. Replace the PSU or install the PSU blank.

Installing a power supply unit

Prerequisites

1. Follow the safety guidelines listed in the Safety instructions.
2. For systems that support redundant PSU, ensure that both the PSUs are of the same type and have the same maximum output power.

   NOTE: The maximum output power (shown in watts) is listed on the PSU label.

3. If required, Remove the PSU blank.

Steps

Slide the PSU into the PSU bay until the release latch snaps into place.

Figure 226. Installing a power supply unit

Next steps

1. If you have unlatched or removed the cable management accessory, reinstall or relatch it. For information about the cable management when the PSU is removed or installed while the system is in the rack, see the system's cable management accessory documentation at PowerEdge Manuals.
2. Connect the power cable to the PSU, and plug the cable into a power outlet.

CAUTION: When connecting the power cable to the PSU, secure the cable to the PSU with the strap.

NOTE: When installing hot swapping, or hot adding a new PSU, wait for 15 seconds for the system to recognize the PSU and determine its status. The PSU redundancy may not occur until discovery is complete. The PSU status indicator turns green to indicate that the PSU is functioning properly.

Removing a power supply unit blank

Prerequisites

Follow the safety guidelines listed in the Safety instructions.

Steps

Pull the blank out of the system.

CAUTION: For proper system cooling, the PSU blank must be installed in the second PSU bay in a non-redundant configuration. Remove the PSU blank only if you are installing a second PSU.

Figure 227. Removing a power supply unit blank

Next steps

1. Replace the PSU blank or install the PSU.

Installing a power supply unit blank

Prerequisites

1. Follow the safety guidelines listed in the Safety instructions.

   NOTE: Install the power supply unit (PSU) blank only in the second PSU bay.

2. If required, Remove the PSU. or Remove the power supply blank.

Steps

Align the PSU blank with the PSU bay and push it into the PSU bay until it clicks into place.

NOTE: Make sure that the "Top" mark on the PSU blank is on the upper side.

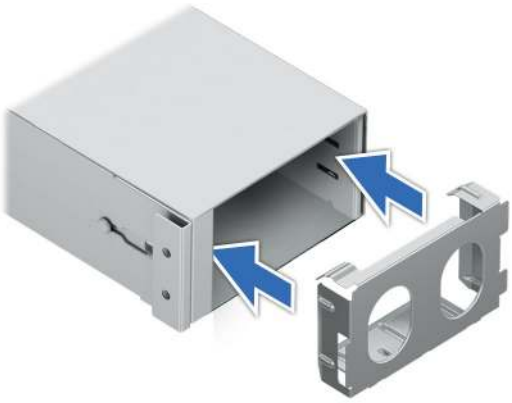

Figure 228. Installing a power supply unit blank

DB9+RJ45 module

This is a service technician replaceable part only.

Removing the DB9+RJ45 module

Prerequisites

1. Follow the safety guidelines listed in the Safety instructions.
2. Follow the procedure listed in the Before working inside your system.
3. Remove the system cover.
4. Remove the air shroud.
5. Remove the backplane cover

Steps

1. Disconnect the DB9+RJ45 port cable from the HPM board.
2. Using Phillips 2 screwdriver, remove the screws on the DB9+RJ45 module. Slide the module out of the system.

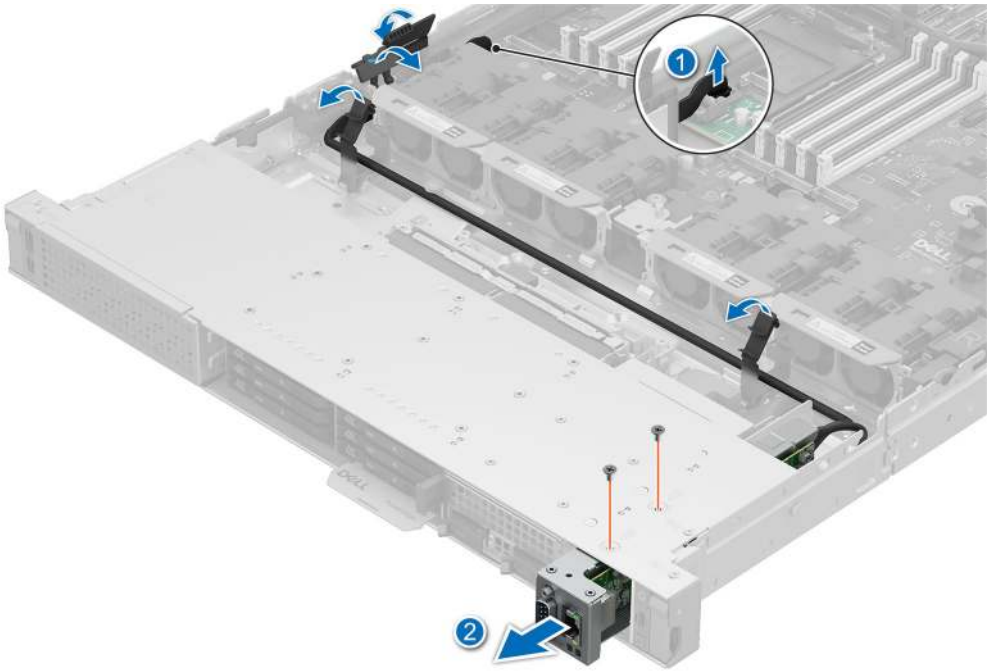

Figure 229. Disconnecting the DB9+RJ45 module

Next steps

1. Replace the DB9+RJ45 module.

Installing the DB9+RJ45 module

Prerequisites

1. Follow the safety guidelines listed in the Safety instructions.
2. Follow the procedure listed in Before working inside your system.
3. Remove the system cover.
4. Remove the air shroud.
5. Remove the backplane cover

Steps

1. Align the hole on the module with the screw hole on the system.
2. Route the DB9+RJ45 cable through the side bracket. Reconnect the DB9+RJ45 cable on the HPM board.
3. Using the Phillips 2 screwdriver, secure the DB9+RJ45 module to the system with the screws.

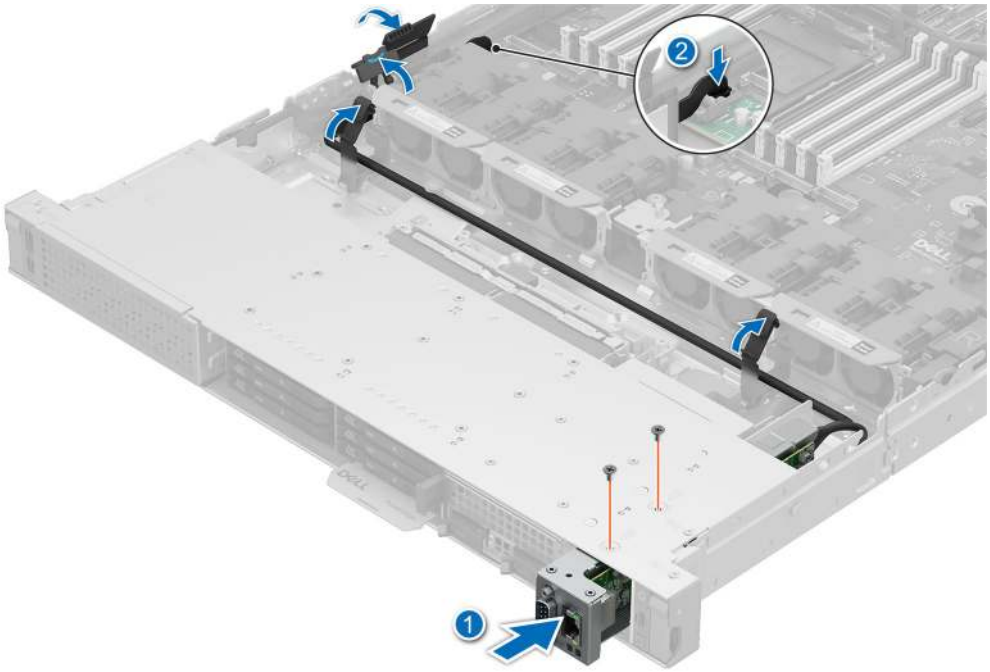

Figure 230. Installing the DB9+RJ45 port

Next steps

1. Route and connect the cables, taking care not to damage them.

   NOTE: See cable routing section for more information.

2. Install the backplane cover
3. Install the air shroud.
4. Install the system cover.
5. Follow the procedure listed in After working inside your system.

Trusted Platform Module

TPM is soldered down to the DC-SCM.

If the Trusted Platform Module (TPM) is identified as the root cause of the problem, a full DC-SCM replacement is necessary.

For more information on TPM see Trusted Platform Module (TPM) Summary.

Initializing TPM 2.0 for users

Steps

1. Initialize the TPM.
   a. While booting your system, press F2 to enter System Setup.
   b. On the **System Setup Main Menu** screen, click **System BIOS** > **System Security Settings**.
   c. From the **TPM Security** option, select **On**.
   d. Save the settings.
   e. Restart your system.
2. The **TPM Status** changes to **Enabled, Activated**.

HPM board

This is a service technician replaceable part only.

NOTE: System board is know as Host Processor Module (HPM) board.

Removing the HPM board

Prerequisites

CAUTION: If you are using the Trusted Platform Module (TPM) with an encryption key, you may be prompted to create a recovery key during program or System Setup. Be sure to create and safely store this recovery key. If you replace this HPM board, you must supply the recovery key when you restart your system or program before you can access the encrypted data on your drives.

1. Follow the safety guidelines listed in the Safety instructions.
2. Follow the procedure listed in the Before working inside your system.
3. Remove the following components:
   a. Air shroud
   b. Cooling fans
   c. Memory modules
   d. Rear expansion card risers or rear expansion card riser blanks
   e. Processor and heat sink module
   f. Rear OCP if installed
   g. Rear BOSS-N1 DC-MHS if installed
   h. DC-SCM
   i. Internal USB memory key (if installed)if installed
   j. Power supply units (PSU)
   k. Disconnect all the cables from the HPM board and make note of all the cable connections.

      CAUTION: Take care not to damage the system identification button while removing the HPM board from the system.

      CAUTION: Do not lift the system board by holding a memory module, processor, or other components.

Steps

1. Using the HPM board holder and plunger, slide the HPM board towards the front of the system.
2. Securely hold the holder and plunger to carefully lift the HPM board out of the chassis.

Figure 231. Removing the HPM board

Next steps

1. Install the HPM board.

Installing the HPM board

Prerequisites

1. Follow the safety guidelines listed in the Safety instructions.
2. Follow the procedure listed in Before working inside your system.
3. If you are replacing the HPM board, remove all the components that are listed in the removing the HPM board section.

Steps

1. Unpack the new HPM board assembly.

   CAUTION: Do not lift the system board by holding a memory module, processor, or other components.

   CAUTION: Take care not to damage the system identification button while placing the HPM board into the chassis.

2. Holding the HPM board holder and plunger, align and lower the HPM board into the system.
3. Slide the HPM board towards the rear of the chassis until the connectors are firmly seated in the slots.

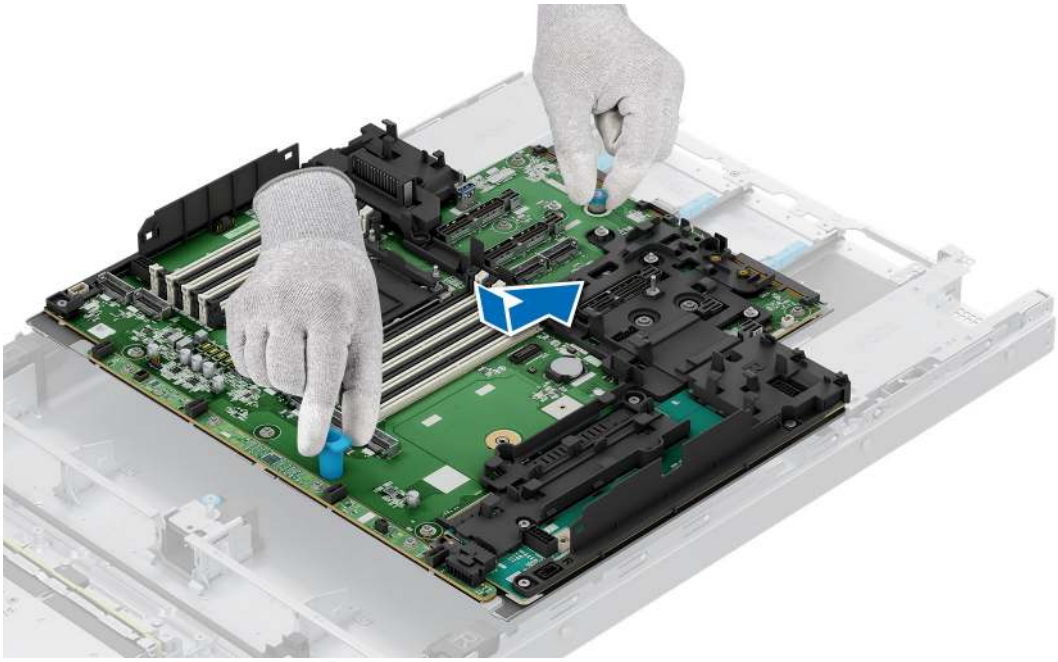

Figure 232. Installing the HPM board

Next steps

1. Replace the following components:
   a. Internal USB memory key if removed
   b. Rear OCP card if removed
   c. Rear BOSS-N1 DC-MHS if removed
   d. DC-SCM
   e. Processor and heat sink module
   f. Memory modules
   g. Rear expansion card risers or rear expansion card riser blanks
   h. Cooling fans
   i. Power supply units (PSU)
   j. Air shroud
2. Reconnect all cables to the HPM board.

   NOTE: Ensure that the cables inside the system are routed along the chassis wall and secured using the cable securing bracket.

3. Follow the procedure listed in After working inside your system.

Control panel

This is a service technician replaceable part only.

Removing the Right Control Panel (RCP) - Primary

Prerequisites

1. Follow the safety guidelines listed in the Safety instructions.
2. Follow the procedure listed in the Before working inside your system.
3. Remove the drive backplane cover.

Steps

1. Disconnect the right control panel cable from the connectors on the HPM board.
2. Using the Phillips 1 screwdriver, remove the two screws that secure the right/primary control panel to the system.
3. Remove the cable cover away from the system.
4. Holding the right /primary control panel, slide it out of the system.

   NOTE: Observe the routing of the cable assembly as you remove the right control panel from the system.

   NOTE: The numbers on the image do not depict the exact steps. The numbers are for representation of sequence.

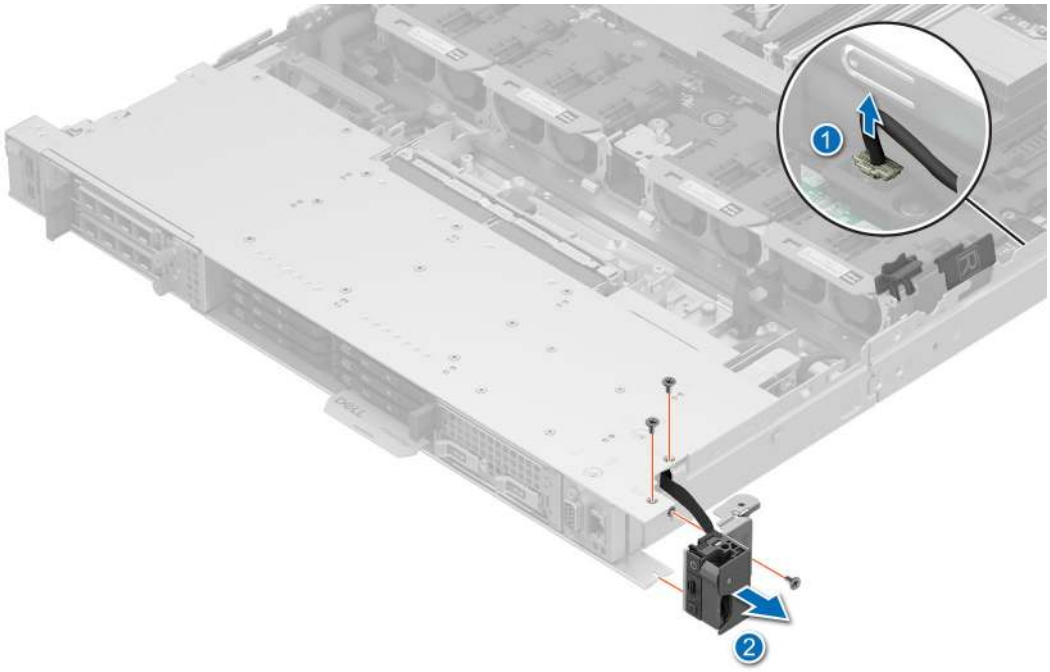

Figure 233. Removing the right control panel

Next steps

1. Replace the right/primary control panel.

Installing the Right Control Panel (RCP) - Primary

Prerequisites

1. Follow the safety guidelines listed in the Safety instructions.
2. Follow the procedure listed in the Before working inside your system.
3. Remove the drive backplane cover.

Steps

1. Align and slide the right/primary control panel into the slot on the system.
2. Route the right/primary control panel cable through the side wall of the system.

   NOTE: Route the cable properly to prevent the cable from being pinched or crimped.

3. Connect the right/primary control panel cable to the connectors on the HPM board.
4. Using the Phillips 1 screwdriver, tighten the screws that secure the right control panel and the cable cover to the system.

   NOTE: The numbers on the image do not depict the exact steps. The numbers are for representation of sequence.

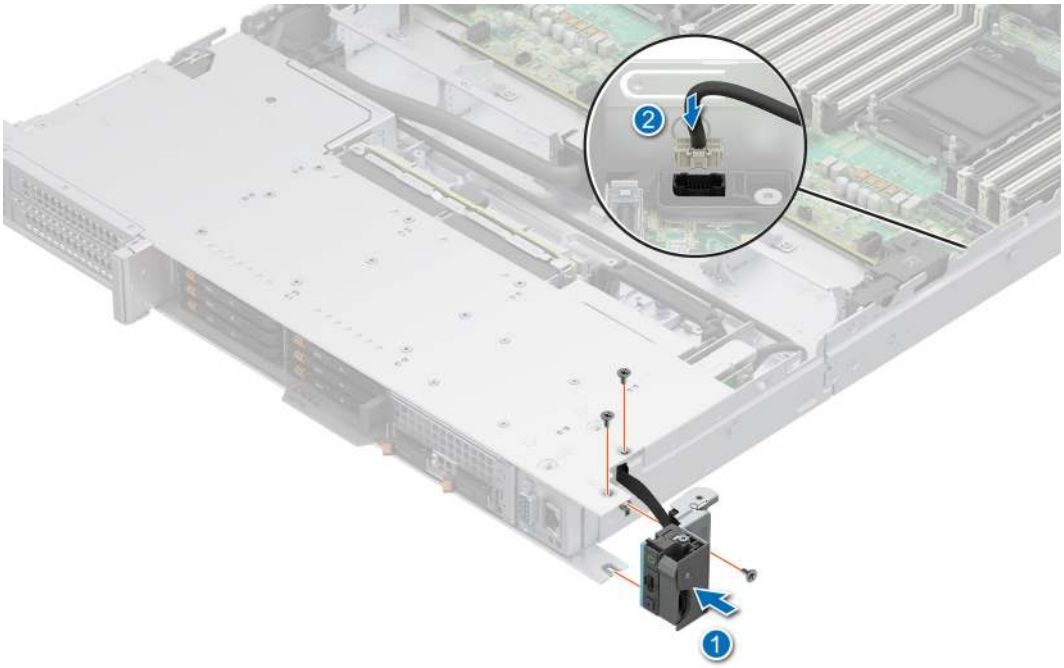

Figure 234. Installing the right control panel

Next steps

1. Install the drive backplane cover.
2. Follow the procedure listed in After working inside your system.

Removing the Left Control Panel (LCP)- Secondary KVM/Quick Sync

Prerequisites

1. Follow the safety guidelines listed in the Safety instructions.
2. Follow the procedure listed in the Before working inside your system.
3. Remove the drive backplane cover.

Steps

1. Disconnect the control panel cable from the connector on the HPM/Attic board.
2. Using the Phillips 1 screwdriver, remove the screws that secure the KVM or Quick Sync left/secondary control panel and the cable cover to the system.
3. Remove the cable cover away from the system.
4. Holding the cable, slide the KVM/Quick Sync left control panel out of the system.

   NOTE: Observe the routing of the cable as you remove the KVM left control panel from the system.

   NOTE: The numbers on the image do not depict the exact steps. The numbers are for representation of sequence.

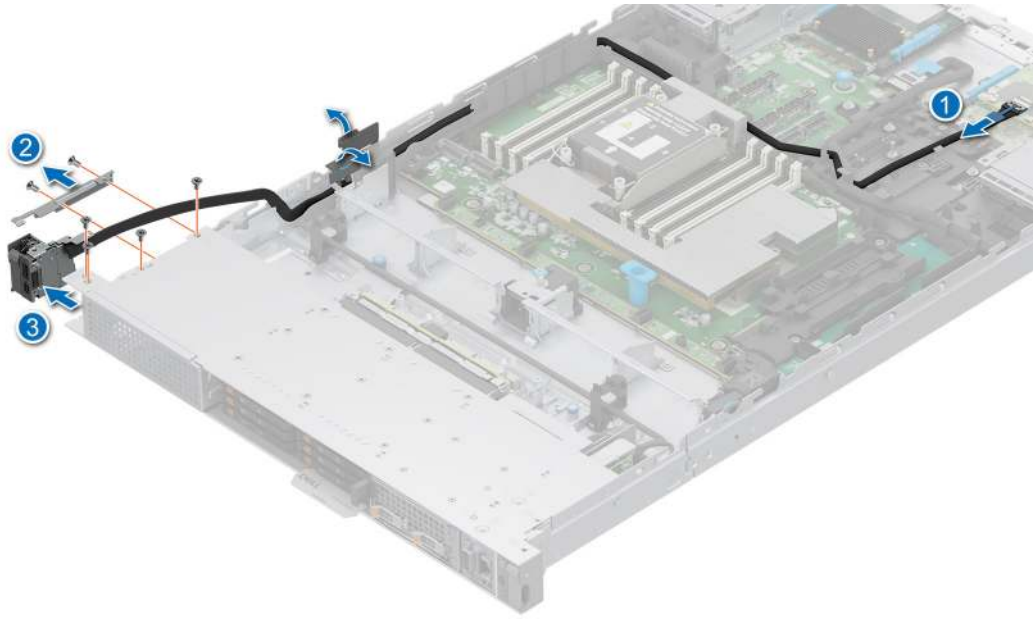

Figure 235. Removing the KVM left control panel

5. Disconnect the control panel cable from the connector on the HPM board.

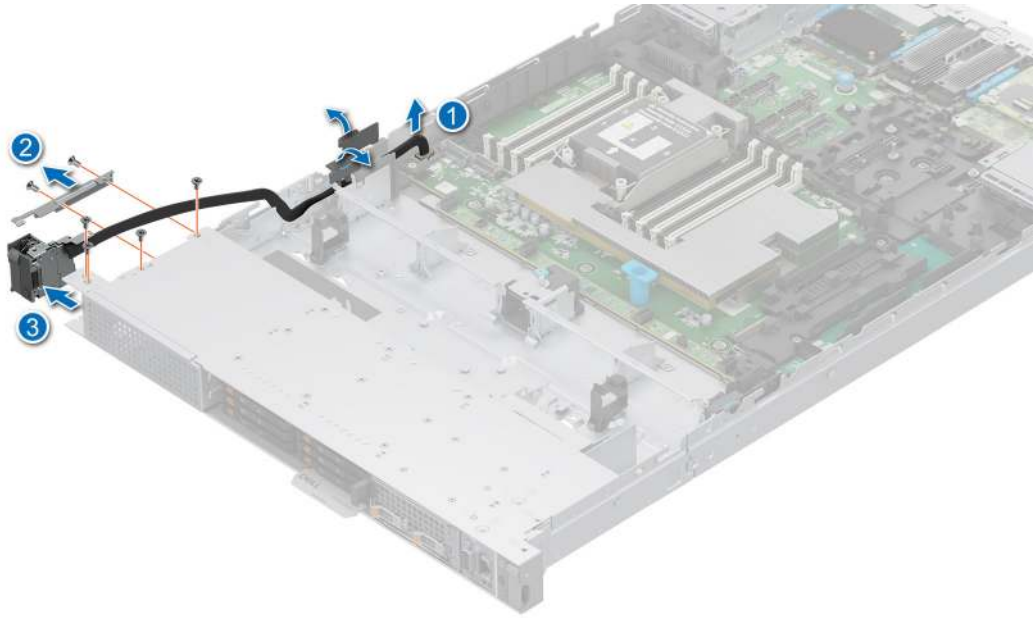

Figure 236. Removing the Quick Sync left control panel

Next steps

1. Replace the KVM/Quick Sync left control panel.

Installing the Left Control Panel (LCP)- Secondary KVM/Quick Sync

Prerequisites

1. Follow the safety guidelines listed in the Safety instructions.
2. Follow the procedure listed in the Before working inside your system.

3. Remove the drive backplane cover.

Steps

1. Align and slide the KVM/Quick Sync left control panel in the slot on the system.
2. Route the KVM/Quick Sync left control panel cable through the side wall of the system.

   NOTE: Route the cable properly to prevent the cable from being pinched or crimped.

3. Align and slide the KVM/Quick Sync left control panel cable cover in the slot on the system.
4. Connect the KVM/Quick Sync left control panel cable to the connector on the HPM/Attic board .
5. Using the Phillips 1 screwdriver, tighten the screws to secure the KVM/Quick Sync left control panel and the cable cover to the system.

   NOTE: The numbers on the image do not depict the exact steps. The numbers are for representation of sequence.

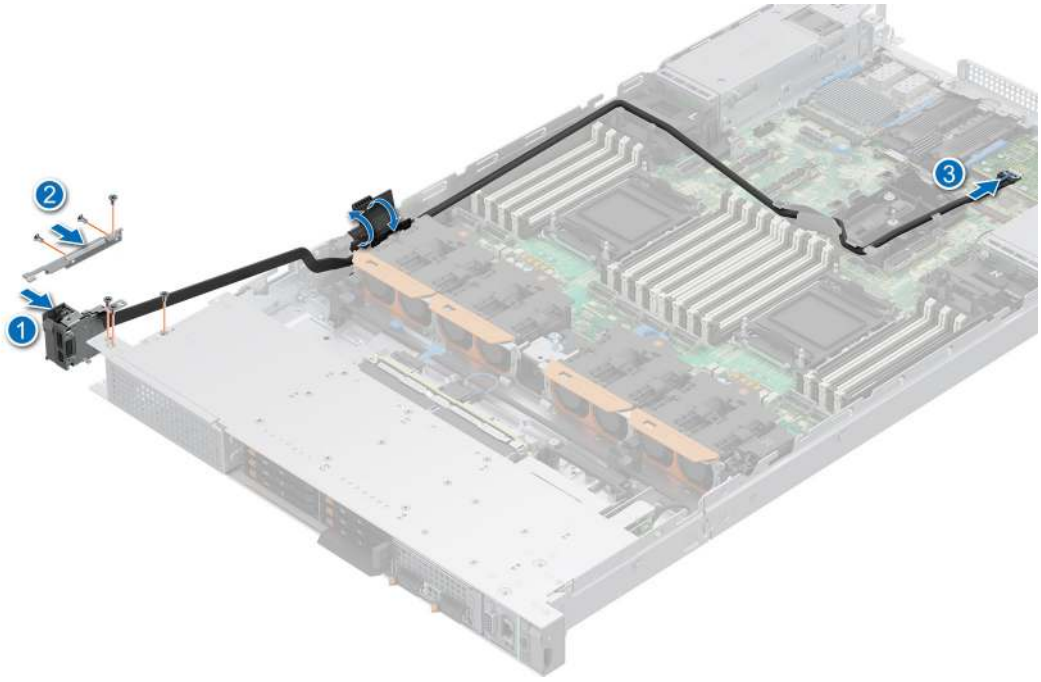

Figure 237. Installing the KVM left control panel

6. Connect the control panel cable from the connector on the HPM board.

Figure 238. Installing the Quick Sync left control panel

Next steps

1. Install the drive backplane cover.
2. Follow the procedure listed in After working inside your system.

9

Upgrade Kits

The table lists the available After Point Of Sale [APOS] kits.

Table 90. Upgrade kits

Kits	Related links to service instructions
Memory	See Installing a memory module
SSD	See Installing a drive
Processor	See Installing a processor
Power supplies	See Installing a power supply unit
Cables	See Cable routing

Topics:

- Processor upgrade kit components
- BOSS-N1 DCHMS module kit
- M.2 Interposer kit
- PERC module kit

Processor upgrade kit components

The system supports only one processor.

Before you begin the installation or removal process, follow the safety guidelines and before working inside the system instructions.

Table 91. Processor upgrade kit components matrix

System configuration	CPU	Air Shroud	Heatsink	FAN
8 x EDSFF E3.S drives	1	1 x Remote air shroud for remote heatsink	1 x Remote heatsink for CPU TDP > 250 W	4 x VHP fan for CPU TDP > 250 W
		1 x Extended air shroud for extended heatsink	1 x Extended heatsink for CPU TDP <= 250 W	4 x STD fan for CPU TDP <= 250 W
8 x 2.5 - inch SATA/ NVMe Drives	1	1 x Remote air shroud for remote heatsink	1 x Remote heatsink for CPU TDP > 250 W	4 x VHP fan for CPU TDP > 250 W
		1 x Extended air shroud for extended heatsink	1 x Extended heatsink for CPU TDP <= 250 W	4 x STD fan for CPU TDP <= 250 W
10 x 2.5 - inch SATA drives with 4 universal slots	1	1 x Remote air shroud for remote heatsink	1 x Remote heatsink for CPU TDP > 225 W	4 x VHP fan for CPU TDP > 225 W
		1 x Extended air shroud for extended heatsink	1 x Extended heatsink for CPU TDP <= 225 W	4 x STD fan for CPU TDP <= 225 W
4 x 3.5 - inch SATA drives with 2 x EDSFF E3.S rear drives	1	1 x Remote air shroud for remote heatsink	1 x Remote heatsink for CPU TDP > 225 W	4 x VHP fan for CPU TDP > 225 W
		1 x Extended air shroud for extended heatsink	1 x Extended heatsink for CPU TDP <= 225 W	4 x STD fan for CPU TDP <= 225 W
16 x EDSFF E3.S drives	1	1 x Remote air shroud for remote heatsink	1 x Remote heatsink for CPU TDP > 225 W	4 x VHP fan for CPU TDP > 225 W

Table 91. Processor upgrade kit components matrix (continued)

System configuration	CPU	Air Shroud	Heatsink	FAN
		1 x Extended air shroud for extended heatsink	1 x Extended heatsink for CPU TDP <= 225 W	4 x STD fan for CPU TDP <= 225 W
8 x EDSFF E3.S drives	1	1 x Remote air shroud for remote heatsink	1 x Remote heatsink for CPU TDP > 225 W	4 x VHP fan for CPU TDP > 225 W
		1 x Extended air shroud for extended heatsink	1 x Extended heatsink for CPU TDP <= 225 W	4 x STD fan for CPU TDP <= 225 W

For installation procedures of the Heatsink and Processor see: Processor and heat sink section.

NOTE: The install procedure for the remote and extended heatsinks are the same. The remote heatsink has five captive screws to be secured whereas the extended heatsink has only four.

Processor upgrade guidelines

Procedure to clear NVRM and switch between Intel® Xeon® E-Core processor and Intel® Xeon® P-core processor

1. Before the processor replacement, ensure that the system has been upgraded to the latest BIOS, iDRAC, and FPGA version. See Processor specifications for more details.
2. Power off the system and follow the below steps to clear the NVRAM
   a. Remove the power cords from all the power supply units.
   b. Remove the system cover, air shrouds, and all the rear risers (if applicable).
   c. Replace the Intel® Xeon® E-Core processor with the Intel® Xeon® P-core processor. For processor installation, see Processor and heat sink.
   d. Toggle the DIP switch 1 to 'ON' state as shown below. For the DIP switch location on the HPM board see, HPM board jumpers and connectors .

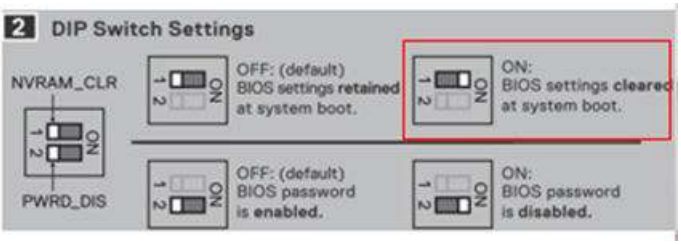

Figure 239. Image showing the 'ON' state

   e. Replace the system cover, the air shrouds, and all the rear risers (if applicable).
   f. Connect the power cords to the power supply units, and power on the system.
   g. When the system displays the **UEFI0033** message on the BIOS post screen as below, power off the system and disconnect the power cords from the all the power supply units.

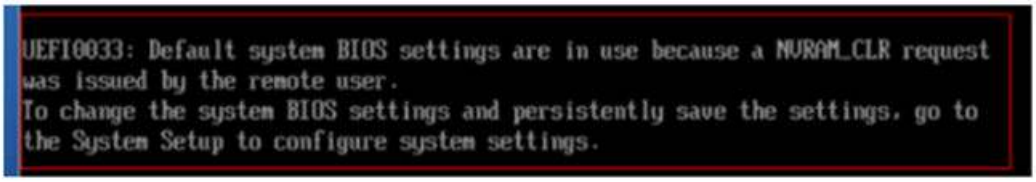

Figure 240. BIOS POST screen

   h. Remove the system cover, air shrouds, and all the rear risers (if applicable).
   i. Toggle the DIP switch 1 to “Off” state as shown below. For the DIP switch location on the HPM board see HPM board jumpers and connectors .

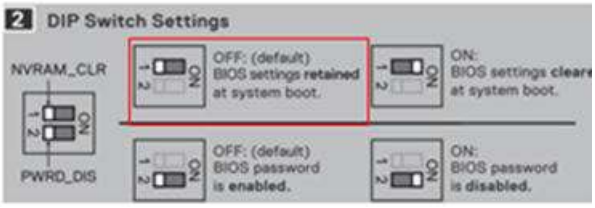

Figure 241. Image showing the 'OFF' state

j. Replace the system cover, the air shrouds, and all the rear risers (if applicable).
k. Connect the power cords to all the power supply units, power on the system and boot normally.

NOTE: The process is the same when replacing an Intel® Xeon® P-Core processor with an Intel® Xeon® E-Core processor.

BOSS-N1 DCHMS module kit

The BOSS-N1 DCHMS module supports up to two M.2 NVMe SSDs. On the PowerEdge R470 BOSS-N1 DCHMS modules are supported at the front and rear.

Before you begin the installation or removal process, follow the safety guidelines and before working inside the system instructions.

Table 92. BOSS-N1 DCHMS module kit components - Front

Components in kit	R470 (quantity)
BOSS-N1 DCHMS controller card module	1
BOSS-N1 DCHMS card carrier	2
BOSS-N1 DCHMS front tray	1
M.2 NVMe SSD	2
M.2 NVMe SSD capacity label	2
BOSS-N1 DCHMS card carrier blank	1
BOSS-N1 DCHMS PCIe cable with holder	1

Table 93. BOSS-N1 DCHMS module kit components - Rear

Components in kit	R470 (quantity)
BOSS-N1 DCHMS controller card module	1
BOSS-N1 DCHMS card carrier	2
M.2 NVMe SSD	2
M.2 NVMe SSD capacity label	2
BOSS-N1 DCHMS card carrier blank	1

For installation procedures of the BOSS-N1 DCHMS modules see: Optional BOSS-N1 DC-MHS module section.

NOTE: See cable routing section, for more information about connecting the BOSS cables to HPM board connectors.

M.2 Interposer kit

The M.2 interposer module supports up to two M.2 NVMe SSDs. On the PowerEdge R470 M.2 Interposer modules are supported at the front and rear.

Before you begin the installation or removal process, follow the safety guidelines and before working inside the system instructions.

Table 94. M.2 Interposer module kit components - Front

Components in kit	R470 (quantity)
M.2 Interposer controller card module	1
M.2 Interposer front tray	1
M.2 NVMe SSD	1 or 2
M.2 NVMe SSD capacity label	1 or 2
M.2 Interposer PCIe cable with holder	1

Table 95. M.2 Interposer module kit components - Rear

Components in kit	R470 (quantity)
M.2 Interposer controller card module	1
M.2 NVMe SSD	1 or 2
M.2 NVMe SSD capacity label	1 or 2

For installation procedures of the BOSS-N1 DCHMS modules see: Optional M.2 Interposer board section.

NOTE: See cable routing section, for more information about connecting the cables to HPM board connectors.

PERC module kit

Before you begin the installation or removal process, follow the safety guidelines and before working inside the system instructions.

Table 96. PERC module kit components - Front

Components in kit	R470 (quantity)
Tray	1
H965i Front	1
Shroud	1
Screw 3 x 8.5 mm	4
PCIE cable	1
PERC cable	2
Power cable	2

Table 97. PERC upgrade Kit cable connections

Backplane configuration	Riser configuratio	Upgrade from:	Upgrade to:	Disconnect and remove card or cables from the connector (cable marking):	Replace with the card or cables (cable marking):
8 x 2.5-inch NVMe	RC 0	Onboard PCIe	H965i front	• PCIe cable 1 (HPM_SL1/SL2 – BP_DST_PA1/ BP_DST • PCIe cable 2 (HPM_SL3/ SL4 – BP_DST_PA2/ BP_DST_PB2)	• Add H965i card • PCIe cable1 (HPM_SL1/SL2 – CTRL_DST_PA 1/ CTRL_DST_PB 1) • PERC cable 1 (CTRL_SRC_S

Table 97. PERC upgrade Kit cable connections (continued)

Backplane configuration	Riser configuratio	Upgrade from:	Upgrade to:	Disconnect and remove card or cables from the connector (cable marking):	Replace with the card or cables (cable marking):
					A1_PA1 – BP_DST_PA1/ BP_DST_PB1) • PERC cable 2 (CTRL_SRC_PB1 – BP_DST_PA2/ BP_DST_PB2) • PERC power cable (CTRL_PWR – BP_PWR_CTRL)
8 x 2.5-inch NVMe	RC 6	Onboard PCIe	H965i front	• PCIe cable 1 (HPM_SL1/SL2 – BP_DST_PA1/ BP_DST • PCIe cable 2 (HPM_SL3/ SL4 – BP_DST_PA2/ BP_DST_PB2)	• Add H965i card • PCIe cable1 (HPM_SL1/SL2 – CTRL_DST_PA1/ CTRL_DST_PB1) • PERC cable 1 (CTRL_SRC_SA1_PA1 – BP_DST_PA1/ BP_DST_PB1) • PERC cable 2 (CTRL_SRC_PB1 – BP_DST_PA2/ BP_DST_PB2) • PERC power cable (CTRL_PWR – BP_PWR_CTRL)
8 x 2.5-inch NVMe	RC 0	Onboard PCIe	H365i front	• PCIe cable 1 (HPM_SL1/SL2 – BP_DST_PA1/ BP_DST • PCIe cable 2 (HPM_SL3/ SL4 – BP_DST_PA2/ BP_DST_PB2)	• Add H365i card • PCIe cable1 (HPM_SL1 CTRL_DST_PA1) • PERC cable 1 (CTRL_SRC_SA1_PA1 – BP_DST_PA1/ BP_DST_PB1) • PERC cable 2 (CTRL_SRC_PB1 – BP_DST_PA2/ BP_DST_PB2) • PERC power cable (CTRL_PWR –

Table 97. PERC upgrade Kit cable connections (continued)

Backplane configuration	Riser configuratio	Upgrade from:	Upgrade to:	Disconnect and remove card or cables from the connector (cable marking):	Replace with the card or cables (cable marking):
					BP_PWR_CTRL)
8 x 2.5-inch NVMe	RC 0	Onboard PCIe	H365i front	• PCIe cable 1 (HPM_SL1/SL2 – BP_DST_PA1/ BP_DST • PCIe cable 2 (HPM_SL3/ SL4 – BP_DST_PA2/ BP_DST_PB2)	• Add H365i card • PCIe cable1 (HPM_SL1 CTRL_DST_PA 1) • PERC cable 1 (CTRL_SRC_SA1_PA1 – BP_DST_PA1/ BP_DST_PB1) • PERC cable 2 (CTRL_SRC_PB1 – BP_DST_PA2/ BP_DST_PB2) • PERC power cable (CTRL_PWR – BP_PWR_CTRL)
8 x 2.5-inch NVMe	RC 0, RC 6, RC 8	H365i front	H965i front	• PCIe cable1 (HPM_SL1 CTRL_DST_PA 1)	• Add H965i card • PCIe cable1 (HPM_SL1/SL2 – CTRL_DST_PA 1/ CTRL_DST_PB 1) • PERC cable 1 (CTRL_SRC_SA1_PA1 – BP_DST_PA1/ BP_DST_PB1) • PERC cable 2 (CTRL_SRC_PB1 – BP_DST_PA2/ BP_DST_PB2) • PERC power cable (CTRL_PWR – BP_PWR_CTRL)
8 x 2.5-inch SATA	RC 6, RC 8	H365i front	H965i front	• PCIe cable1 (HPM_SL1 CTRL_DST_PA 1)	• Add H965i card • PCIe cable1 (HPM_SL1/SL2 – CTRL_DST_PA 1/ CTRL_DST_PB 1)

Table 97. PERC upgrade Kit cable connections (continued)

Backplane configuration	Riser configuratio	Upgrade from:	Upgrade to:	Disconnect and remove card or cables from the connector (cable marking):	Replace with the card or cables (cable marking):
					• PERC cable 2 (CTRL_SRC_PB1 – BP_DST_PA2/ BP_DST_PB2) • PERC Cable (BP_DST_SA1- BP_DST_SA1/ BP_DST_SB1 • PERC power cable (CTRL_PWR – BP_PWR_CTRL)
10 x 2.5-inch SATA with 4 Universal ports	RC 6	H365i front	H965i front	• PCIe cable1 (HPM_SL1 CTRL_DST_PA1)	• Add H965i card • PCIe cable1 (HPM_SL1/SL2 – CTRL_DST_PA1/ CTRL_DST_PB1) • PERC cable 2 (CTRL_SRC_PB1 – BP_DST_PA2/ BP_DST_PB2) • PERC Cable (BP_DST_SA1- BP_DST_SA1/ BP_DST_SB1 • PERC power cable (CTRL_PWR – BP_PWR_CTRL)
10 x 2.5-inch SATA with 4 Universal ports	RC 7	H365i front	H965i front	• PCIe cable1 (HPM_SL1 CTRL_DST_PA1)	• Add H965i card • PCIe cable1 (HPM_SL1/SL2 – CTRL_DST_PA1/ CTRL_DST_PB1) • PCIe cable (HPM_SL1 - CTRL_DST_PA1) • PERC cable (CTRL_SRC_SA1_PA1 - BP_DST_SA1) • PERC cable 2 (CTRL_SRC_PB1 –

Table 97. PERC upgrade Kit cable connections (continued)

Backplane configuration	Riser configuratio	Upgrade from:	Upgrade to:	Disconnect and remove card or cables from the connector (cable marking):	Replace with the card or cables (cable marking):
					BP_DST_PA2/ BP_DST_PB2) ● PCIe cable (HPM_SL3 - BP_DST_PB2) ● PERC cable (CTRL_SRC_SB1_PB1- BP_DST_SB1) ● PCIe cable (HPM_SL4 - BP_DST_PA3) ● PERC power cable (CTRL_PWR – BP_PWR_CTRL)

For installation procedures of the PERC modules see: PERC cards section.

NOTE: See cable routing section,for more information on connecting the PERC cables to HPM board connectors.)

10

System diagnostics and indicator codes

The diagnostic indicators on the system front panel display system status during system startup.

Topics:

- Power LED indicators
- System health and system ID indicator codes
- iDRAC Direct LED indicator codes
- iDRAC Quick Sync 2 indicator codes
- NIC indicator codes
- Power supply unit indicator codes
- Drive indicator codes
- Using system diagnostics

Power LED indicators

NOTE: The indicators display solid amber if any error occurs.

Figure 242. Power LED indicators

Table 98. Power button LED

Power button LED indicator code	Condition
Off	System is not operating or idle in standby power mode regardless of the power supply available.
On	System is operating, one or more of the non-standby power supply units are active.
Slowly blinking	System is performing powering on sequence, and is still booting.

System health and system ID indicator codes

The system health and system ID indicator is located on the left control panel of the system.

Figure 243. System health and system ID indicator

Table 99. System health and system ID indicator codes

System health and system ID indicator code	Condition
Solid blue	Indicates that the system is powered on, is healthy, and system ID mode is not active. Press the system health and system ID button to switch to system ID mode.
Blinking blue	Indicates that the system ID mode is active. Press the system health and system ID button to switch to system health mode.
Solid amber	Indicates that the system is in fail-safe mode. If the problem persists, see the Getting help section.
Blinking amber	Indicates that the system is experiencing a fault. Check the System Event Log for specific error messages. EEMI guide

iDRAC Direct LED indicator codes

The iDRAC Direct LED indicator lights up to indicate that the port is connected and is being used as a part of the iDRAC subsystem.

You can configure iDRAC Direct by using a USB to micro USB (type AB) cable, which you can connect to your laptop or tablet. Cable length should not exceed 3 feet (0.91 meters). Performance could be affected by cable quality. The following table describes iDRAC Direct activity when the iDRAC Direct port is active:

Table 100. iDRAC Direct LED indicator codes

iDRAC Direct LED indicator code	Condition
Solid green for two seconds	Indicates that the laptop or tablet is connected.
Blinking green (on for two seconds and off for two seconds)	Indicates that the laptop or tablet connected is recognized.
LED Indicator off	Indicates that the laptop or tablet is unplugged.

iDRAC Quick Sync 2 indicator codes

iDRAC Quick Sync 2 module (optional) is located on the left control panel front IO panel of the system.

Table 101. iDRAC Quick Sync 2 indicators and descriptions

iDRAC Quick Sync 2 indicator code	Condition	Corrective action
Off (default state)	Indicates that the iDRAC Quick Sync 2 feature is powered off. Press the iDRAC Quick Sync 2 button to power on the iDRAC Quick Sync 2 feature.	If the LED fails to power on, reseat the left control panel flex cable and check. If the problem persists, see the Getting help section.
Solid white	Indicates that iDRAC Quick Sync 2 is ready to communicate. Press the iDRAC Quick Sync 2 button to power off.	If the LED fails to power off, restart the system. If the problem persists, see the Getting help section.
Blinks white rapidly	Indicates data transfer activity.	If the indicator continues to blink indefinitely, see the Getting help section.
Blinks white slowly	Indicates that firmware update is in progress.	If the indicator continues to blink indefinitely, see the Getting help section.
Blinks white five times rapidly and then powers off	Indicates that the iDRAC Quick Sync 2 feature is disabled.	Check if iDRAC Quick Sync 2 feature is configured to be disabled by iDRAC. If the problem persists, see the Getting help section. PowerEdge manuals or *Dell OpenManage Server Administrator User's Guide* at OpenManage Manuals.
Solid amber	Indicates that the system is in fail-safe mode.	Restart the system. If the problem persists, see the Getting help section.
Blinking amber	Indicates that the iDRAC Quick Sync 2 hardware is not responding properly.	Restart the system. If the problem persists, see the Getting help section.

NIC indicator codes

Each NIC on the back of the system has indicators that provide information about the activity and link status. The activity LED indicator indicates if data is flowing through the NIC, and the link LED indicator indicates the speed of the connected network.

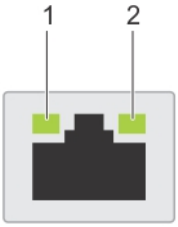

Figure 244. NIC indicator codes

1. Link LED indicator
2. Activity LED indicator

Table 102. NIC indicator codes

NIC indicator codes	Condition
Link and activity indicators are off.	Indicates that the NIC is not connected to the network.
Link indicator is green, and activity indicator is blinking green.	Indicates that the NIC is connected to a valid network at its maximum port speed, and data is being sent or received.
Link indicator is amber, and activity indicator is blinking green.	Indicates that the NIC is connected to a valid network at less than its maximum port speed, and data is being sent or received.
Link indicator is green, and activity indicator is off.	Indicates that the NIC is connected to a valid network at its maximum port speed, and data is not being sent or received.
Link indicator is amber, and activity indicator is off.	Indicates that the NIC is connected to a valid network at less than its maximum port speed, and data is not being sent or received.
Link indicator is blinking green, and activity is off.	Indicates that the NIC identity is enabled through the NIC configuration utility.

Power supply unit indicator codes

AC and DC power supply units (PSUs) have an illuminated translucent handle that serves as an indicator. The indicator shows if power is present or if a power fault has occurred.

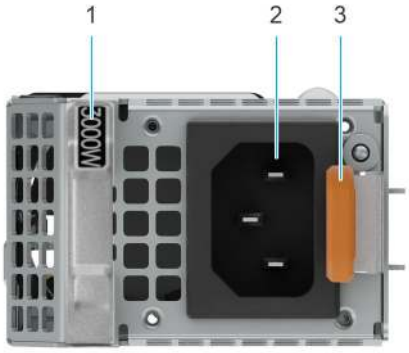

Figure 245. AC PSU status indicator

1. AC PSU handle
2. Socket
3. Release latch

Table 103. AC and DC PSU status indicator codes

Power indicator codes	Condition
Green	Indicates that a valid power source is connected to the PSU and the PSU is operational.
Blinking amber	Indicates an issue with the PSU.
Not powered on	Indicates that the power is not connected to the PSU.
Blinking green	Indicates that the firmware of the PSU is being updated. **CAUTION: Do not disconnect the power cord or unplug the PSU when updating firmware. If firmware update is interrupted, the PSUs will not function.**
Blinking greens and powers off	When hot-plugging a PSU, it blinks green five times at a rate of 4 Hz and powers off. This indicates a PSU mismatch due to efficiency, feature set, health status, or supported voltage. **CAUTION: If two PSUs are installed, both the PSUs must have the same type of label; for example,**

Table 103. AC and DC PSU status indicator codes (continued)

Power indicator codes	Condition
	Extended Power Performance (EPP) label. Mixing PSUs from previous generations of PowerEdge servers is not supported, even if the PSUs have the same power rating. This results in a PSU mismatch condition or failure to power on the system. **CAUTION: If two PSUs are used, they must be of the same type and have the same maximum output power.** **CAUTION: When correcting a PSU mismatch, replace the PSU with the blinking indicator. Swapping the PSU to make a matched pair can result in an error condition and an unexpected system shutdown. To change from a high output configuration to a low output configuration or vice versa, you must power off the system.** **CAUTION: AC PSUs support both 240 V and 120 V input voltages with the exception of Titanium PSUs, which support only 240 V. When two identical PSUs receive different input voltages, they can output different wattages, and trigger a mismatch.**

Drive indicator codes

The LEDs on the drive carrier indicate the state of each drive. SAS/SATA drive carrier has two LEDs: an activity LED (green) and a status LED (bicolor, green/amber). The activity LED blinks whenever the drive is accessed. The LEDs on the EDSFF E3.S drive have two LEDs: an activity LED (green) and a locate/fault LED (blue/amber). The activity LED blinks whenever the drive is accessed

Figure 246. SAS/SATA Drive indicators

1. Drive activity LED indicator
2. Drive status LED indicator
3. Drive capacity label

NOTE: If the drive is in the Advanced Host Controller Interface (AHCI) mode, the status LED indicator does not power on.

NOTE: Drive status indicator behavior is managed by Storage Spaces Direct. Not all drive status indicators may be used.

Table 104. Drive indicator codes

Drive status indicator code	Condition
Blinks green twice per second	Indicates that the drive is being identified or preparing for removal.
Not powered on	Indicates that the drive is ready for removal.

Table 104. Drive indicator codes (continued)

Drive status indicator code	Condition
	NOTE: The drive status indicator remains off until all drives are initialized after the system is powered on. Drives are not ready for removal during this time.
Blinks green, amber, and then powers off	Indicates that there is an unexpected drive failure.
Blinks amber four times per second	Indicates that the drive has failed.
Blinks green slowly	Indicates that the drive is rebuilding.
Solid green	Indicates that the drive is online.
Blinks green for three seconds, amber for three seconds, and then powers off after six seconds	Indicates that the rebuild has stopped.

Figure 247. EDSFF E3.S drive indicators

1. Drive activity LED indicator
2. Drive status LED indicator
3. Drive capacity label

EDSFF E3.S drive led codes

E3.S hard drives have Green LED and Blue/Amber LED.

- Green LED shows : Drive power status , Activity
- Blue/Amber LED shows: Drive Fault, Locate

EDSFF indicator behavior

Table 105. EDSFF indicator behavior

Pattern Name	Description	Blue Element	Amber Element
Locate	This device is being identified.	ON (1 sec ON 1 sec OFF)	OFF
Fault	The device is in a fault condition.	OFF	ON (2 sec ON 1 sec OFF)
N/A	This device does not have fault or locate device.	OFF	OFF

NOTE: Locate behavior overrides Fault state.

Green LED

The green LED is driven and controlled by the device. The two functions for this LED are defined as follows:

- Power: This function indicates that the device has power and has no issues with its power regulation. Once the green LED is ON, it shall either remain ON or blink at the activity frequency unless the device determines power is no longer within its operating range.
- Activity: This function indicates if the device is being used.

Table 106. LED and device state per function for Green LED

Function/Device state	LED state
Power ON/Device is powered, no activity occurring.	ON

Table 106. LED and device state per function for Green LED (continued)

Function/Device state	LED state
Activity/Device is powered, host initiated I/O activity occurring.	4 Hz nominal blink rate
Power OFF/Device is not powered.	OFF

Using system diagnostics

If you experience an issue with the system, run the system diagnostics before contacting Dell for technical assistance. The purpose of running system diagnostics is to test the system hardware without using additional equipment or risking data loss. If you are unable to fix the issue yourself, service and support personnel can use the diagnostics results to help you solve the issue.

Dell Embedded System Diagnostics

NOTE: The Dell Embedded System Diagnostics is also known as Enhanced Pre-boot System Assessment (ePSA) diagnostics.

The Embedded System Diagnostics provide a set of options for particular device groups or devices allowing you to:

- Run tests automatically or in an interactive mode
- Repeat tests
- Display or save test results
- Run thorough tests to introduce additional test options to provide extra information about the failed device(s)
- View status messages that inform you if tests are completed successfully
- View error messages that inform you of issues encountered during testing

System diagnostic controls

Table 107. System diagnostic controls

Menu	Description
Configuration	Displays the configuration and status information of all detected devices.
Results	Displays the results of all tests that are run.
System health	Provides an overview of the system performance.
Event log	Displays a time-stamped log of test results. This displays if at least one event description is recorded.

11

Jumpers and connectors

This topic provides some basic and specific information about jumpers and switches. It also describes the connectors on the various boards in the system. Jumpers on the HPM board help to disable the system and reset the passwords. To install components and cables correctly, you must know the connectors on the HPM board.

Topics:

- HPM board jumpers and connectors
- HPM board jumper settings
- Disabling a forgotten password

HPM board jumpers and connectors

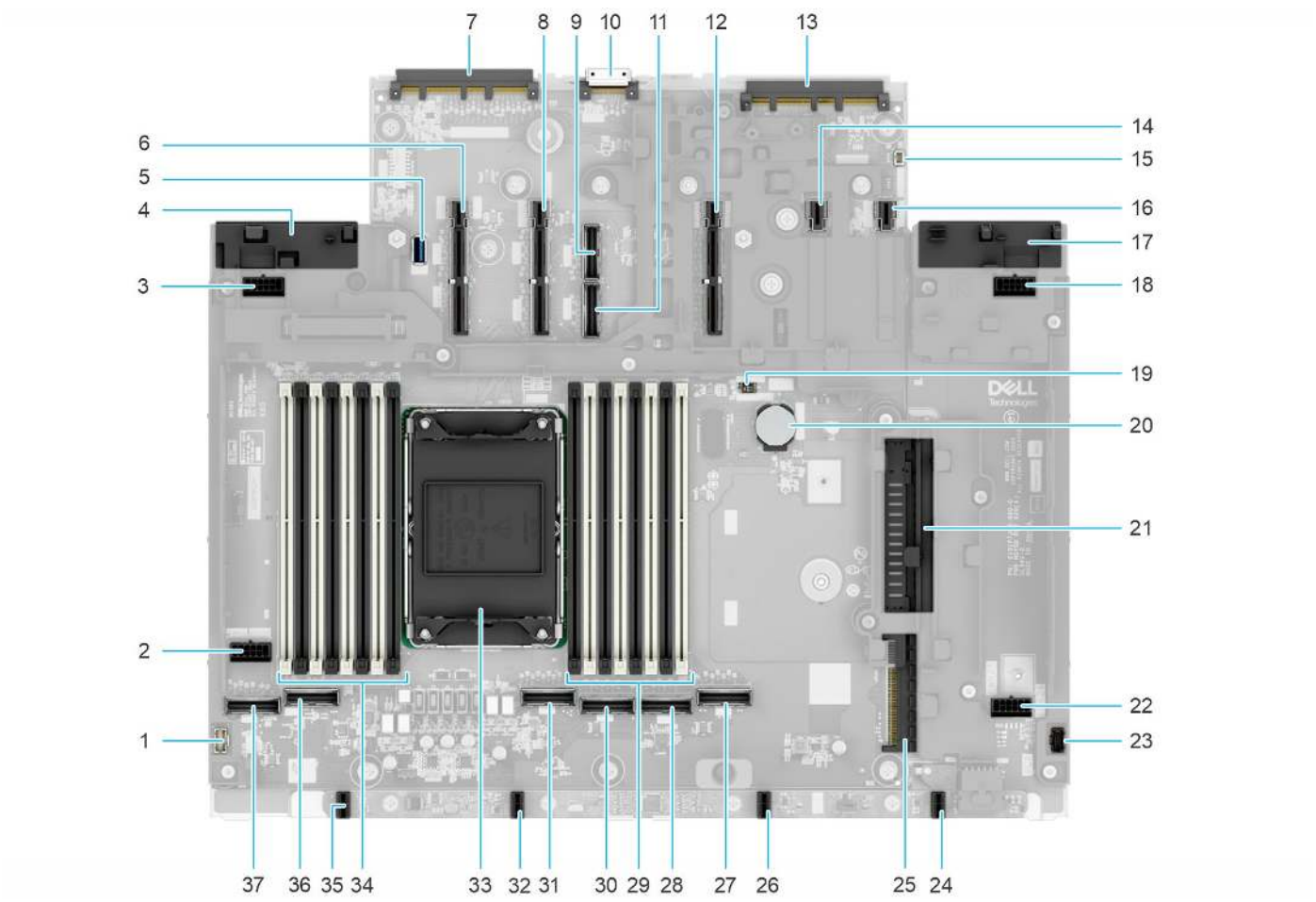

Figure 248. HPM board jumpers and connectors

Table 108. HPM board jumpers and connectors

Item	Connector
1	Left control panel connector
2	Power connector 1/2 (PWR1/PWR2)

Table 108. HPM board jumpers and connectors (continued)

Item	Connector
3	Power connector 5/6(PWR5/PWR6)
4	PSU connector 2
5	Internal USB
6	Riser connector (SL11/SL12/PWR11/PWR12)
7	OCP NIC 3.0 connector
8	Riser connector (SL13/SL14/PWR13/PWR14)
9	PCIe conector 23 (SL23_CPU0)
10	BOSS connector
11	PCIe conector 24 (SL24_CPU0)
12	Riser connector (SL15/SL16/PWR15/PWR16)
13	DC-SCM connector
14	Riser connector (PWR17/PWR18)
15	Intrusion switch connector
16	Riser connector (PWR19/PWR20)
17	PSU 1 connector
18	Power connector 23/24(PWR23/PWR24)
19	DIP switch
20	Coin cell battery
21	PIB power connector
22	Power connector 25/26(PWR25/PWR26)
23	Right control panel connector
24	Fan 4
25	PIB signal connector
26	Fan 3
27	PCIe conector 6 (SL6_CPU0)
28	PCIe conector 5 (SL5_CPU0)
29	DIMM slots
30	PCIe conector 4 (SL4_CPU0)
31	PCIe conector 3 (SL3_CPU0)
32	Fan 2
33	CPU 0
34	DIMM slots
35	Fan 1
36	PCIe conector 2 (SL2_CPU0)
37	PCIe conector 1 (SL1_CPU0)

HPM board jumper settings

For information about resetting the password jumper to disable a password, see the Disabling a forgotten password section.

Table 109. HPM board jumper settings

Jumper	Setting	Description
NVRAM_CLR	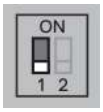	OFF (default): The BIOS settings are retained at system boot.
	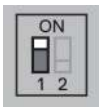	ON: The BIOS settings cleared at system boot.
PWRD_DIS		OFF (default): The BIOS password is enabled.
		ON: The BIOS password is disabled.

CAUTION: Be careful when changing the BIOS settings. The BIOS interface is designed for advanced users. Any change in the setting could prevent your system from starting correctly and you might have potential loss of data.

Disabling a forgotten password

The software security features of the system include a system password and a setup password. The password jumper enables or disables password features and clears any password(s) currently in use.

Prerequisites

CAUTION: Many repairs may only be done by a certified service technician. You should only perform troubleshooting and simple repairs as authorized in your product documentation, or as directed by the online or telephone service and support team. Damage due to servicing that is not authorized by Dell is not covered by your warranty. Read and follow the safety instructions that are shipped with your product.

Steps

1. Power off the system, and all the attached peripherals, and disconnect the system from the electrical outlet.
2. Remove the system cover.
3. Move the DIP switch (PWRD_DIS) on the HPM board from OFF position to ON position.
4. Replace the system cover.

   NOTE: The existing passwords are not disabled (erased) until the system boots the DIP switch in the ON position. . However, before you assign a new system and/or setup password, you must move the DIP switch back to OFF position

   NOTE: If you assign a new system and/or setup password with he DIP switch in ON position, the system disables the new password(s) the next time it boots.

5. Reconnect the system and all the attached peripherals.
6. Power off the system.
7. Remove the system cover.
8. Move the DIP switch (PWRD_DIS) on the HPM board from ON position to OFF position.

9. Replace the system cover.
10. Reconnect the system to the electrical outlet and power on the system, and all the attached peripherals.
11. Assign a new system and/or setup password.

12

Getting Help

Topics:

- Recycling or End-of-Life service information
- Contact Dell Technologies
- Accessing system information by using MyDell
- Receiving automated support with Secure Connect Gateway (SCG)

Recycling or End-of-Life service information

Take back and recycling services are offered for this product in certain countries. If you want to dispose of system components, visit How to Recycle and select the relevant country.

Contact Dell Technologies

Dell provides online support, mobile support, and onsite service options. If you do not have an active Internet connection, you can find Dell contact information on your invoice, packing slip, bill, or Dell product catalog. The availability of services varies depending on the country or region and product, and some services may not be available in your area. You can contact Dell for sales, technical support, or customer service issues.

Steps

1. Go to Dell Support and follow the prompts.
2. For contact details of Dell Global Technical Support, click Contact Technical Support.

Accessing system information by using MyDell

You can use the MyDell label located on the Express service tag in the front of the PowerEdge system, to access information about PowerEdge R470 system.

Prerequisites

Ensure that your smartphone or tablet has a QR code scanner installed.

The MyDell includes the following information about your system:

- How-to videos
- Reference materials, including the Installation and Service Manual, and mechanical overview.
- The system service tag to quickly access the specific hardware configuration and warranty information.
- A direct link to Dell to contact technical support and sales teams.

Steps

Go to product-specific page in PowerEdge Manuals or scan the model-specific QR code on your system using your smartphone or tablet.

Receiving automated support with Secure Connect Gateway (SCG)

Dell Secure Connect Gateway (SCG) is an optional Dell Services offering that automates technical support for your Dell server, storage, and networking devices. By installing and setting up a Secure Connect Gateway (SCG) application in your IT environment, you can receive the following benefits:

- Automated issue detection — Secure Connect Gateway (SCG) monitors your Dell devices and automatically detects hardware issues, both proactively and predictively.
- Automated case creation — When an issue is detected, Secure Connect Gateway (SCG) automatically opens a support case with Dell Technical Support.
- Automated diagnostic collection — Secure Connect Gateway (SCG) automatically collects system state information from your devices and uploads it securely to Dell. This information is used by Dell Technical Support to troubleshoot the issue.
- Proactive contact — A Dell Technical Support agent contacts you about the support case and helps you resolve the issue.

The available benefits vary depending on the Dell Service entitlement purchased for your device. For more information about Secure Connect Gateway (SCG), go to secureconnectgateway.

13

Documentation resources

This section provides information about the documentation resources for your system.

To view the document that is listed in the documentation resources table:

- From the Dell support site:
  1. Click the documentation link that is provided in the Location column in the table.
  2. Click the required product or product version.

     NOTE: To locate the model number, see the front of your system.

  3. On the Product Support page, click **Documentation**.
- Using search engines:
  - Type the name and version of the document in the search box.

Table 110. Additional documentation resources for your system

Task	Document	Location
Setting up your system	For more information about installing and securing the system into a rack, see the Rail Installation Guide included with your rail solution. For information about setting up your system, see the *Getting Started Guide* document that is shipped with your system.	PowerEdge manuals
Configuring your system	For information about the iDRAC features, configuring and logging in to iDRAC, and managing your system remotely, see the Integrated Dell Remote Access Controller User's Guide. For information about understanding Remote Access Controller Admin (RACADM) subcommands and supported RACADM interfaces, see the RACADM CLI Guide for OSM. For information about Redfish and its protocol, supported schema, and Redfish Eventing implemented in iDRAC, see the Redfish API Guide. For information about iDRAC property database group and object descriptions, see the Attribute Registry Guide.	PowerEdge manuals
	For information about installing the operating system, see the operating system documentation.	Operating System Manuals
	For information about updating drivers and firmware, see the Methods to download firmware and drivers section in this document.	Drivers
Working with the Dell PowerEdge RAID controllers (if applicable)	For information about understanding the features of the Dell PowerEdge RAID controllers (PERC), Software RAID controllers,	Storage Controller Manuals

Table 110. Additional documentation resources for your system (continued)

Task	Document	Location
	or BOSS card and deploying the cards, see the Storage controller documentation.	
Understanding event and error messages	EEMI guide	QRL
Troubleshooting your system	For information about identifying and troubleshooting the PowerEdge server issues, see the Server Troubleshooting Guide.	PowerEdge manuals