ASUS
IN SEARCH OF INCREDIBLE

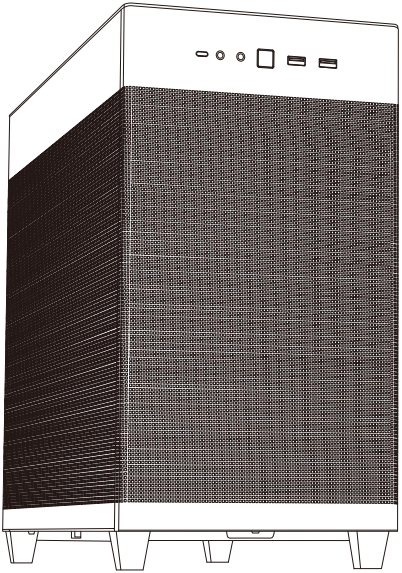

PRIME CASE AP303

User Manual

Q26367
First Edition
July 2025

Copyright © 2025 ASUSTeK Computer Inc.

All Rights Reserved.

No part of this manual, including the products and software described in it, may be reproduced, transmitted, transcribed, stored in a retrieval system, or translated into any language in any form or by any means, except documentation kept by the purchaser for backup purposes, without the express written permission of ASUSTeK Computer Inc. (“ASUS”).

Product warranty or service will not be extended if: (1) the product is repaired, modified or altered, unless such repair, modification of alteration is authorized in writing by ASUS; or (2) the serial number of the product is defaced or missing.

ASUS provides this manual “as is” without warranty of any kind, either express or implied, including but not limited to the implied warranties or conditions of merchantability or fitness for a particular purpose. In no event shall ASUS, its directors, officers, employees or agents be liable for any indirect, special, incidental, or consequential damages (including damages for loss of profits, loss of business, loss of use or data, interruption of business and the like), even if ASUS has been advised of the possibility of such damages arising from any defect or error in this manual or product.

Specifications and information contained in this manual are furnished for informational use only, and are subject to change at any time without notice, and should not be construed as a commitment by ASUS. ASUS assumes no responsibility or liability for any errors or inaccuracies that may appear in this manual, including the products and software described in it.

Products and corporate names appearing in this manual may or may not be registered trademarks or copyrights of their respective companies, and are used only for identification or explanation and to the owners’ benefit, without intent to infringe.

Contents

Accessory Kit Contents 2

Installation Guide 3

Remove the Side Panels 4

Install the Power Supply Unit (PSU) 6

Install the Cooler & RAM on the Motherboard 11

Install the I/O Shield 12

Install the Motherboard Unit 13

Attach the Front I/O Connectors 14

Install the PCI-E Card 15

Install the 3.5” / 2.5” Drives 19

Installation and Maintenance of the Dust Filters 23

Additional Information 25

CPU Cooler Height Limitation 26

Graphics Card Limitation 27

Graphics Card Placement Options 28

Fan Setup Compatibility 33

Water-cooling Radiator Options 34

Water-cooling Setup Compatibility 35

Safety Information 36

Accessory Kit Contents

配備零組件內容物 | 配备组件内容物 | Obsah sady příslušenství | Contenu du kit d'accessoires | Verpackungsinhalt des Zubehörsatzes | Accessori contenuti nel kit | アクセサリキットの内容 | 액세서리 키트 내용물 | Zawartość zestawu akcesoriów | Conteúdo do kit de acessórios | Содержимое комплекта | Contenido del kit de accesorios | Tillbehörssatsens innehåll | Aksesuar Kitinin İçindekiler | محتويات طقم الملحقات | תוכן ערכת האביזרים

A		**PSU Screws**	**x4**
B		**Motherboard / 2.5" Drive Screws / Graphics Card Bracket to Card Screws**	**x24**
C		**3.5" Drive Screws / Graphics Card Bracket to Case Screws**	**x6**
D		**Standoff Tool**	**x1**
E		**Side Panel Clips**	**x2**
F		**Cable Ties**	**x10**
G		**Vertical Graphics Card Mount**	**x1**
H		**Graphics Card Fixing Bracket**	**x1**

Installation Guide

安装指南 | 安装指南 | Instalační příručka | Guide d'installation | Installationsanleitung | Guida all'installazione | 組み立てガイド | 설치 설명서 | Instrukcja instalacji | Manual de instalação | Руководство по установке | Guía de instalación | Installationsguide | Kurulum Kılavuzu | دليل التركيب | מדריכי התקנה

1 Remove the Side Panels

移除側面板 | 移除側面板 | Sejměte boční panely | Retirer les panneaux latéraux | Entfernen der Seitenwände | Rimuovete i pannelli laterali | サイドパネルを取り外す | 측면 패널 제거 | Zdejmij panele boczne | Remover os painéis laterais | Снимите боковые панели | Quite los paneles laterales | Ta bort sidopanelerna | Yan Panelleri Çıkarın | أزل اللوحات الجانبية | הסר את הפאנלים הצדדיים

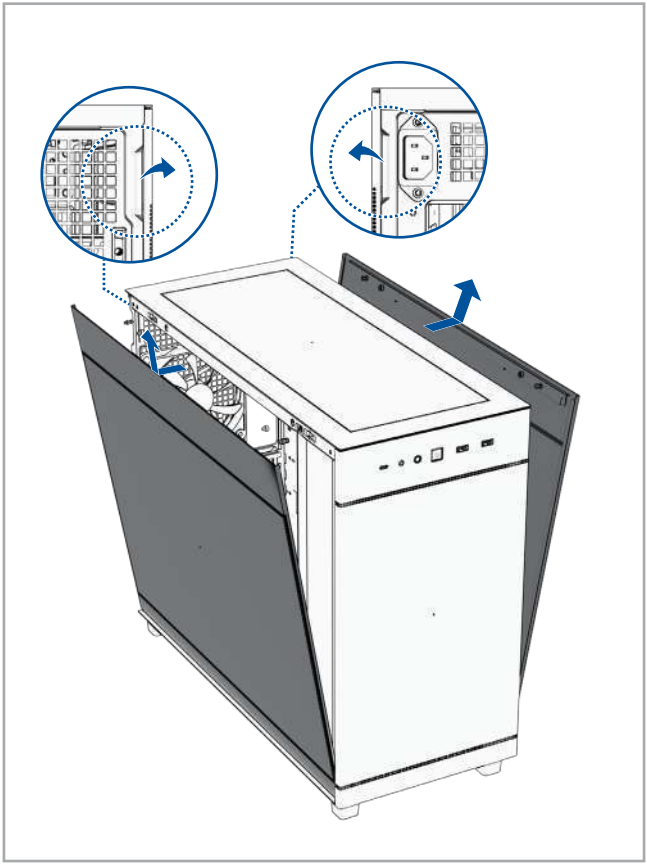

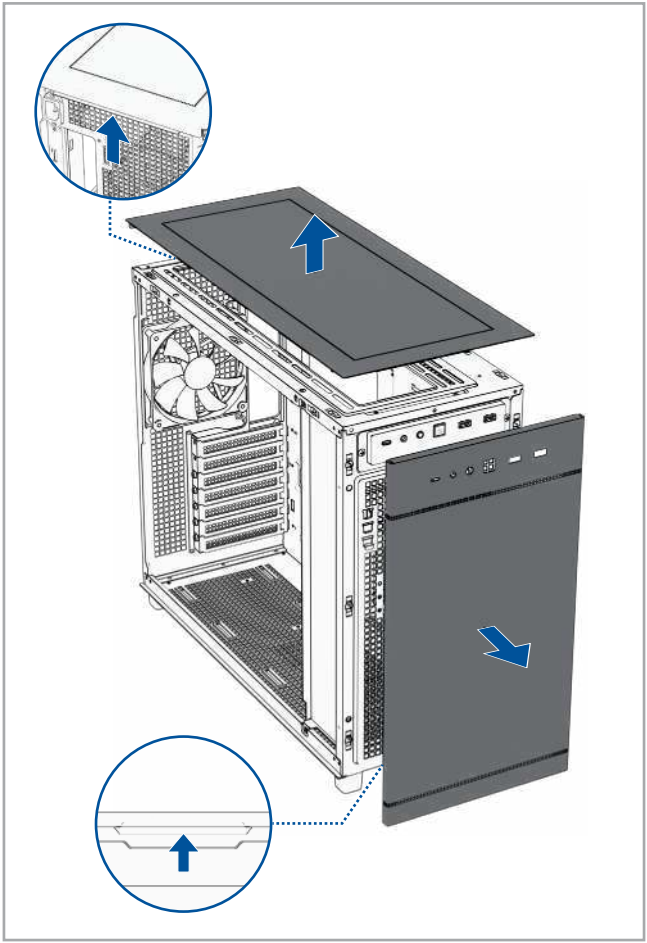

2 Install the Power Supply Unit (PSU)

安装電源供應器 | 安装电源供应器 | Nainstalujte zdroj napájení (PSU) | Installer le bloc d'alimentation | Installation des Netzteils | Installate l'alimentatore (PSU) | 電源装置を取り付ける | 전원 공급장치(PSU) 설치 | Zainstaluj zasilacz (PSU) | Instalar a fonte de alimentação (PSU) | Установите блок питания | Instalar la fuente de alimentación (PSU) | Sätt i strömförsörjningsenheten (PSU) | Güç Kaynağı Ünitesini (PSU) Takın | התקן את יחידת ספק הכח | ركّب وحدة الإمداد بالطاقة (PSU)

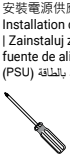

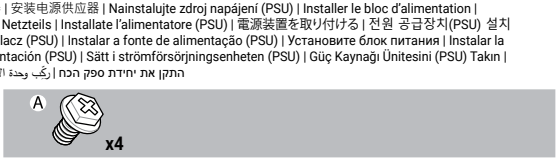

1

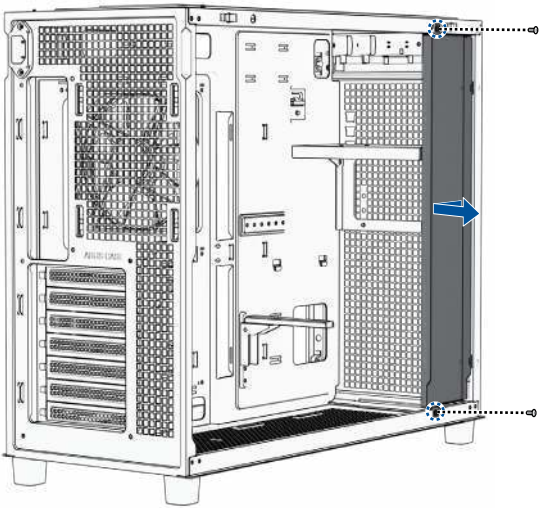

2

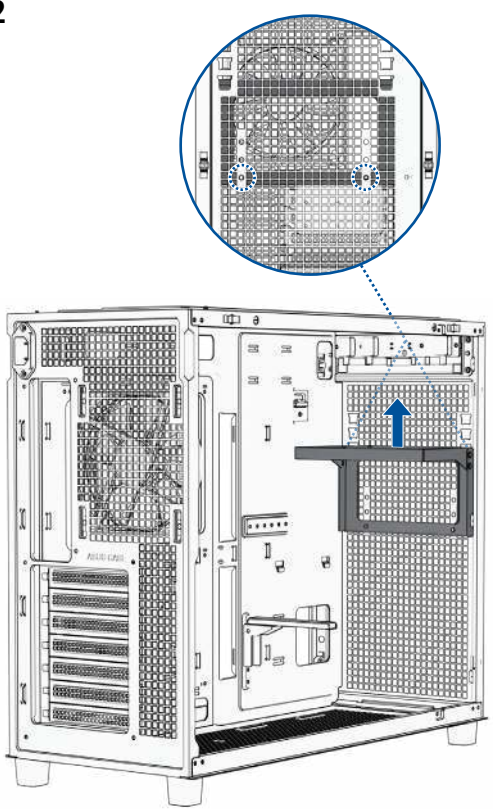

3

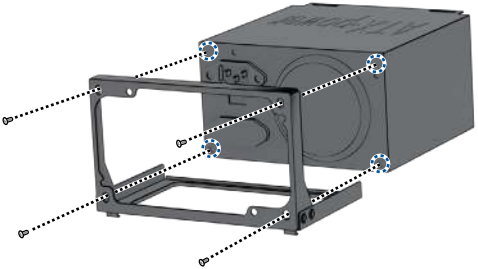

4

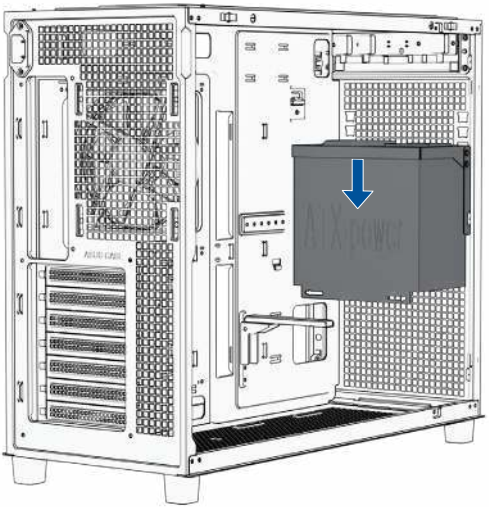

Install the PSU to the mount positions shown below according to your AIO specifications.

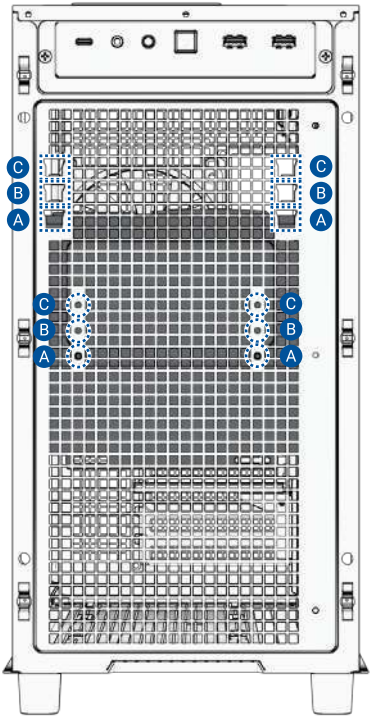

5

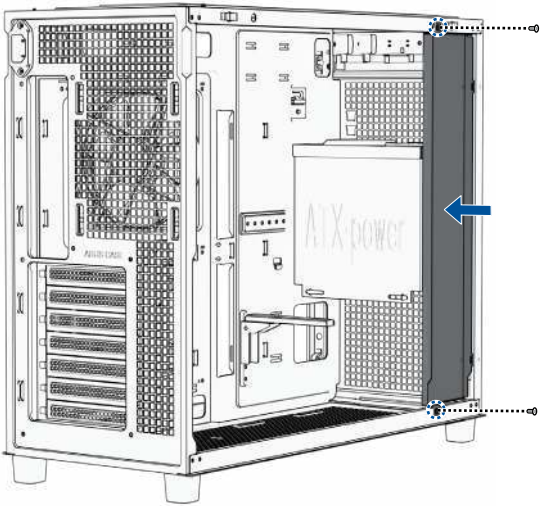

3 Install the Cooler & RAM on the Motherboard

安裝主機板散熱器和記憶體 | 安装主板散热器和内存卡 | Nainstalujte chladič a paměť RAM na základní desku | Installer le refroidisseur et la mémoire RAM sur la carte mère | Installation des Kühlers und der RAM-Module auf das Motherboard | Installate dissipatore e RAM sulla scheda madre | CPU、クーラー、メモリーをマザーボードに取り付ける | 메인보드에 쿨러 및 RAM 설치 | Zainstaluj element chłodzący i pamięć RAM na płycie głównej | Instalar o dissipador e memória RAM na placa principal | Установите на материнскую плату кулер и память | Instalar el refrigerador y la memoria RAM en la placa base | Montera kylare och RAM på moderkortet | Soğutucu ve RAM'i Anakarta Takın | ركِّب المبرد وذاكرة الرام (RAM) باللوحة الأم | התקן את הקירור ויחידות הזיכרון RAM על לוח האם

1

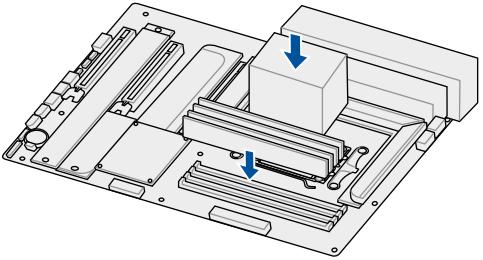

2

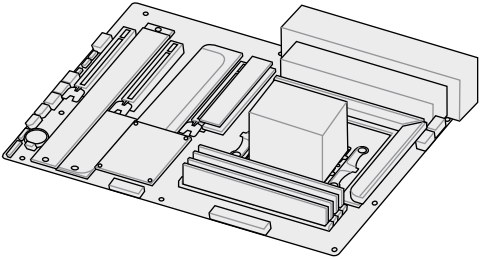

4 Install the I/O Shield

安装 I/O 擋板 | 安装 I/O 挡板 | Nainstalujte I/O štít | Installer le cache d'E/S | Installation der E/A-Blende | Installate la mascherina I/O | I/Oシールドを取り付ける | I/O 쉴드 설치 | Zainstaluj osłonę portów We/Wy | Instalar a tampa de E/S | Установите заглушку разъемов ввода-вывода | Instalar la protección de ES/ | Installera I/O-skölden | G/Ç Koruyucuyu Takın | ركّب غطاء الإدخال/ الإخراج | I/O Shield-ה את התקן

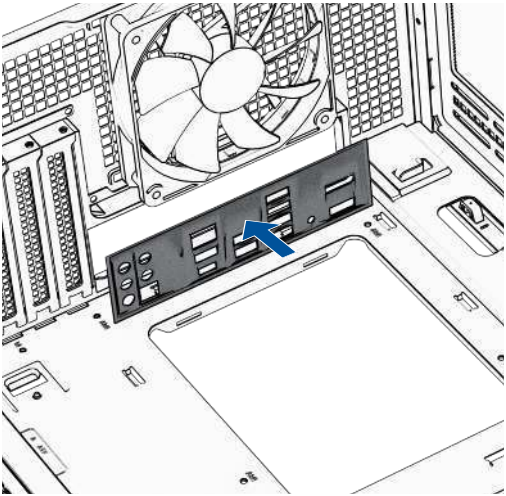

5 Install the Motherboard Unit

將主機板裝入機殼 | 将主板装入机箱 | Nainstalujte základní desku | Installer la carte mère | Installation der Motherboard-Baugruppe | Installate la scheda madre | マザーボードを取り付ける | 메인보드 유닛 설치 | Zainstaluj płytę główną | Instalar a placa principal | Установите материнскую плату | Instalar la unidad de la placa base | Installera moderkortsenheten | Anakart Ünitesini Takın | ركّب وحدة اللوحة الأم | התקן את לוח האם

6 Attach the Front I/O Connectors

連接前面板 I/O 插孔 | 连接前面板 I/O 插孔 | Připojte přední I/O konektory | Fixer les connecteurs d'E/S avants | Befestigen der vorderen E/A-Anschlüsse | Collegate i connettori di I/O frontali | フロントI/Oコネクターを取り付ける | 전면 I/O 커넥터 연결 | Zamocuj przednie złącza We/Wy | Encaixar os conectores de E/S frontais | Подключите разъемы для передней панели | Acoplar los conectores de E/S frontales | Anslut de främre I/O-kontakterna | Ön G/Ç Konektörlerini Takın | وصّل موصلات الإدخال/الإخراج الأمامية | חבר את חיבורי ה-Front I/O

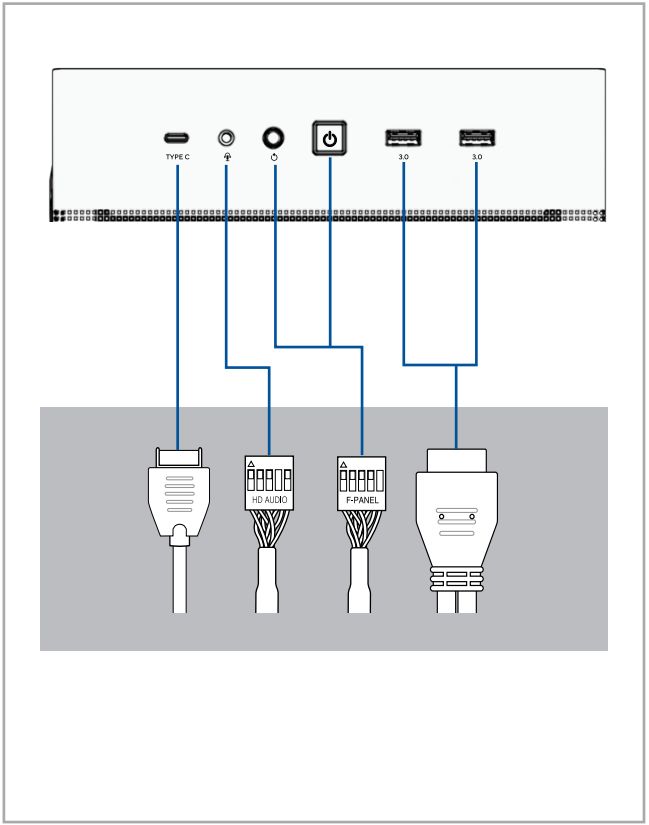

7 Install the PCI-E Card

安装 PCI-E 卡 | 安装 PCI-E 卡 | Nainstalujte PCI-E kartu | Installer la carte PCI-E | Installation der PCI-E-Karte | Installate la scheda PCI-E | 拡張カードを取り付ける | PCI-E 카드 설치 | Zainstaluj kartę PCI-E | Instalar a placa PCI-E | Установите карту PCI-E | Instalar la tarjeta PCI-E | Installera PCI-E-kortet | PCI-E Kartını Takın | PCI-E ركّب بطاقة | התקן את כרטיס ה-PCI-E

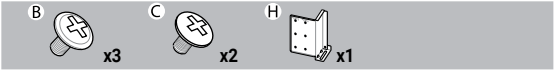

1

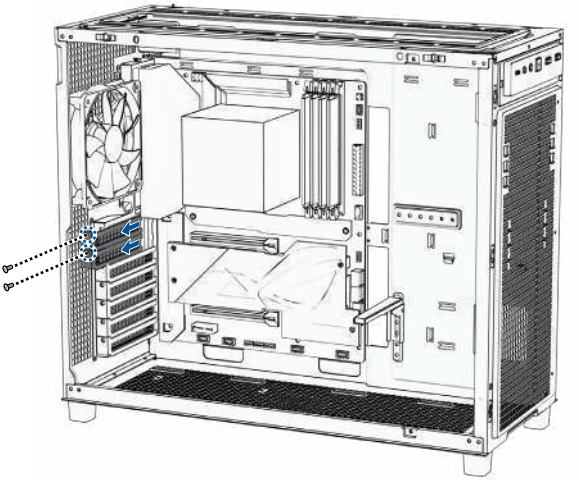

2

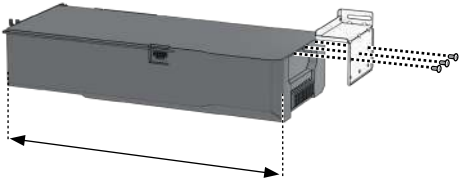

Graphics cards bracket supports graphics cards of length 310mm-360mm

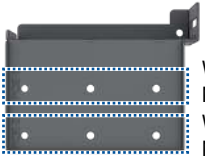

When installing graphics card to MB PCIe 1 slot

When installing graphics card to MB PCIe 2 slot

*** Graphics card bracket only supported on NVIDIA 50 series graphics cards**

3

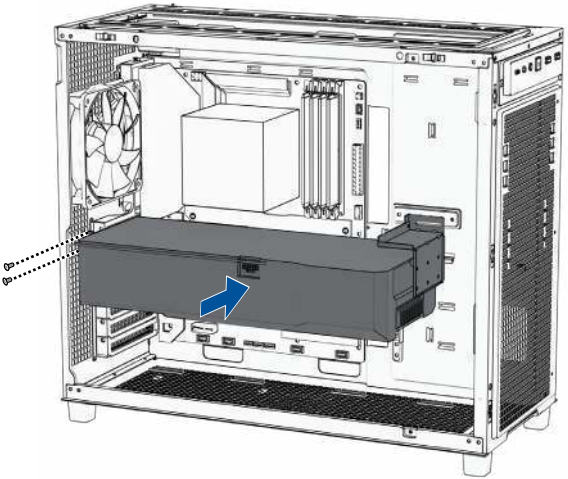

4

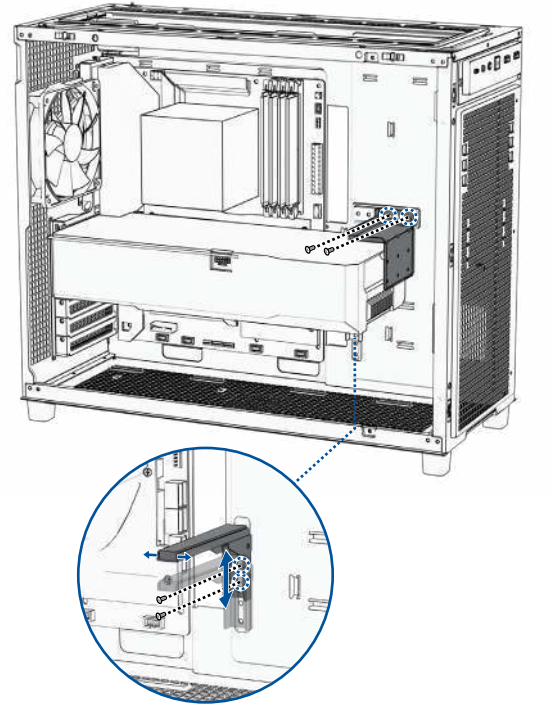

8 Install the 3.5” / 2.5” Drives

安装 3.5 / 2.5 吋硬碟 | 安装 3.5 / 2.5 英寸硬盘 | Nainstalujte 3,5”/2,5” jednotky | Installer les lecteurs 3.5”/2.5” | Installation der 3,5-Zoll-/2,5-Zoll-Laufwerke | Installate i drive 3.5”/2.5” | 3.5インチ/2.5インチ ドライブを取り付ける | 3.5”/2.5” 드라이브 설치 | Zainstaluj napędy 3,5”/2,5” | Instalar as unidades de 3,5”/2,5” | Установите 3,5/2,5-дюймовые диски | Instalar las unidades de 3,5”/2,5” | Installera 3,5”/2,5”-enheterna | 3,5”/2,5” Sürücüleri Takın | ركّب القرص الصلب مقاس ٣,٥/٢,٥ بوصة | התקן את כונן ה-3.5/"2.5

1

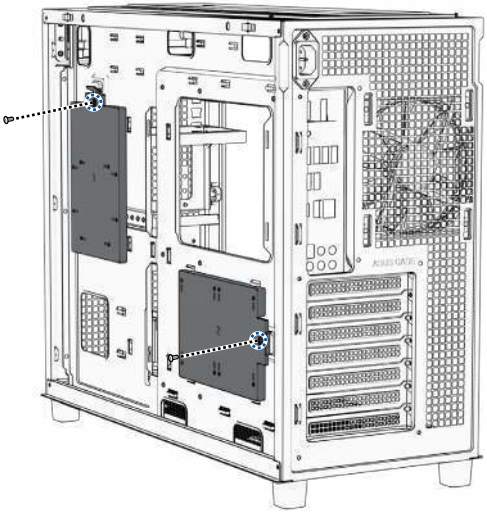

2

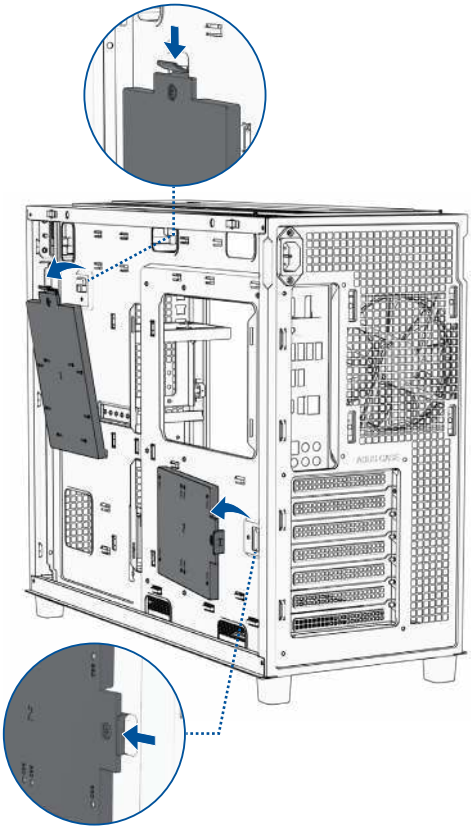

3

3.5” drives

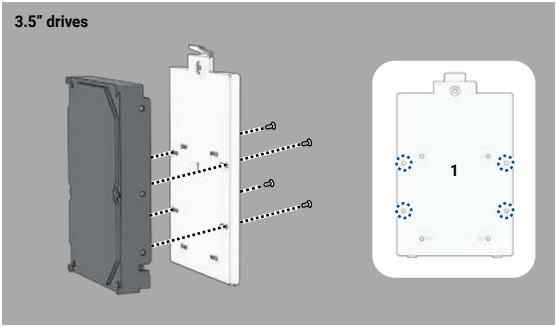

2.5” drives

A

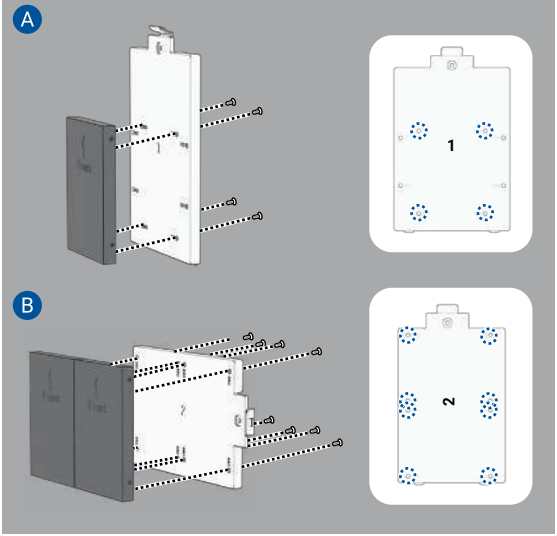

B

4

3.5” drives

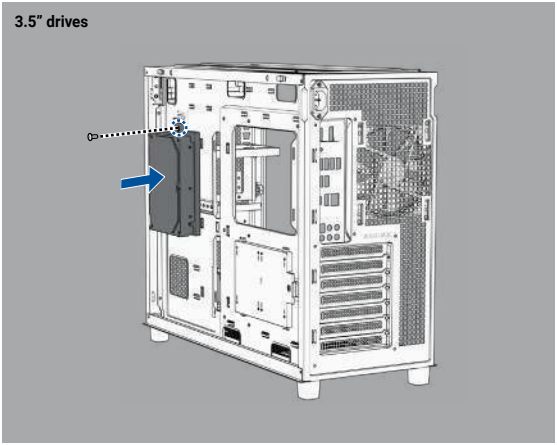

2.5” drives

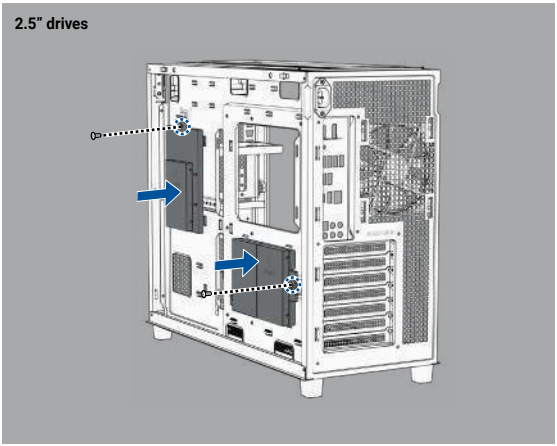

9 Installation and Maintenance of the Dust Filters

防塵網安裝及保養 | 防尘网安装及保养 | Instalace a údržba prachových filtrů | Installation et entretien des filtres à poussière | Installation und Wartung der Staubfilter | Installazione e manutenzione dei filtri antipolvere | ダストフィルターを取り付ける | 먼지 필터의 설치 및 유지보수 | Instalacja i konserwacja filtrów antykurzowych | Instalação e manutenção dos filtros de pó | Установка и обслуживание пылевых фильтров | Instalación y mantenimiento de los filtros de polvo | Installation och underhåll av dammfiltren | Toz Filtrelerinin Kurulumu ve Bakımı | تركيب وصيانة فلاتر الغبار | התקנה ותחזוק של פילטרי אבק

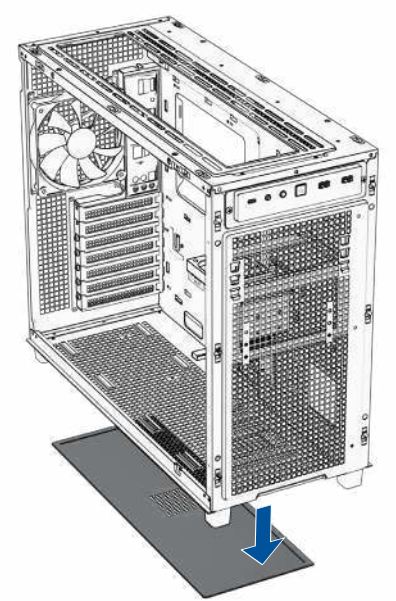

Additional Information

附加資訊 | 附加信息 | Dodatečné informace | Informations supplémentaires | Zusätzliche Informationen | Informazioni addizionali | 追加情報 | 추가 정보 | Informacje dodatkowe | Informações adicionais | Дополнительная информация | Información adicional | Ytterligare information | Ek Bilgiler | معلومات إضافية | מידע נוסף

CPU Cooler Height Limitation

CPU 散熱器高度限制 | CPU 散热器高度限制 | Výškové omezení chladiče CPU | Limitation de hauteur du refroidisseur pour processeur | Höhenbegrenzung des CPU-Kühlers | Limitazioni di altezza per il dissipatore CPU | CPUクーラーの制限 | CPU 쿨러 높이 제한 | Ograniczenie wysokości elementu chłodzącego CPU | Limitação de altura do dissipador da CPU | Ограничения для высоты процессорного кулера | Limitación de la altura del refrigerador de la CPU | Höjdbegränsning av CPU-kylare | CPU Soğutucu Yükseklik Sınırlaması | מגבלת גובה לקירור עבור מעבד | حد إرتفاع مبرد وحدة المعالجة المركزية

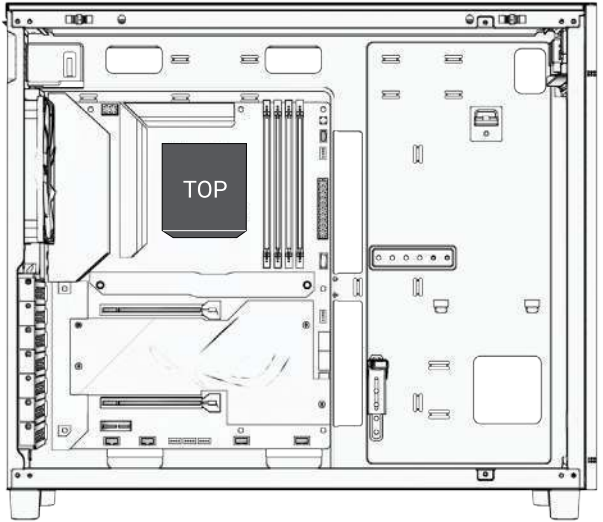

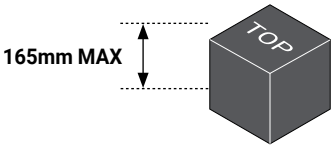

Graphics Card Limitation

顯示卡長度限制 | 显卡长度限制 | Omezení grafické karty | Limitations de la carte graphique | Beschränkungen der Grafikkarte | Limitazioni per la scheda grafica | グラフィックスカードの制限 | 그래픽 카드 제한 | Ograniczenia karty graficznej | Limitações de placas gráficas | Ограничения для видеокарты | Limitaciones de la tarjeta gráfica | Begränsningar för grafikkort | Grafik Kartı Sınırlamaları | حدود بطاقة الرسومات | מגבלת כרטיס מסך

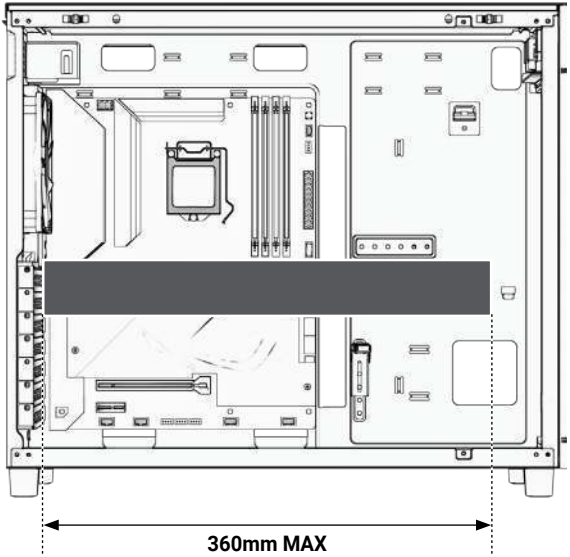

Graphics Card Placement Options

顯示卡替代放置 | 显卡放置位置 | Možnosti umístění grafické karty | Options de positionnement de la carte graphique | Platzierungsoptionen für Grafikkarten | Opzioni di installazione della scheda grafica | グラフィックスカードの設置方法る | 그래픽 카드 배치 옵션 | Opcje montażu karty graficznej | Opções de colocação da placa gráfica | Варианты размещения видеокарты | Opciones de ubicación de la tarjeta gráfica | Placeringsalternativ för grafikkort | Grafik Kartı Yerleştirme Seçenekleri | Možnosti umiestnenia grafickej karty | خيارات وضع بطاقة الرسومات | אפשרויות התקנה לכרטיס מסך

1

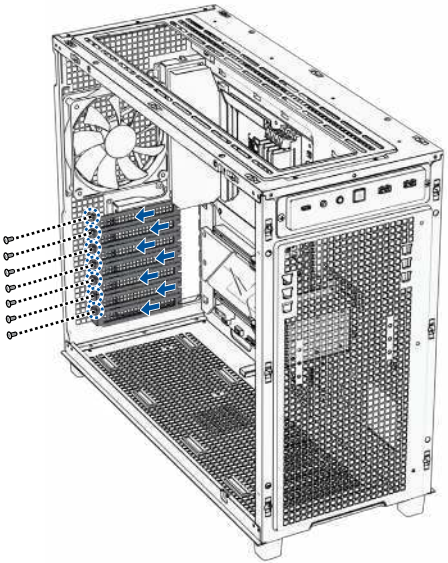

2

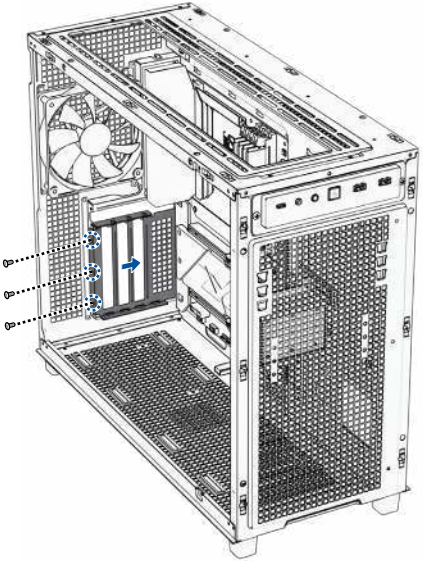

3

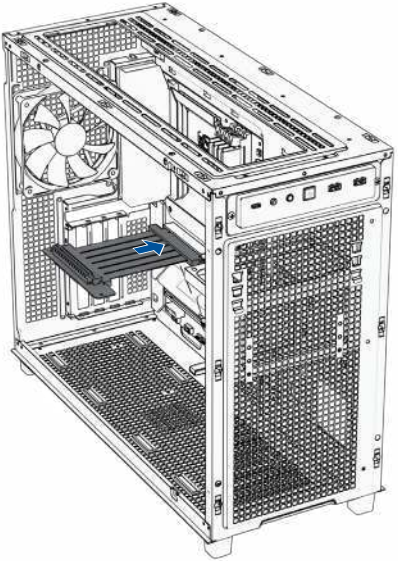

*** Requires riser cable (not included)**

4

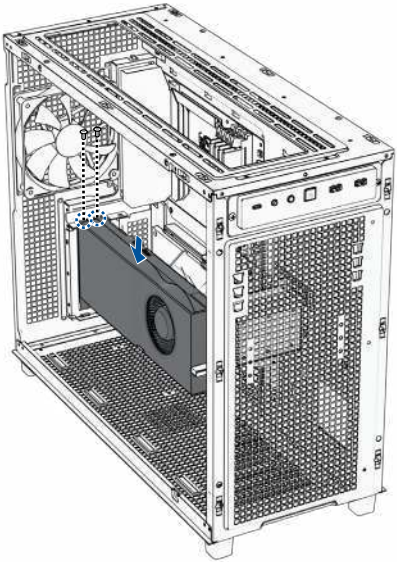

*** Requires riser cable (not included)**

5

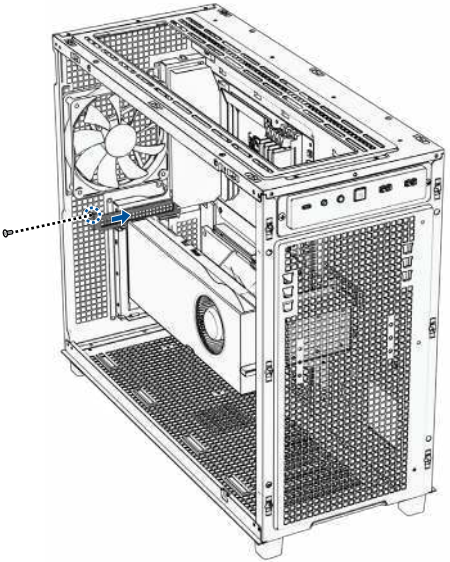

Fan Setup Compatibility

風扇設定相容性 | 风扇设置兼容性 | Kompatibilita nastavení ventilátoru | Compatibilité de configuration du ventilateur | Kompatibilität der Lüftereinrichtung | Specifiche di installazione per le ventole | ファンの取り付け例 | 팬 설치 호환성 | Zgodność instalacji wentylatora | Compatibilidade de ventiladores | Совместимость устанавливаемого вентилятора | Compatibilidad de la configuración del ventilador | Kompatibilitet för fläktsinstallation | Fan Kurulumu Uyumluluğu | توافق إعداد المروحة | מערכי מאווררים אפשריים

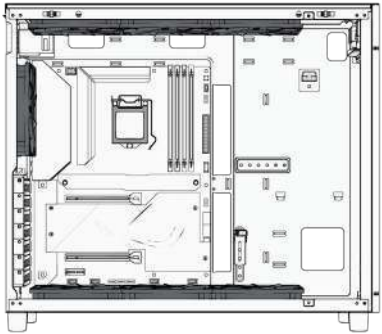

120mm x 7

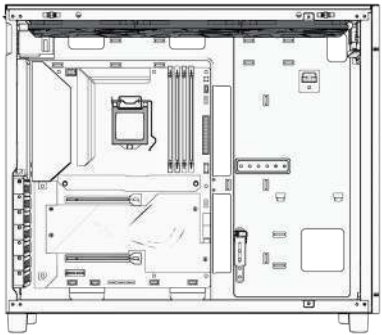

140mm x 3

Water-cooling Radiator Options

水冷散熱系統選項 | 水冷散热系统选项 | Možnosti chladiče vodního chlazení | Options de radiateur à refroidissement par eau | Optionen der Wasserkühlung | Opzioni per radiatore raffreddamento a liquido | 水冷ラジエーターの制限 | 수냉식 라디에이터 옵션 | Opcje instalacji radiatora chłodzonego wodą | Opções de radiadores de refrigeração a água | Варианты радиатора для водяного охлаждения | Opciones del radiador de refrigeración por agua | Alternativ för vattenkylningselement | Su Soğutma Radyatörü Seçenekleri | خيارات راديانير تبريد الماء | אפשרויות התקנה לרדיאטורים

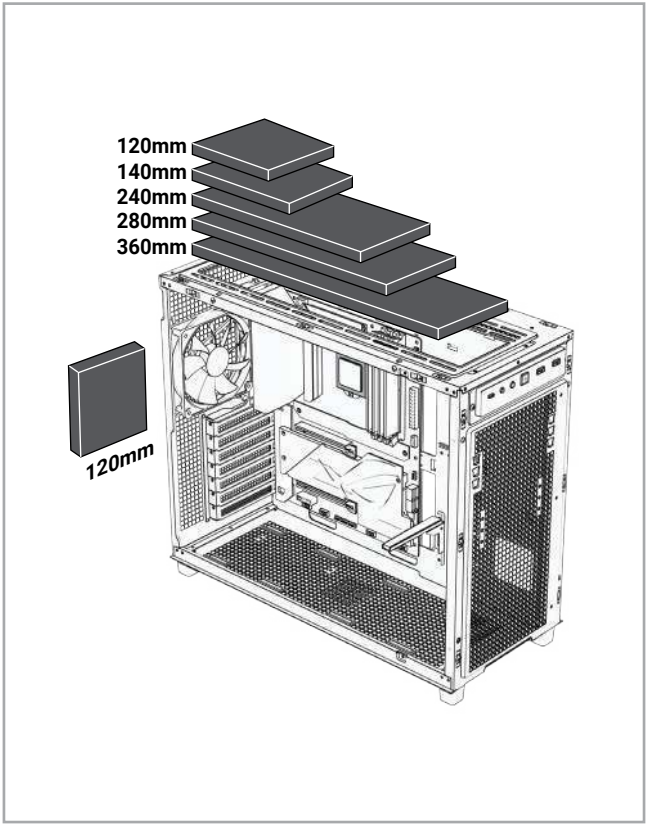

Water-cooling Setup Compatibility

水冷散熱系統設定相容性 | 水冷散热系统设置兼容性 | Kompatibilita nastavení vodního chlazení | Compatibilité de configuration du refroidissement par eau | Kompatibilität der Wasserkühlungseinrichtung | Specifiche di installazione raffreddamento a liquido | ラジエーターとファンの制限 | 수냉식 설치 호환성 | Zgodność instalacji chłodzenia wodą | Compatibilidade de radiadores de refrigeração a água | Совместимость с водяным охлаждением | Compatibilidad de la configuración de refrigeración por agua | Kompatibiltet för vattenkylningsinstallation | Su Soğutma Kurulumu Uyumluluğu | Kompatibilita inštalácie chladenia vodou | מערכי קירור נוזלי מתאימים | توافق إعداد تبريد المياه

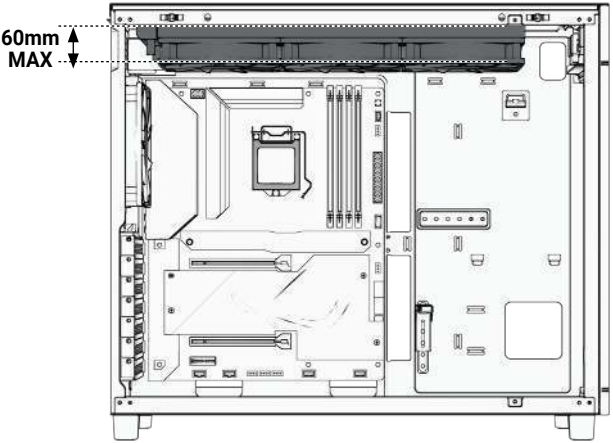

Safety Information

安規資訊 | 安规信息 | Bezpečnostní informace | Informations relatives à la sécurité | Sicherheitsinformationen | Informazioni sulla sicurezza | 製品の安全性に関する情報 | 안전 정보 | Informacje dotyczące bezpieczeństwa | Informações de segurança | Информация о правилах безопасности | Información de seguridad | Säkerhetsinformation | Güvenlik Bilgileri | معلومات السلامة | מידע בטיחותי

Safety Precautions

Accessories that came with this product have been designed and verified for the use in connection with this product. Never use accessories for other products to prevent the risk of electric shock or fire.

安全上のご注意

付属品は当該専用品です。他の機器には使用しないでください。機器の破損もしくは、火災や感電の原因となることがあります。

Declaration of compliance for product environmental regulation

ASUS follows the green design concept to design and manufacture our products, and makes sure that each stage of the product life cycle of ASUS product is in line with global environmental regulations. In addition, ASUS disclose the relevant information based on regulation requirements. Please refer to https://esg.asus.com/Compliance.htm for information disclosure based on regulation requirements ASUS is complied with:

EU RoHS

This product complies with the EU RoHS Directive. For more details, see https://esg.asus.com/Compliance.htm

India RoHS

This product complies with the "India E-Waste (Management) Rules, 2016" and prohibits use of lead, mercury, hexavalent chromium, polybrominated biphenyls (PBBs) and polybrominated diphenyl ethers (PBDEs) in concentrations exceeding 0.1% by weight in homogenous materials and 0.01% by weight in homogenous materials for cadmium, except for the exemptions listed in Schedule II of the Rule.

Vietnam RoHS

ASUS products sold in Vietnam, on or after September 23, 2011,meet the requirements of the Vietnam Circular 30/2011/TT-BCT.
Các sản phẩm ASUS bán tại Việt Nam, vào ngày 23 tháng 9 năm2011 trở về sau, đều phải đáp ứng các yêu cầu của Thông tư 30/2011/TT-BCT của Việt Nam.

Türkiye RoHS

AEEE Yönetmeliğine Uygundur

ASUS Recycling/Takeback Services

ASUS recycling and takeback programs come from our commitment to the highest standards for protecting our environment. We believe in providing solutions for you to be able to responsibly recycle our products, batteries, other components as well as the packaging materials. Please go to https://esg.asus.com/en/Takeback.htm for detailed recycling information in different regions.

Australia statement notice

From 1 January 2012 updated warranties apply to all ASUS products, consistent with the Australian Consumer Law. For the latest product warranty details please visit https://www.asus.com/support/. Our goods come with guarantees that cannot be excluded under the Australian Consumer Law. You are entitled to a replacement or refund for a major failure and compensation for any other reasonably foreseeable loss or damage. You are also entitled to have the goods repaired or replaced if the goods fail to be of acceptable quality and the failure does not amount to a major failure.
If you require assistance please call ASUS Customer Service 1300 2787 88 or visit us at https://www.asus.com/support/.

REACH

Complying with the REACH (Registration, Evaluation, Authorisation, and Restriction of Chemicals) regulatory framework, we published the chemical substances in our products at ASUS REACH website at https://esg.asus.com/Compliance.htm. (English)

謹遵守REACH(Registration, Evaluation, Authorisation, and Restriction of Chemicals)管理規範，我們會將產品中的化學物質公告在華碩REACH網站，詳細請參考https://esg.asus.com/Compliance.htm. (繁體中文)

谨遵守REACH(Registration, Evaluation, Authorisation, and Restriction of Chemicals)管理规范，我们会将产品中的化学物质公告在华硕REACH网站，详细请参考https://esg.asus.com/Compliance.htm. (简体中文)

V rámci shody s regulatorní platformou REACH (Registration, Evaluation, Authorisation, and Restriction of Chemicals (registrace, hodnocení, povolování a omezování chemických látek)) byl zveřejněn seznam chemických látek přítomných v našich produktech na webu ASUS REACH na adrese https://esg.asus.com/Compliance.htm. (Čeština)

Conforme avec le Règlement REACH (Enregistrement, Évaluation, Autorisation et Restriction des produits chimiques), nous avons publié la liste des substances chimiques utilisées dans nos produits sur le site Web ASUS REACH à l'adresse https://esg.asus.com/Compliance.htm. (Français)

Die rechtliche Rahmenbedingungen für REACH (Registration, Evaluation, Authorisation, and Restriction of Chemicals) erfüllend, veröffentlichen wir die chemischen Substanzen in unseren Produkten auf unserer ASUS REACH-Webseite unter https://esg.asus.com/Compliance.htm. (Deutsch)

Nel rispetto del regolamento REACH (Registration, Evaluation, Authorisation, and Restriction of Chemicals), le sostanze chimiche contenute nei prodotti ASUS sono state pubblicate nel sito web ASUS, alla pagina: https://esg.asus.com/Compliance.htm. (Italiano)

REACH (Registration, Evaluation, Authorisation, and Restriction of Chemicals)規則の基準を満たすため、ASUSはREACH専用サイトで弊社製品に含まれる化学物質を公開しております。https://esg.asus.com/Compliance.htm. (日本語)

REACH (Registration, Evaluation, Authorisation, and Restriction of Chemicals) 등록, 평가, 승인 및 화학물질규제) 규제 기준을 준수하여 ASUS REACH 웹사이트https://esg.asus.com/Compliance.htm 에 당사 제품에사용된 화학 물질을 게시했습니다. (한국어)

Zgodnie z rozporządzeniem REACH (Rejestracja, ocena, autoryzacja i ograniczenie środków chemicznych), publikujemy informacje o środkach chemicznych w naszych produktach, na stronie internetowej ASUS REACH pod adresem https://esg.asus.com/Compliance.htm (Polski)

Cumprindo o quadro regulamentar REACH (Registo, Avaliação, Autorização e Restrição dos Produtos Químicos), divulgamos as substâncias químicas incluídas nos nossos produtos no Web site ASUS REACH em https://esg.asus.com/Compliance.htm. (Português)

Согласно регламенту ЕС REACH (Registration, Evaluation, Authorization, and Restriction of Chemicals – Регистрация, Оценка, Разрешения и Ограничения на использование Химических веществ), на сайте ASUS REACH размещен список химических веществ содержащихся в наших продуктах: https://esg.asus.com/Compliance.htm. (Русский)

En cumplimiento del marco reglamentario REACH (registro, evaluación, autorización y restricción de productos químicos), hemos publicado las sustancias que contienen nuestros productos a través del sitio web ASUS REACH, al que puede acceder a través de la dirección https://esg.asus.com/Compliance.htm. (Español)

Uppfyller REACH (Registration, Evaluation, Authorization, and Restriction of Chemicals (Registrering, Värdering, Behörighet och Begränsning)) reglerande regelverk, vi publicerar de kemiska substanserna i våra produkter på ASUS REACH webbsida på https://esg.asus.com/Compliance.htm. (Svenska)

REACH (Kimyasalların Kayıt Altına Alınması, Değerlendirilmesi, Ruhsatlandırılması ve Sınırlandırılması) düzenleyici çerçevesine uygun olarak, ürünlerimizdeki kimyasal maddeleri https://esg.asus.com/Compliance.htm adresindeki ASUS REACH websitesinde yayınlamaktayız. (Türkçe)

امتثالا لإطار العمل التنظيمي الخاص بتسجيل المواد الكيميائية وتقييمها والتصديق عليها وتقييد استخدامها (REACH)، قمنا بنشر المواد الكيميائية المستخدمة في منتجاتنا على موقع ASUS REACH على العنوان https://esg.asus.com/Compliance.htm. (عربي)

电子电气产品有害物质限制使用标识：图中之数字为产品之环保使用期限。仅指电子电气产品中含有的有害物质不致发生外泄或突变，从而对环境造成污染或对人身、财产造成严重损害的期限。

有害物质名称及含量说明标示：

部件名称	有害物质									
	铅 (Pb)	汞 (Hg)	镉 (Cd)	六价铬 (Cr(VI))	多溴联苯 (PBB)	多溴二苯醚 (PBDE)	邻苯二甲酸二异丁酯 (DIBP)	邻苯二甲酸 (2-乙基己基酯) (DEHP)	邻苯二甲酸二丁酯 (DBP)	邻苯二甲酸丁苄酯 (BBP)
机箱	○	○	○	○	○	○	○	○	○	○
面板	○	○	○	○	○	○	○	○	○	○
I/O模	○	○	○	○	○	○	○	○	○	○
风扇	○	○	○	○	○	○	○	○	○	○
零件包	○	○	○	○	○	○	○	○	○	○

本表格依据 SJ/T 11364 的规定编制。

○：表示该有害物质在该部件所有均质材料中的含量均在 GB/T 26572 规定的限量要求以下。

×：表示该有害物质至少在该部件的某一均质材料中的含量超出 GB/T 26572 规定的限量要求，然该部件仍符合欧盟指令 2011/65/EU 的规范。

备注：此产品所标示之环保使用期限，系指在一般正常使用状况下。

France sorting and recycling information

Points de collecte sur www.quefairedemesdechets.fr
Privilégiez la réparation ou le don de votre appareil !

ASUS

IN SEARCH OF INCREDIBLE